INDRADHANUSH GAS GRID LIMITED
(Joint Venture of IOCL, ONGC, GAIL, OIL and NRL)
GUWAHATI, ASSAM

CORRIGENDUM # 1

FOR

LAYING & CONSTRUCTION OF STEEL GAS PIPELINE AND TERMINALS ALONG WITH ASSOCIATED FACILITIES FOR NORTH EAST GAS GRID (NEGG) PIPELINE SECTION-1 & 2

OPEN DOMESTIC COMPETITIVE BIDDING

Tender no.: 05/51/23UU/IGGL/001-i-1

Visit: www.tenderwizard.com/MECON
(**Tenderwizard helpdesk:** 011-49424365)

PREPARED AND ISSUED BY

MECON LIMITED
(A Govt. of India Undertaking)
Delhi, India

IGGL	CORRIGENDUM # 1 LAYING & CONSTRUCTION OF STEEL GAS PIPELINE AND TERMINALS ALONG WITH ASSOCIATED FACILITIES FOR NORTH EAST GAS GRID (NEGG) PIPELINE SECTION-1 & 2 Tender no. : 05/51/23UU/IGGL/001-i-1	MECON LIMITED
		Dated : 24.09.2020

Sl. No.	Description	Volume	Page No.	Clause / Para / Section	Amendment / Addition / Modification / Deletion	
1	LR Bend Specification	Volume II of IV	-	Technical Specifications for Mechanical Works	Addition	Technical specification no. MEC/TS/05/62/015 is added as **Annexure-1 to this corrigendum**
2	LR bend Datasheet	Volume I of IV	-	Particular Job Specification	Addition	Data sheet no.MEC/23UU/05/28/M/001/DS-015 has been added as **Annexure-2 to this Corrigendum.**
3	P&IDs	Volume III of IV	-	P&IDs	Modification	Modified P&IDs are attached as **Annexure-3 to this Corrigendum**.
4	Conditions for Isuue & Reconciliation of Material	Volume I of IV	321	Clause no. 5 of Annexure -8 to SCC	Addition	Following is added to clause no. 5.0 'Line Pipes': 5.3 Reconciliation of Line Pipe issued to contractor on account of fabrication of LR bends shall be dealt separately. Justification/calculation of scrap and other wastage shall be submitted to EIC for their review and further clearance. If Scrap/wastage generated by the Contractor found in excess with respect to approved justification/calculation, penal rates shall be charged for excess scrap/wastage inline with the provision of contract.

All other terms & conditions of tender document remain unaltered.

TECHNICAL SPECIFICATION OF LR BEND

PROCESS & PIPING DESIGN SECTION
MECON LIMITED
DELHI - 110 092

TECHNICAL SPECIFICATION
FOR
LONG RADIUS BENDS

SPECIFICATION NO. : MEC/TS/05/62/015, Rev-1

CONTENTS

Revision No.	Date	Revised by	Checked by	Approved by

PREPARED BY :	CHECKED BY :	APPROVED BY :

1.0 SCOPE

This specification covers long radius steel pipe bends to be manufactured in accordance with the requirements of MSS-SP (Manufacturers Standardisation Society – Standard Practice) – 75, latest edition, to be used in pipeline system handling Natural Gas. The selection of options permitted by MSS-SP-75 shall be as described below. All applicable requirements contained in the MSS-SP-75 shall be fully valid unless cancelled, replaced or amended by more requirements as stated in this specification. In case of conflict between the requirements of this specification and MSS-SP-75, the requirements of this specification shall govern.

2.0 REFERENCE DOCUMENTS

Reference has also been made in this specification to the latest edition of the following codes, standards and specifications.

a) ANSI B31.8 : Gas Transmission and Distribution Piping System.

b) ASME – Sec. VIII Div. 1 : Boiler and Pressure Vessel Code

c) ASME – Sec IX : Boiler & Pressure Vessel Code Welding and Brazing Qualifications

d) API Spec. 5L : Line Pipe

e) ASTM Part-I : Steel – Piping, Tubing, Fittings

In case of conflict between the above reference documents and this specification, the requirements of the specification shall prevail.

3.0 MATERIALS

3.1 Bends shall be fabricated from bare steel line pipe (to be issued as free issue item by Purchaser). The details of free issue line pipe material is given separately in LR Bend Data Sheet & Purchase Requisition.

3.2 All mechanical properties of the bends after finishing shall be same as pipe specification as referred in section 3.1. The following tests shall be conducted on finished bends and test procedures shall be as per pipe specification as referred in para 3.1.

3.2.1 One transverse tensile test will be conducted to establish the yield strength, ultimate tensile strength and elongation of :

a) Base material at inside radius of the bend.
b) Base material at outside radius of the bend.

3.2.2 One all weld tensile test will be conducted (wherever applicable) to establish yield strength, ultimate tensile strength and elongation of weld material on bend.

3.2.3 Three transverse Charpy-V-notch impact tests shall be conducted on full sized specimen of the same heat in accordance with ASTM A370 at 0°C for each of the following :

a) Base material at outside radius of the bend.
b) Weld material of bend

3.2.4 **Guided Bend Tests**

One face and one root guided bend weld test shall be performed on samples cut from one bend per heat of steel. The dimensions `A' in guided bend test shall not exceed 4.0 times the nominal wall thickness and dimension `B' shall be equal to A + 2t + 3.2mm.

4.0 MANUFACTURE

4.1 Bends shall be manufactured by hot bending of pipe applying induction heating only.

The adopted procedure shall be completed by suitable heat treatment to achieve the required mechanical and chemical properties of the finished bends and is accepted only after written approval of the Purchaser. The procedure shall ensure uniform bending without any defects other than those allowed in this specification and pipe specification as referred in para 3.1.

4.2 When bending, the weld wherever applicable shall be located at approx. 10° from the neutral zone, measured at outside of the bend as indicated in figure below.

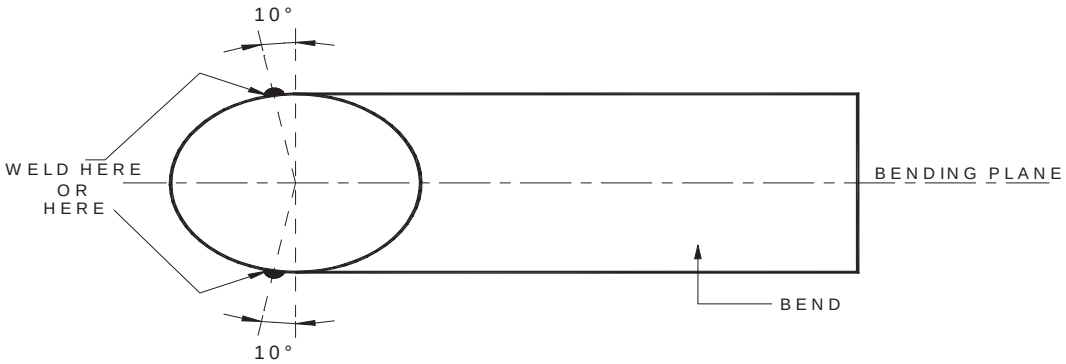

4.3 Bevels at the ends shall be as specified in MSS-SP-75 unless otherwise specified differently in the material/ purchase requisition.

4.4 Bends shall not have any circumferential joint.

4.5 No repair by welding is allowed on any part of the bends.

4.6 The cooling of the bend immediately after bending shall be an interval cooling, alternatively with water and air at a minimum pressure of 2 atmospheres.

4.7 The procedure shall be such which shall not require any additional heat – treatment after bending. If such a heat treatment is required, it is permitted only after the written approval of purchaser and shall be carried out at Manufacturer's expense.

4.8 Bulges, dents and flat areas shall not appear within 100mm from end of the bend.

For the remaining part of the bend these deviations from the original contour of the pipe are permitted but the same shall be repaired, provided these deviations shall not exceed 6.5% of nominal wall thickness in height/ depth and the same shall not extend (in any direction) over a distance of more than 25% of nominal diameter.

4.9 The excess weld material wherever applicable at the inside of the bend shall be removed over a distance of 100mm at both ends.

4.10 **Tolerances**

The dimensions of bends shall be controlled to make sure that they are manufactured according to the tolerances indicated below over and above the requirements of MSS-SP-75

4.10.1 Minimum Inside Diameter : -2.5% of inside nominal diameter except 200mm from ends

Bend Angle : ±1°

Bend Radius : ± 1% of bending nominal Diameter

4.10.2 The manufacturer shall check the wall thickness of the pipe before and after bending along the outside radius either at distances approximately equal to pipe diameter or 300mm whichever is less. The measured wall thickness shall be atleast equal to :

tmin = 0.95 (tnom. $\triangle$ t)

tnom = nominal wall thickness as specified in the material/ purchase requisition.

$\triangle$ t = 0.35mm for a wall thickness smaller than 10mm.

$\triangle$ t = 0.50mm for a wall thickness 10mm or more.

4.10.3 Ovality may be defined as :

$$\frac{\text{OD max.} - \text{OD min}}{\text{OD nom.}}$$

The above value shall be < 1% within 100mm from each end and < 6% for remaining part of the bend. The measurement shall be made over the circumference of the bend either at distance approximately equal to pipe diameter or 300mm whichever is less.

4.10.4 **Wrinkles**

Measurements of the outside diameter shall be taken in the plane of the bend at locations where wrinkles are present (OD max.) and at locations where wrinkles are not present (OD min,). The acceptance limit shall be as defined below.

$$\frac{\text{OD max.} - \text{OD min}}{\text{OD nom.}} < 1\%$$

5.0 INSPECTION AND TESTS

5.1 The manufacturer shall perform all inspection and tests as per the requirements of this specification and MSS-SP-75 prior to shipment at his works. Such inspection and tests shall be, but not limited to, the following :

a) Verify that the unfinished product arriving at manufacturer's shop is in full compliance with the pipe specification as referred in para 3.1.
b) Visual Inspection.
c) Dimensional and tolerances check as per MSS-SP-75 and requirements of section 4.0 of this specification.
d) Check heat treatment, if carried out, as required and maintain its records.
e) Temperature against time recorder charts for each induction heating.
f) Material properties shall be checked to meet the requirements of section 3.0 of this specification.
g) The non-destructive inspection on the finished bend shall be carried out as given below :

- All longitudinal seam welds shall be fully radiographed and acceptance limits shall be as per pipe specification as referred in para 3.1.
- The full circumference of both ends of each bend after bevelling shall be ultrasonically tested for laminations over a length of 25mm and acceptance limits shall be as per pipe specification as referred in para 3.1.

5.2 Purchaser's Representative reserves the right to perform stagewise inspection and witness tests on all bends as indicated in para 5.1 at Manufacturer's works, prior to shipment.

Manufacturer shall give reasonable notice of time and shall provide without charge reasonable access and facilities required for inspection, to the Purchaser's Representative. Inspection and test performed or witnessed by Purchaser's Representative shall in no way relieve the Manufacturer's obligation to perform the required inspection and tests. Under no circumstances any action of the Purchaser's Representative shall relieve the Manufacturer of his responsibility for the material, design, quality and operation of the equipment.

5.3 **Test Certificates**

The Manufacturer shall produce the Certificates (in original) for all, but not limited to, the following :

a) Certificates of chemical analysis and mechanical tests carried out on pipe and bends separately.

b) Certificates of required non-destructive test inspection.

c) Certificates of heat treatments, if any.

d) Certificates of all other tests as required in this specification.

In case any of the above said certificates are not available during the final inspection, the supply shall be considered incomplete.

6.0 **MARKING, PACKING AND SHIPMENT**

6.1 All bends shall be marked as per MSS-SP-75.

6.2 All loose and foreign material i.e. rust, grease, etc. shall be removed from inside and outside of the bends.

6.3 All bends except bevelled ends shall be coated internally and externally with a thin film of zinc chromate red oxide paint for protection against corrosion during transit and storage. The coating shall be easily removable in the field. Manufacturer shall furnish the details for the same.

6.4 Both ends of all bends shall be suitably protected to avoid any damage during transit by means of metallic bevel protectors.

6.5 Package shall be marked legibly with suitable marking to indicate the following:

a) Order Number
b) Package Number
c) Manufacturer's Name
d) Size (Inches) and wall thickness (mm)

7.0 WARRANTY

Purchaser will be reimbursed by Manufacturer for any bend furnished on this order that fails under field hydrostatic test if such failure is caused by a defect in the bend which is outside the acceptance limits of this specification. The reimbursement cost shall include bend cost, labour cost and equipment rental for searching, excavation, cutting out and installation of replaced bend in position. The field hydrostatic test pressure will not exceed that value which will cause a calculated hoop stress equivalent to 100% of specified minimum yield strength of the attached pipe.

8.0 DOCUMENTATION

8.1 All documents shall be in English language.

8.2 At the time of bidding, bidder shall submit the following documents :

a) Reference list of previous supplies of bends of similar specifications.

b) Clause-wise list of deviation from this specification, if any.

c) Brief description of manufacturing and quality control facilities of the Manufacturer's works.

8.3 Within one week of placement of order the Manufacturer shall submit four copies, of the manufacturing process and quality assurance plan for pipe and bends.

Once the approval has been given by Purchaser any change in material and method of manufacture and quality control shall be notified to Purchaser whose approval in writing of all such changes shall be obtained before the bends are manufactured.

8.4 Within four weeks from the approval date Manufacturer shall submit one reproducible and six copies of the documents as stated in para 8.3 of this specification.

8.5 Prior to shipment, the Manufacturer shall submit one reproducible and six copies of test certificates as listed in para 5.3 of this specification.

DATA SHEETS OF LR BEND

DATA SHEET FOR LONG RADIUS BENDS

1)	LR BEND MFR.	
2)	PURCHASER SPECIFICATION NO.	MEC/TS/05/21/015 Rev 0
3)	MANUFACTURING CODE	MSS-SP-75
4)	DIMENSIONAL TESTING	REQUIRED AS PER SPEC.
5)	DESTRUCTIVE TESTING (TENSILE / CHARPY /HARDNESS)	Charpy V-Notch Test required at temp. 0 ^{0}C for set of three transverse specimen. Value shall be Minimum Avg. - 60J, Individual Minimum - 48J
		YS: 485 - 605 MPa, TS: 570 - 760 MPa YS/TS = 0.90 Maximum, Elongation - 20% Minimum
		Hardness Value shall be 248 HV_{10} Maximum
6)	NON-DESTRUCTUVE TESTING	Required as per Mecon's Technical Specification no. MEC/TS/05/21/012, MEC/TS/05/21/012A, MEC/TS/05/21/012B (As applicable)
7)	PIGGING	Required as per Note-3 below
8)	HYDROSTATIC TEST PRESSURE (For PQT Bend)	235 Kg/cm2 (for 17.48 mm WT Pipe) 190 Kg/cm2 (for 14.27 mm WT Pipe)

Note: All the inspection & tests shall be performed as per Tech. Spec. & QAP attached with the tender.

TABLE-I

Sl. No.	Details of free issue P/L material			Bend Radius (R)	End Type	Qty. (Nos.)	Angle	Straight Length after curvature (mm)
	NB	Thk. mm	Material					
1	24"	17.48 mm	API 5L Gr X -70	6D*	PE	Note-2		500
2	24"	14.27 mm	API 5L Gr X -70	6D*	PE	Note-2		500

*

BE = "D" - denotes nominal dia. of pipe

@ = Bevel End

= Vendor to indicate

= Straight length after curvature will be minimum 500mm.

Note:

1) Test Bend shall be of 90°
2) Quantity & angles of LR Bends shall be finalized during detailed engineering activities
3) A check shall be performed on each bend by passing gauging pig consisting of two discs having a diameter equal to 95% of the nominal internal diameter of the pipe, connected rigidly together at a distance equal to 500mm. Details of the gauging pig, including its dimensions shall be approved by Purchaser.
4) Out of Roundness shall not exceed 2% of nominal OD
5) Tolerance in Bend Angle shall be ± 0.5° of the specified angle
6) Tolerance in Bend Radius shall be ±1% of the nominal bending radius.
7) Bend off-plane shall be maximum (θ/90) x 10 mm, where θ = Bend angle

REV. NO.	DATE	ZONE	DESCRIPTIONS	BY	APPRD	REFERENCES	DRG. NO.
SECTION: OIL&GAS			REVISIONS				

DSGN	NAME	DATE	CHKD	DATE
DRWN	Sachin	21.09.2020	Harsh	21.09.2020
APPROVED				I Sen Sr. GM

CLIENT : IGGL

PROJECT : NEGGL

DATA SHEET FOR LONG RADIUS BENDS

MECON LIMITED

SCALE :

DATA SHEET NO.: MEC/23UU/05/28/M/001/DS-015

REV 0

DATA SHEET FOR LONG RADIUS BENDS

1)	LR BEND MFR.	
2)	PURCHASER SPECIFICATION NO.	MEC/TS/05/21/015 Rev 0
3)	MANUFACTURING CODE	MSS-SP-75
4)	DIMENSIONAL TESTING	REQUIRED AS PER SPEC.
5)	DESTRUCTIVE TESTING (TENSILE / CHARPY /HARDNESS)	Charpy V-Notch Test required at temp. 0 ^{0}C for set of three transverse specimen. Value shall be Minimum Avg. - 40J, Individual Minimum - 32J
		YS: 390 - 515 MPa, TS: 490 - 760 MPa YS/TS = 0.90 Maximum, Elongation - 20% Minimum
		Hardness Value shall be 248 HV_{10} Maximum
6)	NON-DESTRUCTUVE TESTING	Required as per Mecon's Technical Specification no. MEC/TS/05/21/012, MEC/TS/05/21/012A (As applicable)
7)	PIGGING	Required as per Note-3 below
8)	HYDROSTATIC TEST PRESSURE (For PQT Bend)	233 Kg/cm2

Note: All the inspection & tests shall be performed as per Tech. Spec. & QAP attached with the tender.

TABLE-I

Sl. No.	Details of free issue P/L material			Bend Radius (R)	End Type	Qty. (Nos.)	Angle	Straight Length after curvature (mm)
	NB	Thk. mm	Material					
1	8"	7.92 mm	API 5L Gr X -56	6D*	PE	Note-2		500

*

BE = "D" - denotes nominal dia. of pipe

@ = Bevel End

= Vendor to indicate

= Straight length after curvature will be minimum 500mm.

Note:

1) Test Bend shall be of 90°
2) Quantity & angles of LR Bends shall be finalized during detailed engineering activities
3) A check shall be performed on each bend by passing gauging pig consisting of two discs having a diameter equal to 95% of the nominal internal diameter of the pipe, connected rigidly together at a distance equal to 500mm. Details of the gauging pig, including its dimensions shall be approved by Purchaser.
4) Out of Roundness shall not exceed 2% of nominal OD
5) Tolerance in Bend Angle shall be ± 0.5° of the specified angle
6) Tolerance in Bend Radius shall be ±1% of the nominal bending radius.
7) Bend off-plane shall be maximum (θ/90) x 10 mm, where θ = Bend angle

REV. NO.					APPRD		
	DATE	ZONE	DESCRIPTIONS	BY		REFERENCES	DRG. NO.
SECTION: OIL&GAS			REVISIONS				
				CLIENT :	IGGL		MECON LIMITED
DSGN	NAME	DATE	CHKD	DATE			
DRWN	Sachin	21.09.2020	Harsh	21.09.2020	PROJECT : NEGGL		
						SCALE :	REV
APPROVED				I Sen Sr. GM	DATA SHEET FOR LONG RADIUS BENDS	DATA SHEET NO.: MEC/23UU/05/28/M/002/DS-015	0

P&ID

P&ID

GUWAHATI- NUMALIGARH (PIPELINE SECTION-1)

DRG. NO. MEC/23UU/05/28/M/000/0001

SYMBOLS & ABBREVIATIONS

SYMBOLS

- VP–PLUG VALVE
- VB–BALL VALVE WELDED END
- VB–BALL VALVE FLANGED END
- GATE VALVE
- GV–GLOBE VALVE
- PRESSURE RELIEF OR SAFETY VALVE (PSV)
- PRESSURE REGULATING VALVE (PCV) (SELF ACTUATING TYPE)
- NON RETURN VALVE
- CONTROL VALVE WITH SLAM SHUT–OFF VALVE
- SOLENOID VALVE
- GAS ACTUATED ISOLATION VALVE
- GAS ACTUATED ISOLATION VALVE WITH HANDWHEEL
- REDUCER
- FLANGE
- FLAME ARRESTOR (FA)
- RTU — REMOTE TERMINAL UNIT
- DIAPHRAM
- XXLS — PIG SIGNALLER
- VENT
- SPECTACLE BLIND

SYMBOLS

- PD METER
- TURBINE METER
- INSULATION JOINT (IJ)
- FLOW TEE (FWT)
- FIELD MOUNTED INSTRUMENT
- CONTROL PANEL MOUNTED INSTRUMENT
- ULTRASONIC METER
- SCADA INDICATOR, CONTROLLER OR OTHER DEVICES WITH OPERATOR ACCESS TO ADJUSTMENT.

ABBREVIATIONS

AE	ANALYZER SENSOR (GAS CHROMATOGRAPH)
AI	ANALYZER INDICATOR
AT	ANALYZER TRANSMITTER
FY	FLOW COMPUTER
FQI	FLOW TOTALIZER & INDICATOR
LG	LEVEL GAUGE
ZSH/ZSL	LIMIT SWITCHES (OPEN/CLOSE)
TI/TG	TEMPERATURE INDICATOR/ GAUGE
TE	TEMPERATURE ELEMENT
TW	THERMOWELL
DPI/DPG	DIFF. PRESSURE INDICATOR/ GAUGE
DPT	DIFF. PRESSURE TRANSMITTER
PI/PG	PRESSURE INDICATOR/ GAUGE
PT	PRESSURE TRANSMITTER
FC/FO	FAILURE TO CLOSE/OPEN
LO	LOCK OPEN
FIC/PIC	FLOW/PRESS. INDICATING CONTROLLER
I	INTERLOCK
XRL	LOCAL/REMOTE INDICATION
XSL	LOCAL/REMOTE SWITCH
HSH	HAND SWITCH HIGH
HSL	HAND SWITCH LOW
FT	FLOW TRANSMITTER
FE	FLOW ELEMENT
Q.O.E.C.	QUICK OPENING END CLOSURE

ABBREVIATIONS

TT	TEMP TRANSMITTER
FR	FLOW RECORDER
PIR	PRESSURE IND.RECORDER
TIR	TEMP. IND. RECORDER
PSH	PRESSURE SWITCH HIGH
PSL	PRESSURE SWITCH LOW
LSH	LEVEL SWITCH HIGH
LSL	LEVEL SWITCH LOW
LAH	LEVEL ALARM HIGH
LAL	LEVEL ALARM LOW
D	CONDENSATE DRAIN
A1A/B1A	150#/300# RATING
C1A/D1A	400#/600# RATING
LX/PX	PNEUMATIC/ ELECTRIC SIGNAL TRANSMITTER
FB	FULL BORE
SP	SAMPLER
NG	NATURAL GAS
V	VENT
AS	AUTO SAMPLER
CP	CORROSION PROBE
CC	CORROSION COUPON
AV	ACTUATED VALVE
SDV	SHUT DOWN VALVE
LV	LEVEL CONTROL VALVE
PV/PCV	PRESSURE CONTROL VALVE
FCV	FLOW CONTROL VALVE

00”–FLUID–00–00–A1A/B1A/C1A/D1A/D4A

- MATERIAL SPEC.
- LINE NO.
- UNIT NO.
- (P–NATURAL GAS)
- LINE SIZE (NOMINAL)

INDRADHANUSH GAS GRID LIMITED

मेकॉन लिमिटेड

MECON LIMITED

SECTION	OIL & GAS
LOCATION	DELHI
DESIGNED	
DRAWN	SUNIL
CHECKED AND VERIFIED	
APPROVED	SIG
	DATE

NORTH EAST GAS GRID (PHASE–1 P/L SECTION)

LEGEND / DRAWING SYMBOLS

SCALE : NTS | SHEET 1 OF 2 | REV 0

DRG. NO. MEC/23UU/05/28/M/000/0001

SECTION–1

REV	INST.
SEC	CONCURRED BY

REV.NO	DATE	ZONE	DESCRIPTION	BY	VERIFIED
			REVISION		

REFERENCES | DRG.NO.

DRG. NO. MEC/23UU/05/28/M/000/0001

SYMBOLS & ABBREVIATIONS

SYMBOLS

- SHUT-OFF VALVE, GENERAL
- SAFETY SHUT-OFF VALVE
- CONTINIUOUS-ACTION VALVE
- RIGHT-ANGLE SHUT-OFF VALVE, GENERAL
- THREE-WAY VALVE, GENERAL
- FOUR-WAY VALVE, GENERAL
- NEEDLE VALVE
- PUSHBUTTON VALVE
- CHECK VALVE (SPRING TYPE)
- NON RETURN VALVE (SWING TYPE)
- BUTTERFLY VALVE
- CONTINUOUSLY VARIABLE BORE BUTTERFLY VALVE
- LOUVRE
- SEPERATOR GENERAL
- 2 STAGE SEPERATOR
- CYCLONE SEPERATOR
- CONDENSATE TRAP
- FLOWMETER GENERAL
- METER GENERAL
- TURBINE METER
- VORTEX-SHEDDING FLOWMETER
- DIAPHRAGM METER
- MANUALLY OPERATED ACTUATOR, GENERAL
- DIAPHRAGM ACTUATOR
- PISTON ACTUATOR
- ELECTROMAGNETIC ACTUATOR
- HYDRAULIC OR PNEUMATIC ACTUATOR, GENERAL

SYMBOLS

- SPRING-OPERATED ACTUATOR
- AUTOMATICALLY OPERATED ACTUATOR, GENERAL
- ELECTRIC MOTOR-OPERATED ACTUATOR, GENERAL
- VALVE CLOSED ON FAILURE OF ACTUATING ENERGY
- VALVE OPENED ON FAILURE OF ACTUATING ENERGY
- VALVE RETAINS POSITION ON FAILURE OF ACTUATING ENERGY
- TURBINE, GENERAL
- COMPRESSOR, GENERAL
- ROTARY PISTON COMPRESSOR
- PISTON COMPRESSOR
- JET BOOSTER
- FAN, GENERAL
- HEAT EXCHANGER WITHOUT COUNTERFLOW
- COUNTERFLOW HEAT EXCHANGER
- PLATE HEAT EXCHANGER
- FINNED HEAT EXCHANGER WITH VENTILATOR
- BLIND PLATE
- "FIGURE 8" PLATE, BLIND PLATE IN FUNCTION
- "FIGURE 8" PLATE, GOGGLE PLATE IN FUNCTION
- ORIFICE PLATE
- INSULATING FLANGE
- INSULATING COUPLING
- STRAIGHTENING VANES
- RUPTURE DISK
- SIGHT GLASS. GENRAL
- EXPANSION JOINT
- SILENCER
- PULSATION DAMPENER
- MIXING NOZZLE
- CAP
- FLANGE CONNECTION

SYMBOLS

- FILTER, GENERAL
- GAS FILTER, GENERAL
- CARTRIDGE FILTER
- GAS SORPTION FILTER
- LIQUID FILTER, GENERAL
- "Y" TYPE STRAINER
- PRESSURE REDUCING VALVE, IN AUXILIARY AND CONTRAL FACILITIES
- PRESSURE CONTROL VALVE, GENERAL
- PROCESS PRIMARY LINE
- PROCESS SECONDARY LINE
- ELECTRIC LINE
- PNEUMATIC LINE
- CAPILLARY LINE
- INSTRUMENT LINE
- HEAT TRACING LINE
- JACKETED LINE
- JACKETED & HEATED LINE
- VENT STACK
- SCRAPPER TRAP
- LIQUID PUMP GENERAL
- CENTRIFUGAL PUMP
- LIQUID RING PUMP
- PISTON PUMP
- DIAPHRAGM PUMP
- CP — CORROSION PROBE
- CC — CORROSION COUPON

ABBREVIATIONS

ESD	EMERGRNCY SHUT-DOWN
EW	DRAIN
GCV	GAS-OPERATED CONTROL VALVE
GOV	GAS-OVER OIL OPERATED VALVE
HOV	HYDRAULIC-OPERATED VALVE
LC	LOCKED CLOSED
LO	LOCKED OPEN
LP	LOCKED POSITION
LPT	LOW POINT
MCV	MOTOR CONTROL VALVE
MH	MANHOLE
MOV	MOTOR-OPERATED VALVE
SV	SOLENOID VALVE
PCV	PRESSURE CONTROL VALVE
SAV SSV	SAFETY SHUT-OFF VALVE
SBV PRV	PRESSURE RELIFE VALVE
SP	SETPOINT
TE	THERMOCOUPLE
TW	THERMOWELL
NRV	NON-RETURN VALVE
CV	CHECK VALVE
FCV	FLOW CONTROL VALVE
PGS	POWER GAS SUPPLY
IAS	INTRUMENT AIR SUPPLY
NC	NORMAL CLOSED
NO	NORMAL OPEN

INDRADHANUSH GAS GRID LIMITED

मेकॉन लिमिटेड

MECON LIMITED

SECTION	OIL & GAS
LOCATION	DELHI
DESIGNED	
DRAWN	SUNIL
CHECKED AND VERIFIED	
APPROVED	SIG
	DATE

NORTH EAST GAS GRID (PHASE-1 P/L SECTION)

LEGEND / DRAWING SYMBOLS

SCALE : NTS | SHEET 2 OF 2 | REV 0

DRG. NO. MEC/23UU/05/28/M/000/0001

SECTION-1

REV / SEC | INST. | CONCURRED BY

REV.NO	DATE	ZONE	DESCRIPTION	BY	VERIFIED
			REVISION		

REFERENCES | DRG.NO.

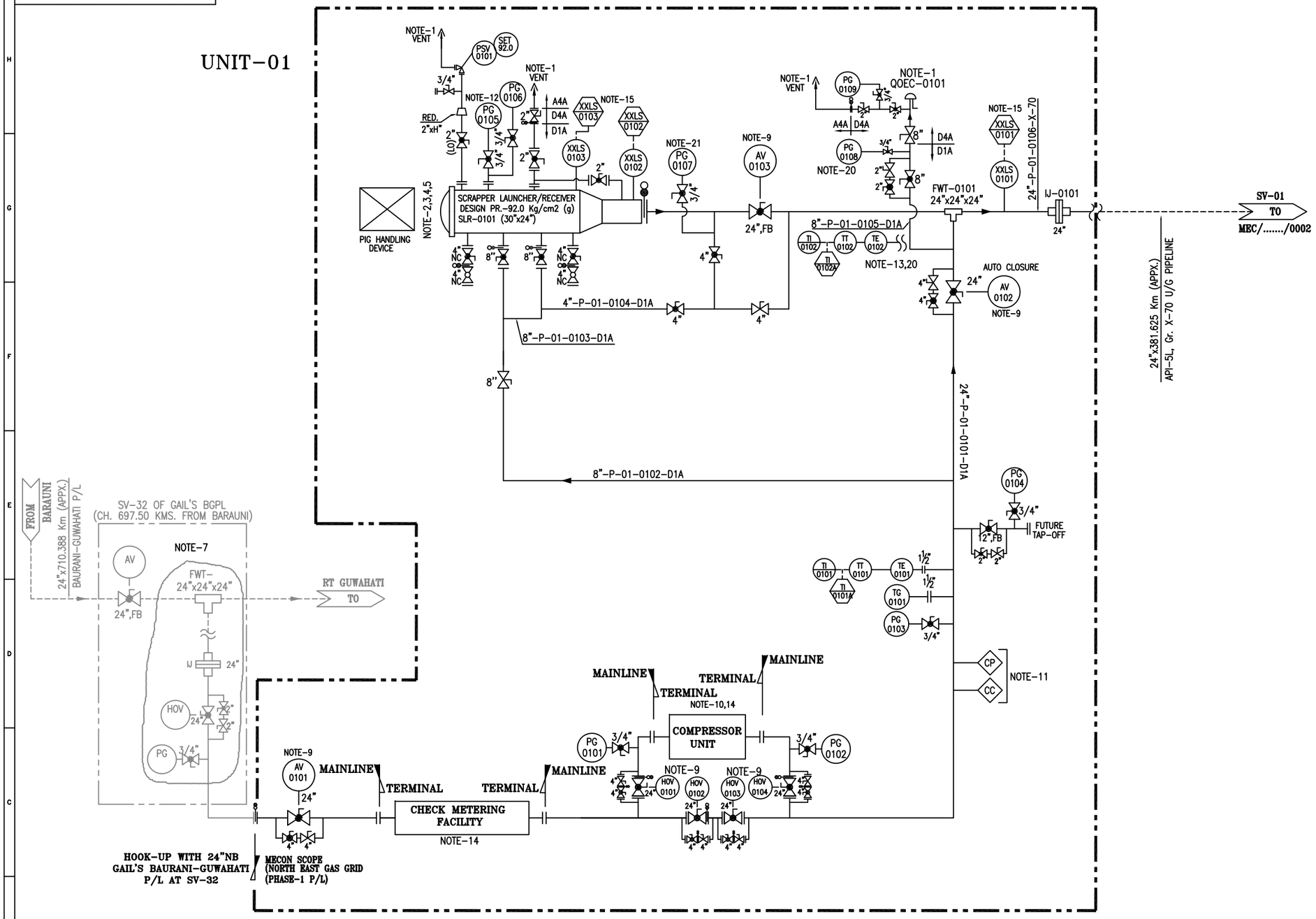

NOTES:

1. ALL VENTS SHALL BE LOCATED MIN. HEIGHT OF 3 MTR. ABOVE THE HIGHEST OPERATING LEVEL.
2. SCRAPPER LAUNCHER/RECEIVER SHALL HAVE SCRAPPER HANDLING FACILITY.
3. SCRAPPER LAUNCHER/RECEIVER SHALL BE SUITABLE FOR HANDLING INTELLIGENT PIGS.
4. SCRAPPER LAUNCHER/RECEIVER SHALL HAVE QUICK OPPENING CLOSURE.
5. SCRAPPER DOOR MECHANISM TO BE CONSTRUCTED SUCH THAT THE DOOR CAN NOT BE OPENED UNLESS SCRAPPER TRAP IS FULLY DEPRESSURISED.
6. GAS DETECTORS TO BE PROVIDED NEAR FILTERS, FLOW METERS, COMPRESSOR UNIT FACILITY & SCRAPPER TRAPS ETC. SIGNAL FROM GAS DETECTOR TO BE TAKEN IN CONTROL ROOM.
7. 24" DEDICATED TOP RECOMMENDED TO GAIL FOR IGGL PIPELINE. HOWEVER IGGL TO CONFIRM THE SAME.
8. NOTE DELETED.
9. FOR SV, HOV & AV DETAIL REFER DRG. NO. MEC/23UU/05/28/M/001/0015 & /0016
10. COMPRESSOR UNIT TO BE INSTALLED TO INCREASE THE PRESSURE AS REQUIRED PRESSURE AT NRL REFINERY IS MIN. 35 KG/CM2(G) AND GAS PRESSURE AT SOURCE POINT AT SV-32 FROM BGPL IS 30 KG/CM2(G) MIN. HOWEVER, IGGL TO CONFIRM THE SAME.
11. ONLINE RETRIVEL TYPE CORROSION MONITORING COUPON AND CORROSION PROBE SHALL BE PROVIDED. FURTHER WHEREVER SCADA SYSTEM ARE AVAILABLE, THIS SYSTEM SHALL BE ONLINE SCADA COMPATIBLE OTHERWISE DATA SHALL BE COLLECTED BY OFFLINE DATA LOGGER.
12. PG-0105 SHALL HAVE A RANGE OF 0-1 KG/CM2(G) WITH A GAUGE SAVER.
13. DIRECT SURFACE CONTACT TYPE.
14. CHECK METERING & COMPRESSOR UNIT P&ID SHALL BE PROVIDED SEPARATELY. SAME SHALL BE BI-DIRECTIONAL.
15. ALL PIG SIGNALLER SHALL BE OF NON-INTRUSIVE TYPE.
16. ALL BALL VALVES WITH BUTT WELDED END SHALL HAVE FULLY WELDED BODY.
17. ALL HIGHEST POINT & LOWEST POINT OF THE STATION PIPING SHALL BE PROVIDED WITH VENT & DRAIN FACILITY & SAME SHALL BE TAKEN CARE DURING PREPARATION OF GAD.
18. NOTE DELETED.
19. SUPPORT SHALL BE PROVIDED BEFORE & AFTER MAINLINE IJ.
20. DEPRESSURIZATION VALVE SHALL BE LOCATED IN SUCH A WAY THAT PG-0108 & TI-0102 CAN BE READ DURING VENTING. 2" VALVE ON VENT LINE OF THE QOEC LINE SHALL BE APPROCHABLE FOR OPERATION.
21. PG-0107 SHALL HAVE A RANGE OF 0-5 KG/CM2(G) WITH A GAUGE SAVER & LEAST COUNT OF 0.1 KG/CM2(G).

PROCESS DATA

FLUID: NATURAL GAS(DRY)/RLNG
FLOW: 3.75 MMSCMD (APPX.)
OPER. PRESS.: -
COMP. INLET: 30 KG/CM2(G) (APPROX.)
COMP. OUTLEAT: 50 KG/CM2(G) (APPROX.)

TEMPERATURE
WORKING : 0°-55° C
DESIGN : -29 TO 65°C

DESIGN PRESS.:92 KG/CM2(G)
DESIGN CLASS: 600#

LINE LEGEND

- PROPOSED LINE A/G
- PROPOSED LINE U/G
- LINE A/G (OTHER'S SCOPE)
- LINE U/G (OTHER'S SCOPE)

24"-P-01-0101-D1A
- MATERIAL SPEC.
- LINE NO.
- UNIT NO.
- PROCESS FLUID (NG/RLNG)
- LINE SIZE (NOMINAL)

VALVE LEGEND

- BALL VALVE FLANGE END
- BALL VALVE BW END/UPTO 1½" SW END.
- PLUG VALVE BW END/UPTO 1½" SW END.
- PLUG VALVE FLANGE END
- GLOBE VALVE.

COMPRESSOR STATION CUM DISPATCH TERMINAL FOR NEGG (PHASE-1) P/L AT SV-32 OF GAIL'S BGPL (BAURANI-GUWAHATI P/L) (CH. 0.0 KMS. (APPX.) FROM SV-32) AT GUWAHATI (BAR PALAHA)

INDRADHANUSH GAS GRID LIMITED

मेकॉन लिमिटेड

MECON LIMITED

REV	DATE	ZONE	DESCRIPTION	BY	VERIFIED
0	26.08.19		AS PER REVISED SCHEMATIC/ GENERAL REVISION	UMAR	AKB
1	10.05.19		FOR COMMENT PURPOSE	UMAR	AKB

REVISION

REFERENCES	DRG.NO.
PIPELINE SCHEMATIC ROUTE DIAGRAM	MEC/23UU/05/28/M/000/0021, REV - 2

SECTION	OIL & GAS
LOCATION	DELHI
DESIGNED	UMAR
DRAWN	UMAR
CHECKED AND VERIFIED	AKB
APPROVED	SIG A. GANGAL
DATE	04.09.20

NORTH EAST GAS GRID (PHASE-1 P/L SECTION)

P & ID FOR DISPATCH TERMINAL FOR NEGG P/L (PHASE-1) AT SV-32 OF BGPL AT GUWAHATI (BAR PALAHA)

SCALE : NTS

DRG. NO. MEC/23UU/05/28/M/001/0001

REV 0

REV / SEC	PIPING	ELEC.	INST.	CONCURRED BY

SECTION-1

DRG. NO. MEC/23UU/05/28/M/001/0002

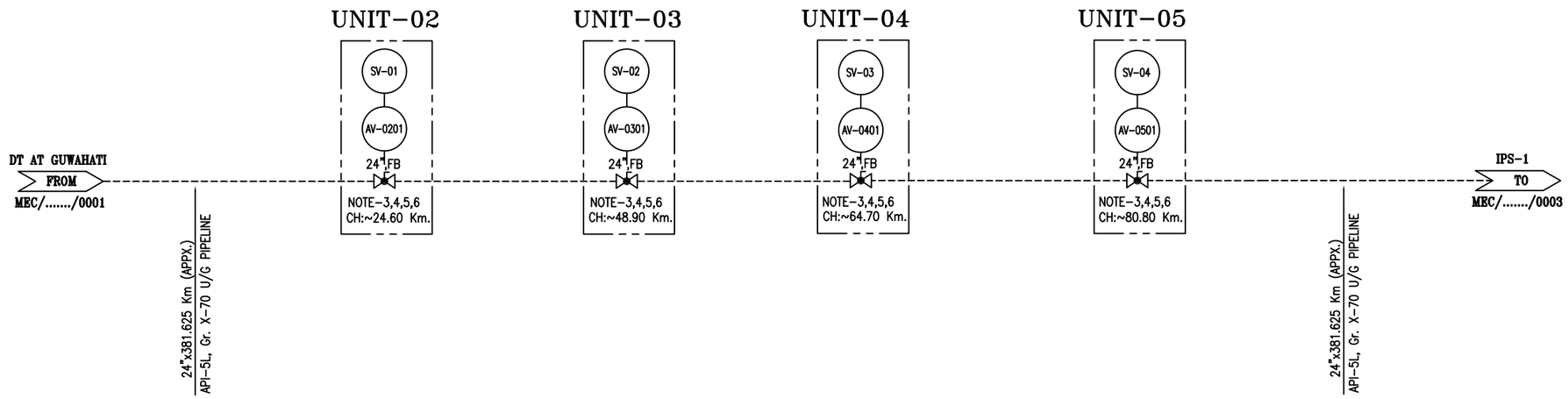

NOTES:

1. ALL VENTS SHALL BE LOCATED MIN. HEIGHT OF 3 MTR. ABOVE THE HIGHEST OPERATING LEVEL.
2. NOTE DELETED.
3. ALL SV ARE EXTENDED STEM, BUTT WELDED END WITH FULLY WELDED BODY & FULL BORE BALL VALVE.
4. BURRIED VALVE SHALL BE PROVIDED WITH CORROSION PROTECTION COATING.
5. FOR SV, HOV & AV DETAIL REFER DRG. NO. MEC/23UU/05/28/M/001/0015 & /0016
6. LOCATION OF SV STATIONS AND THEIR CHAINAGES ARE AS PER PIPELINE SCHEMATIC ROUTE DIAGRAM. HOWEVER LOCATIONS OF SV MAY GET SLIGHTLY CHANGED AS PER AVAILABILITY OF PLOT TO M/s IGGL.
7. ALL BALL VALVES WITH BUTT WELDED END SHALL HAVE FULLY WELDED BODY.
8. ALL HIGHEST POINT & LOWEST POINT OF THE STATION PIPING SHALL BE PROVIDED WITH VENT & DRAIN FACILITY & SAME SHALL BE TAKEN CARE DURING PREPARATION OF GAD.
9. NOTE DELETED.
10. SUPPORT SHALL BE PROVIDED BEFORE & AFTER MAINLINE IJ.

PROCESS DATA

FLUID: NATURAL GAS(DRY)/RLNG FLOW: – MMSCMD (APPX.) OPER. PRESS.: – KG/CM2(G) DESIGN PRESS.: 92 KG/CM2(G) DESIGN CLASS: 600#	TEMPERATURE WORKING : 0°–55° C DESIGN : –29 TO 65°C

LINE LEGEND

——— PROPOSED LINE A/G
------ PROPOSED LINE U/G

24"–P–01–0101–D1A

- MATERIAL SPEC.
- LINE NO.
- UNIT NO.
- PROCESS FLUID (NG/RLNG)
- LINE SIZE (NOMINAL)

VALVE LEGEND

- BALL VALVE FLANGE END
- BALL VALVE BW END/UPTO 1½" SW END.
- PLUG VALVE BW END/UPTO 1½" SW END.
- PLUG VALVE FLANGE END
- GLOBE VALVE.

INDRADHANUSH GAS GRID LIMITED

मेकॉन लिमिटेड

MECON LIMITED

REV / SEC	
	PIPING
	ELEC.
	INST.
	CONCURRED BY

SECTION–1

REV.NO	DATE	ZONE	DESCRIPTION	BY	VERIFIED
0	26.08.19		AS PER REVISED SCHEMATIC/ GENERAL REVISION	UMAR	AKB
A	10.05.19		FOR COMMENT PURPOSE	UMAR	AKB

REVISION

PIPELINE SCHEMATIC ROUTE DIAGRAM	MEC/23UU/05/28/M/000/0021 , REV – 2
REFERENCES	DRG.NO.

SECTION	OIL & GAS
LOCATION	DELHI
DESIGNED	UMAR
DRAWN	UMAR
CHECKED AND VERIFIED	AKB
APPROVED	SIG A. GANGAL
DATE	04.09.20

NORTH EAST GAS GRID (PHASE–1 P/L SECTION)

P & ID FOR SV STATIONS ALONG 24"NB x 381.625 KMS. (APPX.) NORTH EAST GAS GRID P/L

SCALE : NTS

DRG. NO. MEC/23UU/05/28/M/001/0002

REV 0

DRG. NO. MEC/23UU/05/28/M/001/0003

UNIT–06

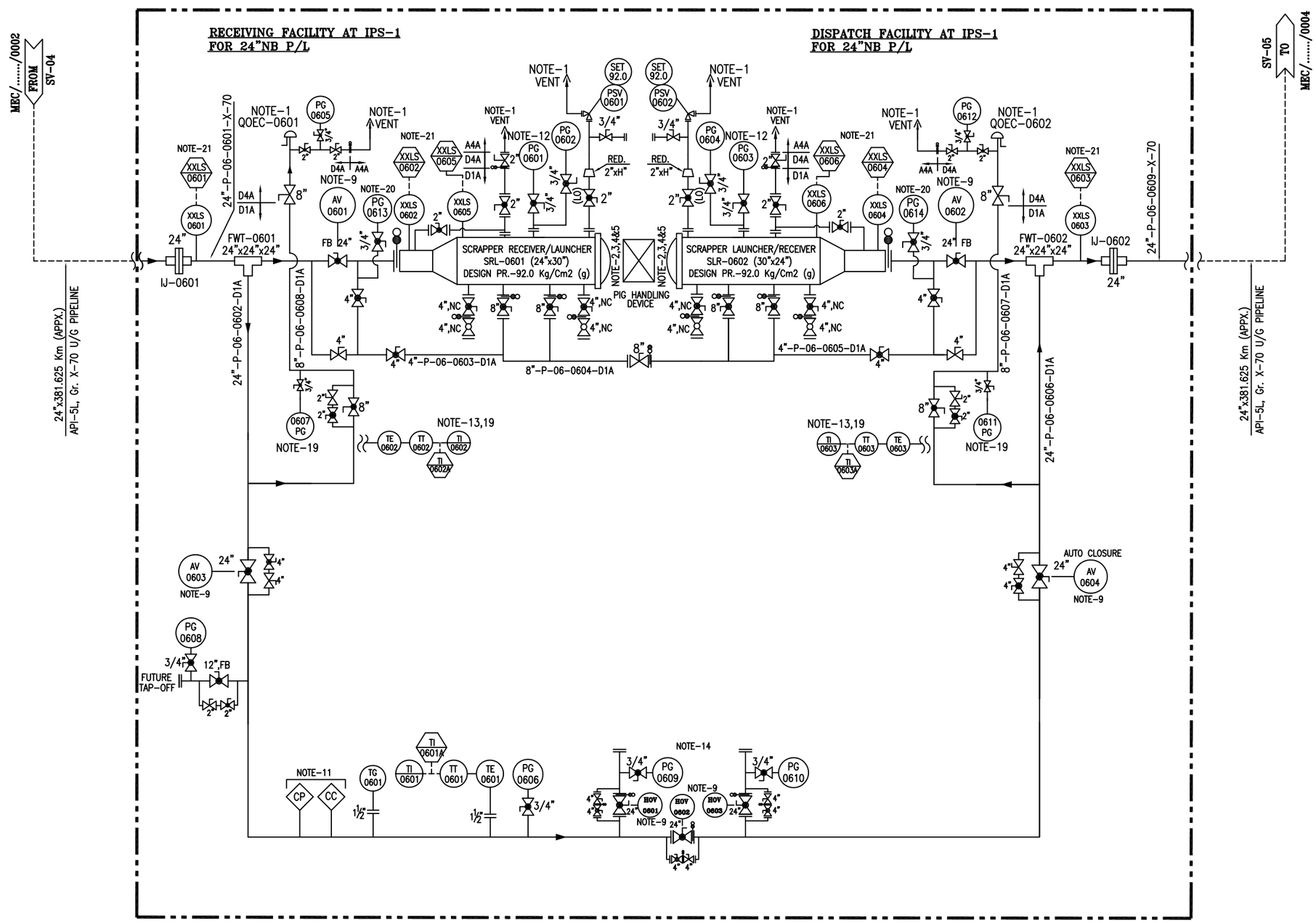

NOTES:

1. ALL VENTS SHALL BE LOCATED MIN. HEIGHT OF 3 MTR. ABOVE THE HIGHEST OPERATING LEVEL.
2. SCRAPPER LAUNCHER/RECEIVER SHALL HAVE SCRAPPER HANDLING FACILITY.
3. SCRAPPER LAUNCHER/RECEIVER SHALL BE SUITABLE FOR HANDLING INTELLIGENT PIGS.
4. SCRAPPER LAUNCHER/RECEIVER SHALL HAVE QUICK OPPENING CLOSURE.
5. SCRAPPER DOOR MECHANISM TO BE CONSTRUCTED SUCH THAT THE DOOR CAN NOT BE OPENED UNLESS SCRAPPER TRAP IS FULLY DEPRESSURISED.
6. GAS DETECTORS TO BE PROVIDED NEAR FILTERS, FLOW METERS & SCRAPPER TRAPS. SIGNAL FROM GAS DETECTOR TO BE TAKEN IN CONTROL ROOM.
7. NOTE DELETED.
8. NOTE DELETED.
9. FOR SV, HOV & AV DETAIL REFER DRG. NO. MEC/23UU/05/28/M/001/0015 & /0016
10. NOTE DELETED.
11. ONLINE RETRIVEL TYPE CORROSION MONITORING COUPON AND CORROSION PROBE SHALL BE PROVIDED. FURTHER WHEREVER SCADA SYSTEM ARE AVAILABLE, THIS SYSTEM SHALL BE ONLINE SCADA COMPATIBLE OTHERWISE DATA SHALL BE COLLECTED BY OFFLINE DATA LOGGER.
12. PG–0601 & 0603 SHALL HAVE A RANGE OF 0–1 KG/CM2(g) WITH A GAUGE SAVER.
13. DIRECT SURFACE CONTACT TYPE.
14. FUTURE PROVISION FOR SCRUBBER/CHECK METERING FACILITY. SAME SHALL BE BI–DIRECTIONAL.
15. ALL BALL VALVES WITH BUTT WELDED END SHALL HAVE FULLY WELDED BODY.
16. ALL HIGHEST POINT & LOWEST POINT OF THE STATION PIPING SHALL BE PROVIDED WITH VENT & DRAIN FACILITY & SAME SHALL BE TAKEN CARE DURING PREPARATION OF GAD.
17. NOTE DELETED.
18. SUPPORT SHALL BE PROVIDED BEFORE & AFTER MAINLINE IJ.
19. DEPRESSURIZATION VALVE SHALL BE LOCATED IN SUCH A WAY THAT PG–0607/0611 & TI–0602/0603 CAN BE READ DURING VENTING. 2" VALVE ON VENT LINE OF THE QOEC LINE SHALL BE APPROCHABLE FOR OPERATION.
20. PG–0613 & 0614 SHALL HAVE A RANGE OF 0–5 KG/CM2(G) WITH A GAUGE SAVER & LEAST COUNT OF 0.1 KG/CM2(G).
21. ALL PIG SIGNALLER SHALL BE OF NON–INTRUSIVE TYPE.

PROCESS DATA

FLUID: NATURAL GAS(DRY)/RLNG	TEMPERATURE
FLOW: – MMSCMD (APPX.)	WORKING : 0°–55° C
OPER. PRESS.: – KG/CM2(G)	DESIGN : –29 TO 65°C
DESIGN PRESS.: 92 KG/CM2(G)	
DESIGN CLASS: 600#	

LINE LEGEND

——— PROPOSED LINE A/G
– – – – – – PROPOSED LINE U/G

24"–P–06–0601–D1A
- MATERIAL SPEC.
- LINE NO.
- UNIT NO.
- PROCESS FLUID (NG/RLNG)
- LINE SIZE (NOMINAL)

VALVE LEGEND

- BALL VALVE FLANGE END
- BALL VALVE BW END/UPTO 1½" SW END.
- PLUG VALVE BW END/UPTO 1½" SW END.
- PLUG VALVE FLANGE END
- GLOBE VALVE.

INDRADHANUSH GAS GRID LIMITED

मेकॉन लिमिटेड

MECON LIMITED

REV	DATE	ZONE	DESCRIPTION	BY	VERIFIED
0	26.08.19		AS PER REVISED SCHEMATIC/ GENERAL REVISION	UMAR	AKB
A	10.05.19		FOR COMMENT PURPOSE	UMAR	AKB

PIPELINE SCHEMATIC ROUTE DIAGRAM — MEC/23UU/05/28/M/000/0021, REV – 2

REFERENCES — DRG.NO.

SECTION	OIL & GAS
LOCATION	DELHI
DESIGNED	UMAR
DRAWN	UMAR
CHECKED AND VERIFIED	AKB
APPROVED	SIG A. GANGAL
	DATE 04.09.20

NORTH EAST GAS GRID (PHASE–1 P/L SECTION)

P&ID FOR INTERMEDIATE PIGGING STATION–1 (IPS–1) ALONG 24"NB NORTH EAST GAS GRID P/L

SCALE : NTS

DRG. NO. MEC/23UU/05/28/M/001/0003 — REV 0

REV / SEC	PIPING	ELEC.	INST.
CONCURRED BY			

SECTION–1

DRG. NO. MEC/23UU/05/28/M/001/0004

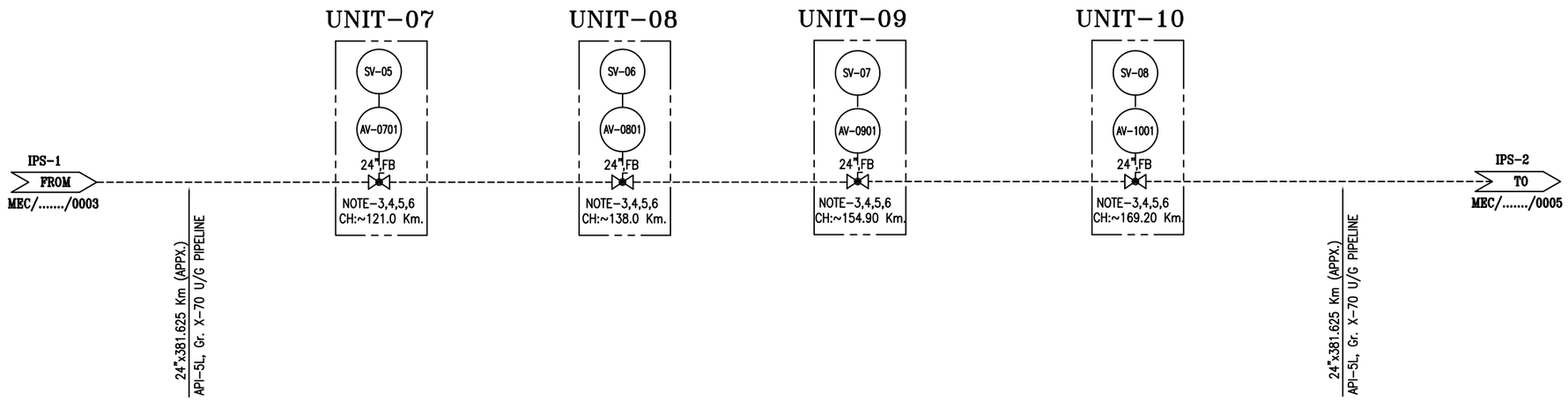

NOTES:

1. ALL VENTS SHALL BE LOCATED MIN. HEIGHT OF 3 MTR. ABOVE THE HIGHEST OPERATING LEVEL.
2. NOTE DELETED.
3. ALL SV ARE EXTENDED STEM, BUTT WELDED END WITH FULLY WELDED BODY & FULL BORE BALL VALVE.
4. BURRIED VALVE SHALL BE PROVIDED WITH CORROSION PROTECTION COATING.
5. FOR SV, HOV & AV DETAIL REFER DRG. NO. MEC/23UU/05/28/M/001/0015 & /0016
6. LOCATION OF SV STATIONS AND THEIR CHAINAGES ARE AS PER PIPELINE SCHEMATIC ROUTE DIAGRAM. HOWEVER LOCATIONS OF SV MAY GET SLIGHTLY CHANGED AS PER AVAILABILITY OF PLOT TO M/s IGGL.
7. ALL BALL VALVES WITH BUTT WELDED END SHALL HAVE FULLY WELDED BODY.
8. ALL HIGHEST POINT & LOWEST POINT OF THE STATION PIPING SHALL BE PROVIDED WITH VENT & DRAIN FACILITY & SAME SHALL BE TAKEN CARE DURING PREPARATION OF GAD.
9. NOTE DELETED.
10. SUPPORT SHALL BE PROVIDED BEFORE & AFTER MAINLINE IJ.

PROCESS DATA

FLUID: NATURAL GAS/RLNG FLOW: – MMSCMD (APPX.) OPER. PRESS.: – KG/CM2(G) DESIGN PRESS.: 92 KG/CM2(G) DESIGN CLASS: 600#	TEMPERATURE WORKING : 0°–55° C DESIGN : –29 TO 65°C

LINE LEGEND

——— PROPOSED LINE A/G
------ PROPOSED LINE U/G

24"–P–01–0101–D1A

- MATERIAL SPEC.
- LINE NO.
- UNIT NO.
- PROCESS FLUID (NG/RLNG)
- LINE SIZE (NOMINAL)

VALVE LEGEND

- BALL VALVE FLANGE END
- BALL VALVE BW END/UPTO 1½" SW END.
- PLUG VALVE BW END/UPTO 1½" SW END.
- PLUG VALVE FLANGE END
- GLOBE VALVE.

INDRADHANUSH GAS GRID LIMITED

मेकॉन लिमिटेड

MECON LIMITED

REV / SEC	
	PIPING
	ELEC.
	INST.
	CONCURRED BY

SECTION–1

REV.NO	DATE	ZONE	DESCRIPTION	BY	VERIFIED
0	26.08.19		AS PER REVISED SCHEMATIC/ GENERAL REVISION	UMAR	AKB
A	10.05.19		FOR COMMENT PURPOSE	UMAR	AKB

REVISION

REFERENCES	DRG.NO.
PIPELINE SCHEMATIC ROUTE DIAGRAM	MEC/23UU/05/28/M/000/0021 , REV – 2

SECTION	OIL & GAS
LOCATION	DELHI
DESIGNED	UMAR
DRAWN	UMAR
CHECKED AND VERIFIED	AKB
APPROVED	SIG A. GANGAL
	DATE 04.09.20

NORTH EAST GAS GRID (PHASE–1 P/L SECTION)

P & ID FOR SV STATIONS ALONG 24"NB x 381.625 KMS. (APPX.) NORTH EAST GAS GRID P/L

SCALE : NTS

DRG. NO. MEC/23UU/05/28/M/001/0004

REV 0

DRG. NO. MEC/23UU/05/28/M/001/0005

UNIT-11

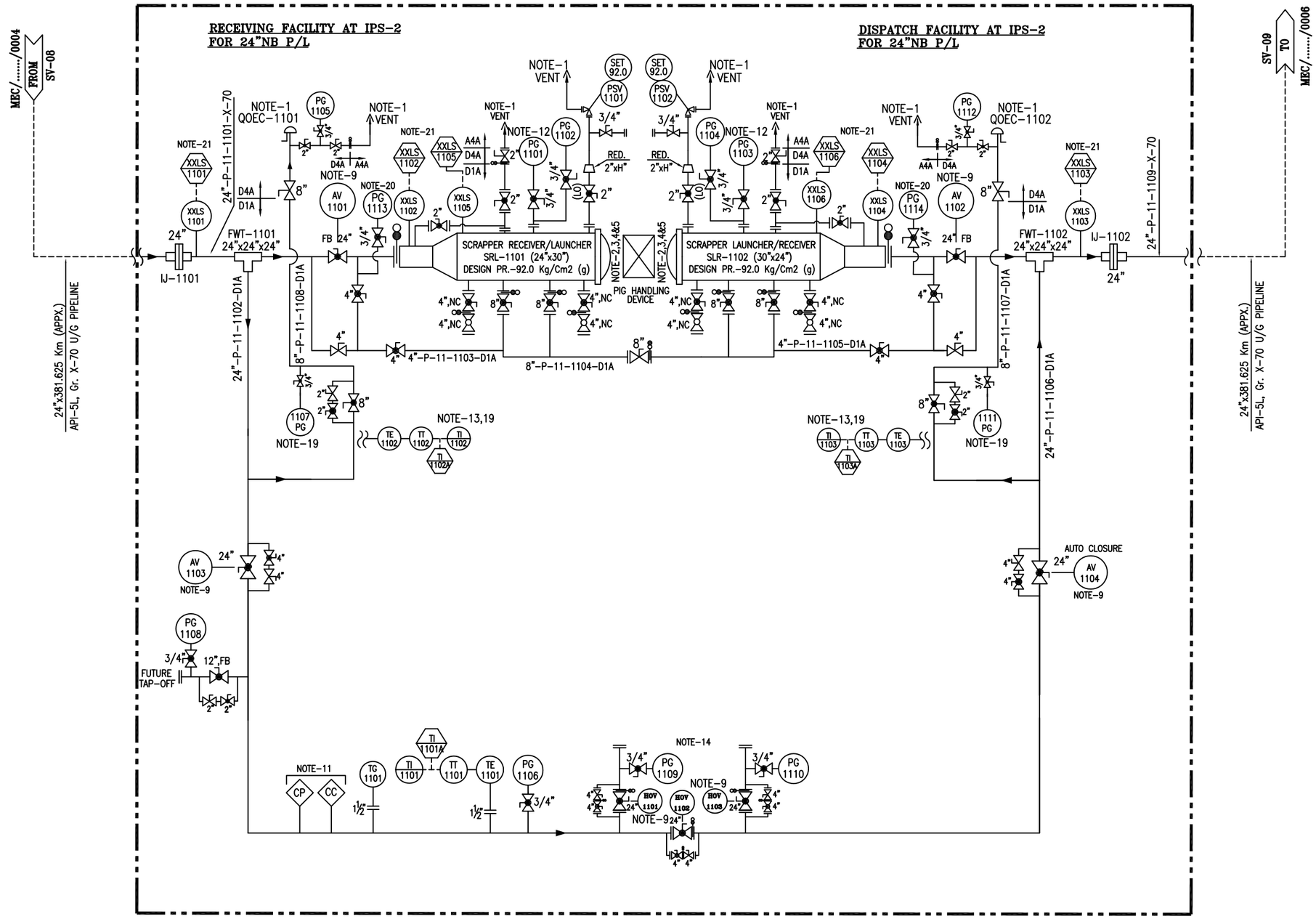

INTERMEDIATE PIGGING STATION-2 (IPS-2)
(CH. 191.10 KMS. (APPROX) FROM DT AT GUWAHATI (BAR PALAHA))

NOTES:

1. ALL VENTS SHALL BE LOCATED MIN. HEIGHT OF 3 MTR. ABOVE THE HIGHEST OPERATING LEVEL.
2. SCRAPPER LAUNCHER/RECEIVER SHALL HAVE SCRAPPER HANDLING FACILITY.
3. SCRAPPER LAUNCHER/RECEIVER SHALL BE SUITABLE FOR HANDLING INTELLIGENT PIGS.
4. SCRAPPER LAUNCHER/RECEIVER SHALL HAVE QUICK OPPENING CLOSURE.
5. SCRAPPER DOOR MECHANISM TO BE CONSTRUCTED SUCH THAT THE DOOR CAN NOT BE OPENED UNLESS SCRAPPER TRAP IS FULLY DEPRESSURISED.
6. GAS DETECTORS TO BE PROVIDED NEAR FILTERS, FLOW METERS & SCRAPPER TRAPS. SIGNAL FROM GAS DETECTOR TO BE TAKEN IN CONTROL ROOM.
7. NOTE DELETED.
8. NOTE DELETED.
9. FOR SV, HOV & AV DETAIL REFER DRG. NO. MEC/23UU/05/28/M/001/0015 & /0016
10. NOTE DELETED.
11. ONLINE RETRIVEL TYPE CORROSION MONITORING COUPON AND CORROSION PROBE SHALL BE PROVIDED. FURTHER WHEREVER SCADA SYSTEM ARE AVAILABLE, THIS SYSTEM SHALL BE ONLINE SCADA COMPATIBLE OTHERWISE DATA SHALL BE COLLECTED BY OFFLINE DATA LOGGER.
12. PG-1101 & 1103 SHALL HAVE A RANGE OF 0-1 KG/CM2(g) WITH A GAUGE SAVER.
13. DIRECT SURFACE CONTACT TYPE.
14. FUTURE PROVISION FOR SCRUBBER/CHECK METERING FACILITY. SAME SHALL BE BI-DIRECTIONAL.
15. ALL BALL VALVES WITH BUTT WELDED END SHALL HAVE FULLY WELDED BODY.
16. ALL HIGHEST POINT & LOWEST POINT OF THE STATION PIPING SHALL BE PROVIDED WITH VENT & DRAIN FACILITY & SAME SHALL BE TAKEN CARE DURING PREPARATION OF GAD.
17. NOTE DELETED.
18. SUPPORT SHALL BE PROVIDED BEFORE & AFTER MAINLINE IJ.
19. DEPRESSURIZATION VALVE SHALL BE LOCATED IN SUCH A WAY THAT PG-1107/1111 & TI-1102/1103 CAN BE READ DURING VENTING. 2" VALVE ON VENT LINE OF THE QOEC LINE SHALL BE APPROCHABLE FOR OPERATION.
20. PG-1113 & 1114 SHALL HAVE A RANGE OF 0-5 KG/CM2(G) WITH A GAUGE SAVER & LEAST COUNT OF 0.1 KG/CM2(G).
21. ALL PIG SIGNALLER SHALL BE OF NON-INTRUSIVE TYPE.

PROCESS DATA

FLUID: NATURAL GAS(DRY)/RLNG	TEMPERATURE
FLOW: - MMSCMD (APPX.)	WORKING : 0°-55° C
OPER. PRESS.: - KG/CM2(G)	DESIGN : -29 TO 65°C
DESIGN PRESS.: 92 KG/CM2(G)	
DESIGN CLASS: 600#	

LINE LEGEND

PROPOSED LINE A/G
PROPOSED LINE U/G

24"-P-11-1101-D1A
- MATERIAL SPEC.
- LINE NO.
- UNIT NO.
- PROCESS FLUID (NG/RLNG)
- LINE SIZE (NOMINAL)

VALVE LEGEND

- BALL VALVE FLANGE END
- BALL VALVE BW END/UPTO 1½" SW END.
- PLUG VALVE BW END/UPTO 1½" SW END.
- PLUG VALVE FLANGE END
- GLOBE VALVE.

INDRADHANUSH GAS GRID LIMITED

मेकॉन लिमिटेड

MECON LIMITED

REV	DATE	ZONE	DESCRIPTION	BY	VERIFIED
0	26.08.19		AS PER REVISED SCHEMATIC/ GENERAL REVISION	UMAR	AKB
A	10.05.19		FOR COMMENT PURPOSE	UMAR	AKB

REFERENCES	DRG.NO.
PIPELINE SCHEMATIC ROUTE DIAGRAM	MEC/23UU/05/28/M/000/0021 , REV - 2

SECTION	OIL & GAS
LOCATION	DELHI
DESIGNED	UMAR
DRAWN	UMAR
CHECKED AND VERIFIED	AKB
APPROVED	SIG A. GANGAL
	DATE 04.09.20

NORTH EAST GAS GRID (PHASE-1 P/L SECTION)

P&ID FOR INTERMEDIATE PIGGING STATION-2 (IPS-2) ALONG 24"NB NORTH EAST GAS GRID P/L

SCALE : NTS

DRG. NO. MEC/23UU/05/28/M/001/0005 REV 0

REV / SEC	
PIPING	
ELEC.	
INST.	
CONCURRED BY	

SECTION-1

DRG. NO. MEC/23UU/05/28/M/001/0006

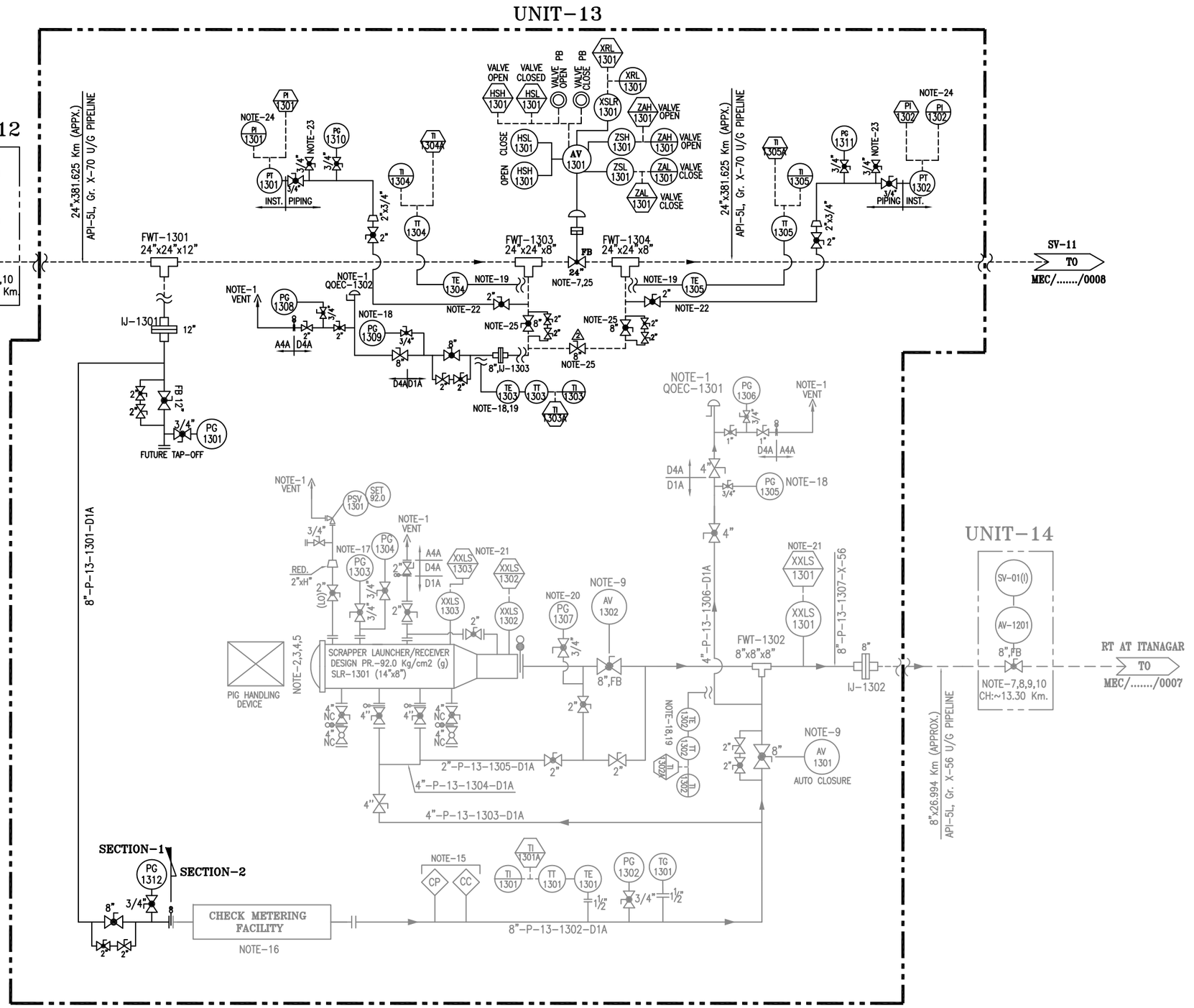

SV-10 CUM DISPATCH FACILITY FOR 8"NBX26.994 KMS. P/L TO RT ITANAGAR AT BARPHALONG GAON
(CH. 219.692 KMS. (APPROX) FROM DT AT GUWAHATI (BAR PALAHA))

NOTES:

1. ALL VENTS SHALL BE LOCATED MIN. HEIGHT OF 3 MTR. ABOVE THE HIGHEST OPERATING LEVEL.
2. NOTE DELETED.
3. NOTE DELETED.
4. NOTE DELETED.
5. NOTE DELETED.
6. NOTE DELETED.
7. ALL SV ARE EXTENDED STEM, BUTT WELDED END WITH FULLY WELDED BODY & FULL BORE BALL VALVE.
8. BURRIED VALVE SHALL BE PROVIDED WITH CORROSION PROTECTION COATING.
9. FOR SV, HOV & AV DETAIL REFER DRG. NO. MEC/23UU/05/28/M/001/0015 & /0016
10. LOCATION OF SV STATIONS AND THEIR CHAINAGES ARE AS PER PIPELINE SCHEMATIC ROUTE DIAGRAM. HOWEVER LOCATIONS OF SV MAY GET SLIGHTLY CHANGED AS PER AVAILABILITY OF PLOT TO M/s IGGL.
11. ALL BALL VALVES WITH BUTT WELDED END SHALL HAVE FULLY WELDED BODY.
12. ALL HIGHEST POINT & LOWEST POINT OF THE STATION PIPING SHALL BE PROVIDED WITH VENT & DRAIN FACILITY & SAME SHALL BE TAKEN CARE DURING PREPARATION OF GAD.
13. NOTE DELETED.
14. SUPPORT SHALL BE PROVIDED BEFORE & AFTER MAINLINE IJ.
15. NOTE DELETED.
16. NOTE DELETED.
17. NOTE DELETED.
18. DEPRESSURIZATION VALVE SHALL BE LOCATED IN SUCH A WAY THAT PG-1309 TI-1303 CAN BE READ DURING VENTING. 2" VALVE ON VENT LINE OF THE QOEC LINE SHALL BE APPROCHABLE FOR OPERATION.
19. DIRECT SURFACE CONTACT TYPE.
20. NOTE DELETED.
21. NOTE DELETED.
22. ALL PG, PT CONNECTION SHALL BE TAKEN FROM 2" TWO ISOLATION VALVES AND THEN AFTER IT SHOULD BE CONVERTED TO REQUIRE NPT CONNECTION.
23. GAS TAPPING FOR VALVE ACTUATOR.
24. FOR PG & PT DETAIL REFER MECON STANDARD DRG.
25. EXTENDED STEM VALVE.

PROCESS DATA

FLUID: NATURAL GAS(DRY)/RLNG
FLOW: – MMSCMD (APPX.)
OPER. PRESS.: – KG/CM2(G)
DESIGN PRESS.: 92 KG/CM2(G)
DESIGN CLASS: 600#

TEMPERATURE
WORKING : 0°–55° C
DESIGN –29 TO 65°C

LINE LEGEND

- PROPOSED LINE A/G
- PROPOSED LINE U/G
- LINE A/G (OTHER'S SCOPE)
- LINE U/G (OTHER'S SCOPE)

24"–P–01–0101–D1A
8"–P–01–0101–D1A

- MATERIAL SPEC.
- LINE NO.
- UNIT NO.
- PROCESS FLUID (NG/RLNG)
- LINE SIZE (NOMINAL)

VALVE LEGEND

- BALL VALVE FLANGE END
- BALL VALVE BW END/UPTO 1½" SW END.
- PLUG VALVE BW END/UPTO 1½" SW END.
- PLUG VALVE FLANGE END
- GLOBE VALVE.

INDRADHANUSH GAS GRID LIMITED

मेकॉन लिमिटेड

MECON LIMITED

REV	DATE	ZONE	DESCRIPTION	BY	VERIFIED
2	04.09.20		AS PER REQUIREMENT	UMAR	AKB
1	18.03.20		AS PER REVISED SCHEMATIC/ GENERAL REVISION	RASHMI	AKB
0	26.08.19		AS PER REVISED SCHEMATIC/ GENERAL REVISION	UMAR	AKB
A	10.05.19		FOR COMMENT PURPOSE	UMAR	AKB

REVISION

REFERENCES	DRG.NO.
PIPELINE SCHEMATIC ROUTE DIAGRAM	MEC/23UU/05/28/M/000/0021 , REV – 2

REV / SEC	PIPING	ELEC.	INST.
CONCURRED BY			

SECTION–1

SECTION	OIL & GAS
LOCATION	DELHI
DESIGNED	UMAR
DRAWN	UMAR
CHECKED AND VERIFIED	AKB
APPROVED	SIG A. GANGAL
DATE	04.09.20

NORTH EAST GAS GRID (PHASE–1 P/L SECTION)

P & ID FOR SV–09 & SV–10 CUM DISPATCH FACILITY FOR 8"NBX26.994 KMS. P/L TO RT ITANAGAR

SCALE : NTS

DRG. NO. MEC/23UU/05/28/M/001/0006

REV 2

DRG. NO. MEC/23UU/05/28/M/001/0008

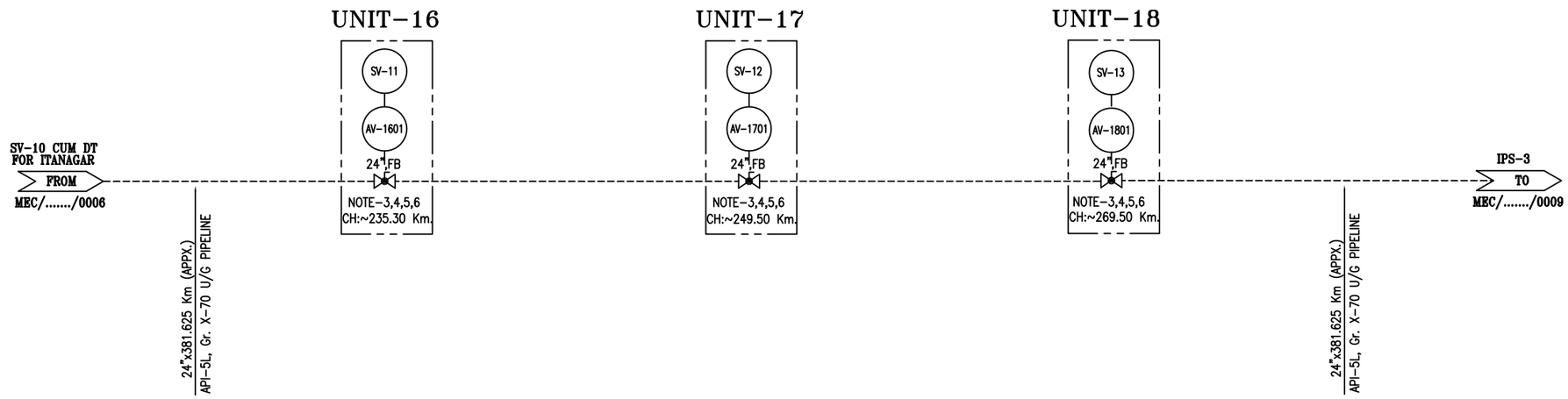

NOTES:

1. ALL VENTS SHALL BE LOCATED MIN. HEIGHT OF 3 MTR. ABOVE THE HIGHEST OPERATING LEVEL.
2. NOTE DELETED.
3. ALL SV ARE EXTENDED STEM, BUTT WELDED END WITH FULLY WELDED BODY & FULL BORE BALL VALVE.
4. BURRIED VALVE SHALL BE PROVIDED WITH CORROSION PROTECTION COATING.
5. FOR SV, HOV & AV DETAIL REFER DRG. NO. MEC/23UU/05/28/M/001/0015 & /0016
6. LOCATION OF SV STATIONS AND THEIR CHAINAGES ARE AS PER PIPELINE SCHEMATIC ROUTE DIAGRAM. HOWEVER LOCATIONS OF SV MAY GET SLIGHTLY CHANGED AS PER AVAILABILITY OF PLOT TO M/s IGGL.
7. ALL BALL VALVES WITH BUTT WELDED END SHALL HAVE FULLY WELDED BODY.
8. ALL HIGHEST POINT & LOWEST POINT OF THE STATION PIPING SHALL BE PROVIDED WITH VENT & DRAIN FACILITY & SAME SHALL BE TAKEN CARE DURING PREPARATION OF GAD.
9. NOTE DELETED.
10. SUPPORT SHALL BE PROVIDED BEFORE & AFTER MAINLINE IJ.

PROCESS DATA

FLUID: NATURAL GAS(DRY)/RLNG FLOW: – MMSCMD (APPX.) OPER. PRESS.: – KG/CM2(G) DESIGN PRESS.: 92 KG/CM2(G) DESIGN CLASS: 600#	TEMPERATURE WORKING : 0°–55° C DESIGN : –29 TO 65°C

LINE LEGEND

——— PROPOSED LINE A/G
------ PROPOSED LINE U/G

24"–P–01–0101–D1A

- MATERIAL SPEC.
- LINE NO.
- UNIT NO.
- PROCESS FLUID (NG/RLNG)
- LINE SIZE (NOMINAL)

VALVE LEGEND

- BALL VALVE FLANGE END
- BALL VALVE BW END/UPTO 1½" SW END.
- PLUG VALVE BW END/UPTO 1½" SW END.
- PLUG VALVE FLANGE END
- GLOBE VALVE.

INDRADHANUSH GAS GRID LIMITED

मेकॉन लिमिटेड

MECON LIMITED

REV / SEC	
	PIPING
	ELEC.
	INST.
	CONCURRED BY

SECTION–1

REV.NO	DATE	ZONE	DESCRIPTION	BY	VERIFIED
0	26.08.19		AS PER REVISED SCHEMATIC/ GENERAL REVISION	UMAR	AKB
A	10.05.19		FOR COMMENT PURPOSE	UMAR	AKB

REVISION

PIPELINE SCHEMATIC ROUTE DIAGRAM	MEC/23UU/05/28/M/000/0021 , REV – 2
REFERENCES	DRG.NO.

SECTION	OIL & GAS
LOCATION	DELHI
DESIGNED	UMAR
DRAWN	UMAR
CHECKED AND VERIFIED	AKB
APPROVED	SIG A. GANGAL
	DATE 04.09.20

NORTH EAST GAS GRID (PHASE–1 P/L SECTION)

P & ID FOR SV STATIONS ALONG 24"NB x 381.625 KMS. (APPX.) NORTH EAST GAS GRID P/L

SCALE : NTS

DRG. NO. MEC/23UU/05/28/M/001/0008

REV 0

DRG. NO. MEC/23UU/05/28/M/001/0009

UNIT-19

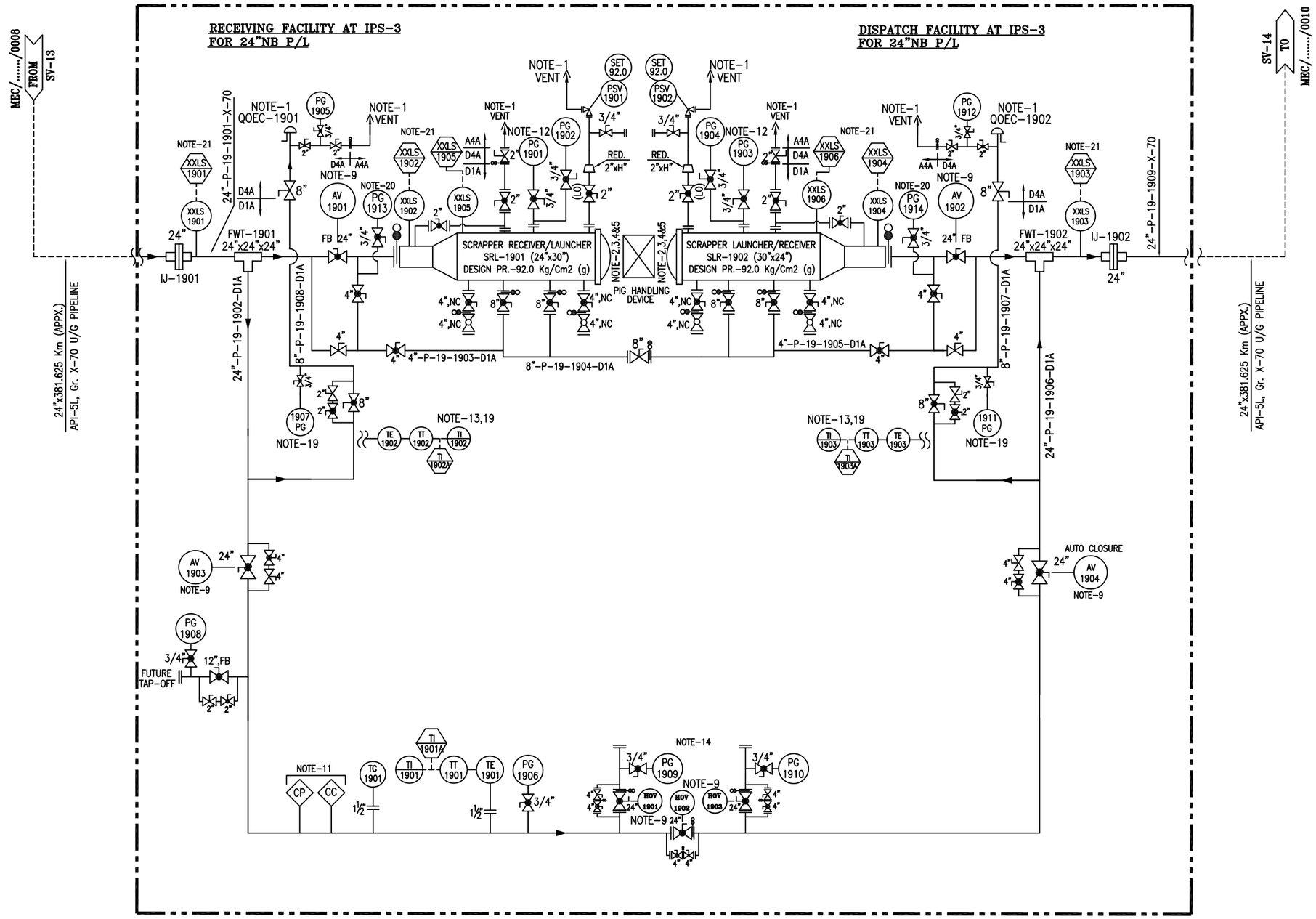

INTERMEDIATE PIGGING STATION-3 (IPS-3)
(CH. 292.0 KMS. (APPROX) FROM DT AT GUWAHATI (BAR PALAHA))

NOTES:

1. ALL VENTS SHALL BE LOCATED MIN. HEIGHT OF 3 MTR. ABOVE THE HIGHEST OPERATING LEVEL.
2. SCRAPPER LAUNCHER/RECEIVER SHALL HAVE SCRAPPER HANDLING FACILITY.
3. SCRAPPER LAUNCHER/RECEIVER SHALL BE SUITABLE FOR HANDLING INTELLIGENT PIGS.
4. SCRAPPER LAUNCHER/RECEIVER SHALL HAVE QUICK OPPENING CLOSURE.
5. SCRAPPER DOOR MECHANISM TO BE CONSTRUCTED SUCH THAT THE DOOR CAN NOT BE OPENED UNLESS SCRAPPER TRAP IS FULLY DEPRESSURISED.
6. GAS DETECTORS TO BE PROVIDED NEAR FILTERS, FLOW METERS & SCRAPPER TRAPS. SIGNAL FROM GAS DETECTOR TO BE TAKEN IN CONTROL ROOM.
7. NOTE DELETED.
8. NOTE DELETED.
9. FOR SV, HOV & AV DETAIL REFER DRG. NO. MEC/23UU/05/28/M/001/0015 & /0016
10. NOTE DELETED.
11. ONLINE RETRIVEL TYPE CORROSION MONITORING COUPON AND CORROSION PROBE SHALL BE PROVIDED. FURTHER WHEREVER SCADA SYSTEM ARE AVAILABLE, THIS SYSTEM SHALL BE ONLINE SCADA COMPATIBLE OTHERWISE DATA SHALL BE COLLECTED BY OFFLINE DATA LOGGER.
12. PG-1901 & 1903 SHALL HAVE A RANGE OF 0-1 KG/CM2(g) WITH A GAUGE SAVER.
13. DIRECT SURFACE CONTACT TYPE.
14. FUTURE PROVISION FOR SCRUBBER/CHECK METERING FACILITY. SAME SHALL BE BI-DIRECTIONAL.
15. ALL BALL VALVES WITH BUTT WELDED END SHALL HAVE FULLY WELDED BODY.
16. ALL HIGHEST POINT & LOWEST POINT OF THE STATION PIPING SHALL BE PROVIDED WITH VENT & DRAIN FACILITY & SAME SHALL BE TAKEN CARE DURING PREPARATION OF GAD.
17. NOTE DELETED.
18. SUPPORT SHALL BE PROVIDED BEFORE & AFTER MAINLINE IJ.
19. DEPRESSURIZATION VALVE SHALL BE LOCATED IN SUCH A WAY THAT PG-1907/1911 & TI-1902/1903 CAN BE READ DURING VENTING. 2" VALVE ON VENT LINE OF THE QOEC LINE SHALL BE APPROCHABLE FOR OPERATION.
20. PG-1913 & 1914 SHALL HAVE A RANGE OF 0-5 KG/CM2(G) WITH A GAUGE SAVER & LEAST COUNT OF 0.1 KG/CM2(G).
21. ALL PIG SIGNALLER SHALL BE OF NON-INTRUSIVE TYPE.

PROCESS DATA

FLUID: NATURAL GAS(DRY)/RLNG	TEMPERATURE
FLOW: - MMSCMD (APPX.)	WORKING : 0°-55° C
OPER. PRESS.: - KG/CM2(G)	DESIGN : -29 TO 65°C
DESIGN PRESS.: 92 KG/CM2(G)	
DESIGN CLASS: 600#	

LINE LEGEND

——— PROPOSED LINE A/G
------ PROPOSED LINE U/G

24"-P-19-1901-D1A
- MATERIAL SPEC.
- LINE NO.
- UNIT NO.
- PROCESS FLUID (NG/RLNG)
- LINE SIZE (NOMINAL)

VALVE LEGEND

- BALL VALVE FLANGE END
- BALL VALVE BW END/UPTO 1½" SW END.
- PLUG VALVE BW END/UPTO 1½" SW END.
- PLUG VALVE FLANGE END
- GLOBE VALVE.

INDRADHANUSH GAS GRID LIMITED

मेकॉन लिमिटेड

MECON LIMITED

REV	DATE	ZONE	DESCRIPTION	BY	VERIFIED
0	26.08.19		AS PER REVISED SCHEMATIC/ GENERAL REVISION	UMAR	AKB
A	10.05.19		FOR COMMENT PURPOSE	UMAR	AKB

PIPELINE SCHEMATIC ROUTE DIAGRAM	MEC/23UU/05/28/M/000/0021 , REV - 2
REFERENCES	DRG.NO.

SECTION	OIL & GAS
LOCATION	DELHI
DESIGNED	UMAR
DRAWN	UMAR
CHECKED AND VERIFIED	AKB
APPROVED	SIG A. GANGAL
	DATE 04.09.20

NORTH EAST GAS GRID (PHASE-1 P/L SECTION)

P&ID FOR INTERMEDIATE PIGGING STATION-3 (IPS-3) ALONG 24"NB NORTH EAST GAS GRID P/L

SCALE : NTS

DRG. NO. MEC/23UU/05/28/M/001/0009 REV 0

REV / SEC	
PIPING	
ELEC.	
INST.	
CONCURRED BY	

SECTION-1

DRG. NO. MEC/23UU/05/28/M/001/0010

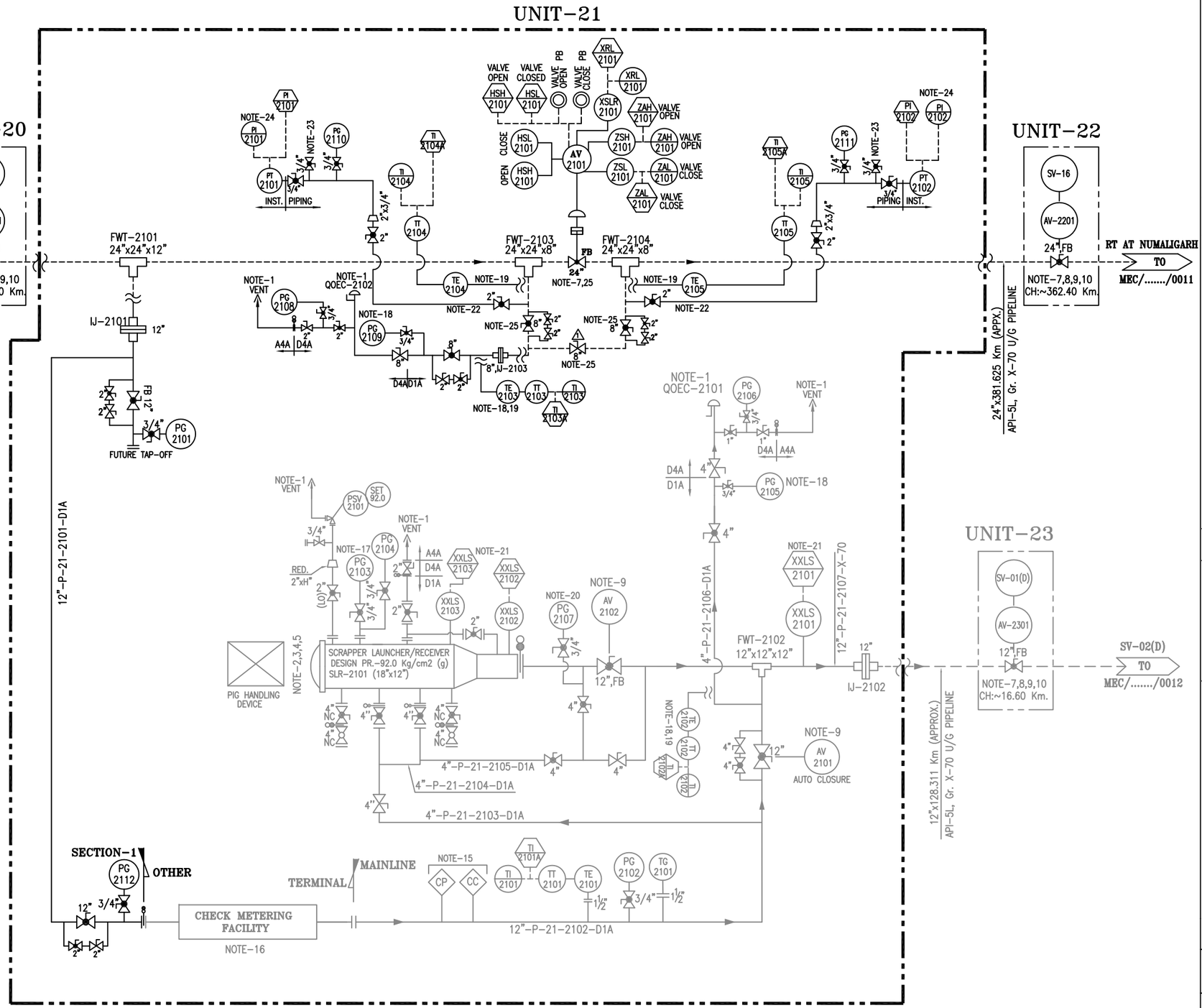

SV-15 CUM DISPATCH FACILITY FOR 12"NBX128.311 KMS. P/L TO RT DIMAPUR (CUM FUTURE IPS) AT RANGAGARA KHUTI (JORHAT)
(CH. 340.50 KMS. (APPROX) FROM DT AT GUWAHATI (BAR PALAHA))

NOTES:

1. ALL VENTS SHALL BE LOCATED MIN. HEIGHT OF 3 MTR. ABOVE THE HIGHEST OPERATING LEVEL.
2. NOTE DELETED.
3. NOTE DELETED.
4. NOTE DELETED.
5. NOTE DELETED.
6. NOTE DELETED.
7. ALL SV ARE EXTENDED STEM, BUTT WELDED END WITH FULLY WELDED BODY & FULL BORE BALL VALVE.
8. BURRIED VALVE SHALL BE PROVIDED WITH CORROSION PROTECTION COATING.
9. FOR SV, HOV & AV DETAIL REFER DRG. NO. MEC/23UU/05/28/M/001/0015 & /0016
10. LOCATION OF SV STATIONS AND THEIR CHAINAGES ARE AS PER PIPELINE SCHEMATIC ROUTE DIAGRAM. HOWEVER LOCATIONS OF SV MAY GET SLIGHTLY CHANGED AS PER AVAILABILITY OF PLOT TO M/s IGGL.
11. ALL BALL VALVES WITH BUTT WELDED END SHALL HAVE FULLY WELDED BODY.
12. ALL HIGHEST POINT & LOWEST POINT OF THE STATION PIPING SHALL BE PROVIDED WITH VENT & DRAIN FACILITY & SAME SHALL BE TAKEN CARE DURING PREPARATION OF GAD.
13. NOTE DELETED.
14. SUPPORT SHALL BE PROVIDED BEFORE & AFTER MAINLINE IJ.
15. NOTE DELETED.
16. NOTE DELETED.
17. NOTE DELETED.
18. DEPRESSURIZATION VALVE SHALL BE LOCATED IN SUCH A WAY THAT PG-2109 TI-2103 CAN BE READ DURING VENTING. 2" VALVE ON VENT LINE OF THE QOEC LINE SHALL BE APPROCHABLE FOR OPERATION.
19. DIRECT SURFACE CONTACT TYPE.
20. NOTE DELETED.
21. NOTE DELETED.
22. ALL PG, PT CONNECTION SHALL BE TAKEN FROM 2" TWO ISOLATION VALVES AND THEN AFTER IT SHOULD BE CONVERTED TO REQUIRE NPT CONNECTION.
23. GAS TAPPING FOR VALVE ACTUATOR.
24. FOR PG & PT DETAIL REFER MECON STANDARD DRG.
25. EXTENDED STEM VALVE.

PROCESS DATA

FLUID: NATURAL GAS(DRY)/RLNG	TEMPERATURE
FLOW: – MMSCMD (APPX.)	WORKING : 0°-55° C
OPER. PRESS.: – KG/CM2(G)	DESIGN : -29 TO 65°C
DESIGN PRESS.: 92 KG/CM2(G)	
DESIGN CLASS: 600#	

LINE LEGEND

- PROPOSED LINE A/G
- PROPOSED LINE U/G
- LINE A/G (OTHER'S SCOPE)
- LINE U/G (OTHER'S SCOPE)

24"-P-01-0101-D1A

- MATERIAL SPEC.
- LINE NO.
- UNIT NO.
- PROCESS FLUID (NG/RLNG)
- LINE SIZE (NOMINAL)

VALVE LEGEND

- BALL VALVE FLANGE END
- BALL VALVE BW END/UPTO 1½" SW END.
- PLUG VALVE BW END/UPTO 1½" SW END.
- PLUG VALVE FLANGE END
- GLOBE VALVE.

INDRADHANUSH GAS GRID LIMITED

मेकॉन लिमिटेड

MECON LIMITED

REV	DATE	ZONE	DESCRIPTION	BY	VERIFIED
1	04.09.20		AS PER REQUIREMENT	UMAR	AKB
0	26.08.19		AS PER REVISED SCHEMATIC/ GENERAL REVISION	UMAR	AKB
A	10.05.19		FOR COMMENT PURPOSE	UMAR	AKB

REVISION

REFERENCES	DRG.NO.
PIPELINE SCHEMATIC ROUTE DIAGRAM	MEC/23UU/05/28/M/000/0021 , REV – 2

SECTION	OIL & GAS
LOCATION	DELHI
DESIGNED	UMAR
DRAWN	UMAR
CHECKED AND VERIFIED	AKB
APPROVED	SIG A. GANGAL
DATE	04.09.20

NORTH EAST GAS GRID (PHASE-1 P/L SECTION)

P & ID FOR SV-14, SV-16 & SV-15 CUM DISPATCH FACILITY FOR 12"NBX128.311 KMS. P/L TO RT DIMAPUR

SCALE : NTS

DRG. NO. MEC/23UU/05/28/M/001/0010

REV 1

REV / SEC					
	PIPING				
	ELEC.				
	INST.				
	CONCURRED BY				

SECTION-1

DRG. NO. MEC/23UU/05/28/M/001/0011

UNIT-24

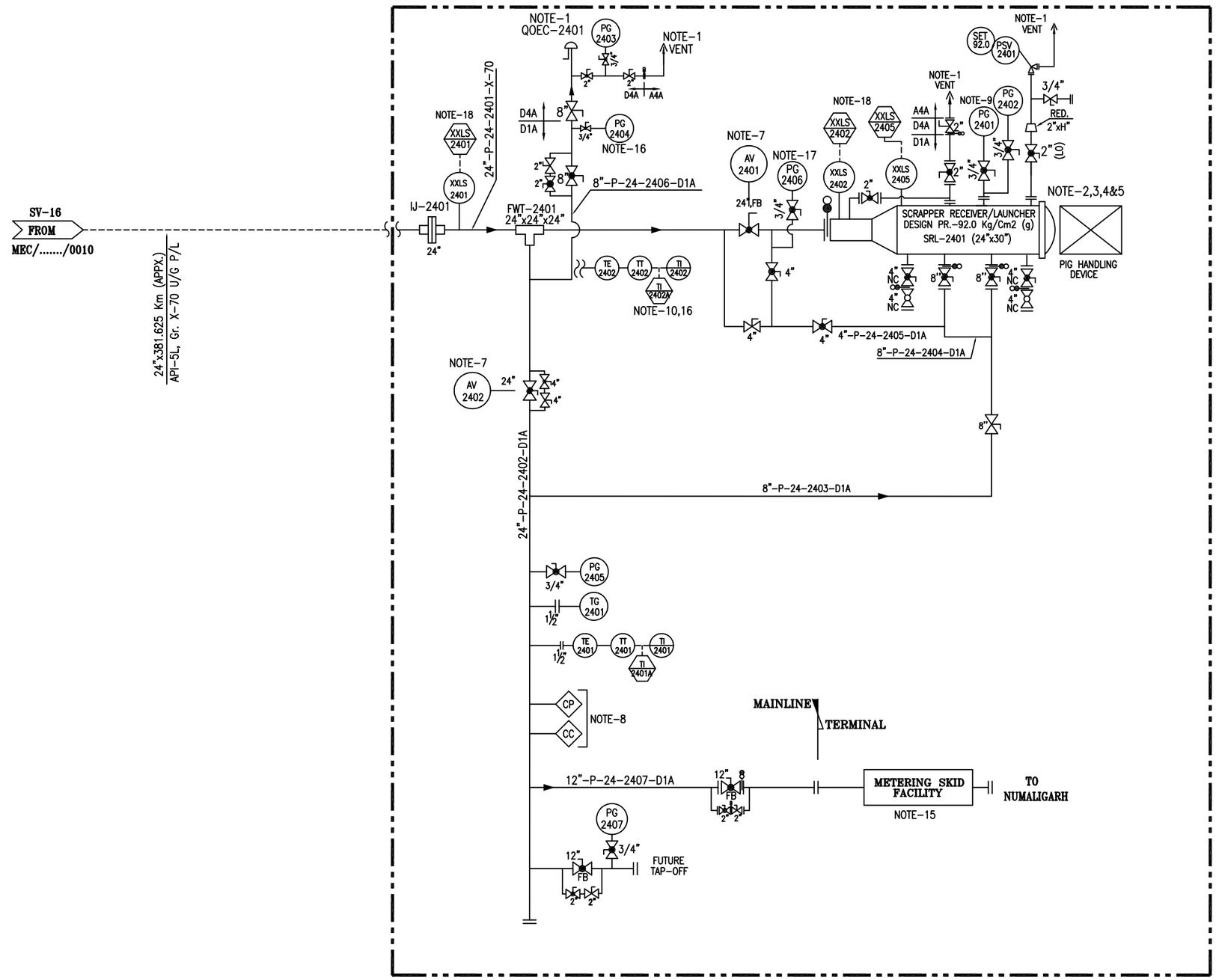

RECEIVING TERMINAL AT NUMALIGARH FOR 24"NBx381.625 KMS. P/L
CH. 381.625 KMS. (APPROX) FROM DT AT GUWAHATI (BAR PALAHA)

NOTES:

1. ALL VENTS SHALL BE LOCATED MIN. HEIGHT OF 3 MTR. ABOVE THE HIGHEST OPERATING LEVEL.
2. SCRAPPER LAUNCHER/RECEIVER SHALL HAVE SCRAPPER HANDLING FACILITY.
3. SCRAPPER LAUNCHER/RECEIVER SHALL BE SUITABLE FOR HANDLING INTELLIGENT PIGS.
4. SCRAPPER LAUNCHER/RECEIVER SHALL HAVE QUICK OPPENING CLOSURE.
5. SCRAPPER DOOR MECHANISM TO BE CONSTRUCTED SUCH THAT THE DOOR CAN NOT BE OPENED UNLESS SCRAPPER TRAP IS FULLY DEPRESSURISED.
6. GAS DETECTORS TO BE PROVIDED NEAR FILTERS, FLOW METERS & SCRAPPER TRAPS. SIGNAL FROM GAS DETECTOR TO BE TAKEN IN CONTROL ROOM.
7. FOR SV, HOV & AV DETAIL REFER DRG. NO. MEC/23UU/05/28/M/001/0015 & /0016
8. ONLINE RETRIVEL TYPE CORROSION MONITORING COUPON AND CORROSION PROBE SHALL BE PROVIDED. FURTHER WHEREVER SCADA SYSTEM ARE AVAILABLE, THIS SYSTEM SHALL BE ONLINE SCADA COMPATIBLE OTHERWISE DATA SHALL BE COLLECTED BY OFFLINE DATA LOGGER.
9. PG-2401 SHALL HAVE A RANGE OF 0-1 KG/CM2(g) WITH A GAUGE SAVER.
10. DIRECT SURFACE CONTACT TYPE.
11. ALL BALL VALVES WITH BUTT WELDED END SHALL HAVE FULLY WELDED BODY.
12. ALL HIGHEST POINT & LOWEST POINT OF THE STATION PIPING SHALL BE PROVIDED WITH VENT & DRAIN FACILITY & SAME SHALL BE TAKEN CARE DURING PREPARATION OF GAD.
13. NOTE DELETED.
14. SUPPORT SHALL BE PROVIDED BEFORE & AFTER MAINLINE IJ.
15. CUSTODY TRANSFER METERING SKID P&ID SHALL BE PROVIDED SEPARATELY.
16. DEPRESSURIZATION VALVE SHALL BE LOCATED IN SUCH A WAY THAT PG-2404 & TI-2402 CAN BE READ DURING VENTING. 2" VALVE ON VENT LINE OF THE QOEC LINE SHALL BE APPROCHABLE FOR OPERATION.
17. PG-2406 SHALL HAVE A RANGE OF 0-5 KG/CM2(G) WITH A GAUGE SAVER & LEAST COUNT OF 0.1 KG/CM2(G).
18. ALL PIG SIGNALLER SHALL BE OF NON-INTRUSIVE TYPE.

PROCESS DATA

FLUID: NATURAL GAS(DRY)/RLNG	TEMPERATURE
FLOW: - MMSCMD (APPX.)	WORKING : 0°-55° C
OPER. PRESS.: - KG/CM2(G)	DESIGN : -29 TO 65°C
DESIGN PRESS.: 92 KG/CM2(G)	
DESIGN CLASS: 600#	

LINE LEGEND

——— PROPOSED LINE A/G
------ PROPOSED LINE U/G

24"-P-24-2401-D1A
- MATERIAL SPEC.
- LINE NO.
- UNIT NO.
- PROCESS FLUID (NG/RLNG)
- LINE SIZE (NOMINAL)

VALVE LEGEND

- BALL VALVE FLANGE END
- BALL VALVE BW END/UPTO 1½" SW END.
- PLUG VALVE BW END/UPTO 1½" SW END.
- PLUG VALVE FLANGE END
- GLOBE VALVE.

INDRADHANUSH GAS GRID LIMITED

मेकॉन लिमिटेड

MECON LIMITED

REV / SEC	
	PIPING
	ELEC.
	INST.
	CONCURRED BY

SECTION-1

REV.NO	DATE	ZONE	DESCRIPTION	BY	VERIFIED
0	26.08.19		AS PER REVISED SCHEMATIC/ GENERAL REVISION	UMAR	AKB
1	10.05.19		FOR COMMENT PURPOSE	UMAR	AKB

REFERENCES	DRG.NO.
PIPELINE SCHEMATIC ROUTE DIAGRAM	MEC/23UU/05/28/M/000/0021 , REV - 2

SECTION	OIL & GAS	
LOCATION	DELHI	
DESIGNED	UMAR	
DRAWN	UMAR	
CHECKED AND VERIFIED	AKB	
APPROVED	SIG	A. GANGAL
	DATE	04.09.20

NORTH EAST GAS GRID (PHASE-1 P/L SECTION)

P&ID FOR RECEIVING TERMINAL FOR 24"NBx381.625 KMS. P/L AT NUMALIGARH

SCALE : NTS

DRG. NO. MEC/23UU/05/28/M/001/0011

REV 0

DRG. NO. MEC/23UU/05/28/M/001/0015

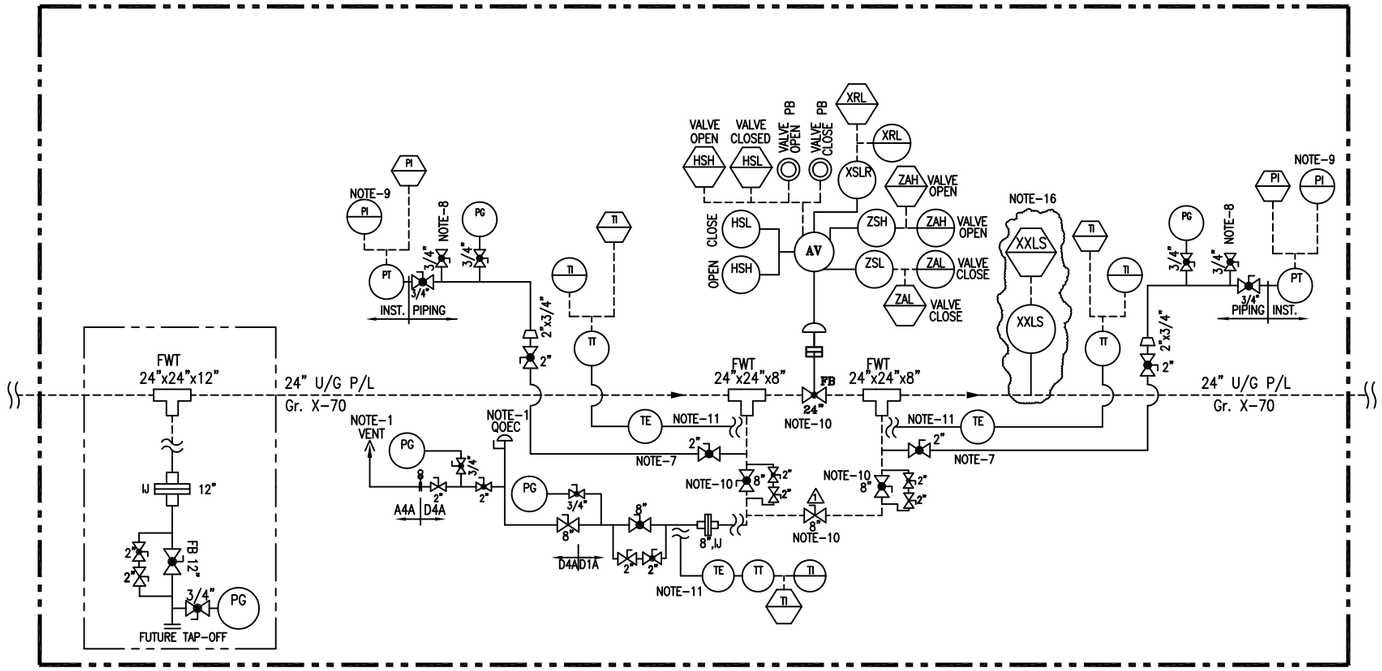

TYPICAL ARRANGEMENT FOR 24" SV (REMOTE OPERATED)

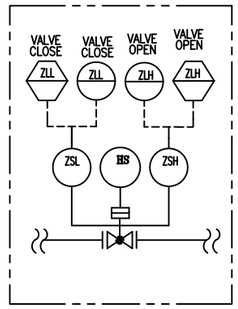

TYPICAL HOV ARRANGEMENT

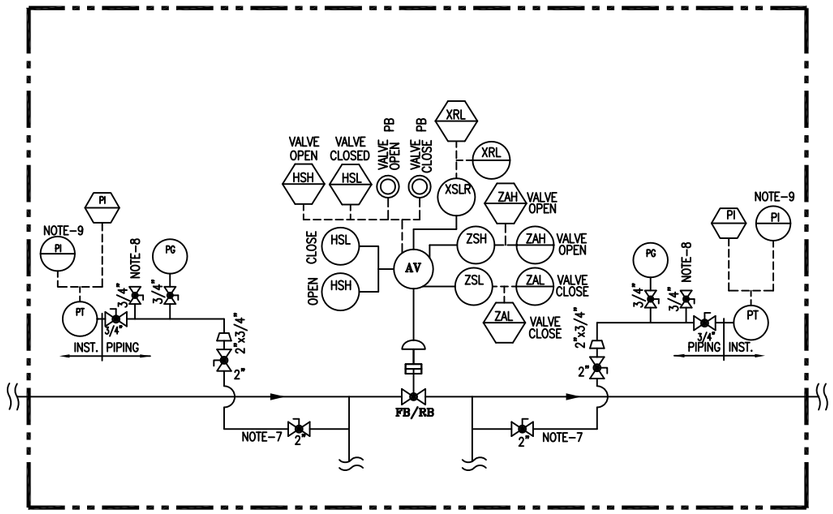

TYPICAL ARRANGEMENT FOR AV

NOTE:-

1. ALL VENT SHALL BE LOCATED MIN. HEIGHT OF 3 MTR. ABOVE THE HIGHEST OPERATING LEVEL.
2. NOTE DELETED.
3. ALL AV (ACTUATED VALVES) SHALL BE FAILED TO STAY PUT TYPE VALVE.
4. NOTE DELETED.
5. NOTE DELETED.
6. NOTE DELETED.
7. ALL PG, PT CONNECTION SHALL BE TAKEN FROM 2" TWO ISOLATION VALVES AND THEN AFTER IT SHOULD BE CONVERTED TO REQUIRE NPT CONNECTION.
8. GAS TAPPING FOR VALVE ACTUATOR.
9. FOR PG & PT DETAIL REFER MECON STANDARD DRG.
10. EXTENDED STEM VALVE.
11. DIRECT SURFACE CONTACT TYPE.
12. ALL BALL VALVES WITH BUTT WELDED END SHALL HAVE FULLY WELDED BODY.
13. ALL HIGHEST POINT & LOWEST POINT OF THE STATION PIPING SHALL BE PROVIDED WITH VENT & DRAIN FACILITY & SAME SHALL BE TAKEN CARE DURING PREPARATION OF GAD.
14. NOTE DELETED.
15. SUPPORT SHALL BE PROVIDED BEFORE & AFTER MAINLINE IJ.
16. NON-INTRUSIVE TYPE PIG SIGNALLER TO BE INSTALLED AT FIRST & LAST SV STATION BEFORE EACH INTERMEDIATE PIGGING STATION/RECEIVING STATION.

LINE LEGEND

PROPOSED LINE A/G
PROPOSED LINE U/G

VALVE LEGEND

BALL VALVE FLANGE END
BALL VALVE BW END/UPTO 1½" SW END.
PLUG VALVE BW END/UPTO 1½" SW END.
PLUG VALVE FLANGE END
GLOBE VALVE.

INDRADHANUSH GAS GRID LIMITED

मेकॉन लिमिटेड

MECON LIMITED

REV	DATE	ZONE	DESCRIPTION	BY	VERIFIED
1	04.09.20		AS PER REQUIREMENT	UMAR	AKB
0	26.08.19		AS PER REVISED SCHEMATIC/ GENERAL REVISION	UMAR	AKB
A	10.05.19		FOR COMMENT PURPOSE	UMAR	AKB

REVISION

REFERENCES	DRG.NO.
PIPELINE SCHEMATIC ROUTE DIAGRAM	MEC/23UU/05/28/M/000/0021, REV – 2

SECTION	OIL & GAS
LOCATION	DELHI
DESIGNED	UMAR
DRAWN	UMAR
CHECKED AND VERIFIED	AKB
APPROVED	SIG A. GANGAL
	DATE 04.09.20

NORTH EAST GAS GRID (PHASE-1 P/L SECTION)

TYPICAL ARRANGEMENT FOR 24" SV (REMOTE OPERATED) STATION, HOV & AV

SCALE : NTS

DRG. NO. MEC/23UU/05/28/M/001/0015

REV 1

REV / SEC	PIPING	ELEC.	INST.	CONCURRED BY

SECTION-1

P&ID

ITANAGAR SPURLINE (PIPELINE SECTION-2)

DRG. NO. MEC/23UU/05/28/M/000/0001

SYMBOLS & ABBREVIATIONS

SYMBOLS

- VP–PLUG VALVE
- VB–BALL VALVE WELDED END
- VB–BALL VALVE FLANGED END
- GATE VALVE
- GV–GLOBE VALVE
- PRESSURE RELIEF OR SAFETY VALVE (PSV)
- PRESSURE REGULATING VALVE (PCV) (SELF ACTUATING TYPE)
- NON RETURN VALVE
- CONTROL VALVE WITH SLAM SHUT–OFF VALVE
- SOLENOID VALVE
- GAS ACTUATED ISOLATION VALVE
- GAS ACTUATED ISOLATION VALVE WITH HANDWHEEL
- REDUCER
- FLANGE
- FLAME ARRESTOR (FA)
- RTU — REMOTE TERMINAL UNIT
- DIAPHRAM
- XXLS — PIG SIGNALLER
- VENT
- SPECTACLE BLIND

SYMBOLS

- PD METER
- TURBINE METER
- INSULATION JOINT (IJ)
- FLOW TEE (FWT)
- FIELD MOUNTED INSTRUMENT
- CONTROL PANEL MOUNTED INSTRUMENT
- ULTRASONIC METER
- SCADA INDICATOR, CONTROLLER OR OTHER DEVICES WITH OPERATOR ACCESS TO ADJUSTMENT.

ABBREVIATIONS

AE	ANALYZER SENSOR (GAS CHROMATOGRAPH)
AI	ANALYZER INDICATOR
AT	ANALYZER TRANSMITTER
FY	FLOW COMPUTER
FQI	FLOW TOTALIZER & INDICATOR
LG	LEVEL GAUGE
ZSH/ZSL	LIMIT SWITCHES (OPEN/CLOSE)
TI/TG	TEMPERATURE INDICATOR/ GAUGE
TE	TEMPERATURE ELEMENT
TW	THERMOWELL
DPI/DPG	DIFF. PRESSURE INDICATOR/ GAUGE
DPT	DIFF. PRESSURE TRANSMITTER
PI/PG	PRESSURE INDICATOR/ GAUGE
PT	PRESSURE TRANSMITTER
FC/FO	FAILURE TO CLOSE/OPEN
LO	LOCK OPEN
FIC/PIC	FLOW/PRESS. INDICATING CONTROLLER
I	INTERLOCK
XRL	LOCAL/REMOTE INDICATION
XSL	LOCAL/REMOTE SWITCH
HSH	HAND SWITCH HIGH
HSL	HAND SWITCH LOW
FT	FLOW TRANSMITTER
FE	FLOW ELEMENT
Q.O.E.C.	QUICK OPENING END CLOSURE

ABBREVIATIONS

TT	TEMP TRANSMITTER
FR	FLOW RECORDER
PIR	PRESSURE IND.RECORDER
TIR	TEMP. IND. RECORDER
PSH	PRESSURE SWITCH HIGH
PSL	PRESSURE SWITCH LOW
LSH	LEVEL SWITCH HIGH
LSL	LEVEL SWITCH LOW
LAH	LEVEL ALARM HIGH
LAL	LEVEL ALARM LOW
D	CONDENSATE DRAIN
A1A/B1A	150#/300# RATING
C1A/D1A	400#/600# RATING
LX/PX	PNEUMATIC/ ELECTRIC SIGNAL TRANSMITTER
FB	FULL BORE
SP	SAMPLER
NG	NATURAL GAS
V	VENT
AS	AUTO SAMPLER
CP	CORROSION PROBE
CC	CORROSION COUPON
AV	ACTUATED VALVE
SDV	SHUT DOWN VALVE
LV	LEVEL CONTROL VALVE
PV/PCV	PRESSURE CONTROL VALVE
FCV	FLOW CONTROL VALVE

00”–FLUID–00–00–A1A/B1A/C1A/D1A/D4A

- MATERIAL SPEC.
- LINE NO.
- UNIT NO.
- (P–NATURAL GAS)
- LINE SIZE (NOMINAL)

INDRADHANUSH GAS GRID LIMITED

मेकॉन लिमिटेड

MECON LIMITED

SECTION	OIL & GAS
LOCATION	DELHI
DESIGNED	
DRAWN	SUNIL
CHECKED AND VERIFIED	
APPROVED	SIG
	DATE

NORTH EAST GAS GRID (PHASE–1 P/L SECTION)

LEGEND / DRAWING SYMBOLS

SCALE : NTS | SHEET 1 OF 2 | REV 0

DRG. NO. MEC/23UU/05/28/M/000/0001

REFERENCES | DRG.NO.

REV.NO	DATE	ZONE	DESCRIPTION	BY	VERIFIED
			REVISION		

REV / SEC | INST. | CONCURRED BY

SECTION–2

DRG. NO. MEC/23UU/05/28/M/000/0001

SYMBOLS & ABBREVIATIONS

SYMBOLS

- SHUT-OFF VALVE, GENERAL
- SAFETY SHUT-OFF VALVE
- CONTINIUOUS-ACTION VALVE
- RIGHT-ANGLE SHUT-OFF VALVE, GENERAL
- THREE-WAY VALVE, GENERAL
- FOUR-WAY VALVE, GENERAL
- NEEDLE VALVE
- PUSHBUTTON VALVE
- CHECK VALVE (SPRING TYPE)
- NON RETURN VALVE (SWING TYPE)
- BUTTERFLY VALVE
- CONTINUOUSLY VARIABLE BORE BUTTERFLY VALVE
- LOUVRE
- SEPERATOR GENERAL
- 2 STAGE SEPERATOR
- CYCLONE SEPERATOR
- CONDENSATE TRAP
- FLOWMETER GENERAL
- METER GENERAL
- TURBINE METER
- VORTEX-SHEDDING FLOWMETER
- DIAPHRAGM METER
- MANUALLY OPERATED ACTUATOR, GENERAL
- DIAPHRAGM ACTUATOR
- PISTON ACTUATOR
- ELECTROMAGNETIC ACTUATOR
- HYDRAULIC OR PNEUMATIC ACTUATOR, GENERAL

SYMBOLS

- SPRING-OPERATED ACTUATOR
- AUTOMATICALLY OPERATED ACTUATOR, GENERAL
- ELECTRIC MOTOR-OPERATED ACTUATOR, GENERAL
- VALVE CLOSED ON FAILURE OF ACTUATING ENERGY
- VALVE OPENED ON FAILURE OF ACTUATING ENERGY
- VALVE RETAINS POSITION ON FAILURE OF ACTUATING ENERGY
- TURBINE, GENERAL
- COMPRESSOR, GENERAL
- ROTARY PISTON COMPRESSOR
- PISTON COMPRESSOR
- JET BOOSTER
- FAN, GENERAL
- HEAT EXCHANGER WITHOUT COUNTERFLOW
- COUNTERFLOW HEAT EXCHANGER
- PLATE HEAT EXCHANGER
- FINNED HEAT EXCHANGER WITH VENTILATOR
- BLIND PLATE
- "FIGURE 8" PLATE, BLIND PLATE IN FUNCTION
- "FIGURE 8" PLATE, GOGGLE PLATE IN FUNCTION
- ORIFICE PLATE
- INSULATING FLANGE
- INSULATING COUPLING
- STRAIGHTENING VANES
- RUPTURE DISK
- SIGHT GLASS. GENRAL
- EXPANSION JOINT
- SILENCER
- PULSATION DAMPENER
- MIXING NOZZLE
- CAP
- FLANGE CONNECTION

SYMBOLS

- FILTER, GENERAL
- GAS FILTER, GENERAL
- CARTRIDGE FILTER
- GAS SORPTION FILTER
- LIQUID FILTER, GENERAL
- "Y" TYPE STRAINER
- PRESSURE REDUCING VALVE, IN AUXILIARY AND CONTRAL FACILITIES
- PRESSURE CONTROL VALVE, GENERAL
- PROCESS PRIMARY LINE
- PROCESS SECONDARY LINE
- ELECTRIC LINE
- PNEUMATIC LINE
- CAPILLARY LINE
- INSTRUMENT LINE
- HEAT TRACING LINE
- JACKETED LINE
- JACKETED & HEATED LINE
- VENT STACK
- SCRAPPER TRAP
- LIQUID PUMP GENERAL
- CENTRIFUGAL PUMP
- LIQUID RING PUMP
- PISTON PUMP
- DIAPHRAGM PUMP
- CP — CORROSION PROBE
- CC — CORROSION COUPON

ABBREVIATIONS

ESD	EMERGRNCY SHUT-DOWN
EW	DRAIN
GCV	GAS-OPERATED CONTROL VALVE
GOV	GAS-OVER OIL OPERATED VALVE
HOV	HYDRAULIC-OPERATED VALVE
LC	LOCKED CLOSED
LO	LOCKED OPEN
LP	LOCKED POSITION
LPT	LOW POINT
MCV	MOTOR CONTROL VALVE
MH	MANHOLE
MOV	MOTOR-OPERATED VALVE
SV	SOLENOID VALVE
PCV	PRESSURE CONTROL VALVE
SAV SSV	SAFETY SHUT-OFF VALVE
SBV PRV	PRESSURE RELIFE VALVE
SP	SETPOINT
TE	THERMOCOUPLE
TW	THERMOWELL
NRV	NON-RETURN VALVE
CV	CHECK VALVE
FCV	FLOW CONTROL VALVE
PGS	POWER GAS SUPPLY
IAS	INTRUMENT AIR SUPPLY
NC	NORMAL CLOSED
NO	NORMAL OPEN

INDRADHANUSH GAS GRID LIMITED

मेकॉन लिमिटेड

MECON LIMITED

SECTION	OIL & GAS
LOCATION	DELHI
DESIGNED	
DRAWN	SUNIL
CHECKED AND VERIFIED	
APPROVED	SIG
	DATE

NORTH EAST GAS GRID (PHASE-1 P/L SECTION)

LEGEND / DRAWING SYMBOLS

SCALE : NTS | SHEET 2 OF 2 | REV 0

DRG. NO. MEC/23UU/05/28/M/000/0001

SECTION-2

REV / SEC	INST.				
	CONCURRED BY				

REV.NO	DATE	ZONE	DESCRIPTION	BY	VERIFIED
			REVISION		

REFERENCES | DRG.NO.

DRG. NO. MEC/23UU/05/28/M/001/0006

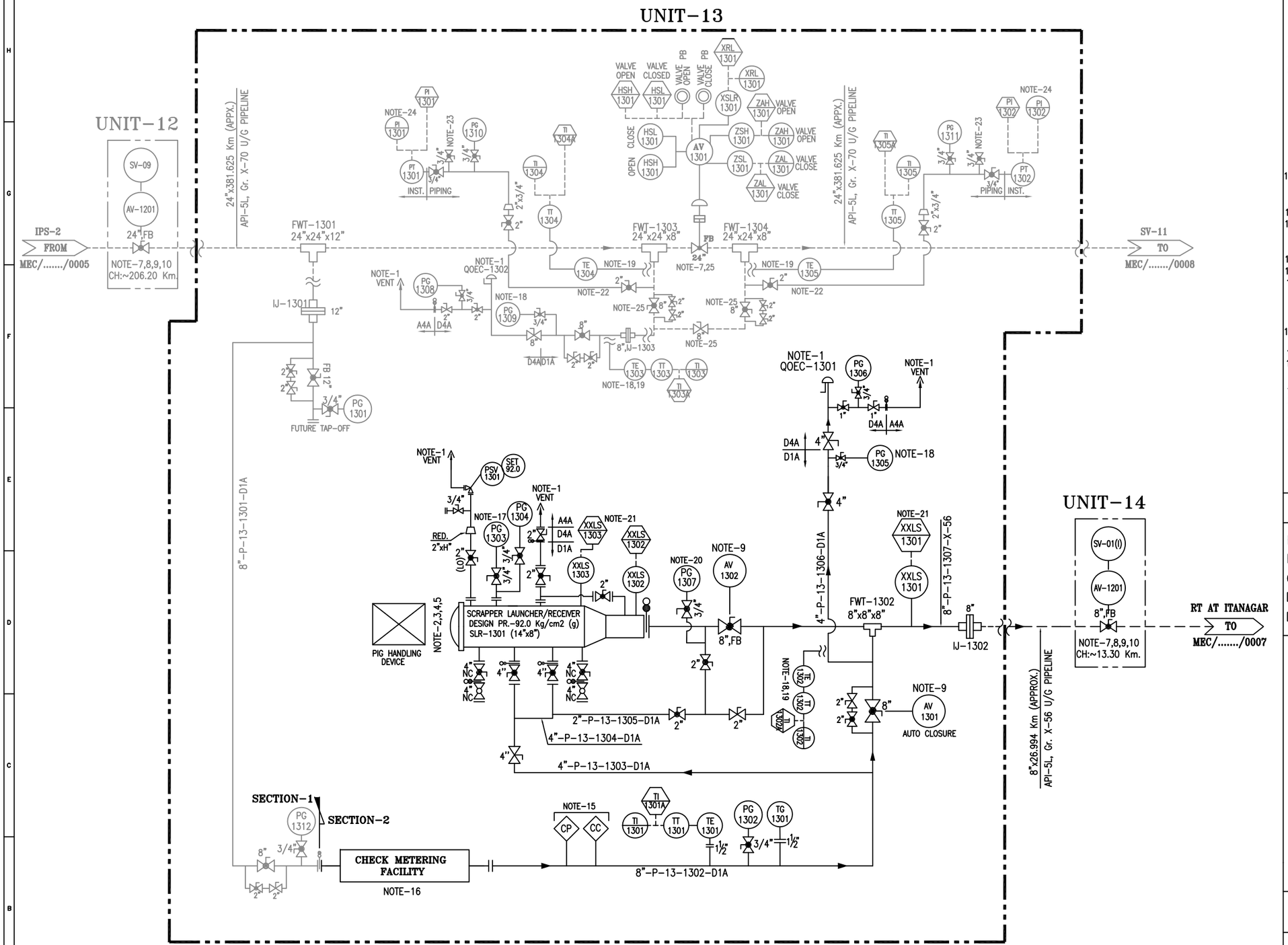

SV-10 CUM DISPATCH FACILITY FOR 8"NBX26.994 KMS. P/L TO RT ITANAGAR AT BARPHALONG GAON (CH. 219.692 KMS. (APPROX) FROM DT AT GUWAHATI (BAR PALAHA))

NOTES:

1. ALL VENTS SHALL BE LOCATED MIN. HEIGHT OF 3 MTR. ABOVE THE HIGHEST OPERATING LEVEL.
2. SCRAPPER LAUNCHER/RECEIVER SHALL HAVE SCRAPPER HANDLING FACILITY.
3. SCRAPPER LAUNCHER/RECEIVER SHALL BE SUITABLE FOR HANDLING INTELLIGENT PIGS.
4. SCRAPPER LAUNCHER/RECEIVER SHALL HAVE QUICK OPPENING CLOSURE.
5. SCRAPPER DOOR MECHANISM TO BE CONSTRUCTED SUCH THAT THE DOOR CAN NOT BE OPENED UNLESS SCRAPPER TRAP IS FULLY DEPRESSURISED.
6. GAS DETECTORS TO BE PROVIDED NEAR FILTERS, FLOW METERS & SCRAPPER TRAPS. SIGNAL FROM GAS DETECTOR TO BE TAKEN IN CONTROL ROOM.
7. ALL SV ARE EXTENDED STEM, BUTT WELDED END WITH FULLY WELDED BODY & FULL BORE BALL VALVE.
8. BURRIED VALVE SHALL BE PROVIDED WITH CORROSION PROTECTION COATING.
9. FOR SV, HOV & AV DETAIL REFER DRG. NO. MEC/23UU/05/28/M/001/0015 & /0016
10. LOCATION OF SV STATIONS AND THEIR CHAINAGES ARE AS PER PIPELINE SCHEMATIC ROUTE DIAGRAM. HOWEVER LOCATIONS OF SV MAY GET SLIGHTLY CHANGED AS PER AVAILABILITY OF PLOT TO M/s IGGL.
11. ALL BALL VALVES WITH BUTT WELDED END SHALL HAVE FULLY WELDED BODY.
12. ALL HIGHEST POINT & LOWEST POINT OF THE STATION PIPING SHALL BE PROVIDED WITH VENT & DRAIN FACILITY & SAME SHALL BE TAKEN CARE DURING PREPARATION OF GAD.
13. NOTE DELETED.
14. SUPPORT SHALL BE PROVIDED BEFORE & AFTER MAINLINE IJ.
15. ONLINE RETRIVEL TYPE CORROSION MONITORING COUPON AND CORROSION PROBE SHALL BE PROVIDED. FURTHER WHEREVER SCADA SYSTEM ARE AVAILABLE, THIS SYSTEM SHALL BE ONLINE SCADA COMPATIBLE OTHERWISE DATA SHALL BE COLLECTED BY OFFLINE DATA LOGGER.
16. CHECK METERING P&ID SHALL BE PROVIDED SEPARATELY. SAME SHALL BE BI-DIRECTIONAL.
17. PG-1303 SHALL HAVE A RANGE OF 0-1 KG/CM2(g) WITH A GAUGE SAVER.
18. DEPRESSURIZATION VALVE SHALL BE LOCATED IN SUCH A WAY THAT PG-1305 & TI-1302 CAN BE READ DURING VENTING. 1"/2" VALVE ON VENT LINE OF THE QOEC LINE SHALL BE APPROCHABLE FOR OPERATION.
19. DIRECT SURFACE CONTACT TYPE.
20. PG-1307 SHALL HAVE A RANGE OF 0-5 KG/CM2(G) WITH A GAUGE SAVER & LEAST COUNT OF 0.1 KG/CM2(G).
21. ALL PIG SIGNALLER SHALL BE OF NON-INTRUSIVE TYPE.
22. NOTE DELETED.
23. NOTE DELETED.
24. NOTE DELETED.
25. NOTE DELETED.

PROCESS DATA

FLUID: NATURAL GAS(DRY)/RLNG	TEMPERATURE
FLOW: - MMSCMD (APPX.)	WORKING : 0°-55° C
OPER. PRESS.: - KG/CM2(G)	DESIGN -29 TO 65°C
DESIGN PRESS.: 92 KG/CM2(G)	
DESIGN CLASS: 600#	

LINE LEGEND

- PROPOSED LINE A/G
- PROPOSED LINE U/G
- LINE A/G (OTHER'S SCOPE)
- LINE U/G (OTHER'S SCOPE)

24"-P-01-0101-D1A
8"-P-01-0101-D1A

- MATERIAL SPEC.
- LINE NO.
- UNIT NO.
- PROCESS FLUID (NG/RLNG)
- LINE SIZE (NOMINAL)

VALVE LEGEND

- BALL VALVE FLANGE END
- BALL VALVE BW END/UPTO 1 1/2" SW END.
- PLUG VALVE BW END/UPTO 1 1/2" SW END.
- PLUG VALVE FLANGE END
- GLOBE VALVE.

INDRADHANUSH GAS GRID LIMITED

मेकॉन लिमिटेड

MECON LIMITED

REV	DATE	ZONE	DESCRIPTION	BY	VERIFIED
1	18.03.20		AS PER REVISED SCHEMATIC/ GENERAL REVISION	RASHMI	AKB
0	26.08.19		AS PER REVISED SCHEMATIC/ GENERAL REVISION	UMAR	AKB
A	10.05.19		FOR COMMENT PURPOSE	UMAR	AKB

REVISION

REreferences	DRG.NO.
PIPELINE SCHEMATIC ROUTE DIAGRAM	MEC/23UU/05/28/M/000/0021 , REV - 2

SECTION	OIL & GAS
LOCATION	DELHI
DESIGNED	UMAR
DRAWN	UMAR
CHECKED AND VERIFIED	AKB
APPROVED	SIG A. GANGAL
DATE	04.09.20

NORTH EAST GAS GRID (PHASE-1 P/L SECTION)

P & ID FOR SV-09, SV-01(I) & SV-10 CUM DISPATCH FACILITY FOR 8"NBX26.994 KMS. P/L TO RT ITANAGAR

SCALE : NTS

DRG. NO. MEC/23UU/05/28/M/001/0006

REV 1

REV / SEC		
	PIPING	
	ELEC.	
	INST.	
	CONCURRED BY	

SECTION-2

DRG. NO. MEC/23UU/05/28/M/001/0007

UNIT-15

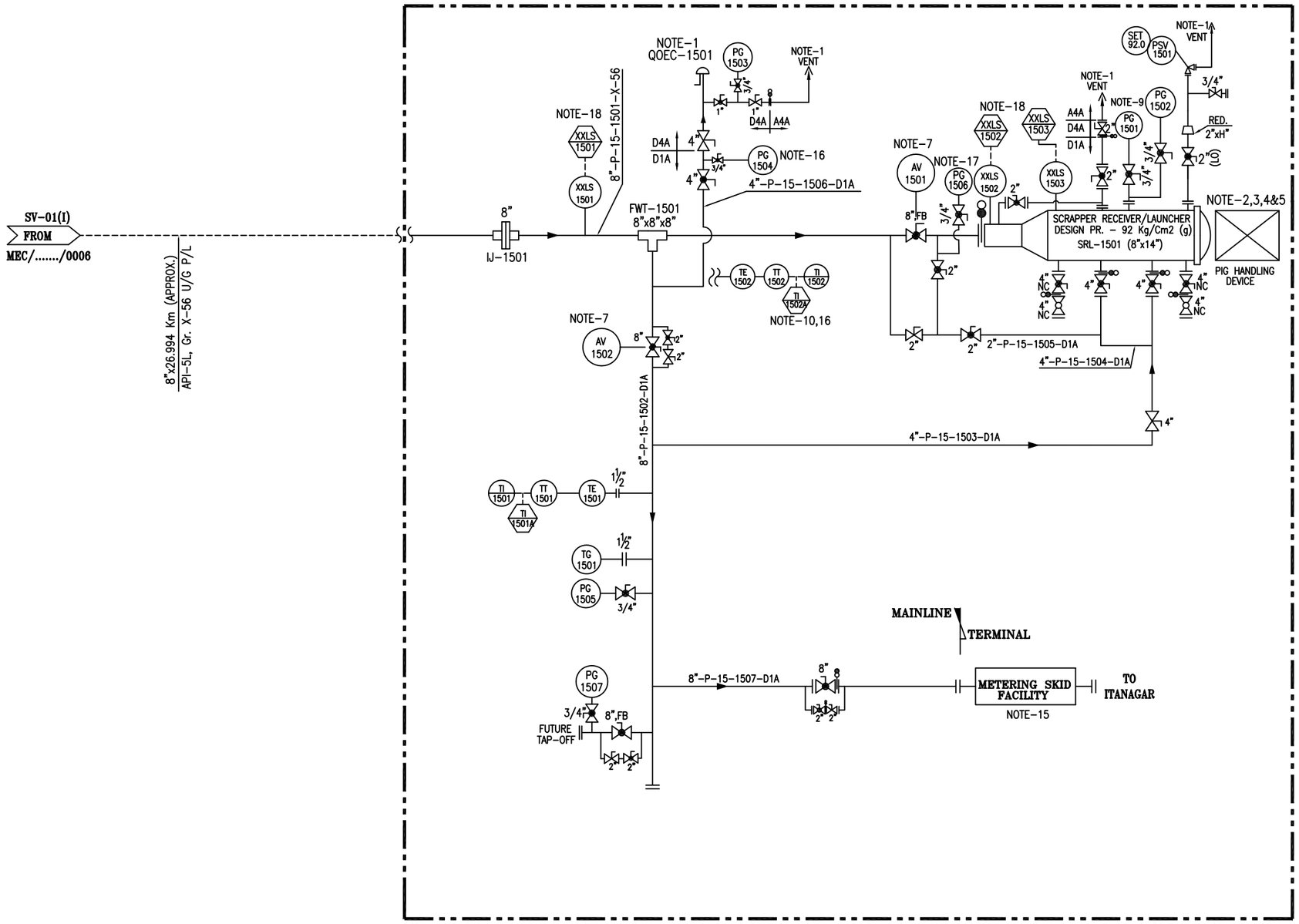

RECEIVING TERMINAL AT ITANAGAR
(CH. ~26.994 KMS. FROM SV-10 CUM DT FOR ITANAGAR)

NOTES:

1. ALL VENTS SHALL BE LOCATED MIN. HEIGHT OF 3 MTR. ABOVE THE HIGHEST OPERATING LEVEL.
2. SCRAPPER LAUNCHER/RECEIVER SHALL HAVE SCRAPPER HANDLING FACILITY.
3. SCRAPPER LAUNCHER/RECEIVER SHALL BE SUITABLE FOR HANDLING INTELLIGENT PIGS.
4. SCRAPPER LAUNCHER/RECEIVER SHALL HAVE QUICK OPPENING CLOSURE.
5. SCRAPPER DOOR MECHANISM TO BE CONSTRUCTED SUCH THAT THE DOOR CAN NOT BE OPENED UNLESS SCRAPPER TRAP IS FULLY DEPRESSURISED.
6. GAS DETECTORS TO BE PROVIDED NEAR FILTERS, FLOW METERS & SCRAPPER TRAPS. SIGNAL FROM GAS DETECTOR TO BE TAKEN IN CONTROL ROOM.
7. FOR SV, HOV & AV DETAIL REFER DRG. NO. MEC/23UU/05/28/M/001/0015 & /0016
8. NOTE DELETED.
9. PG-1501 SHALL HAVE A RANGE OF 0-1 KG/CM2(g) WITH A GAUGE SAVER.
10. DIRECT SURFACE CONTACT TYPE.
11. ALL BALL VALVES WITH BUTT WELDED END SHALL HAVE FULLY WELDED BODY.
12. ALL HIGHEST POINT & LOWEST POINT OF THE STATION PIPING SHALL BE PROVIDED WITH VENT & DRAIN FACILITY & SAME SHALL BE TAKEN CARE DURING PREPARATION OF GAD.
13. NOTE DELETED.
14. SUPPORT SHALL BE PROVIDED BEFORE & AFTER MAINLINE IJ.
15. CUSTODY TRANSFER METERING SKID P&ID SHALL BE PROVIDED SEPARATELY.
16. DEPRESSURIZATION VALVE SHALL BE LOCATED IN SUCH A WAY THAT PG-1504 & TI-1502 CAN BE READ DURING VENTING. 1" VALVE ON VENT LINE OF THE QOEC LINE SHALL BE APPROCHABLE FOR OPERATION.
17. PG-1506 SHALL HAVE A RANGE OF 0-5 KG/CM2(G) WITH A GAUGE SAVER & LEAST COUNT OF 0.1 KG/CM2(G).
18. ALL PIG SIGNALLER SHALL BE OF NON-INTRUSIVE TYPE.

PROCESS DATA

FLUID: NATURAL GAS(DRY)/RLNG	TEMPERATURE
FLOW: - MMSCMD (APPX.)	WORKING : 0°-55° C
OPER. PRESS.: - KG/CM2(G)	DESIGN : -29 TO 65°C
DESIGN PRESS.: 92 KG/CM2(G)	
DESIGN CLASS: 600#	

LINE LEGEND

——— PROPOSED LINE A/G
------ PROPOSED LINE U/G

8"-P-15-1501-D1A
- MATERIAL SPEC.
- LINE NO.
- UNIT NO.
- PROCESS FLUID (NG/RLNG)
- LINE SIZE (NOMINAL)

VALVE LEGEND

- BALL VALVE FLANGE END
- BALL VALVE BW END/UPTO 1½" SW END.
- PLUG VALVE BW END/UPTO 1½" SW END.
- PLUG VALVE FLANGE END
- GLOBE VALVE.

INDRADHANUSH GAS GRID LIMITED

मेकॉन लिमिटेड

MECON LIMITED

REV	DATE	ZONE	DESCRIPTION	BY	VERIFIED
1	18.03.20		AS PER REVISED SCHEMATIC/ GENERAL REVISION	RASHMI	AKB
0	26.08.19		AS PER REVISED SCHEMATIC/ GENERAL REVISION	UMAR	AKB
A	10.05.19		FOR COMMENT PURPOSE	UMAR	AKB

REFERENCES	DRG.NO.
PIPELINE SCHEMATIC ROUTE DIAGRAM	MEC/23UU/05/28/M/000/0021 , REV - 2

SECTION	OIL & GAS
LOCATION	DELHI
DESIGNED	UMAR
DRAWN	UMAR
CHECKED AND VERIFIED	AKB
APPROVED	SIG A. GANGAL
	DATE 04.09.20

NORTH EAST GAS GRID (PHASE-1 P/L SECTION)

P&ID FOR RECEIVING TERMINAL FOR 8"NBx26.994 KMS. P/L AT ITANAGAR

SCALE : NTS

DRG. NO. MEC/23UU/05/28/M/001/0007 REV 1

SECTION-2

REV / SEC	
	PIPING
	ELEC.
	INST.
	CONCURRED BY

DRG. NO. MEC/23UU/05/28/M/001/0015

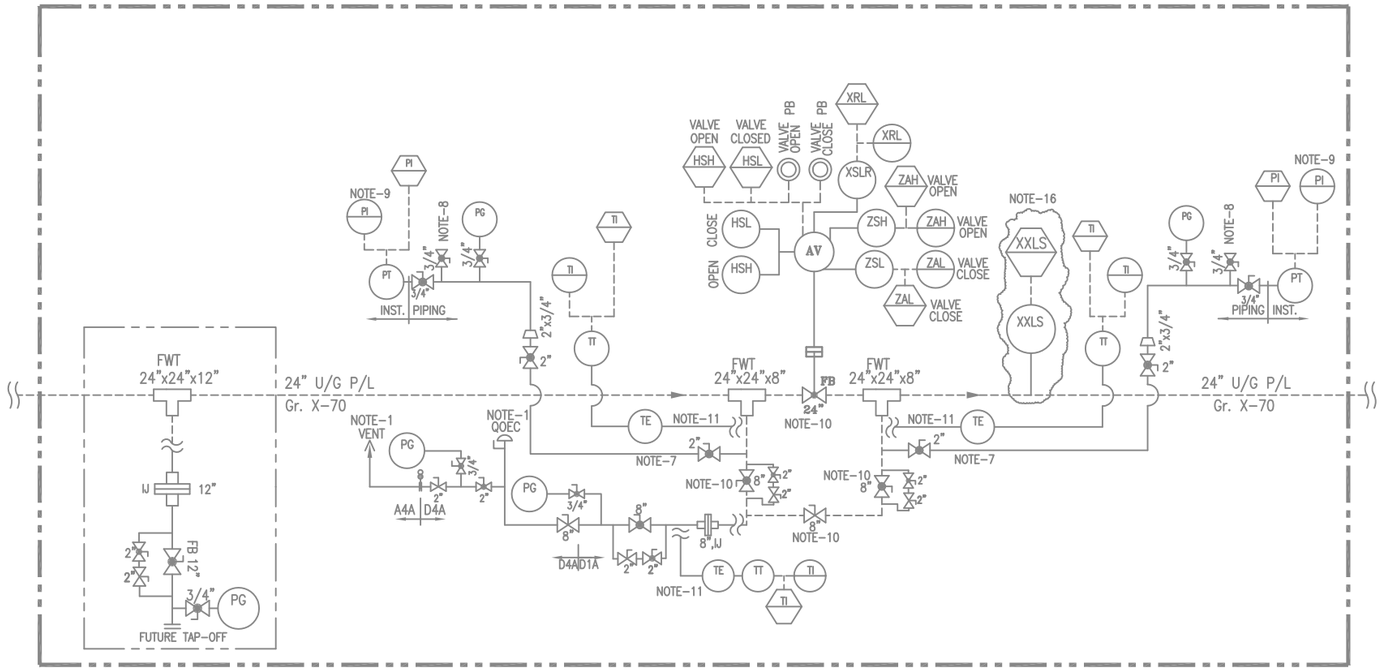

TYPICAL ARRANGEMENT FOR 24" SV (REMOTE OPERATED)

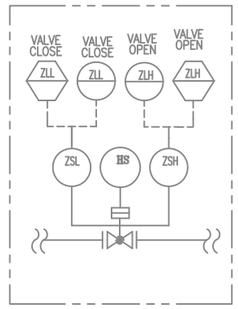

TYPICAL HOV ARRANGEMENT

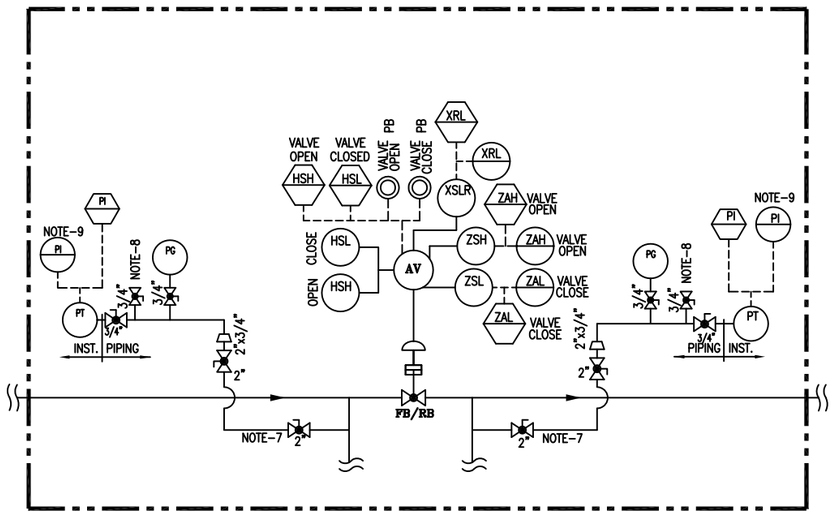

TYPICAL ARRANGEMENT FOR AV

NOTE:-

1. ALL VENT SHALL BE LOCATED MIN. HEIGHT OF 3 MTR. ABOVE THE HIGHEST OPERATING LEVEL.
2. NOTE DELETED.
3. ALL AV (ACTUATED VALVES) SHALL BE FAILED TO STAY PUT TYPE VALVE.
4. NOTE DELETED.
5. NOTE DELETED.
6. NOTE DELETED.
7. ALL PG, PT CONNECTION SHALL BE TAKEN FROM 2" TWO ISOLATION VALVES AND THEN AFTER IT SHOULD BE CONVERTED TO REQUIRE NPT CONNECTION.
8. GAS TAPPING FOR VALVE ACTUATOR.
9. FOR PG & PT DETAIL REFER MECON STANDARD DRG.
10. NOTE DELETED.
11. NOTE DELETED.
12. ALL BALL VALVES WITH BUTT WELDED END SHALL HAVE FULLY WELDED BODY.
13. ALL HIGHEST POINT & LOWEST POINT OF THE STATION PIPING SHALL BE PROVIDED WITH VENT & DRAIN FACILITY & SAME SHALL BE TAKEN CARE DURING PREPARATION OF GAD.
14. NOTE DELETED.
15. NOTE DELETED.
16. NOTE DELETED.

LINE LEGEND

- PROPOSED LINE A/G
- PROPOSED LINE U/G
- LINE A/G (OTHER'S SCOPE)
- LINE U/G (OTHER'S SCOPE)

VALVE LEGEND

- BALL VALVE FLANGE END
- BALL VALVE BW END/UPTO 1½" SW END.
- PLUG VALVE BW END/UPTO 1½" SW END.
- PLUG VALVE FLANGE END
- GLOBE VALVE.

INDRADHANUSH GAS GRID LIMITED

मेकॉन लिमिटेड

MECON LIMITED

REV / SEC		
	PIPING	
	ELEC.	
	INST.	
	CONCURRED BY	

SECTION-2

REV.NO	DATE	ZONE	DESCRIPTION	BY	VERIFIED
0	26.08.19		AS PER REVISED SCHEMATIC/ GENERAL REVISION	UMAR	AKB
1	10.05.19		FOR COMMENT PURPOSE	UMAR	AKB

REVISION

REFERENCES	DRG.NO.
PIPELINE SCHEMATIC ROUTE DIAGRAM	MEC/23UU/05/28/M/000/0021, REV – 2

SECTION	OIL & GAS
LOCATION	DELHI
DESIGNED	UMAR
DRAWN	UMAR
CHECKED AND VERIFIED	AKB
APPROVED SIG	A. GANGAL
DATE	04.09.20

NORTH EAST GAS GRID (PHASE-1 P/L SECTION)

TYPICAL ARRANGEMENT FOR AV

SCALE : NTS

DRG. NO. MEC/23UU/05/28/M/001/0015

REV 0

DRG. NO. MEC/23UU/05/28/M/001/0016

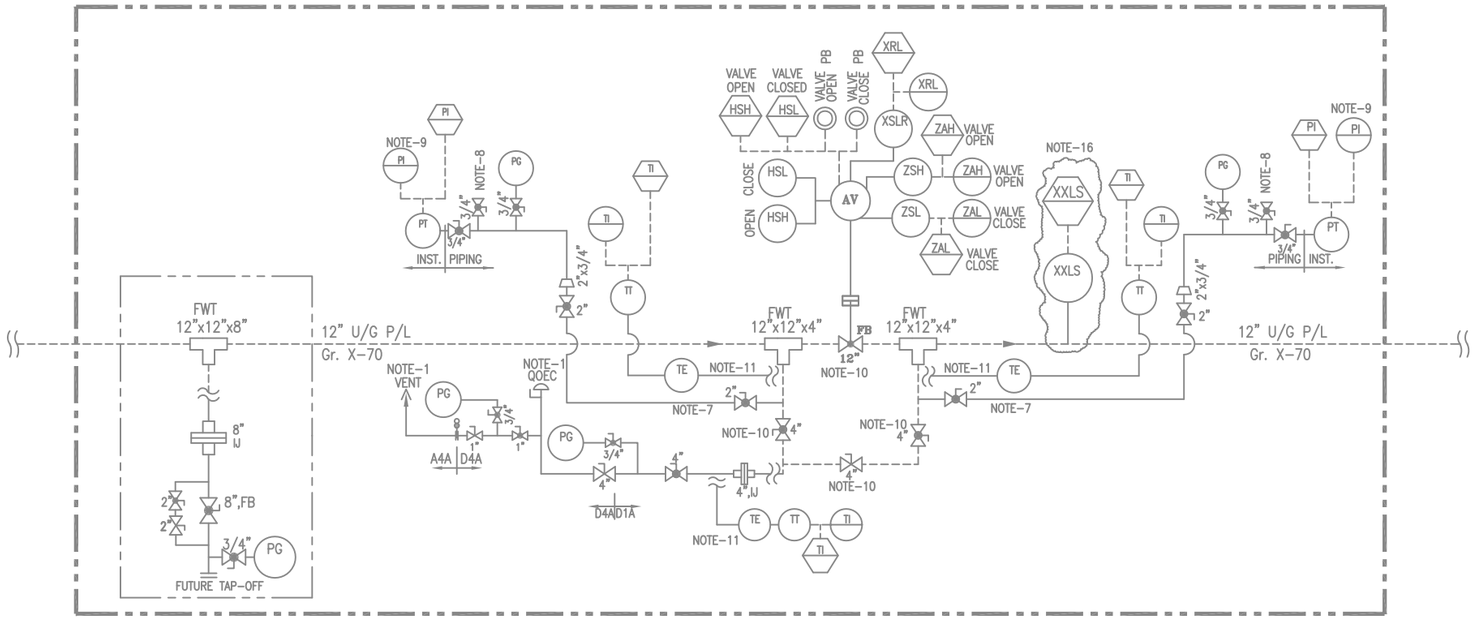

TYPICAL ARRANGEMENT FOR 12" SV (REMOTE OPERATED)

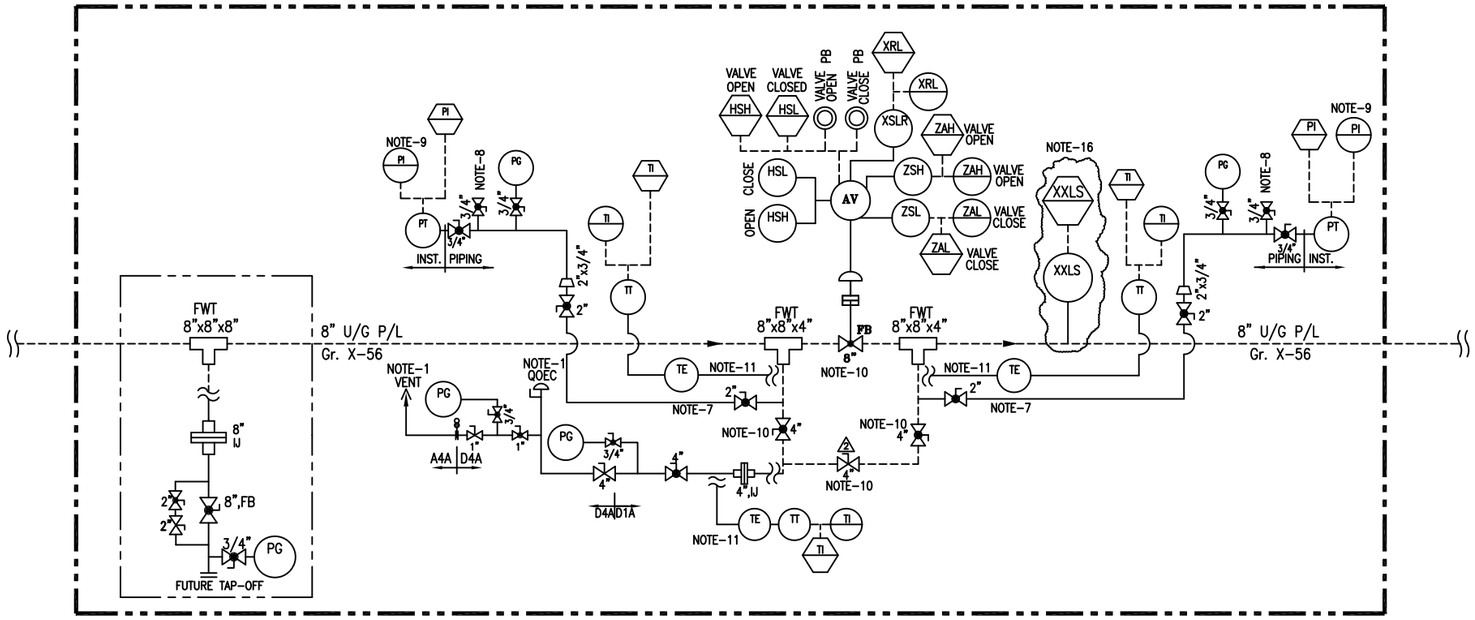

TYPICAL ARRANGEMENT FOR 8" SV (REMOTE OPERATED)

NOTE:-

1. ALL VENT SHALL BE LOCATED MIN. HEIGHT OF 3 MTR. ABOVE THE HIGHEST OPERATING LEVEL.
2. NOTE DELETED.
3. ALL AV (ACTUATED VALVES) SHALL BE FAILED TO STAY PUT TYPE VALVE.
4. NOTE DELETED.
5. NOTE DELETED.
6. NOTE DELETED.
7. ALL PG, PT CONNECTION SHALL BE TAKEN FROM 2" TWO ISOLATION VALVES AND THEN AFTER IT SHOULD BE CONVERTED TO REQUIRE NPT CONNECTION.
8. GAS TAPPING FOR VALVE ACTUATOR.
9. FOR PG & PT DETAIL REFER MECON STANDARD DRG.
10. EXTENDED STEM VALVE.
11. DIRECT SURFACE CONTACT TYPE.
12. ALL BALL VALVES WITH BUTT WELDED END SHALL HAVE FULLY WELDED BODY.
13. ALL HIGHEST POINT & LOWEST POINT OF THE STATION PIPING SHALL BE PROVIDED WITH VENT & DRAIN FACILITY & SAME SHALL BE TAKEN CARE DURING PREPARATION OF GAD.
14. NOTE DELETED.
15. SUPPORT SHALL BE PROVIDED BEFORE & AFTER MAINLINE IJ.
16. NON-INTRUSIVE TYPE PIG SIGNALLER TO BE INSTALLED AT FIRST & LAST SV STATION BEFORE EACH INTERMEDIATE PIGGING STATION/RECEIVING STATION.

LINE LEGEND

- PROPOSED LINE A/G
- PROPOSED LINE U/G
- LINE A/G (OTHER'S SCOPE)
- LINE U/G (OTHER'S SCOPE)

VALVE LEGEND

- BALL VALVE FLANGE END
- BALL VALVE BW END/UPTO 1 1/2" SW END.
- PLUG VALVE BW END/UPTO 1 1/2" SW END.
- PLUG VALVE FLANGE END
- GLOBE VALVE.

INDRADHANUSH GAS GRID LIMITED

मेकॉन लिमिटेड

MECON LIMITED

REV	DATE	ZONE	DESCRIPTION	BY	VERIFIED
2	04.09.20		AS PER REQUIREMENT	UMAR	AKB
1	18.03.20		AS PER REVISED SCHEMATIC/ GENERAL REVISION	RASHMI	AKB
0	26.08.19		AS PER REVISED SCHEMATIC/ GENERAL REVISION	UMAR	AKB
A	10.05.19		FOR COMMENT PURPOSE	UMAR	AKB

REVISION

REFERENCES	DRG.NO.
PIPELINE SCHEMATIC ROUTE DIAGRAM	MEC/23UU/05/28/M/000/0021 , REV – 2

SECTION	OIL & GAS
LOCATION	DELHI
DESIGNED	UMAR
DRAWN	UMAR
CHECKED AND VERIFIED	AKB
APPROVED	SIG A. GANGAL
	DATE 04.09.20

NORTH EAST GAS GRID (PHASE-1 P/L SECTION)

TYPICAL ARRANGEMENT FOR 8"SV STATION (REMOTE OPERATED)

SCALE : NTS

DRG. NO. MEC/23UU/05/28/M/001/0016

REV 2

REV / SEC	PIPING	ELEC.	INST.	CONCURRED BY

SECTION-2