INDRADHANUSH GAS GRID LIMITED (IGGL)
(Joint Venture of IOCL, ONGC, GAIL, OIL and NRL)
GUWAHATI, ASSAM

NORTH -EAST GAS GRID PIPELINE PROJECT (PHASE-1)
PIPELINE SECTION 1, 2, 3, 5 & 9

BID DOCUMENT FOR PROCUREMENT

OF

INSULATING JOINTS

OPEN DOMESTIC COMPETITIVE BIDDING

Tender No.: 05/51/23VC/IGGL/009

VOLUME – II OF II

Visit: www.tenderwizard.com/MECON
(**Tenderwizard helpdesk:** 011-49424365)

PREPARED AND ISSUED BY

MECON LIMITED
(A Govt. of India Undertaking)
Delhi, India

CONTENTS

TECHNICAL – VOLUME II OF II

1.	Section - I	:	Material Requisition
2.	Section - II	:	Technical Specification
3.	Section - III	:	Datasheets of Insulating Joints
4.	Section - IV	:	QAP for Manufacturing of Insulating Joints

SECTION - I

MATERIAL REQUISITION

MR DOCUMENT NO. : MEC/23VC/05/28/M/000/S009, Rev. 0

PROJECT : NORTH -EAST NATURAL GAS GRID PIPELINE PROJECT (SECTIONS – 1, 2, 3, 5 & 9)

CLIENT : INDRADHANUSH GAS GRID LIMITED

ITEM : INSULATING JOINTS

TENDER DOC. NO. : 05/51/23VC/IGGL/009

MATERIAL REQUISITION

SCOPE OF SUPPLY :

The scope of supply includes but not limited to Design, Engineering, Manufacture & Fabrication, Procurement of Materials and bought out components, assembly at shop, inspection, testing at manufacturer's works, preparation of shipment / packing, transport / delivery, Unloading and stacking at owner's store in the states of Assam, Arunachal & Tripura as per tender terms & conditions of Tender. **INSULATING JOINTs shall be** suitable for passing intelligent pigs & other cleaning / displacement / gauging pigs. Scope of supply shall include supply of all documentation as per the Material Requisition, Notes to Material Requisition, Data sheet, MECON's Standard specifications etc. and other codes and standards attached or referred.

The description and quantities of Insulating Joints are detailed below :

MR Item No.	Description	Total Qty. (Nos.)	*Section-wise Qty. (Nos.)				
			Section-1	Section-2	Section-3	Section-5	Section-9
1.	Monolithic INSULATING JOINTS, Size 24" (Inches), ANSI Class 600# as per Data Sheet No. MEC/23VC/05/21/M/000/DS-009-01	**08**	08	0	0	0	0
2.	Monolithic INSULATING JOINTS, Size 18" (Inches), ANSI Class 600# as per Data Sheet No. MEC/23VC/05/21/M/000/DS-009-02	**02**	0	0	02	0	0
3.	Monolithic INSULATING JOINTS, Size 12" (Inches), ANSI Class 600# as per Data Sheet No. MEC/23VC/05/21/M/000/DS-009-03	**28**	16	0	06	04	02
4.	Monolithic INSULATING JOINTS, Size 8" (Inches), ANSI Class 600# as per Data Sheet No. MEC/23VC/05/21/M/000/DS-009-04	**24**	16	03	0	05	0
5.	Monolithic INSULATING JOINTS, Size 6" (Inches), ANSI Class 600# as per Data Sheet No. MEC/23VC/05/21/M/000/DS-009-05	**05**	0	0	05	0	0
6.	Monolithic INSULATING JOINTS, Size 4" (Inches), ANSI Class 600# as per Data Sheet No. MEC/23VC/05/21/M/000/DS-009-06	**07**	0	01	0	06	0

***Delivery Locations (States):**

Section-1: Assam
Section-2: Assam/ Arunachal Pradesh
Section-3: Assam/ Tripura
Section-5: Tripura
Section-9: Tripura

Exact Delivery Location / Destination for each section in respective states shall be provided to the successful bidder.

Notes:

1. **Material Delivery Requirements:** The finished material are to be delivered by the supplier at the designated store stated above. The supplier shall be responsible for all handling and transportation from their production plant to the designated delivery point in accordance with this specification.

2. **Compliance with Specification:** The Vendor shall be completely responsible for the design, materials, manufacture & fabrication, testing, inspection, preparation for shipment and transport of the above equipment strictly in accordance with the MR and all attachment thereto. All items shall be provided with EN 10204-3.2 certificates.

3. **Vendor's Scope:** Vendor scope of work includes the equipment with all internals and accessories shown on the datasheets, specifications and all unmentioned parts necessary for a satisfactory operation and testing except those which are indicated to be out of the vendor's supply.

4. **Inspection:**
"The Successful Vendor shall propose minimum four (4) nos. of TPIA's from the below listed TPIA's along with QAP submission. IGGL/MECON shall approve any one TPIA out of the four (4) nos. proposed TPIA's. The Successful Vendor shall appoint the approved TPIA for inspection purpose and mention name of the approved TPIA in QAP.

   i. Det Norske Veritas (DNV)
   ii. Germanischer Lloyd
   iii. Bureau Veritas
   iv. Moody International
   v. SGS

vi. Certification Engineer International Ltd(CEIL)

vii. Technische Ulierwachungs Verein (TUV)

viii. Velosi

ix. American Bureau Services (ABS)

x. AB-Vincotte

xi. Lloyd Register of Industrial Services

xii. Meenar Global

xiii. VCS Quality Services Private Limited

Apart from inspection by TPIA, inspection shall also be performed by MECON / IGGL's delegate, as set out and specified in the codes and particular documents forming this MR.

5.0 DOCUMENTS & DATA REQUIREMENTS

5.1 The table hereunder specifies the quantities and the nature of the documents to be submitted by the Vendor to Purchaser.

5.1.1 The documents required at the inquiry stage and to be included in the bid are listed under column A of table below under note no. 5.6.

5.1.2 The documents required after award of the Contract and subject to the written approval of the Purchaser are listed under column B of table below under note no. 5.6.

5.1.3 The final and certified documents are listed under column C of table below under note no. 5.6.

5.2 Any document, even when preliminary, shall be binding and therefore duly identified and signed by the Vendor. It shall bear the Purchaser's Project reference, the Material Requisition number and the identification number.

5.3 The drawings/documents shall be reviewed, checked, approved and duly signed/stamped by successful Bidder/supplier before submission. Revision number shall be changed during submission of the revised successful Bidder/supplier documents and all revisions shall be highlighted by clouds. Whenever the successful Bidder/supplier require any sub-supplier drawings to be reviewed by MECON, the same shall be submitted by the supplier after duly reviewed, approved and stamped by the successful Bidder/supplier. Direct submission of the sub-supplier's drawings without contractor's approval shall not be entertained.

5.4 Review/Approval of the successful Bidder/supplier drawings by MECON would be only to review the compatibility with basic designs and concepts and in no way absolve the successful Bidder/supplier of his responsibility/contractual obligation to comply with PR

requirements, applicable codes, specifications and statutory rules/regulations. Any error/deficiency noticed during any stage of manufacturing/execution/installation shall be promptly corrected by the successful Bidder/supplier without any extra cost or time, whether or not comments on the same were received from MECON during the drawing review stage.

5.5 The successful Bidder/ Supplier shall submit a prerecorded Training CDs/DVDs and it shall comprise the basic theories and fundamentals, related standards, design parameters, manufacturing & inspection methods, operating & maintenance instructions and other relevant details. The CDs/DVDs shall have to be self-contained, user-friendly using animation/videos and other multimedia techniques.

5.6 THE DOCUMENTS ARE FULLY PART OF THE SUPPLY WHICH SHALL BE COMPLETE ONLY IF AND WHEN THE DOCUMENTS COMPLYING FULLY WITH THE MATERIAL REQUISITION REQUIREMENTS ARE RECEIVED BY THE PURCHASER.

Item	Documents & Data	A	B		C	
		No. of Copies	No. of Copies	Required Date (from FOI)	No. of Copies	Required Date (before Despatch)
1.	Completed Data Sheets	3	3	1 Week	3	2 Weeks (with final technical file)
2.	Drawing / Data Submittal list / schedule	-	3	2 Weeks + monthly	3	2 Weeks
3.	Fabrication, test and delivery schedule (per item)	3	3	2 Weeks + monthly	3	2 Weeks
4.	Progress Report	-	3	2 Weeks + monthly	3	2 Weeks
5.	Catalogues / References	3	-	-	3	With final technical file

Item	Documents & Data	A	B		C	
		No. of Copies	No. of Copies	Required Date (from FOI)	No. of Copies	Required Date (before Despatch)
6.	GA drawings + Sectional drawings + Material specification + Unit weight. + Unit volume + Package dimensions per unit	3	3	2 Weeks	3	With final technical file
7.	Design calculations for pressure containing parts	3	3	1 Week	3	2 Weeks (with final technical file)
8.	Bill of materials (on drawings)	3	3	1 Week	3	2 Weeks (with final technical file)
9.	Welding procedure specification and records WPS / PQR	-	3	1 Week	3	2 Weeks (with final technical file)
10.	QA / QC program	3	3	1 Week	3	2 Weeks (with final technical file)
11.	Inspection and Test Procedures along with Quality Assurance Plan	3	3	1 Week	3	2 Weeks (with final technical file)
12.	Test Reports	-	-	-	3	2 Weeks (with final technical file)
13.	NDE / NDT Reports	-	-	-	3	2 Weeks (with final technical file)
14.	Heat Treatment	-	-	-	3	2 Weeks (with final

Item	Documents & Data	A	B		C	
		No. of Copies	No. of Copies	Required Date (from FOI)	No. of Copies	Required Date (before Despatch)
	Reports					technical file)
15.	Hydrotest and air test report	-	-	-	3	2 Weeks (with final technical file)
16.	Maintenance and operating manuals	-	-	-	3	2 Weeks (with final technical file)
17.	Installation instructions & Site inspection procedure	-	-	-	3	2 Weeks (with final technical file)
18.	Material certificate as per EN 10204 - 3.2	-	-	-	3	2 Weeks (with final technical file)
19.	Painting system description & procedure	3	3	1 week	3	2 Weeks (with final technical file)
20.	List of sub-vendors with their scope	3	3	1 week	-	-
21.	Training CDs/DVDs covering design, operation & maintenance	-	-	-	3	2 Weeks (with final technical file)
22.	Final technical file, preliminary copy for approval (in soft & hardcopy)	-	3	2 weeks before Dispatch/ shipping	-	-
23.	Final technical file (in soft & hardcopy)	-	-	-	3	Before shipping

Item	Documents & Data	A	B		C	
		No. of Copies	No. of Copies	Required Date (from FOI)	No. of Copies	Required Date (before Despatch)

NOTES

I. In case of e-bids, only single copy of documents / drawings / data under column A need be uploaded.

II. Durations in column B (required date) are weeks after FOI/FOA or as indicated in Table.

a. Durations in column C (required date) are weeks after document approval or as indicated in Table.
b. Due date of each document may be proposed.

III. Final technical file shall be supplied in hard copy as indicated and in electronic format (.pdf Acrobat files) on six (6) CD-ROMs.

The above documents & data requirements shall also be supplemented by all requirements of clause 9.0 of MECON's T.S. No. MEC/TS/05/21/009, R-0. Edition-1.

6. Packaging & Transport:

6.1 Welding ends of IJs shall be blanked on each end by high impact plastic bevel protectors, so that bevels are protected from possible mechanical damage during transportation.

6.2 IJs shall be packed and transported in boxes of wood/plywood only. Packing shall be strong and sturdy such that it can withstand loading/unloading, pushing and crane lifting etc. All packaging shall be done in such a manner as to reduce volume and weight as much as possible without jeopardizing the safety of the material. All packing materials shall be new.

6.3 Stacking of multiple IJs in single box is permitted up to 4" NB. However, in such case suitable partitions are to be made inside packing box. Each box shall be clearly marked with the identification of IJs packed in that box.

6.4 Boxes shall be suitably fastened to the truck/trailer bed by means of ropes, tapes etc. Lifting location shall be clearly marked on each box.

6.4 It is sole responsibility of the vendor to pack, transport and load/unload the IJs to the designated locations safely and as per the transport regulations. No claim shall be entertained by the owner on account of any damage to the IJs during transport and loading/unloading.

7. Vendor shall establish the equivalence/superiority of any material proposed (With justification of material properties and availability) other than that specified in Datasheet. Vendor shall also indicate the ASTM equivalent of his proposed material as well as of all the AISI designated materials specified in datasheets.

8. Vendors to note that for minimum inspection and testing requirement of the supplied item shall be governed by attached QAP with this MR. However; Vendor shall submit their QAP for Approval covering the requirement specified in attached QAP.

9. Bidders to note that all the documents/drawings submitted by them as a part of bid shall be considered only to assess Bidder's technical capability and shall in no way absolve them from complying with all the requirements of the Tender. All items to be supplied by the Bidder shall be strictly in accordance with tender requirements.

10. In the event of Conflict/inconsistency among the documents attached/ referred, the following order of precedence generally shall govern in interpretation of various requirements / data.

- Material / Purchase Requisition
- Datasheets
- Technical Specification
- Codes and Standards
- Vendor's Standards

However, Owner/Consultant reserves the right to consider most stringent requirement among the document attached / referred.

11. Bidder / Supplier shall submit hard copies of all documents / drawings to MECON as listed in column B & C of table for document and data requirement under clause 5.0 of MR and also in all technical specifications. The date of receipt of these documents / drawings at MECON shall be deemed as the date of submission. If any documents/ drawings require re-submission due to error / deficiency noticed during review / approval stage, in that event the additional time required by the bidder/supplier to get the revised document/drawing reviewed / approved by MECON shall be solely to bidder's / supplier's account and in no case the bidder / supplier shall be entitled for any time or cost benefit.

12. Bidders to note that the Insulating Joints supplied by them shall be capable to withstand the field hydro test pressure (i.e., 1.5 times of design pressure) for 6 to 24 hours test holding duration under field / site conditions. The Insulating Joints shall be kept for entire test duration and test medium will be non-corrosive water. The vendor shall be liable for replacement of Insulating Joints if found faulty during site hydro test at his risk & cost. All cost for associated activities like packaging, transportation, etc. in connection to replacement of Insulating Joints shall be borne by the bidder. No claim shall be entertained by the Owner/Purchaser in this regard.

13. Following clauses, in addition to requirement specified in the TS shall also be complied to. Reference clause no. of TS and corresponding sl. No. of notes are mentioned below.
Sl. No. 1,2 & 4 mentioned below shall be complied in addition to requirement specified in Cl. 3.0 of T.S. No. MEC/TS/05/21/009, Rev.0 under the heading "Materials"

Sl. No. 2, 3, 5 & 6 mentioned below shall be complied in addition to requirement specified in Cl. 4.0 of T.S. No. MEC/TS/05/21/009, Rev.0 under the heading "Design & Construction"

Sl. No. 7 & 8 mentioned below shall be complied in addition to requirement specified in Cl. 5.0 of T.S. No. MEC/TS/05/21/009, Rev.0 under the heading "Inspection"

I. The insulating material shall be non-hygroscopic and shall be capable of sustaining high compressive stresses. The material shall have good long-term stability, excellent dielectric strength, and thermal properties without cracking, distorting, or a loss of insulating properties. The material shall be flame resistant, and also resistant to hydrocarbons, sulphides, bacteria and the climatic conditions as specified for painting requirements. The spacing ring shall be made of an age resistant material as per ASTM D709 type IV Group G.10, 11 having a minimum compressive strength of 400Mpa. Manufacturer shall submit calculations for selection of thickness of insulating rings. However, minimum thickness shall be 20mm.

II. Central insulating ring shall be accompanied with a gasket. Sealing Gasket shall be designed such that the joint assembly complies with the mechanical and electrical requirements specified in this specification. Part of Central insulating ring shall be in direct contact of forged rings providing primary insulation. The remaining part of insulating ring shall be encapsulated by seal gasket. The geometrical shape of sealing gasket shall be chosen accordingly. The gasket shall be obtained from moulds and of age resisting rubber material. Only high dielectric characteristics NBR (Nytrile butadiene rubber)/ HNBR or Viton can be used. It shall resist explosive decompression, and shall be suitable for long-term exposure to GAS at the design pressure and temperature. Properties of gasket shall be governed by ASTM D2000. Sealing gasket shall be made in one piece.

III. Sealing Systems with O-rings are not acceptable.

IV. Filling material shall be an adhesive sealant elastomer or a low viscosity, cold curing thermosetting resin. Minimum compressive strength of filling material shall be 150MPa.

V. Post Weld Heat Treatment shall not be carried out on final closure weld.

VI. Recesses and protrusions in the bore of assembly shall not be permitted. Compliance with this requirement shall not be achieved by the use of additional fillers. Central insulating ring should always be in direct contact of process fluid.

VII. Upon successful completion of hydrotest, Insulating joint shall be subjected Fatigue test in a manner described below.
Each Insulating Joint shall be subjected to a minimum of 40 pressure cycles from 10 bars to 85% of hydrostatic test pressure. After cycling, the pressure shall be raised to hydrostatic test pressure and shall be maintained for 30 minutes. No leaks or unacceptable deformation shall occur during this test. Fatigue and hydrostatic tests shall be carried out in unrestrained conditions.

VIII. The internal and external coatings shall be subjected to holiday detection test during final inspection.

SECTION II

TECHNICAL SPECIFICATION

Edition : 1

SPECIFICATION FOR INSULATING JOINTS

SPECIFICATION NO.: MEC/TS/05/21/009

(OIL & GAS SBU)
MECON LIMITED
DELHI 110 092

CONTENTS

Sl.No.	Description
1.0	SCOPE
2.0	REFERENCE DOCUMENTS
3.0	MATERIALS
4.0	DESIGN & CONSTRUCTION REQUIREMENTS
5.0	INSPECTION AND TESTS
6.0	TEST CERTIFICATES
7.0	PAINTING, MARKING AND SHIPMENT
8.0	GUARANTEE
9.0	DOCUMENTATION

AMENDMENT STATUS

Sl. No.	Clause / Paragraph / Annexure / Exhibit / Drawing Amended	Page No.	Revision	Date	By (Name)	Verified (Name)

1.0 **SCOPE**

This specification cover the basic requirements for design manufacture, testing and supply of carbon steel insulating joints to be installed in onshore pipeline systems handling hydrocarbons in liquid or gaseous phase including Liquefied Petroleum Gas (LPG).

2.0 **REFERENCE DOCUMENTS**

2.1 Reference has been made in this specification to the latest edition of, the following Codes, Standards and Specifications.

a)	ASME B 31.8	Gas Transmission & Distribution piping System
b)	ASME B 31.4	Liquid transportation systems for hydrocarbons, LPG, Anhydrous Ammonia and Alcohols
c)	ASME B 16.5	Steel Pipe Flanges & Flanged Fittings
d)	ASTM A 370	Mechanical testing of Steel Product
e)	ANSI B 16.25	Butt Welding Ends
f)	ASME Section	Boiler & pressure Vessel Code viii & ix
g)	API 1104	Standard for welding pipelines and Related facilities.
h)	SSPC-VIS-1	Steel Structures painting Council Visual Standard.
i)	MSS-SP-53	Quality standard for steel castings and forgings for valves flanges and fittings and other piping components - magnetic particle examination method.
j)	MSS-SP-75	Specification for high test wrought welding fittings.
k)	NACE RP 0286	The electrical isolation of cathodically protected pipelines.

2.2 In case of conflict between the requirements of this specification and any code, Standard and Specification referred in Clause 2.1 above. Order of precedence shall be as follows :

- Data Sheets
- This Specification
- Other Referred Codes & Standards
- Manufacturer's Standard.

3.0 **MATERIALS**

3.1 Material for the pressure containing parts of the insulating joints shall be as indicated in the data sheets. Material for pups shall be equivalent or superior to the material of connecting pipeline which is indicated in the data sheets. Other part shall be as per manufacturer's standard suitable for the service condition indicated in Insulating Joint Data Sheets and shall be subject to approval by purchaser.

All process-wetted parts, metallic & non-metallic shall be suitable for the commissioning fluids & service specified by the purchaser. Manufacturer shall confirm that all wetted parts are suitable for treated water/seawater environment, which may be used during field testing.

3.2 Insulating joints which are subject to field welding by purchaser, shall have carbon equivalent (CE) not exceeding 0.45 based on check analysis for each heat of steel calculated according to the following formula :

$$CE = C + Mn/6 + (Cr+Mo+V)/5 + (Ni + Cu)/15$$

3.3 When specified in the IJ Data Sheet, charpy V-notch test shall be conducted on each heat of base material, weld metal and heat affected zone of all pressure containing parts such as body, welding ends in accordance with the impact test provisions of ASTM A 370 at a temperature of 0° C. The charpy impact test specimens shall be taken in the direction of principal grain flow and notched perpendicular to the original surface of the plate of forging. Average impact energy value of three full sized specimens shall be 27 joules. Minimum impact energy value of any one specimen shall not be less than 80% of the average impact energy specified. No specimen shall exhibit less than 80% shear area.

When Low Temperature Carbon Steel (LCTS) materials are specified in Datasheet or offered by Manufacturer, the Charpy V-notch test requirements of applicable material standard shall be complied with.

3.4 Carbon steel used for the manufacture shall be fully killed

3.5 When specified in data sheet, hardness test shall be carried out as per ASTM A370 for each heat of steel used. The maximum hardness of base metal, weld metal and heat affected zone of all pressure parts shall be 248 HV_{10}, unless specified otherwise.

3.6 Insulation material shall be minimum 20 mm thick and shall comply section 5, NACE RP 0286.

4.0 **DESIGN & CONSTRUCTION REQUIREMENTS**

4.1 **Mechanical**

4.1.1 Insulating joints shall be of integral type fabricated by welding and with pups on either

side as shown in data sheet. A corrosion allowance as indicated in data sheet shall be considered in design. Bolted and threaded joints are not acceptable. Insulating Joints of design, not having closing welds, are not acceptable.

4.1.2 All materials used for the manufacture of the insulating joint shall be in accordance with clause 3.0 of this Specification.

4.1.3 Insulating joints shall be designed using the design principles of ASME Section-VIII Div. 1. The design shall be checked for the following two cases:

Case-I : Design Pressure (as per Data Sheet) + Axial Force (F)

The Axial force shall be calculated as under :

F = 0.1 x S x A

Where

S = SMYS of connected pipe (refer Data Sheet)
A = Metal cross-sectional area of connected pipe.

The allowable stress in this case shall be less than or equal to 0.5 x SMYS of insulating joint material.

Case-II : Hydrostatic Test Pressure

The allowable stress in this case shall be less than or equal to 95% of SMYS of insulating joint material.

All design parameters shall be as per Insulating Joint Data Sheet. Detailed calculations shall be submitted for Purchaser's approval.

4.1.4 Insulating joint design and materials shall be capable of being vacuum tested to 1 millibar.

4.1.5 The joint between pipe pup pieces and main forging shall be full penetration butt weld type. Weld design shall be such as resulting in a weld joint factor of 1.0.

4.1.6 Butt weld ends shall have ends as per ASME B16.25. However, end preparation for butt welding ends having unequal thickness with respect to connecting pipe, shall be as per ASME B31.4/ B31.8 as applicable.

4.1.7 The reinforcement of inside weld seam, in case pups fabricated from LSAW pipes, shall be removed for a distance of at least 50mm from each end.

4.1.8 Insulating joints shall allow free passage of scraper/ instrumented pigs. The internal bore shall be same as that of connecting pipe including its tolerances.

4.1.9 The insulating joint shall be formed by sandwiching and locking in positions the insulating material in a bell and spigot type of joint. The joint shall be assembled in such a way that its various components are firmly locked in position and the completed joint is capable of withstanding stresses due to designed operating conditions and field hydrostatic testing.

4.1.10 Insulating joints shall be suitable for aboveground or underground installations as indicated in the data sheets.

4.1.11 All welds shall be made by welders and welding procedures qualified in accordance with the provisions ASME section IX. The procedure qualification shall include impact test and hardness test and shall meet the requirements of clause 3.3, 3.5 of this specification.

4.1.12 Repair welding on parent metal is not allowed. Repair of welds shall be carried out only after specific approval by purchaser's representative for each repair. The repair welding shall be carried out by welders and welding procedures duly qualified as per ASME section IX and records for each repair shall be maintained. Repair welding procedure qualification shall also include impact test & hardness test when required as per Cl. No. 3.3 & 3.5 of this specification & shall meet the requirements as specified therein.

4.1.13 The Tolerance on Internal diameter at the welding end shall be as per applicable connected pipe specification as indicated in the datasheet.

4.1.14 Out of roundness measured at the root face of the welding ends shall not be more than 0.5% of the specified inside diameter.

4.2 **Electrical**

4.2.1 The average dielectric strength of the insulating joint shall be minimum 15 kilo Volts.

4.2.2 Two cleats as shown in data sheet shall be provided on the pups on either side of the insulating joint for connecting 10 mm^2 and 50 mm^2 cables for measurement/ shorting purposes. Cleats shall be attached to the insulating joint by welding.

5.0 **INSPECTION AND TESTS**

5.1 The manufacturer shall perform all inspection and tests as per the requirements of this specification and the relevant codes, prior to shipment at his works. Such inspection and tests shall be, but not limited to the following:

5.1.1 All insulating joints shall be visually inspected. The internal & external surfaces shall be free from any strikes, gauges & other detrimental & defects. The surfaces shall be thoroughly cleared & free from dirt, rust & scales.

5.1.2 Dimensional checks shall be carried out as per the purchaser approved drawings.

5.1.3 Chemical composition and mechanical properties including hardness shall be checked as per relevant material standards and this specification, for each heat of steel used.

5.1.4 Non-destructive inspection of insulating joints shall be carried out as given below:

a) 100% radiography shall be carried out on all butt & repair welds of pressure containing parts. Acceptance limits shall be as per API 1104.
Welds, which in purchaser's Representative opinion cannot be inspected by radiographic methods, shall be checked by ultrasonic or magnetic particle methods. Acceptance criteria shall be as per ASME Section VIII Appendix-12 and Appendix-6 respectively.

b) All finished weld ends shall be 100% ultrasonically tested for lamination type defects for a distance of 5Omm from the ends. Any lamination larger than 6.35 mm shall not be acceptable.

c) All forgings shall be wet magnetic particle inspected on 100% of forged surfaces. Method and acceptance shall comply MSS-SP-53.

d) All fillet weld of thickness < 6mm shall be examined 100% by magnetic particle inspection and ≥ 6mm shall be examined 100% by UT. Acceptance criteria for MPI & UT shall be as per ASME Sec.VIII Appendix-6 & Appendix-12 respectively.

5.1.5 Insulating joint shall be hydrostatically tested to a pressure as indicated in data sheet. The test duration shall be of 15 minutes.

5.1.6 After the hydrostatic test insulating joints shall be tested with air at 5 kg/cm^2 for 10 minutes. The tightness shall be checked by immersion or with a frothing agent. No leakage will be accepted.

5.1.7 **Dielectric Test**

a) Insulation resistance of each insulating joint shall be atleast 25 mega-ohms when checked with 500-1000 V DC.

b) Insulating joint before and after the hydrostatic test, shall be tested for dielectric integrity for one minute at 5000 V A.C., 50 cycles and the leakage current before and after hydrostatic test shall be equal. Testing time voltage and leakage shall be recorded and certified. No repair shall be permitted to the insulating joints failed in the above-mentioned tests.

5.2 Purchaser reserves the right to perform stage wise inspection and witness test as indicated in Para 5.1 at Manufacturer's works prior to shipment. Manufacturer shall give reasonable notice of time and shall provide without charge reasonable access and facilities required for inspection to the purchaser's Representative.

Inspection and tests performed/witnessed by the Purchaser's Representative shall in no way relieve the Manufacturer's obligation to perform the required inspection and test.

6.0 **TEST CERTIFICATES**

6.1 Manufacturer shall submit following certificates to Purchaser's Representative.

a) Test certificates relevant to the chemical analysis and mechanical properties including hardness of the materials used for construction of insulating joint as per this specification and relevant standards.
b) Test reports on non-destructive testing.
c) Test certificates for hydrostatic and air tests.
d) Test certificate for electrical test.
e) Test report on vacuum test.

7.0 **PAINTING, MARKING AND SHIPMENT.**

7.1 Insulating joint surface shall be thoroughly cleaned, freed from rust and grease and applied with sufficient coats of corrosion resistant paint. Surface preparation shall be carried out by shot blasting to SP-6 in accordance with "steel structures painting council - Visual standard SSPC-VIS-I.". External surfaces of burried insulating joints shall be painted with three coats of suitable coal tar epoxy resin with a minimum dry film thickness of 300 microns.

Manufacturer shall indicate the type of corrosion resistant paint used, in the drawings submitted for approval.

7.2 Insulating joints shall be marked with indelible paint with the following data:-

a. Manufacturer's name
b. Suitable for _____inch nominal diameter pipeline
c. End thickness in mm
d. Material
e. Design Pressure/ Hydrostatic Test Pressure
f. ANSI Class Rating
g. Tag No.
h. Year of Manufacture

7.3 Insulating joints shall be suitably protected to avoid any damage during transit. Metallic or high-impact plastic bevel protectors shall be provided to weld ends.

7.4 Only those insulating joints which have been inspected and certified by Purchaser shall be shipped.

8.0 **GUARANTEE**

8.1 The manufacturer shall guarantee that the materials used comply with the requirements of this specification.

8.2 Manufacturer shall replace or repair insulating joints found defective due to inadequate engineering or quality of material.

8.3 Manufacturer shall replace the insulating joint without delay if the defect or malfunctioning can not be eliminated.

8.4 Any defects occurring within 12 months from the date of installation or within 30 months from the date of despatch, whichever is earlier, shall be repaired making all necessary modifications and repair of defective parts free of charge to the purchaser.

9.0 **DOCUMENTATION**

9.1 All documents shall be in English Language.

9.2 At the time of bidding, Bidder shall submit the following documents:-

a) General arrangement drawing along with cross sectional view, overall dimensions and details of insulating materials recommended.
b) Reference lists of previous supplies of insulating joint of similar specification.
c) Clause wise list of deviation from this specification, if any.

9.3 Within three weeks of placement of order, the Manufacturer shall submit four copies of but not limited to the following drawings, documents and specifications for approval.

a) Fabrication drawings and relevant calculations for pressure containing parts.
b) Welding procedure and method of manufacture for all phases of manufacture.
c) Quality Control Manual & Quality Control Plan.

Once the approval has been given by purchaser any changes in design, material and method of manufacture shall be notified to the Purchaser whose approval in writing of all changes shall be obtained before the insulting joint are manufactured.

9.4 Within four weeks from the approval date Manufacturer shall submit one reproducible and six copies of the approved drawings, documents and specifications as listed in 9.3 of this specification.

9.5 Prior to shipment, the manufacturer shall submit one reproducible and six copies of the test certificates as listed in Clause 6.0 of this specification.

SECTION III

DATASHEETS OF INSULATING JOINT

DATA SHEET FOR INSULATING JOINTS

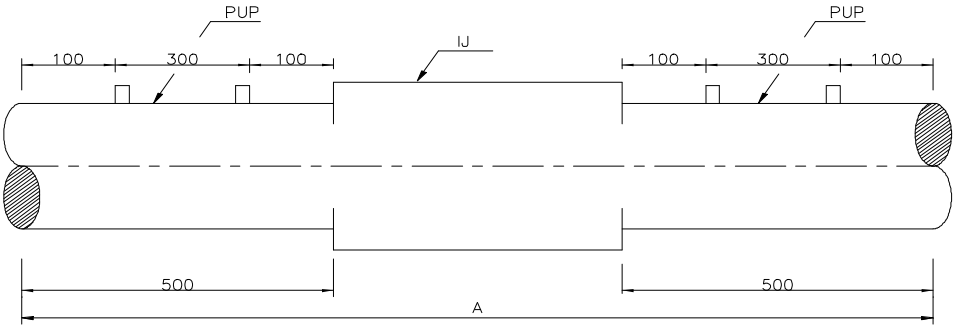

A = OVERALL LENGTH OF IJ TO BE CONFIRMED BY MANUFACTURER.

MR Item no. 1

1. INSULATING JOINTS MFR. :
2. PURCHASER'S SPECIFICATION NO. : MEC/TS/05/21/009
3. RATING : 600#
4. DESIGN PRESSURE : 92 Kg/cm2(g)
5. DESIGN TEMPERATURE : -29°C to 65°C
6. SERVICE : NATURAL GAS
7. CORROSION ALLOWANCE : 1.5 MM
8. SIZE NB MM (INCHES) : 609.6 (24")
9. END CONNECTION : BUTT-WELD AT BOTH ENDS
10. DESIGN CODE : ASME SECTION-VIII DIV-I
11. DESIGN FACTOR : 0.5
12. HYDROSTATIC TEST PRESSURE : 138 Kg/cm^2(g)
13. CHARPY TEST(BODY, WELDING ENDS) : REQUIRED AS PER TECHNICAL SPEC. & ASTM A370
14. HARDNESS TEST : REQUIRED AS PER TECHNICAL SPEC. & ASTM A370
15. MATERIALS SPECIFICATION (EQUIVALENT OR SUPERIOR)
    A) BODY : ASTM A-694, F-70
    B) PUPS : API 5L GR. X-70PSL-2, 14.27 mm THK.(MIN.)
    C) INSULATING MATERIAL : ASTM D709 G10/ G11
16. CONNECTING PIPE SPECIFICATION

SIZE, NB, MM (INCHES)	609.6 (24")
WALL THICKNESS, MM(MIN.)	14.27
GRADE	API 5L Gr. X-70

17. SPECIAL REQUIREMENTS : INSULATION JOINT SHALL BE SUITABLE FOR ABOVE GROUND INSTALLATION
18. QUANTITY : 08 NOS.
19. TAG NOS. : Shall be intimated to the successful bidder.

Note: Manufacturer shall ensure that the wall thickness (W.T.) of all parts of insulating joint shall be adequate to sustain design pressure and selected W.T. shall be suitable for welding with W.T. of connected pipeline.

REV. NO.	DATE	ZONE	DESCRIPTIONS	BY	APPRD
			REVISIONS		

SECTION OIL & GAS				CLIENT : IGGL	REFERENCES / DRG. NO.
	NAME	DATE	CHKD	DATE	MECON LIMITED
DSGN	SACHIN		HARSH	07.11.2020	PROJECT : NORTH -EAST NATURAL GAS PIPELINE GRID
DRWN					PROJECT (SECTIONS – 1, 2, 3, 5 & 9)
APPROVED		INDRANIL SEN, Sr. GM		DATA SHEET FOR INSULATING JOINTS	SCALE : / Data Sheet No.MEC/23VC/05/21/M/00/DS-009-01 / REV 0

DATA SHEET FOR INSULATING JOINTS

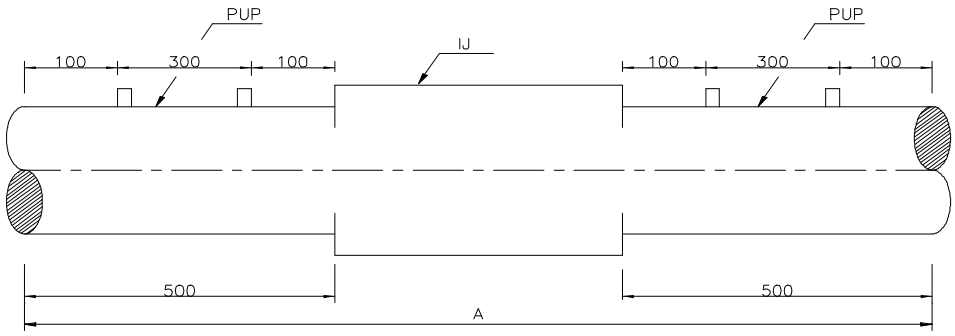

A = OVERALL LENGTH OF IJ TO BE CONFIRMED BY MANUFACTURER.

MR Item no. 2

1. INSULATING JOINTS MFR. :
2. PURCHASER'S SPECIFICATION NO. : MEC/TS/05/21/009
3. RATING : 600#
4. DESIGN PRESSURE : 92 Kg/cm2(g)
5. DESIGN TEMPERATURE : -29°C to 65°C
6. SERVICE : NATURAL GAS
7. CORROSION ALLOWANCE : 1.5 MM
8. SIZE NB MM (INCHES) : 457.2 (18")
9. END CONNECTION : BUTT-WELD AT BOTH ENDS
10. DESIGN CODE : ASME SECTION-VIII DIV-I
11. DESIGN FACTOR : 0.5
12. HYDROSTATIC TEST PRESSURE : 138 Kg/cm2(g)
13. CHARPY TEST(BODY, WELDING ENDS) : REQUIRED AS PER TECHNICAL SPEC. & ASTM A370
14. HARDNESS TEST : REQUIRED AS PER TECHNICAL SPEC. & ASTM A370
15. MATERIALS SPECIFICATION (EQUIVALENT OR SUPERIOR)
    A) BODY : ASTM A-694, F-70
    B) PUPS : API 5L GR. X-70 PSL-2, 10.31 mm THK.(MIN.)
    C) INSULATING MATERIAL : ASTM D709 G10/ G11
16. CONNECTING PIPE SPECIFICATION

SIZE, NB, MM (INCHES)	457.2 (18")
WALL THICKNESS, MM(MIN.)	10.31
GRADE	API 5L Gr. X-70

17. SPECIAL REQUIREMENTS : INSULATION JOINT SHALL BE SUITABLE FOR ABOVE GROUND INSTALLATION
18. QUANTITY : 02 NOS.
19. TAG NOS. : Shall be intimated to the successful bidder.

Note: Manufacturer shall ensure that the wall thickness (W.T.) of all parts of insulating joint shall be adequate to sustain design pressure and selected W.T. shall be suitable for welding with W.T. of connected pipeline.

REV. NO.	DATE	ZONE	DESCRIPTIONS	BY	APPRD
			REVISIONS		

SECTION OIL & GAS					CLIENT : IGGL	REFERENCES / DRG. NO.
	NAME	DATE	CHKD	DATE		MECON LIMITED
DSGN	SACHIN		HARSH	07.11.2020	PROJECT : NORTH -EAST NATURAL GAS PIPELINE GRID	
DRWN					PROJECT (SECTIONS – 1, 2, 3, 5 & 9)	
APPROVED			INDRANIL SEN, Sr. GM		DATA SHEET FOR INSULATING JOINTS	SCALE : / Data Sheet No.MEC/23VC/05/21/M/00/DS-009-02 / REV 0

DATA SHEET FOR INSULATING JOINTS

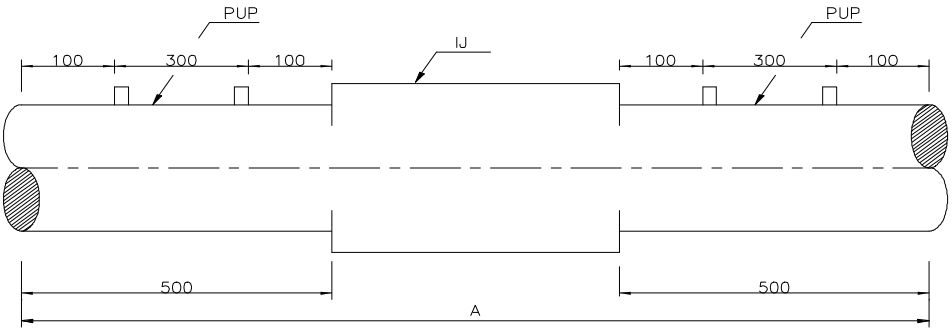

A = OVERALL LENGTH OF IJ TO BE CONFIRMED BY MANUFACTURER.

MR Item no. 3

1. INSULATING JOINTS MFR. :
2. PURCHASER'S SPECIFICATION NO. : MEC/TS/05/21/009
3. RATING : 600#
4. DESIGN PRESSURE : 92 Kg/cm2(g)
5. DESIGN TEMPERATURE : -29°C to 65°C
6. SERVICE : NATURAL GAS
7. CORROSION ALLOWANCE : 1.5 MM
8. SIZE NB MM (INCHES) : 323.9 (12")
9. END CONNECTION : BUTT-WELD AT BOTH ENDS
10. DESIGN CODE : ASME SECTION-VIII DIV-I
11. DESIGN FACTOR : 0.5
12. HYDROSTATIC TEST PRESSURE : 138 Kg/cm2(g)
13. CHARPY TEST(BODY, WELDING ENDS) : REQUIRED AS PER TECHNICAL SPEC. & ASTM A370
14. HARDNESS TEST : REQUIRED AS PER TECHNICAL SPEC. & ASTM A370
15. MATERIALS SPECIFICATION (EQUIVALENT OR SUPERIOR)
    A) BODY : ASTM A-694, F-70
    B) PUPS : API 5L Gr. X-70,PSL-2, 9.53 mm THK.(MIN.)
    C) INSULATING MATERIAL : ASTM D709 G10/ G11
16. CONNECTING PIPE SPECIFICATION

SIZE, NB, MM (INCHES)	323.9 (12")
WALL THICKNESS, MM(MIN.)	9.53
GRADE	API 5L Gr. X-70

17. SPECIAL REQUIREMENTS : INSULATION JOINT SHALL BE SUITABLE FOR ABOVE GROUND INSTALLATION
18. QUANTITY : 28 Nos. (Total)
19. TAG NOS. : Shall be intimated to the successful bidder.

Note: Manufacturer shall ensure that the wall thickness (W.T.) of all parts of insulating joint shall be adequate to sustain design pressure and selected W.T. shall be suitable for welding with W.T. of connected pipeline.

REV. NO.	DATE	ZONE	DESCRIPTIONS	BY	APPRD
			REVISIONS		

SECTION OIL & GAS				CLIENT : IGGL	REFERENCES	DRG. NO.
	NAME	DATE	CHKD	DATE		MECON LIMITED
DSGN	SACHIN		HARSH	07.11.2020	PROJECT : NORTH -EAST NATURAL GAS PIPELINE GRID	
DRWN					PROJECT (SECTIONS – 1, 2, 3, 5 & 9)	
APPROVED			INDRANIL SEN, Sr. GM		DATA SHEET FOR INSULATING JOINTS	SCALE : Data Sheet No.MEC/23VC/05/21/M/00/DS-009-03 REV 0

DATA SHEET FOR INSULATING JOINTS

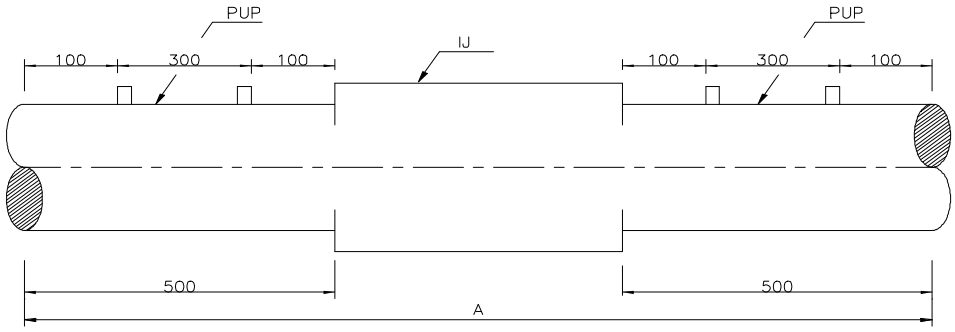

A = OVERALL LENGTH OF IJ TO BE CONFIRMED BY MANUFACTURER.

MR Item no. 4

1. INSULATING JOINTS MFR. :
2. PURCHASER'S SPECIFICATION NO. : MEC/TS/05/21/009
3. RATING : 600#
4. DESIGN PRESSURE : 92 Kg/cm2(g)
5. DESIGN TEMPERATURE : -29°C to 65°C
6. SERVICE : NATURAL GAS
7. CORROSION ALLOWANCE : 1.5 MM
8. SIZE NB MM (INCHES) : 219.1 (8")
9. END CONNECTION : BUTT-WELD AT BOTH ENDS
10. DESIGN CODE : ASME SECTION-VIII DIV-I
11. DESIGN FACTOR : 0.5
12. HYDROSTATIC TEST PRESSURE : 138 Kg/cm2(g)
13. CHARPY TEST(BODY, WELDING ENDS) : REQUIRED AS PER TECHNICAL SPEC. & ASTM A370
14. HARDNESS TEST : REQUIRED AS PER TECHNICAL SPEC. & ASTM A370
15. MATERIALS SPECIFICATION (EQUIVALENT OR SUPERIOR)
    A) BODY : ASTM A-694, F-56
    B) PUPS : API 5L X-56 PSL-2, 7.92 mm THK.(MIN.)
    C) INSULATING MATERIAL : ASTM D709 G10/ G11
16. CONNECTING PIPE SPECIFICATION

SIZE, NB, MM (INCHES)	219.1 (8")
WALL THICKNESS, MM(MIN.)	7.92
GRADE	API 5L X-56 PSL-2

17. SPECIAL REQUIREMENTS : INSULATION JOINT SHALL BE SUITABLE FOR ABOVE GROUND INSTALLATION
18. QUANTITY : 24 NOS.
19. TAG NOS. : Shall be intimated to the successful bidder.

Note: Manufacturer shall ensure that the wall thickness (W.T.) of all parts of insulating joint shall be adequate to sustain design pressure and selected W.T. shall be suitable for welding with W.T. of connected pipeline.

REV. NO.	DATE	ZONE	DESCRIPTIONS	BY	APPRD
REVISIONS					

SECTION OIL & GAS				CLIENT : IGGL	REFERENCES	DRG. NO.
	NAME	DATE	CHKD	DATE		MECON LIMITED
DSGN	SACHIN		HARSH	07.11.2020	PROJECT : NORTH -EAST NATURAL GAS PIPELINE GRID	
DRWN					PROJECT (SECTIONS – 1, 2, 3, 5 & 9)	
APPROVED			INDRANIL SEN, Sr. GM		DATA SHEET FOR INSULATING JOINTS	SCALE : Data Sheet No.MEC/23VC/05/21/M/00/DS-009-04 REV 0

DATA SHEET FOR INSULATING JOINTS

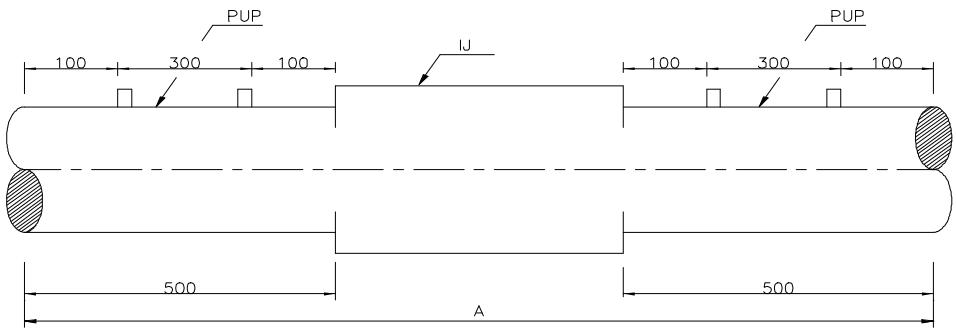

A = OVERALL LENGTH OF IJ TO BE CONFIRMED BY MANUFACTURER.

MR Item no. 5

1. INSULATING JOINTS MFR. :
2. PURCHASER'S SPECIFICATION NO. : MEC/TS/05/21/009
3. RATING : 600#
4. DESIGN PRESSURE : 92 Kg/cm2(g)
5. DESIGN TEMPERATURE : -29°C to 65°C
6. SERVICE : NATURAL GAS
7. CORROSION ALLOWANCE : 1.5 MM
8. SIZE NB MM (INCHES) : 168.3 (6")
9. END CONNECTION : BUTT-WELD AT BOTH ENDS
10. DESIGN CODE : ASME SECTION-VIII DIV-I
11. DESIGN FACTOR : 0.5
12. HYDROSTATIC TEST PRESSURE : 138 Kg/cm2(g)
13. CHARPY TEST(BODY, WELDING ENDS) : REQUIRED AS PER TECHNICAL SPEC. & ASTM A370
14. HARDNESS TEST : REQUIRED AS PER TECHNICAL SPEC. & ASTM A370
15. MATERIALS SPECIFICATION (EQUIVALENT OR SUPERIOR)
    A) BODY : ASTM A 105
    B) PUPS : ASTM A 106 Gr. B (Charpy), 11.0 mm THK.(MIN.)
    C) INSULATING MATERIAL : ASTM D709 G10/ G11
16. CONNECTING PIPE SPECIFICATION

SIZE, NB, MM (INCHES)	168.3 (6")
WALL THICKNESS, MM(MIN.)	11.0
GRADE	ASTM A 106 Gr. B (Charpy)

17. SPECIAL REQUIREMENTS : INSULATION JOINT SHALL BE SUITABLE FOR ABOVE GROUND INSTALLATION
18. QUANTITY : 05 NOS.
19. TAG NOS. : Shall be intimated to the successful bidder.

Note: Manufacturer shall ensure that the wall thickness (W.T.) of all parts of insulating joint shall be adequate to sustain design pressure and selected W.T. shall be suitable for welding with W.T. of connected pipeline.

REV. NO.	DATE	ZONE	DESCRIPTIONS	BY	APPRD
			REVISIONS		

SECTION OIL & GAS				CLIENT : IGGL	REFERENCES	DRG. NO.
	NAME	DATE	CHKD	DATE		MECON LIMITED
DSGN	SACHIN		HARSH	07.11.2020	PROJECT : NORTH -EAST NATURAL GAS PIPELINE GRID	
DRWN					PROJECT (SECTIONS – 1, 2, 3, 5 & 9)	
APPROVED			INDRANIL SEN, Sr. GM		DATA SHEET FOR INSULATING JOINTS	SCALE : Data Sheet No.MEC/23VC/05/21/M/00/DS-009-05 REV 0

DATA SHEET FOR INSULATING JOINTS

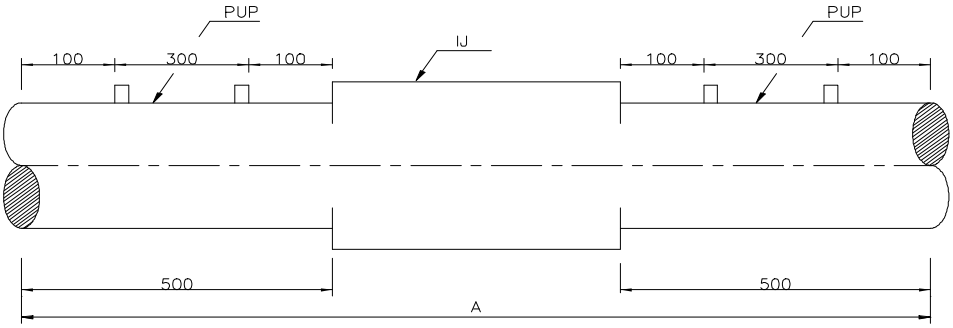

A = OVERALL LENGTH OF IJ TO BE CONFIRMED BY MANUFACTURER.

MR Item no. 6

1. INSULATING JOINTS MFR. :
2. PURCHASER'S SPECIFICATION NO. : MEC/TS/05/21/009
3. RATING : 600#
4. DESIGN PRESSURE : 92 Kg/cm2(g)
5. DESIGN TEMPERATURE : -29°C to 65°C
6. SERVICE : NATURAL GAS
7. CORROSION ALLOWANCE : 1.5 MM
8. SIZE NB MM (INCHES) : 114.3 (4")
9. END CONNECTION : BUTT-WELD AT BOTH ENDS
10. DESIGN CODE : ASME SECTION-VIII DIV-I
11. DESIGN FACTOR : 0.5
12. HYDROSTATIC TEST PRESSURE : 138 Kg/cm^2(g)
13. CHARPY TEST(BODY, WELDING ENDS) : REQUIRED AS PER TECHNICAL SPEC. & ASTM A370
14. HARDNESS TEST : REQUIRED AS PER TECHNICAL SPEC. & ASTM A370
15. MATERIALS SPECIFICATION (EQUIVALENT OR SUPERIOR)
    A) BODY : ASTM A 105
    B) PUPS : ASTM A 106 Gr. B (Charpy), 8.56 mm THK.(MIN.)
    C) INSULATING MATERIAL : ASTM D709 G10/ G11
16. CONNECTING PIPE SPECIFICATION

SIZE, NB, MM (INCHES)	114.3 (4")
WALL THICKNESS, MM(MIN.)	8.56
GRADE	ASTM A 106 Gr. B (Charpy)

17. SPECIAL REQUIREMENTS : INSULATION JOINT SHALL BE SUITABLE FOR ABOVE GROUND INSTALLATION
18. QUANTITY : 07 NOS.
19. TAG NOS. : Shall be intimated to the successful bidder.

Note: Manufacturer shall ensure that the wall thickness (W.T.) of all parts of insulating joint shall be adequate to sustain design pressure and selected W.T. shall be suitable for welding with W.T. of connected pipeline.

REV. NO.	DATE	ZONE	DESCRIPTIONS	BY	APPRD
			REVISIONS		

SECTION OIL & GAS				CLIENT : IGGL	REFERENCES	DRG. NO.
	NAME	DATE	CHKD	DATE		MECON LIMITED
DSGN	SACHIN		HARSH	07.11.2020	PROJECT : NORTH -EAST NATURAL GAS PIPELINE GRID	
DRWN					PROJECT (SECTIONS – 1, 2, 3, 5 & 9)	
APPROVED		INDRANIL SEN, Sr. GM		DATA SHEET FOR INSULATING JOINTS	SCALE : Data Sheet No.MEC/23VC/05/21/M/00/DS-009-06	REV 0

SECTION IV

QAP FOR MANUFACTURING OF INSULATING JOINTS

QUALITY ASSURANCE PLAN
FOR
INSULATING JOINTS

0	07.11.2020	ISSUED FOR IMPLEMENTATION	SACHIN	HARSH	INDRANIL SEN
Rev. No.	Date	Purpose	Prepared by	Checked by	Approved by

Format No. : 05/21/IJ/001

APPLICABLE CODES AND SPECIFICATIONS : MEC/TS/05/21/009, R-0 WITH AMENDMENTS									SCOPE OF INSPECTION			
S. NO.	STAGE	COMPONENT	CHARACTERISTICS	METHOD OF CHECK	QUANTUM OF CHECK	REFERENCE DOCUMENTS	ACCEPTANCE NORMS	RECORD	Sub Vendor	Vendor	VENDOR APPOINTED TPI	MECON / IGGL
1.	Raw Material Identification	Forged Ring, Pipe	1. Visual 2. Dimensions 3. Finish 4. Bore 5. Marking Mechanical properties (Tensile, Impact, Hardness and others) Chemical properties (CEValue) 8. Supply Condition (Heat treatment). Deoxidation practice / refining (killed / calcium treated / vacuum degassed etc.) (as per applicable spec.)	Visual Dimensions Verification of markings with TC, TC verification	100%	Material Specification	Technical Specification as per TS and Data Sheet	Mill, Manufact-urer's TC	-	W	R	R
2.	Raw Material Identification	Seal Gasket, Filling Material Insulating Ring	Electrical Resistance & Thickness	Die Electric Test	100%	Material Specification / Data Sheet	Technical Specification as per TS and Data Sheet	Inspection Report	-	W	W	R
3.	Manufacturing Welding	-	Approved WPS, PQR, WQT	Welding Parameters	100%	ASME Section-IX	ASME Section IX	WPS, PQR, WPS	-	W	R	R

APPLICABLE CODES AND SPECIFICATIONS : MEC/TS/05/21/009, R-0 WITH AMENDMENTS									SCOPE OF INSPECTION			
S. NO.	STAGE	COMPONENT	CHARACTERISTICS	METHOD OF CHECK	QUANTUM OF CHECK	REFERENCE DOCUMENTS	ACCEPTANCE NORMS	RECORD	Sub Vendor	Vendor	VENDOR APPOINTED TPI	MECON / IGGL
4.	Manufacturing Welding	-	New WPS, PQR, WQT	Welding Parameters	100%	ASME Section-IX	ASME Section IX	WPS, PQR, WPS	-	W	W	R
5.	Manufacturing Welding	Forged Ring to pipe (Butt & Fillet)	Welding	Welding Parameters	At random	Approved WPS	Approved WPS	Inspection Report	-	W	W	R
6.	Non Destructive Testing	Pipe to Ring (Other than butt welds) Forgings (surface), Finished weld ends for lamination, Fillet welds greater 7 mm and above.	Surface & Internal Imperfections	UT, MPI or other as specified	PO, Material Specification	PO, Material Specification	PO, Technical Specification	Inspection Report, Graphical record	-	W	W	R
7.	Non Destructive Testing	Pipe to Ring (Butt Welds & Repairs)	Surface & Internal Imperfections	Radiography	PO, Material Specification	API-1104 ASME SEC V	API-1104 PO, Technical Specification	Inspection Report Film	-	W	R (100% of films)	R
8.	Hydro testing Air Leak Test, Vacuum Test	Insulating Joint Assembly	Leak Check	Visual	100%	Material Specification	Technical Specification and relevant standards mentioned therein.	Inspection Report, Hydro graph	-	W	W	W
9.	Final Inspection	Pipe	Surface condition,	Visual Dimensional	100% by vendor, At	Material Specification	Technical Specification	Inspection Report	-	W	W	W

APPLICABLE CODES AND SPECIFICATIONS : MEC/TS/05/21/009, R-0 WITH AMENDMENTS									SCOPE OF INSPECTION			
S. NO.	STAGE	COMPONENT	CHARACTERISTICS	METHOD OF CHECK	QUANTUM OF CHECK	REFERENCE DOCUMENTS	ACCEPTANCE NORMS	RECORD	Sub Vendor	Vendor	VENDOR APPOINTED TPI	MECON / IGGL
			face, Outer dia., Thickness Length, End finish, Coating, Marking, Colour coding.		random by MECON / TPI		and relevant standards mentioned therein.					
10.	Final Inspection	Assembly	Insulating Resistance	Die Electric Test	All Joints	Technical Specification and relevant standards mentioned therein.	No Break down of flash over	Inspection Report	-	W	W	W
11.	Final Inspection	Assembly	Fatigue Testing	Hydro Test	All Joints	Notes to MR	No Leak	Inspection Report	-	W	W	W
12.	Final Inspection	Assembly	Holiday Detection	Holiday Tester	All Joints		No Holiday	Inspection Report	-	W	W	R/W
13.	Final Inspection	Shipping	Packaging, Transport & Handling (in Wood/Plywood boxes)	---	Each Shipment	As per Tender Doc. / Material Specification / MECON Std	As per Tender Doc. / Material Specification / MECON Std	Shipping Documents & Photographs	-	H	RW	R

NOTE: 1.**All items shall be provided with EN 10204-3.2 certificates**

LEGENDS: H – Hold (Offer for Witness & obtain clearance), W – Witness, R – Review, M – Monitor, A – Approval, I – Information, X – Submit, PO – Purchase Order, PR – Purchase Requisition, SR
– Stress Relieving, MPI – Magnetic Particle Inspection, DI-Dye Penetrant Test , UT – Ultrasonic examination, TS – Technical Specification, WPS – Welding Procedure Specification, PQR – Procedure Qualification Record, WQT – Welder Qualification Test.

All the NDT / Leak Testing / Heat Treatment / Special manufacturing procedures have to be specially approved or only previously approved procedures have to be used. In case of conflict between purchase specification, contract documents and ITP more stringent conditions shall be applicable. The document describes generally the requirements pertaining to all types of Insulating Joints. Requirements specific to the item are only applicable.

For CONTRACTOR/ SUB-CONTRACTOR

(Stamp & Signature)

Format No. : 05/21/IJ/001

SECTION IV

CHECK LIST
FOR
SUBMISSION OF TECHNICAL DOCUMENTS

CHECK LIST FOR SUBMISSION OF DOCUMENTS REQUIRED FOR BID EVALUATION (INSULATING JOINTS)
Bid Document No. 05/51/23VC/IGGL/009

A) DOCUMENTS REQUIRED FOR BIDDER ELIGIBILITY CRITERIA

Sl. No.	BEC Clause No.	Documents required along with the bid, to establish fulfilment of eligibility criteria of Bidder	Submitted (Bidder to indicate Yes/ No)	Reference in Bid Document (Bidder to indicate place in the bid, such as Page No./ Vol. No. etc.)
1	**a) TECHNICAL** 3.1.1	Factory Registration Certificate/ NSIC/ ISO certificate /any other relevant document deemed necessary by bidder showing that bidder is a manufacturer.		
2	3.1.2	Purchase Order (P.O.) / Work Order (W.O.), Inspection Release Note/ Completion Certificate of relevant previous supplies (having cross reference to P.O.) and any other relevant document deemed necessary by bidder.		

Note : **It is presumed that Inspection Certificate (I.C.) would contain the location and address of works where the fabrication & inspection have taken place. In case, it is not so, the Bidder shall establish this information through another document as deemed fit by the Bidder.**

B) OTHER ESSENTIAL DOCUMENTS REQUIRED

Sl. No.	Tender Clause	Documents Required	Submitted (Bidder to indicate Yes/ No)	Reference in Bid Document (Bidder to indicate place in the bid, such as Page No./ Vol. No. etc.)
1	**a) TECHNICAL** Technical Specification, Data Sheets	All Technical Specifications & Data Sheets contained in the bid document, duly filled-up, signed and stamped by Bidder.		
2		Unpriced SOR (as quoted for items) duly signed and stamped by Bidder.		
3		"No Deviation Confirmation" certificate duly signed and stamped by Bidder.		
5	---	Fabrication, test & Delivery schedule		
6	---	G.A. Drawings of Quoted Insulating Joints.		
7	QAP	Accepted QAP or Vendor's own QAP covering the Inspection & Testing requirement specified in Tender		
8	---	Other technical details & product catalogues.		
9	----	List of spares and accessories for two years of normal operation for for insulating joints		

(Bidder's Signature and Seal)