INDRADHANUSH GAS GRID LIMITED
(Joint Venture of IOCL, ONGC, GAIL, OIL and NRL)
GUWAHATI, ASSAM

BID DOCUMENT

FOR

HDD & ASSOCIATED WORKS FOR FIVE RIVERS UNDER NORTH EAST GAS GRID PIPELINE PROJECT OF M/S IGGL
OPEN DOMESTIC COMPETITIVE BIDDING

Tender no.: 05/51/23VC/IGGL/001-i-3

VOLUME – II OF II

Visit: www.tenderwizard.com/MECON
(**Tenderwizard helpdesk:** 011-49424365)

PREPARED AND ISSUED BY

MECON LIMITED
(A Govt. of India Undertaking)
Delhi, India

CONTENTS

LIST OF SPECIFICATION / STANDARDS

VOLUME-II OF II

I. TECHNICAL SPECIFICATION FOR MECHANICAL WORKS

1.	Specification for Mainline Construction (Onshore)	MEC/S/05/21/01
2.	Specification for Welding of Onshore Gas Pipelines + Welding Specification Chart	MEC/S/05/21/02
3.	Specification for Hydrostatic Testing of Onshore Pipeline	MEC/S/05/21/03
4.	Specification for Repair of Pipeline Corrosion Coating	MEC/S/05/21/08
5.	Technical Specification for Pre-Commissioning and Commissioning	MEC/05/28/M/000/1093
6.	Specification for Health, Safety and Environment Management (HSE)	MEC/S/05/21/65
7.	Specification for Quality Assurance System Requirements	MEC/S/05/62/66
8.	Specification for Documentation for Pipeline Construction	MEC/S/05/21/69
9.	Specification for Caliper Pigging	MEC/S/05/62/70
10.	Specification for Field Joint Coatings of Pipeline for HDD Crossing	MEC/S/05/21/074
11.	Specification for Pipeline Crossings Using HDD Method	MEC/S/05/21/75

II. TECHNICAL SPECIFICATION FOR TELECOM WORKS

1.	Specification of Optical Fibre Cable & HDPE Duct Laying & Associated Work	MEC/S/05/E5/T/001
2.	Specification/ Procedure for Optical Fibre Cable Testing	MEC/S/05/E5/T/002
3.	Technical Specification for Permanently Lubricated Telecom HDPE Duct and Accessories	MEC/TS/05/E5/T/037 Rev.1
4.	Technical Specification for Optical Fibre	MEC/TS/05/E5/T/096 Rev. 4

	Cable &Associated Items	

III. TECHNICAL SPECIFICATION FOR TEMPORARY CATHODIC PROTECTION WORKS

1.	Temporary Cathodic Protection System	MEC/TS/05/E9/016A Rev.2

IV. SURVEY REPORTS

A	**GEO-TECHNICAL INVESTIGATION REPORT**	
1.	Tangani River	
2.	Mora Dhansiri River	
3.	Bargang River	
4.	Burai River	
5.	Jia Dikrong River	

V. LIST OF DRAWINGS

A	**ALIGNMENT SHEETS**	
1.	Tangani River	
2.	Mora Dhansiri River	
3.	Bargang River	
4.	Burai River	
5.	Jia Dikrong River	

B	**CROSSING DRAWINGS**	
1.	Tangani River	
2.	Mora Dhansiri River	
3.	Bargang River	
4.	Burai River	
5.	Jia Dikrong River	

C	MECHANICAL STANDARD DRAWINGS	
1.	Min. elastic bend radius for Pipe	MEC/TYP/05/21/01A/009
2.	Pipeline Symbols	MEC/TYP/05/21/01A/011
3.	Topographical Symbols	MEC/TYP/05/21/01A/012
4.	Location of Specimen for Weld Procedure Qualification for Pipe Diameter ≥ 12¾”	MEC/TYP/05/21/02/002
5.	ISO Tensile Test Specimen	MEC/TYP/05/21/02/003
6.	Hardness Testing of Weld Joints Schematic	MEC/TYP/05/21/02/004
7.	Charpy V-Notch Test Specimen	MEC/TYP/05/21/02/005
8.	Calibration Piece for Ultrasonic Equipment	MEC/TYP/05/21/02/006
9.	Required IQI Sensitivity Source Side Penetrameter	MEC/TYP/05/21/02/007
10.	Butt Weld Details	MEC/TYP/05/21/06/034

D	TELECOMMUNICATION DRAWINGS	
1.	Standard Sketch OFC Joining/Blowing Pit	MEC/TS/05/E5/T/009
2.	Optical Fiber Cable Joint Marker	MEC/05/E5/T/010
E	TEMPORARY CATHODIC PROTECTION DRAWINGS	
1	Pre packed Zinc Anode	MEC/SD/05/E9/E/CP/1601, Rev.1
2	Pre packed Mg Anode	MEC/SD/05/E9/E/CP/1602, Rev.1
3	Details of Test Station for TCP	MEC/SD/05/E9/E/CP/1604, Rev.1
4	Test Station Connection Schemes	MEC/SD/05/E9/E/CP/1605, Rev.1
5	Galvanic Anode Installation	MEC/SD/05/E9/E/CP/1606, Rev.1

I. TECHNICAL SPECIFICATION FOR MECHANICAL WORKS

Rev. : 0
Edition : 1

SPECIFICATION
FOR
MAINLINE CONSTRUCTION (ONSHORE)

SPECIFICATION NO.: MEC/S/05/21/01

(OIL & GAS SBU)
MECON LIMITED
DELHI 110 092

CONTENTS

SL.NO.	DESCRIPTION
1.0	SCOPE
2.0	REFERENCE CODES, STANDARDS AND SPECIFICATIONS
3.0	REQUIREMENTS OF R.O.U. AND ACCESS THERETO
4.0	RIGHT-OF-WAY
5.0	HANDLING, HAULING, STRINGING AND STORING OF MATERIALS
6.0	TRENCHING
7.0	BENDING
8.0	LINING UP
9.0	LAYING OF PIPE
10.0	BACK-FILLING
11.0	TIEING-IN
12.0	SPECIAL INSTALLATIONS ON THE PIPELINE
13.0	WORKING SPREAD LIMITATIONS
14.0	CLEAN-UP AND RESTORATION OF RIGHT-OF-WAY
15.0	MAINTENANCE DURING DEFECTS LIABILITY PERIOD

1.0 SCOPE

1.1 This specification covers the minimum requirements for the various activities to be carried out by CONTRACTOR for or about the construction of cross-country pipelines.

1.2 The various activities covered in this specification include the following works of pipeline construction :

- Clearing, grubbing and grading of Right-of-way
- Construction of all temporary facilities required in connection with the WORKS
- Staking of the pipeline route
- Handling, hauling, stringing and storing of all materials
- Trenching
- Field-bending of line pipe
- Lining-up
- Pipeline laying
- Backfilling
- Tieing-in
- Installation of auxiliary facilities and appurtenances forming a part of pipeline installation
- Clean-up and restoration of Right-of-way;
- Maintenance during defects liability period.

1.3 This specification shall be read in conjunction with the conditions of all specifications and documents included in the CONTRACT between COMPANY and CONTRACTOR.

1.4 CONTRACTOR shall, with due care and vigilance, execute the work in compliance with all laws, by-laws, ordinances, regulations etc. and provide all services and labour, inclusive of supervision thereof, all materials, excluding the materials indicated as "COMPANY Supplied materials" in the CONTRACT, equipment, appliances or other things of whatsoever nature required in or about the execution of the work, whether of a temporary or permanent nature.

1.5 CONTRACTOR shall take full responsibility for the stability and safety of all operations and methods involved in the WORK.

1.6 CONTRACTOR shall be deened to have inspected and examined the work area(s) and its surroundings and to have satisfied himself so far as practicable as to the form and nature thereof, including sub-surface conditions, hydrological and climatic conditions, the extent and nature of the WORK and materials necessary for the completion of the WORK, and the means of access to the work area(s).

1.7 CONTRACTOR shall be deemed to have obtained all necessary information subject as above mentioned as to risks, contingencies and all other circumstances, which may influence the WORK.

1.8 CONTRACTOR shall, in connection with the WORK, provide and maintain at his own costs, all lights, guards, fencing, watching etc., when and where necessary or required by COMPANY or by any duly constituted authority and/ or by the authorities having jurisdiction thereof for the protection of the WORK and properties or for the safety and the convenience of public and/ or others.

2.0 REFERENCE CODES, STANDARDS AND SPECIFICATIONS

2.1 Reference has been made in this specification to the latest edition of the following codes, standards and specifications :

a) ANSI B 31.8 - Gas Transmission and Distribution Piping Systems

b) ANSI B 31.4 - Liquid Petroleum Transportation Piping Systems

c) API 1104 - Standard for Welding Pipelines and Related Facilities

d) API 1105 - Bulletin on Construction Practices for Oil and Products Pipelines

e) Part 1992 Title 49 - Transportation of Natural and Other Gas by Pipeline (US Department of Transportation - Pipeline Safety Standards)

f) Part 195 - Transportation of Liquids by Pipeline (US Department of Transportation - Pipeline Safety Standards).

In case of differences between the requirements of this specification and that of the above referred codes, standards and specifications, the requirements of this specification shall govern.

2.2 For the purpose of this specification the following definitions shall hold:

- the words "Shall" and "Must" are mandatory.

- the works "Should, "May" and "Will" are non-mandatory, advisory or recommended.

3.0 REQUIREMENTS OF R.O.U. AND ACCESS THERETO

CONTRACTOR shall, before starting any clearing operations, familiarise himself with all the requirements of the Authorities having jurisdiction over the Right of Way for work along the pipeline route or in connection with the use of other lands or roads for construction purpose.

CONTRACTOR shall notify COMPANY well in advance during work progress, the method of construction for crossing road, pipeline, cable, railway, river and other existing obstacles.

CONTRACTOR shall not commence work on such crossings before having obtained approval from the authorities and land owners concerned to the satisfaction of COMPANY. The crossings shall be installed to meet at all times the requirements and conditions of the permit issued by the authorities concerned. In the absence of any specific requirements by authorities, CONTRACTOR shall comply with COMPANY'S instructions.

The right of ingress and egress to the ROW shall be limited to points where such ROW intersects public roads, Arrangements for other access required by the CONTRACTOR shall be made by him at his own cost and responsibility, and for such access, the conditions of this specifications shall also apply.

Where the ROW comes within 30 metres of an existing line or facility, CONTRACTOR shall propose and provide methods to safe-guard the existing line or facility (e.g. a demarcation fence). No work is allowed in such area without COMPANY's prior approval.

3.1 Safety measures during construction of pipelines inside the area influenced by high voltage lines

3.1.1 General

Pipelines which are constructed inside the area of high voltage lines may be electrically influenced by the high voltage lines. The voltage caused by the influence may at times be high enough to pose danger to personnel working on the pipeline. It is imperative therefore, that the instructions given below should be strictly observed.

3.1.1.1 It is a necessity that all personnel working on the pipeline which is being laid in the area influenced by the high voltage systems, be given clear instructions on measures to be taken.

3.1.1.2 Vehicles and equipment must be earth-connected. This may be effected by attaching an uninsulated cable or chain (which touches the ground) of adequate length to the underside of the vehicle.

3.1.1.3 If its not impossible for plant and/ or materials to come within 50m of the centre of the high voltage systems, special measures must be taken to prevent any approach beyond that distance, unless article 3.1.2 is complied with.

3.1.1.4 DURING THUNDERSTORMS OR WHEN DISCHARGES ARE OBSERVED ON INSULATORS ALL PERSONNEL MUST LEAVE THE AREA OF THE HIGH VOLTAGE LINE AND PIPELINE.

3.1.1.5 To prevent electrical voltage in a non-buried section of the pipeline from rising to dangerous levels, the length of the pipeline section which has been welded together before burial must not exceed the length at which the max. admissible voltage may be induced. This length may be calculated using an approved calculation method.

3.1.1.6 Before a pipeline section is lowered into the trench the structure's earth electrodes indicated in the drawings or determined with calculation method must have been installed and connected both to the pipeline section already buried and to the section which is about to be buried. The electrical connections which serve the purpose of preventing dangerous voltages must have a min. area of $35mm^{2.}$

Said connections must not be interrupted until after the permanent safety earth connections have been installed and connected to the entire uninterrupted pipeline.

3.1.1.7 The welded connection between the pipeline section and the section already buried must be installed at a distance of at least 50m from the nearest point of a pylon base.

3.1.1.8 Personnel doing work inside the area of influence of the high voltage system must wear electrically insulating foot-wear (e.g. rubber kneeboots) and wear insulating rubber or plastic gloves.

3.1.2 **Additional measures for work at less than 50m from the centre of the high voltage system.**

If work is done at less than 50m from the centre of the high voltage system, the regulations below must be complied with in addition to the rules specified in clause 3.1.1.

3.1.2.1 The work must not be started until agreement has been reached with the authorities which controls the high voltage system, about the implementation of the safety measures specified in this section.

3.1.2.2 Measures must be taken to prevent excavating and hoisting equipments from approaching high voltage lines to within any of the following distances.

This distance depends on the voltage carried. For individual connections the distance must be :

0	-	50 KV	3m
40	-	200 KV	5m
200	-	380 KV	8m

The measures taken may be as follows :

1. Special selection of equipment, or limiting or blocking certain directions of movement, or limiting the operational area, thereby making it impossible for any work to tbe done at a distance from the high voltage line of less than the accepted minimum.

2. In case the measures recommended in 1. above are not feasible, installation of clearly visible markers of sufficient height or laying out a "no passage beyond this point" line of drums painted bright red and white must prevent any work being done inside the danger area. Further, an inspector must be prevent all the time.

3.1.2.3 In the event that a vehicle, crane etc. should accidently come into contact with a live cable of a high voltage system or flash-over of electrical charge occurs, the driver must not leave his vehicle because this will pose a serious threat to his life.

The vehicle or crane must break the contact WITHOUT ANY HELP FROM OUTSIDE.

The driver must not leave his vehicle unitl be has managed to leave "the dangerous area, or alternatively, when the Electricity Authorities have given notice that the cable(s) have been put out of circuit. In case a serious fire starts in the vehicle, he is permitted to jump from the vehicle, clearing it as far as possible, while the jump should possible be to a dry spot.

4.0 RIGHT-OF-WAY

The CONTRACTOR is required to perform his construction activities within the width of Right-of-way set aside for construction of pipeline, unless he has made other arrangements with the land owner and/ or tenant for using extra land. Variation in this width caused by local conditions or installation of associated pipeline facilities or existing pipelines will be identified in the field or instructed to the CONTRACTOR by COMPANY.

The ROW boundary lines shall be staked by the CONTRACTOR, so as to prepare the strip for laying the pipeline. CONTRACTOR shall also establish all required lines and grades necessary to complete the work and shall be responsible for the accuracy of such lines and grades.

4.1 Staking

Prior to cleaning operations CONTRACTOR shall :

1) Install Bench Marks, Intersection Points and other required survey movements.

2) Stake markers in the centreline of the pipeline at distance of maximum 100 metres for straight line sections and maximum 10 metres for horizontal bends. Wherever ROW centreline has been staked on ground, CONTRACTOR shall exercise care in accurately staking the pipeline centreline, in consultation with COMPANY.

3) Stake two ROW markers at least at every 100 metres.

4) Set out a reference line with respect in pipeline centreline at a convenient location. Markers on reference line shall be at a distance of maximum 100m for straight line sections and maximum 10m for horizontal bends.

5) Install distance markers locating and indicating special points, such as but not limited to :

- Contract limits, obstacle crossings, change of wall thickness, including corresponding chainage, etc.

ROW markers shall be staked out at the boundary limits of Right-of-way wherever possible. ROW markers shall be painted red with numbers painted in white. Number shall be identical to centreline marker number with letters A (left side) and B (right side) added, (looking, in flow direction). Reference markers shall also carry the same information as its corresponding centreline markers.

Markers shall be of suitable material so as to serve their purpose and shall be coloured distinctly for easy identification. CONTRACTOR shall be responsible for the maintenance and replacement of the reference line markers until the permanent pipeline markers are placed and the as-built drawings are submitted and approved.

Any deviation from the approved alignment shall be executed by CONTRACTOR after seeking COMPANY approval in writing prior to clearing operations.

4.2 Monuments

All shrines, monument, border stones, stone walls and the like shall be protected and shall be subjected to no harm during construction. Any violation of the above by the CONTRACTOR shall be brought to the notice of the COMPANY and other concerned authorities. Restoration of the above shall wholly be the responsibility of the CONTRACTOR.

4.3 Fencing

Prior to clearing or grading of the Right-of-way or stringing of pipe, CONTRACTOR shall open fences on or crossing the construction Right-of-way and install temporary gate of sound construction made of similar materials and suitable quality to serve purpose of original fence. Adjacent post shall be adequately braced to prevent slackening of the remainder of the fence. Before such fences are cut and opened, CONTRACTOR shall

notify the land owner or tenant, and where practicable, the opening of the fences shall be in accordance with the wishes of said owner and tenant. In all cases where CONTRACTOR removes fences to obtain work route, CONTRACTOR shall provide and install temporary fencing, and on completion of construction shall restore such fencing to its original condition.

CONTRACTOR shall install temporary fencing on either side of ROW where in COMPANY's opinion, it is considered essential to ensure safety and non-interference, especially in areas like grasing lands, villages etc.

Fencing shall be removable type wherever necessary, to permit crossing of traffic. The type of fencing must be suitable for the situation in accordance with user. The pole distance shall not be greater than 6m. The minimum height of the fencing shall be 1.2m above grade. Fencing can consist of one or more rows of smooth wire and/ or of barbed wire.

Fencing shall be continuously maintained and the thorough-ways inspected to be shut during the execution of the work.

4.4 **Row Clearing and Grading**

4.4.1 All stumps shall be grubbed for a continuous strip, with a width equal to trench top width plus two metres on either side centred on the pipeline centreline. Further, all stumps will be grubbed from areas of the construction Right-of-way, where Right-of-way grading will be required. Outside of these areas to be graded and the mentioned trench strip, at the option of CONTRACTOR, the stumps may either be grubbed or cut off to ground level. Any stump cut off must be left in a condition suitable for rubber-tyred pipeline equipment traffic.

4.4.2 All grubbed stumps, timber, bush undergrowth and root cut or removed from the Right-of-way shall be disposed of in a manner and method satisfactory to COMPANY, land-owner and/ or tenant, and Government Authorities having jurisdication and as soon as practical after the initial removal. In no case, it shall be left to interfere with the grading and laying operations. Whenever stumps are grubbed and a hole is left in the ground, CONTRACTOR shall back-fill the hole and compact it to prevent water from gathering in it and creating a big hole.

4.4.3 CONTRACTOR shall grade the pipeline Right-of-way as required for proper installation of the pipeline, for providing access to the pipeline during construction, and for ensuring that the pipeline is constructed in accordance with the good engineering and construction practices.

4.4.4 CONTRACTOR shall grade sharp points or low points, without prejudice to section 6.0 of this specification, to allow the pipe to be bent and laid within the limits set forth in these specifications and drawings as regards the minimum elastic curvature permitted, and shall drill, blast or excavate any rock or other material which cannot be graded off with ordinary grading equipment in order to make an adequate working space along the pipeline.

4.4.5 No temporary or permanent deposit of any kind of material resulting from clearing and grading shall be permitted in the approach to roads, railways, streams, ditches, drainage ditches and any other position which may hinder the passage and/or the natural water drainage.

4.4.6 The Right-of-Way clearing and grading operations shall in no case involve embankment structures of any type and class without prior approval of the authorities having jurisdiction over the same.

4.4.7 In the case of natural or artificial deposits of loose soil, sand, heaps of earth, or other fill materials, these shall be removed till stable natural ground level is reached so as to ensure the construction of the pipeline ditch is in stable ground.

4.4.8 In the case of Right-of-Way clearing and grading on hillside or in steep slope areas, proper barriers or other structures shall be provided to prevent the removed materials from rolling downhill. The Right-of-Way crossfall shall not exceed 10%.

4.4.9 Wherever the pipeline Right-of-Way runs across plantations, alongside farmyards, built up areas, groups of trees, horticultural spreads, gardens, grass-fields, ditches, roads, paths, railways or any other area with restrictions of some kind, CONTRACTOR shall grade only the minimum area required for digging and constructing the pipeline. In the said places, CONTRACTOR shall carry out the works in such a way that damage done from the pipeline construction is kept to a minimum.

4.5 **Provision of Detours**

CONTRACTOR shall do all necessary grading and bridging at road, water and other crossings and at other locations where needed, to permit the passage of its men and equipment. It is understood that the CONTRACTOR has recognised such restricctive features of the Right-of-Way and shall provide the necessary detoors and execute the works without any extra cost to COMPANY. Public travel shall not be inconvenienced nor shall be wholly obstructed at any point.

CONTRACTOR at his own cost shall furnish and maintain watchman detours, lanterns, traffic lights, barricades, signs, wherever necessary to fully protect the public.

CONTRACTOR shall be responsible for moving its equipment and men across or around watercourses. This may require the construction of temporary bridges or culverts. Temporary bridging or access to fording required for Right-of-Way crossing water courses shall be constructed. CONTRACTOR shall ensure that such temporary works shall not interfere with normal water flow, avoid overflows, keep the existing morphology unchanged and shall not unduly damage the banks or water courses. No public ditches or drains shall be filled or bridged for passage of equipment until CONTRACTOR has secured written approval of the Authorities having jurisdiction over the same. CONTRACTOR shall furnish COMPANY a copy of such approval.

4.6 **Steep and Rocky Terrain**

Grading operations could normally be carried out along the Right-of-way with mechanical excavators or manually. In certain areas, grading may have to be resorted to exclusively by blasting.

In rough or steep terrain, CONTRACTOR may have to grade access roads and temporary bypass roads for its own use. Where such access roads do not fall on the Right-of-Way, CONTRACTOR shall obtain necessary written permission from land owners and tenants and be responsible for all damages caused by the construction and use of such roads, and at no extra cost to COMPANY, Wherever rocky terrain is encountered, grading shall be carried out in all types of solid rocks which cannot be removed until loosened by blasting, drilling, wedging or by other recognised means of quarrying solid rocks.

Where use of explosives is required in connection with Right-of-Way grading and trenching, CONTRACTOR shall comply fully with requirements of the use of explosives as provided under clause 6.3 of this Specification.

4.7 **Off Right-of-Way Damages**

CONTRACTOR shall confine all its operations within limits of the Right-of-Way. Any damage to property outside ROW shall be restored or settled to the CONTRACTOR's account.

CONTRACTOR shall promptly settle all off Right-of-Way damage claims. Should CONTRACTOR fail to do so, COMPANY shall give written notice to CONTRACTOR that if CONTRACTOR does not settle such claims within seven days after such notice, COMPANY shall have the authority to settle claims from the account of the CONTRACTOR.

5.0 HANDLING, HAULING, STRINGING AND STORING OF MATERIALS.

5.1 **General**

The CONTRACTOR shall exercise utmost care in handling in pipe and other materials. CONTRACTOR shall be fully responsible for all materials and their identification until such time that the pipes and other materials are installed in permanent installation. CONTRACTOR shall be fully responsible for materials, however, method of storage shall be approved by COMPANY.

CONTRACTOR shall reimburse the COMPANY for the cost of replacement of all COMPANY supplied materials damaged during the period in which such materials are in the custody of the CONTRACTOR. It shall be CONTRACTOR's responsibility to unpack any packing for the materials supplied by COMPANY.

5.1.2 **"Taking Over" of Line Pipe**

The following stipulations shall apply in case CONTRACT provides for supply of line pipe, bare and/or corrosion coated, by COMPANY.

CONTRACTOR shall receive and 'take over' against requisition, line pipe from the COMPANY's designated place(s) of delivery as defined in the CONTRACT. CONTRACTOR shall perform visual inspection of the bare pipes and coating of the corrosion coated pipes, as the case may be, in the presence of COMPANY and all damages shall be recorded. In the case of corrosion coated pipes CONTRACTOR at his option may carry out holiday detection at a prescribed set voltage and record such holidays, in the presence of COMPANY, at the time of 'taking over'. However, if CONTRACTOR proposes to perform only visual inspection of coating, then repair of all holidays found at the time of laying the pipeline shall be carried out by the CONTRACTOR at no extra cost to COMPANY. The CONTRACTOR shall be entitled to extra compensation for repair and rectification of defects recorded at the time of taking over as per the rate set forth in the "CONTRACT". Repair of all damages after taking over the delivery of the materials shall be to the CONTRACTOR'S cost. In case of delay in handing over of COMPANY supplied material, CONTRACTOR shall be fully responsible for stopping and rearranging means of transportation at no extra cost to the COMPANY.

5.2 **Handling and Hauling of Line Pipe**

5.2.1 **Bare Pipe**

CONTRACTOR shall unload, load, stockpile and transport the bare pipes using suitable means and in a manner to avoid denting, flattening, or other damage to pipes. Pipe shall not be allowed to drop or strike objects which will damage the pipe but shall be lifted or lowered from one level to another by suitable equipment. Lifting hooks when used, shall be equipped with a plate curved to fit the curvature of the pipe. In loading pipe on trucks each length shall be lowered to position without dropping and each succeeding length shall rest on special supports on the truck and shall be separated from the adjacent pipes. After loading, suitable chains and padding shall be used to tie the load securely to each bolster. Pipes, when stock piled, shall be placed on suitable skids to keep them clear of the ground and flood water. The CONTRACTOR shall provide all necessary timber or other materials required for the stock-piling. While stacking, the number of allowable layers of bare pipes shall be calculated as per API RP5L1 and shall be agreed with COMPANY. The stacks must be properly secured against sliding and shall consist of pipes of the same diameter and wall thickness. Adjacent stacks of pipes having different dimensional characteristics shall be clearly separated.

Pipes which are damaged at the time of delivery or "taking-over" (when line pipe is supplied by COMPANY), particularly those which are dented, buckled, or otherwise permanently deformed, must be stacked separately and may be transported to the sites only when these defects have been repaired or eliminated.

5.2.2 **Corrosion Coated Pipes**

The CONTRACTOR shall load, unload, transport and stockpile the coated pipes using approved suitable means and in a manner to avoid damage to the pipe and coating. CONTRACTOR shall submit to the COMPANY, a complete procedure indicating the manner and arrangement used for handling and stacking of coated pipes for COMPANY approval prior to commencement of handling operations.

Use of vaccum lifting equipments are preferred. Hooks may also be used for handling the pipes provided they have sufficient width and depth to fit the inside of the pipe and covered with soft material like rubber, teflon or equivalent, so as not to cause damages to bevel or pipe ends. During hoisting, cables/wire ropes shall have sufficient inclination compared to pipe axis so that they do not come into contact with external coating.

Coated pipes may be handled by means of slings and belts of proper width (minimum 60mm) made of non-metallic/non - abrasive materials. In this case, pipes to be stacked shall be separated row by row to avoid damage by rubbing the coated surface in the process of taking off the slings. Use of round sectional slings are prohibited.

During handling, suitable handling equipment with proper length of booms shall be used. Fork lifts may be used provided that the arms of the fork lift are covered by suitable pads preferably rubber. Before lifting operations it is essential to ensure that the pipe surface is free from foreign material with sharp edges. Belts/slings when used shall be cleaned to remove hard materials such as stone, gravel etc. Coated pipes shall not be bumped against any other pipe or any other objects. Rolling, skiding or dragging shall be strictly forbidden.

Coated pipes at all times shall be stacked completely clear from the ground so that the bottom row of pipes remain free from any surface water. The pipes shall stacked at a slope so that driving rain does not collect inside the pipe.

The coated pipes at all times shall be stacked by placing them on ridges of sand free from stones and covered with a plastic film or on wooden supports provided with suitable cover. This cover can, for example, consist of dry, germ free straw with a plastic film, otherwise foam rubber may be used. The supports shall be spaced in such a manner so as to avoid permanent bending of the pipes, particularly in case of small diameter pipes with low wall thickness. The pipes shall be stacked so that the uncoated bevelled ends are in line at one end thus making differences in length clearly noticeable.

Stacks shall consist of limited number of layers so that the pressure exercised by the pipe's own weight does not cause damages to the coating. Each pipe section shall be separated by means of spacers suitably spaced for this purpose. Stacks shall be suitably secured against falling down and shall consist of pipe sections having the same diameter and wall thickness. The weld bead of pipes shall be positioned in such a manner so as not to touch the adjacent pipes.

Coated Pipes stacked in open storage yards/dump yards shall be suitably covered on top to decrease direct exposure to sunlight.

The ends of the pipes during handling and stacking shall always be protected with bevel protecters.

The lorries/rail wagons shall be equipped with adequate pipe supports having as many round hollow beds as the number of pipes to be placed on the bottom of the lorry bed. Supports shall be provided for at least 10% of the pipe length. These supports shall be lined with a rubber protection and shall be spaced in a manner as to support equal load from the pipes. The rubber protection shall be free from all nails and staples where pipes are in contact. The second layer and all subsequent layers shall be separated from other layers with adequate number of separating layers of protective material such as straw in plastic covers or otherwise to avoid direct touch between the coated pipes.

All stachions of lorries/rail wagons used for transportation shall be covered by non-abrasive material like rubber belts or equivalent. Care shall be exerclsed to properly cover the top of the stanchions and convex portions such as reinforcement of the truck/rail wagon only, rivets etc. to prevent damage to the coated surface.

5.3 **Stringing of Pipe**

Pipes shall be unloaded from the stringing trucks and lowered to the ground by means of by means of boom tractor or swinging crane or other suitable equipment using lifting devices as mentioned earlier. Dragging or sliding of pipe shall not be permitted. Special precaution shall be taken during stringing of corrosion corrosion coated pipe as per the special requirements of previous para. Stringing of pipe shall only be carried out in daylight and after clearing and grading operations have been completed. Pipes shall not be strung along the ROW in rocky areas where blasting may be required, until all blasting is completed and the area cleared of all debris.

The stringing of the pipe on the ROW shall be done in such a manner so as to cause the least interference with the normal use of the land crossed and to avoid damage to and interference with the pipes. The sequence of pipes must be interrupted at suitable intervals, spaced to coincide with passages, roads, railwys, water crossings as well as at other places if requested by landowner / tenants to permit use of land.

In case line pipe supply is by different manufacturers s, CONTRACTOR shall string all line pipes of one manufacturer before commencing the stringing of line pipes of another manufacturer.

When parallel pipelines are being constructed, bumping against and contact with the strung sections of pipe shall be avoided, whether the stringing of the pipes for the individual lines is carried separately or simultaneously.

The pipe lengths shall be properly spaced in order to make easier the handling during the welding phase.

It shall be the responsibility of the CONTRACTOR to see that pipe is strung as per the approved drawings for the proper placement of pipe by size, thickness, grade and other specifications. Any additional handling of pipes due to failure to comply with the requirements shall be at the CONTRACTOR's expense.

5.4 Repair of Damaged pipes

After the pipes have been strung along the ROW, they shall be inspected by the CONTRACTOR and by the COMPANY. All defective pipe ends shall have to be repaired as per the directions of the COMPANY or as per the requirements of this specification.

5.5 **Materials other than linepipe**

CONTRACTOR shall receive and take over against requisition all COMPANY supplied materials from COMPANY's designated place(s) of delivery as defined in the CONTRACT. CONTRACTOR shall perform visual inspection and defects, if any noted, shall be recorded separately. The CONTRACTOR shall be entitled to extra compensation for repair and rectification of such defects at the rates set forth in the "CONTRACT".

The CONTRACTOR shall perform the necessary loading, unloading, hauling from points designated by the COMPANY and storing, if necessary, of all materials. The CONTRACTOR shall exercise care in handling, storing and distribution of materials in order to avoid damage and deterioration of these materials and prevent their theft or loss.

Materials excluding line pipe shall be stored in sheltered storages. Such materials shall not be strung on the Right-of-Way but shall be transported in covered conveyances for use only at the time of installation.

CONTRACTOR shall ensure that all valves and whenever applicable, other materials are fitted with suitable end covers of the type approved by COMPANY. Materials with worked surfaces such as flanges, pipe fittings, etc. must be stacked and handled so as to avoid contact with the ground or with substances that could damage them.

The manufacturer's instructions regarding temperature and procedure for storing materials which are subject to alteration of the original properties and cnaracteristics did to unsuitable storage must be strictly complied with and, if required, an adequate heat conditioning shall be provided for these materials.

When supplied in containers and packages they must not be thrown or dropped, not handled using hooks which could damage the container or the materials, either during loading/unloading or during successive handling, until their final use.

Storage of coating materials which are susceptible to deterioration or damages especially due to humidity, exposure to high thermal cconditions or other diverse weather conditions, shall be suitably stored and protected. These materials shall be

kept permanently in store, supported above the ground in a dry place, protected against the weather and transported for use only at the time and in quantities necessary for immediate application. Deteriorated materials shall not be used and replaced with no extra cost to COMPANY.

5.6 **Identification**

CONTRACTOR shall provide all pipes, bends, etc. greater than 2" with serial numbers as soon as possible and measure their length and state is on the pipes, etc. Pipes to be bent shall be measured prior to bending. Identification (i.e. letter, number and length) shall be indelible.

All serial numbers shall be recorded in a list, which shall also state appurtenant pipe numbers.

Beside recording the stamped - in pipe numbers, length of pipe and painted-on serial numbers, the stamped-in numbers of T-pieces, bends, valves, etc. and the batch numbers of bends, T-pieces, valves, etc. and the make of valves, shall also be recorded in said list.

Before a pipe length, pipe end, etc. is cut the painted serial number and stamped-in pipe number shall be transferred by CONTRACTOR in the presence of COMPANY to either side of the joint which is to be made by cutting, and the changes shall be recorded in the above mentioned list stating the (new) length. The results shall be such that all pipes, pups, etc. of diameter greater than 2" bear clear marks painted on.

CONTRACTOR shall explicitly instruct his staff that parts which cannot be identified must not be removed, except after permission by COMPANY.

As a general rule parts must be marked as described above before being moved. In no conditions may unmarked parts be incorporated into the WORK.

6.0 TRENCHING

6.1 **Location**

CONTRACTOR shall, excavate and maintain the pipeline trench on the staked center line of the pipeline taking into account the curves of the pipeline.

6.2 **Excavation**

6.2.1 CONTRACTOR shall, by any method approved by COMPANY, dig the pipeline trench on the cleared and graded Right-of-Way. In cultivable land and other areas specifically designated by the COMPANY, top 60mm of the arable soil on the pipeline trench top and 500mm on either side shall be excavated and stored separately to be replaced in original position after backfilling and compacting rest of the trench.

Suitable crossing shall be provided and maintained over the open ROW where necessary, to pemit general public, property owners or his tenants to cross or move stock or equipment from one side of the trench to the other.

Care shall be exercised to see that fresh soil recovered from trenching operation, intended to be used for backfilling over the laid pipe in the trench, is not mixed with loose debris or foreign material. The excavated material shall never be deposited over or against the strung pipe.

6.2.2 In steep slope area or on the hillside, before commencing the works, proper barriers or other protection shall be provided to prevent removed materials from rolling downhill.

6.2.3 On slopes where there is danger of landslide, the pipeline trench shall be maintained open only for the time strictly necessary. Forever, the COMPANY may require excavation of trench by hand, local route detours and limiting the period of execution of the works.

6.2.4 In certain slope sections before the trench cuts through the water table, proper drainage shall be ensured both near the ditch and the Right-of-Way in order to guarantee soil stability.

6.2.5 All sewers, drains ditches and other natural waterways involved in the execution of the works shall be maintained open and functional. The same applies to canals, irrigation canals, pipelines and buried facilities crossed by the ditch for which temporary pipeline shall be laid, if required, and proper temporary installations provided.

6.3 **Blasting**

Blasting for trenching and the related removal of scattered rock and debris caused by the blasting from the Right-of-Way and/or adjacent property, shall be performed by CONTRACTOR as part of his work.

Every possible precaution shall be taken to prevent injuries and damages to persons and properties during blasting operations, which shall be performed in accordance with Standard Rules for Blasting.

CONTRACTOR shall obtain necessary permits for storage and use of explosives and comply with the laws, rules and regulations of the respective Governmental agencies having jurisdiction thereof. No blasting will be allowed without prior and due notice given by CONTRACTOR to COMPANY, Government authorities, land-owners, property occupants, adjacent work crew, and other concerned parties.

CONTRACTOR shall employ only such workmen who are experienced in the type of work to be performed, to supervise, handle and use explosives.

6.3.1 Areas to be blasted are to be categorised as follows:

a) Where blasting is to be carried out beyond 50 meters away from any existing pipeline or structures (either above or below ground) the CONTRACTOR shall submit his proposed blasting procedure and perform a trial blast for COMPANY's approval.

b) Where blasting is to be carried out between 50 and 15 meters from any existing pipeline or structure (either above or below ground) the CONTRACTOR shall submit a procedure for controlled blasting e.g. break-holes, slit trench etc. which will also detail out safety precautions to safeguard the existing pipelines. This procedure will be approved by COMPANY prior to commencement and performing of trial blasting.

c) No blasting is allowed within 15 metres of any existing pipeline or structure (either above or below around).

6.3.2 All necessary precautions shall be taken to prevent stones from falling outside the Right-of-way and in cultivated areas and to avoid any damage to the installation and properties existing nearby.

6.3.3 Blasting and removal of debris shall be carried out prior to stringing the pipes.

6.3.4 Ground vibration due to blasting near the existing structures shall be continuously monitored using certified instruments to be provided by CONTRACTOR and approved by COMPANY and the peak particle velocities shall not exceed 50 mm/ sec.

COMPANY reserves the right to refuse blasting where possible danger exists to property, existing utilities or other structures. In such locations other methods of extracting rock shall be proposed by CONTRACTOR and shall be approved by COMPANY.

6.4 **Normal Cover and Trench Dimensions**

The trench shall be excavated to a minimum so as to provide, on both sides of the installed pipeline, a clearance as indicated in the job standard/ drawings and to a depth sufficient to provide the minimum cover as indicated below. The dimensions in the table below shall govern except as noted herein or as shown on the job standards or detailed construction drawings or as required by authorities having jurisdiction, whichever is greatest. Minimum depth of cover shall be measured from the top of pipe corrosion/ concrete weight coating (as applicable) to the top of undisturbed surface of the soil or top of graded working strip or top of road or top of rail whichever is lower. Fill material in working strip shall not be considered to add to the depth of cover. However, surface of fill material placed to fill hollows may be used to determine the depth of cover subject to prior approval by COMPANY.

Sl. No.	Location	Minimum Cover in meters
a)	Industrial, Commercial & Residential Areas	1.0
b)	Rocky Terrain	1.0
c)	Minor water crossings/ canals / drain / nala / stream	1.5
d)	River crossings for which scour depth is defined (below scour)	1.5
e)	River crossings (Bank width < 50 m) below lowest bed level)	1.5
f)	Other crossings (Bank width > 50 m) (below lowest bed level)	2.5 (for normal soil) 1.5 (for rocky strata)
g)	Water crossing by HDD (below least bed level)	2.5
h)	Uncased/ Cased Road Crossings/ Station approach	1.2
i)	Railroad Crossings	1.7
j)	Drainage, ditches at roads / railway crossings	1.0
k)	Marshy land and creek area	1.5

Notes :

In case pipeline is located within 1.5 m from any dwelling unit, the cover shall be increased by 300 mm over and above that specified.

6.5 Cutting and Removal of Paving

Whenever it is permitted by Authorities and / or COMPANY to open cut a paved road crossing, or where the line is routed within the road pavement, CONTRACTOR shall remove the paving in accordance with the restrictions and requirements of the authorities having jurisdiction thereof or as directed by COMPANY. The open cut for the road crossing shall be carried out only when the section of pipeline to be laid is complete. After laying the pipeline, backfilling shall be immediately performed and all the area connected with the works shall be temporarily restored.

Throughout the period of execution of such works, CONTRACTOR shall provide and use warning signs, traffic lights or lanterns, barricades, fencing, watchman, etc. as required by the local authorities having jurisdiction and/ or COMPANY.

For all roads, paths, walkway etc. which are open-cut, CONTRACTOR shall provide temporary diversions properly constructed to allow the passage of normal traffic with the minimum of inconvenience and interruptions.

The paving shall be restored to its original condition after the pipeline is installed.

6.6 **Extra Depth and Clearance**

At points where the contour of the earth way require extra depth to fit the minimum radius of the bend as specified or to eliminate unnecessary bending of the pipe according to customary good pipeline practice, or where a deep trench is required at the approaches to crossings of roadways, railroads, rivers, streams, drainage ditches, and the like, CONTRACTOR shall excavate such additional depth as may be necessary at no extra cost to the COMPANY.

CONTRACTOR shall excavate to additional depth where the pipeline approaches and crosses other pipelines, sewers, drain pipes, water mains, telephone, conduits, and other underground structures, so that the pipeline may be laid with at least 50 centimeters free clearance from the obstacle or as specified in the drawings, or such greater minimum distances as may be required by authorities having jurisdiction.

Where the pipeline crosses areas, whose easements specifically require greater than normal depths of cover, the trench shall be excavated to extra depth in accordance with the Right-of-way Agreements or as required.

CONTRACTOR shall excavate all such additional depths as may be necessary at no extra cost to the COMPANY.

6.7 **Grades, Bends and Finish of Trench**

The trench is to be cut to a grade that will provide a firm, uniform and continuous support for the pipe. Bends shall be made in the pipe at significant changes in grade of the trench. COMPANY reserves the right to set the grade of the trench and locate the bends if so desired, in which case CONTRACTOR shall excavate, at no extra cost, the trench and bend the pipe to such a grade. COMPANY desires to reduce to a minimum the required number of cold field bends to lay the pipe to conform to the general contour of the ground and maintain a normal cover. This can be accomplished by cutting the trench slightly deeper at the crest of ridges and by gradually deepening the trench in aproaches to crossings. Such trenching work shall be done by CONTRACTOR at no extra cost to the COMPANY.

COMPANY intends that there will be a minmum of hand grading of the trench bottom. However, to achieve this, CONTRACTOR will have to dig as square a bottom of the trench as possible with his equipment. This in part can be obtained by adjusting and

adopting the crumbling shoe and digging teeth of the trenching machines and by use of a drag behind the trenching machines or manually dressing-up the same. CONTRACTOR shall do such hand work in the trench as is necessary to free the bottom of the trench from loose rock and hard clods and to trim protruding roots from the bottom and side walls of the trench.

6.8 **Padding**

In all cases where rock or gravel or hard soil is encountered in the bottom of the trench, COMPANY will decide the exact extent of trench padding, that will be required. The thickness of the compacted padding shall not be less than 150mm. In those areas that are to be padded, the trench shall be at least 150mm deeper than otherwise required, and evenly and sufficiently padded to keep the pipe, when in place, at least 150mm above bottom of excavated trench.

Acceptable padding shall be placed under the pipeline before its installation, and around after installation to establish at both sides and on top of the pipe a permanent layer of padding. The thickness of compacted padding on top of pipe corrosion coating shall be at least 150mm. Padding materials that are approved by COMPANY shall be graded soil/ sand and/ or other materials containing no gravel, rock, or lumps of hard soil. Sand used for padding shall pass through sieve size ASTM-10 or ISO-2.00.

When specified in the CONTRACT, rock shield may be used in place of or in addition to sand padding as indicated above. Such rock shield shall be in accordance with the specification issued for the purpose and shall be subject to COMPANY approval.

6.9 **Protection of Trench**

CONTRACTOR shall keep the trench in good condition until the pipe is laid, and no claim is to be made to the COMPANY by reason of its caving either before or after pipe is laid.

All lumber, sheet-piling jacks or other materials, that may be necessary to shore the trench, in order to prevent caving are to be furnished and removed by CONTRACTOR.

CONTRACTOR shall dewater if necessary, using well point system or other suitable systems, shore, or do what else might be required to excavate the trench, install the pipe in it and backfill the trench in accordance with these specifications at no extra cost to COMPANY.

6.10 **Protection of Underground Utilities and Special Methods**

Details of some underground utilities, as far as acquired by COMPANY, shall be indicated in the Drawings. However, CONTRACTOR shall obtain plans and full details of all existing and planned underground services from the relevant Local Authorities and shall follow these plans closely at all times during the performance of work. CONTRACTOR shall be responsible for location and protection of all underground lines and structures. In special locations the use of trenching machine, backhoe may result

in damage to property and subsurface structures likely to be encountered during excavation. At such places, CONTRACTOR shall excavate the trench manually to same specification at no extra cost.

Where the pipeline crosses other underground utilities/ structures, the CONTRACTOR shall first manually excavate to a depth and in such a manner that the utilities/ structures are located.

Temporary under pinning or any other type of supports and other protective devices necessary to keep the interfering structure intact shall be provided by the CONTRACTOR at his own cost and shall be of such design as to ensure against their possible failure.

Despite all precautions, should any damage to any structure/ utility etc., occur, the Owner/ Authority concerned shall be contacted by the CONTRACTOR and repair shall forthwith be carried out by the CONTRACTOR at his expense under the direction and to the satisfaction of COMPANY and the concerned Owner/ Authority. If CONTRACTOR fails to repair in reasonable time, COMPANY reserves the right to have the repair executed at the cost of the CONTRACTOR.

6.11 Encroachments and Working near other utilities

In locations, where pipeline has to be laid in the body of a road, canal, dyke or other locations under jurisdiction of Government/ Public Bodies, the CONTRACTOR shall perform such work without extra compensation, according to the requirement of concerned Authorities. When it becomes necessary that CONTRACTOR has to resort to hand digging, well point, erection of sheet piling or any other special construction methods in these areas, no extra compensation shall be paid. CONTRACTOR shall contact the Authorities concerned in order to become familiar with their requirements.

In locations, where the pipeline has to be laid more or less parallel to an existing pipeline, cable and/ or other utilities in the Right-of-way, CONTRACTOR shall perform the work to the satisfaction of the Owner/ Authority of the existing pipeline/ cable/ utility. In such locations CONTRACTOR shall perform work in such a way that even under the worst weather and flooding conditions, the existing pipeline/ utilities remain stable and shall neither become undermined nor have the tendency to slide towards the trench.

CONTRACTOR shall be liable for any damage occuring to, or resulting from damage to other pipelines, underground structure/ utilities, as laid down in clause 6.10 of this specification.

6.12 Provisions for negative buoyancy to the pipe

CONTRACTOR shall check if up-floating danger is present in open trench and then shall take appropriate measures to prevent up-floating such as applying soil dams and dewatering of trench or temporary filling of water into the line (in exceptional cases).

In the case of water on the ditch bottom when the pipeline is being laid, the ditch shall be drained to the extent and for the time required to make a visual inspection of the ditch bottom. After this inspection, the presence of water will be allowed provided its level does not cause sliding of the ditch sides and pipe floating before backfilling when no concrete weighting is provided.

The water pumped out of the ditch shall be discharged into a natural water course.

Wherever up-floating of the pipeline after backfilling is to be reckoned with, anti-buoyancy measures shall be provided by CONTRACTOR for areas indicated in the drawings or as may be encountered during construction, using one or a combination of the following methods :

- weighting by applying a continuous concrete coating around the pipe;
- weighting by installing saddle weights;
- installing metal anchors screwed into the suboil in pairs;
- deeper burial of pipeline;
- provision of select backfill material.

The above provisions shall be in accordance with the relevant specifications and/ or job standards/ drawings.

7.0 BENDING

CONTRACTOR shall preferably provide for changes of vertical and horizontal alignment by making elastic bends. CONTRACTOR may provide cold field bends, at its option for change of direction and change of slope. COMPANY at its option, may authorise fabricated bends for installation at points where in COMPANY's judgement the use of such bends is unavoidable.
Overbends shall be made in such a manner that the center of the bend clears the high points of the trench bottom. Sag bends shall fit the bottom of the trench and side bends shall conform and leave specified clearance to the outside wall of the trench.

7.1 Elastic Bends

The minimum allowable radius for elastic bends in the buried pipeline including that for continuous concrete weight coated pipe shall be in accordance with relevant job standards. The elastic bend shall be continuously supported over its full length. A radius smaller than permitted in elastic bending shall require a cold bend.

7.2 Cold Field Bends

7.2.1 The radius of cold field bends shall not be less than 40 times the pipe nominal diameter for pipe diameter 18 inch and above and shall not be less than 30 times the pipe nominal diameter for pipe diameter less than 18 inch.

7.2.2 CONTRACTOR shall use a bending machine and mandrel and employ recognized and accepted methods of bending of coated pipe in accordance with good pipeline construction practice. However, bending machines shall be capable of making bends without wrinkles, buckles, stretching and with minimum damage to the coating.

7.2.3 CONTRACTOR shall, before the start of the work, submit and demonstrate to COMPANY a bending procedure which shall conform with the recommendations of the manufacturer of the bending machine. The procedure shall include amongst other steps - lengths, maximum degree per pull and method and accuracy of measurement during pulling of the bend. This procedure and the equipment used shall be subject to COMPANY's approval.

7.2.4 Pipes with longitudinal welds shall be bent in such a way that the weld lies in the plane passing through the neutral axis of the bend which shall be installed positioning the longitudinal weld in the upper quadrants. If horizontal deviations are to be achieved by joining more adjacent bends, the bending of the pipe lengths shall be made by positioning the longitudinal welds alternatively 70mm above and below the plane passing through the neutral axis in such a way that the bends are welded with the longitudinal welds displaced by about 150mm and situated in the upper quadrants. In case of vertical bends formed from a number of pipe lengths, the longitudinal welds shall be positioned on the plane passing through the neutral axis of the bend to the right and left alternatively.

7.2.5 The pads, dies and rolls of the bending equipment shall have relatively soft surfaces to avoid damage to the pipe coating. Where applicable, fully retaining bending shoes shall be used. Roller type bending machines are preferred.

7.2.6 The ends of each bent length shall be straight and not involved anyway in the bending. The length of the straight section shall permit easy joining. In no event shall the end of the bend be closer than 1.5m from the end of a pipe or within one meter of a girth weld.

7.2.7 The ovalisation caused on each pipe by bending shall be less than 2.5% of the nominal diameter at any point. Ovalisation is defined as the reduction or increase in the internal diameter of the pipe compared with the nominal internal diameter. A check shall be performed on all bends in the presence of COMPANY by passing a gauge consisting of two discs with a diameter equal to 95% of the nominal internal diameter of the pipe connected rigidly together at a distance equal to 300mm.

7.2.8 The wall thickness of finished bends, taking into account wall thinning at the outer radius, should not be less than the design thickness. An indication of wall thinning as a percentage is given by the following empirical formula :

$$\text{Wall Thinning} = \frac{50}{n + 1}$$

Where 'n' is the inner bend radius divided by pipe diameter. Pipes with measured wall thickness greater than the nominal wall thickness (i.e. with +ve tolerance) shall normally be used for making cold field bends.

7.2.9 Cold bent pipes on site shall have the corrosion coating carefully checked with the aid of a holiday detector for cracks in the coating down to the pipe wall. It must also be checked whether the coating has disbonded from the pipe wall during bending by beating with a wooden mallet along the outer radius. Any defects or disbonding of the coating caused during bending (also forced ridges in the coating) shall be repaired at the CONTRACTOR's expense in accordance with COMPANY approved procedures.

7.2.10 When pipelines are laid in parallel, the horizontal bends shall be concentric.

7.3 Miter and Unsatisfactory Bends

All bends showing buckling, wrinkles, cracks or other visible defects or which are in any way in disagreement, in whole or in part, with this specification shall be rejected.

No miter bends shall be permitted in the construction of the pipe line. CONTRACTOR shall cut out and remove any bend or bends which do not meet the specifications and shall replace the same with satisfactory bends at no additional cost to the COMPANY. In the event the CONTRACT provides for supply of line pipe by COMPANY, the pipes required for replacement will be furnished by COMPANY, but the cost of replacement of such pipes shall be borne by CONTRACTOR.
Cutting of factory made bends and cold field bends for any purpose are not permitted.

8.0 LINING UP AND WELDING

Each length of pipe shall be thoroughly examined internally and externally to make sure that it is free from visual defects, damage, severe corrosion (sea water pitting), dirt, animals or any other foreign objects. Each length of the pipe shall be adequately swabbed, either by use of canvas belt disc of proper diameter or by other methods approved by the COMPANY. Damaged/corroded pipes shall be kept separate. Each length of pipe shall be pulled through just before being welded.

All rust and foreign matters shall be removed from the beveled ends by power operated brush. This shall be affected inside & out side and for a minimum distance of 25 mm from edge of bevel. The bevel shall be thoroughly inspected at this stage. Should laminations, spilt ends or manufacturing defects in the pipe observed, the length of the pipe containing such defects shall be removed from the line in accordance with relevant specification.

Contractor shall align and weld together the Joints of pipe so as to construct a continuous pipeline. All welds in the pipeline made by Contractor shall be of strength equal to that of pipe. All welding shall conform to Company's welding specifications enclosed with the Contract.

8.1 Pipe Defects and Repairs

It is CONTRACTOR's responsibility to repair all internal and/or external defects.

8.1.1 Acceptability of defects in the pipe detected during inspection at the work site shall be determined in accordance with latest edition of COMPANY's own material specification or CODE ANSI B31.8/B 31.4 whichever is more stringent.

8.1.2 The maximum permissible depth of dents in pipes upto and including $12^{3/4"}$ OD is 5mm and for pipes over $12^{3/4"}$ OD is 2% of the nominal pipe diameter.

8.1.3 Dents which contain a stress concentrator such as scratch, gauge, arc burn or groove, and dents located at the longitudinal, spiral or circumferential weld shall be removed by cutting out the damaged portion of pipe as a cylinder.

8.1.4 Repair on line pipe shall be executed as specified in COMPANY's material specification or Code ANSI B 31.8/B 31.4, whichever is more stringent. A record of all repairs is to be maintained by CONTRACTOR. This record, provided with the pipe identification number is to be submitted to the COMPANY.

8.1.5 If due to cutting or repairs, the pipe identification number is removed, it shall be reprinted immediately by CONTRACTOR in the presence of COMPANY. In the event, the CONTRACT provides for supply of line pipe by COMPANY, CONTRACTOR shall be charged for any pipe length due to loss of identification number. No pipe without identification number shall be transported and/or welded into the pipeline.

8.1.6 Repair of damaged pipe ends by hammering and/or heating is not allowed. If the dented area is minor and at least 200mm away from the pipe end, and the steel is not stretched, severed, or split in the COMPANY's opinion, the pipe may be straightened with a proper jack.

8.2 Pipe Handling And Skid Spacing

8.2.1 When lifting pipe, care must be taken not to kink or overstress it. Proper pipe slings approved by COMPANY shall be used. CONTRACTOR shall submit his method of skidding and skid spacing for COMPANY's approval. A strip of soft material shall be placed in between skid and pipe to protect the external coating of the pipe. The material shall be approved by the COMPANY.

8.2.2 The maximum skid spacing is not allowed before the stringer bead and the top and bottom reinforcements are completed, provided that the distance between the incomplete weld and the skid shall not exceed 9 (nine) percent of the skid spacing.

8.2.3 Skids shall be atleast 1.20 meter long. For pipe with an O.D. of 12-3/4 inch and larger the skids in contact with the pipe shall have a width of at least 200mm. For pipe with an O.D. of less than 12 inch the skids in contact with the pipe shall have a width of atleast 150mm. Pipe supports shall be stable, so that pipe movement will not cause the supports to move. Skids shall not be removed under a string before lowering in.

The welded pipe shall be maintained on skids at the minimum distance of 500mm above ground. Crotches shall be installed at frequent intervals (atleast every 10th support) with a greater number required at bends and undulation grounds.

8.3 **Night Caps**

At the end of each day's work or every time when joining and welding operations are interrupted, the open ends on the welded strings of pipes shall be capped with a securely closed metal cap or plug as approved by COMPANY so as to prevent the entry of dirt, water, or any foreign matter into the pipeline. These covers shall not be removed until the work is to be resumed. The caps/plugs used shall be mechanical type and shall not be attached to pipe by welding or by any other means which may dent, scratch or scar the pipe.

8.4 **Temporary Caps**

Whenever the welded strings of pipes are left open at intervals to be tied in later after an appreciable time lag, under roads, railroads, rivers, marshy crossings, ets., temporary caps approved by COMPANY shall be welded to the ends of the pipe.

9.0 LAYING OF PIPE

9.1 **Lowering In Trench**

9.1.1 Lowering can start after removal from ditch bottom of all off cuts, pipe supports, stones, roots, debris, stakes, rock projections below underside of pipe and any other rigid materials which could lead to perforation or tearing of the coating. Sand padding and / or rock shield shall be provided as required in accordance with clause 6.8 of this specification.

9.1.2 Lowering shall follow as soon as possible, after the completion of the joint coating of the pipeline. In the case of parallel pipelines, laying shall be carried out by means of successive operations, if possible without interruption.

9.1.3 Before lowering in, a complete check by a full circle holiday detector for pipe coating and for field joint coating shall be carried out and all damages repaired at CONTRACTOR's cost. All points on the pipeline where the coating has been in contact with either the skids or with the lifting equipment during laying, shall be carefully repaired. If, after checking, it becomes necessary to place the pipeline again on supports at the bottom of the trench, these must be padded in such a way as to prevent damage to the coating, thus avoiding necessity for further repairs when the pipe is finally raised and laid. Before the last operation, a check must be made of the coating at points of contact with the supports.

9.1.4 Before lowering in, short completed sections of the pipeline shall be cleaned with compressed air in order to remove all dirt, etc. from the inside of pipe sections.

9.1.5 The pipeline shall be lifted and laid using, for all movements necessary, suitable equipment of non-abrasive material having adequate width for the fragility of the coating. Care shall be exercised while removing the slings from around the coated pipe after it has been lowered into the trench. Any damage caused to the coating shall be promptly repaired. Lowering in utilizing standard pipe cradles shall be permitted if CONTRACTOR demonstrates that pipe coating is not damaged. No sling shall be put around field joint coating.

9.1.6 Wherever the pipeline is laid under tension, as a result of an assembly error (for example, incorrect positioning of bends, either horizontal or vertical), the trench shall be rectified or in exceptional cases a new assembly shall be carried out, to be approved by COMPANY, so that it fits the excavation and the laying bed.

9.1.7 Laying shall be carried out under safe conditions so as to avoid stresses and temporary deformations of the equipments which may cause damage to the pipeline itself and to the coating. In localised points where the right-of-way is restricted to the minimum necessary for the transit of mechanical equipment, the laying shall be carried out using other suitable means. The pipe shall be placed on the floor or the excavation, without jerking, falling, impact or other similar stresses. In particular, care must be taken that the deformation caused during the raising of the pipe work from the supports, does not exceed the values for the minimum allowable radius of elastic curvature, so as to keep the stresses on the steel and on the coating within safe limits. The portion of the pipeline between trench and bank shall be supported by as many side-booms as required and approved by COMPANY for holding the line in gentle S-curve maintaining minimum elastic bend radius as specified in job standard. Lowering in and back-filling shall preferably be carried out at the highest ambient temperature.

9.1.8 The pipeline must be laid without interruption for the whole or the length of section available. Where water is present, no laying shall be permitted until the ditch has been drained to the extent and for the time necessary to make visual inspection possible of the bed on which the pipe is to be laid. Following such inspections, the presence of water will be permitted, provided that it is not so high as to cause cave-in of the walls of the trench or floating of the pipeline before backfilling, when weighting is not provided for the pipe.

9.1.9 CONTRACTOR shall take precautions immediately after lowering in to prevent the movement of the pipe in trench.

9.1.10 In laying parallel pipelines in the same trench, the minimum distances between the pipeline indicated in the approved drawings shall be observed. Once the first pipeline has been positioned, it shall in no way be disturbed by laying of the subsequent pipeline.

At every seven meters along the trench sand/earth filled bags shall be placed between the parallel pipelines so as to ensure maintenance of the minimum stipulated distance between the parallel lines.

9.2 **Overhead Sections and Sections in Tunnel**

9.2.1 The following works shall be completed before proceeding with the assembly and laying of overhead pipelines :

- Construction of the pipe support structures or of mounts on supports.
- Paints and/or coating of the pipework, as indicated in the engineering specification.

9.2.2 The erection of the supports shall be carried out taking care that the elevation and alignment is in accordance with the drawings.

In the case of metal work supports, prefabrication and/or assembly shall take into account the maximum allowed free span and the supports shall not interfere with the pipeline welds.

9.2.3 In case roller supports are used, the roller shall be lubricated, then checked for smooth rotation and, in case of seizure, the defect shall be repaired or roller shall be replaced. In the case of overhead section where the pipeline is slanting, the alignment of the end supports shall be made after placing the pipeline in position. Before installation of the pipe section, all the rollers shall be perfectly centered acting on the seat of the support plates.

The above alignment operations shall be carried out before connecting the overhead section with the ends of the buried section.

9.2.4 Lifting, moving and laying of the pipeline shall be carried out in accordance with the provisions of clause 9.1.5.

An insulation sheet shall be installed to isolate the pipe from the support or support from the earth.

The sheet shall be hard polyethylene at least 5mm thick.

It shall extend at least to 1cm outside the saddles or clamps.

9.2.5 Moving supports, if any, shall be centered on their support and allow for a movement of at least 300mm in both directions.

9.2.6 A comprehensive report/method statement on the laying operation to be used shall be submitted to the COMPANY well in advance for approval. The report as a minimum shall include, but not limited to the following:

(a) Method of installation by lifting (as a preferred method).
(b) Pulling method and related calculations, whenever lifting method cannot be used.
(c) Pulling device and its characteristics
(d) Method of anchoring the pulling device
(e) Characteristics of the pulling rope

(f) Braking device, if any
(g) Pipeline assembly systems.

10.0 BACK-FILLING

10.1 Backfilling shall not be done until the pipe and appurtenances have the proper fit and the pipe is following the ditch profile at the required depth that will provide the required cover and has a bed which is free of extraneous material and which allows the pipe to rest smoothly and evenly. Before any such work is done, it shall be the CONTRACTOR's responsibility to first secure the approval of COMPANY. If any backfilling is done without COMPANY's approval, COMPANY will have the right to require removal of the backfill for examination, and the cost of such uncovering and refilling shall be borne by CONTRACTOR. Backfilling of trench in water courses shall be carried out as per the relevant specifications issued for the purpose.

10.2 Backfilling shall be carried out immediately after the pipeline has been laid in the trench, inspected and approved by the COMPANY, so as to provide a natural anchorage for the pipeline, thus avoiding long exposure of coating to high temperature, damaging actions of adverse weather conditions, sliding down of trench sides and pipe movement in the trench. If immediate back filling is not possible, a covering of atleast 200mm of earth, free of rock and hard lumps shall be placed over and around the pipe and coating.

On no account the top soil from the ROW be used for this purpose. In general, the trench shall be dry during backfilling. Deviations there of must have prior approval of the COMPANY. The backfill material shall contain no extraneous material and/or hard lumps of soil which could damage the pipe / coating or leave voids in the backfilled trench. After the initial backfill has been placed into the trench to a level slightly above the surrounding ground, CONTRACTOR shall compact the backfill material. The surplus material shall be neatly crowned directly over the trench and the adjacent excavated areas on both sides of the trench as per clause 6.2.1, to such a height which will, in COMPANY's opinion, provide adequately for future settlement of the trench backfill during the maintenance period and thereafter. The crown shall be high enough to prevent the formation of a depression in the soil when backfill has settled into its permanent position. Should depression occur after backfill, CONTRACTOR shall be responsible for remedial work at no extra cost to COMPANY. Surplus material, including rock, left from this operation shall be disposed of to the satisfaction of land owner or authority having jurisdiction at no extra cost to the COMPANY.

For further requirements reference is made to Section of 14.0 "Clean-up and Restoration of Right-of-Way" of this specification.

10.3 Rock, gravel, lumps of hard soil or like materials shall not be backfilled directly onto the pipe unless 'padding' and/or rock shell has been provided as per Section 6.0 of this specification. When "Padding" as described in Section 6.0 of this specification is to be used, the following shall be applicable.

Where rock, gravel, lumps of hard soil or like materials are encountered at the time of trench excavation, sufficient earth, sand or select backfill materials shall be placed around and over the pipe to form a protective cushion extending at least to a height of 150mm above the top of the pipe. Select backfill materials for padding that are acceptable to COMPANY shall be soil, sand, clay or other material containing no gravel, rock or lumps or hard soil. Whether such padding material would be taken from the adjacent spoil bank or imported from elsewhere shall be directed by COMPANY. All these works shall be carried out by CONTRACTOR at no extra cost to COMPANY. Loose rock may be returned to the trench after the required selected backfill material has been placed, provided the rock placed in the ditch will not interfere with the use of the land by landowner, or tenant.

10.4 When the trench has been dug through drive ways or roads, all backfills shall be executed with sand or a suitable material as approved by COMPANY and shall be thoroughly compacted. In certain cases, special compaction methods, such as moistening or ramming of the backfill in layers may be required by COMPANY. COMPANY and any public or private authority having jurisdiction over a road, street or drive way may require that the surface of the backfill be graveled with crushed rock or some other purchased material and the road shall be repaved. In such instances, CONTRACTOR shall comply with said requirements at no extra cost to COMPANY.

10.5 Trenches excavated in dykes which are the property of railways or which are part of main roads shall be graded and backfilled in their original profile and condition. If necessary, new and/or special backfill materials shall be supplied and worked-up. The materials required may include gravel, special stabilization materials or stabilized mixtures. However, special processing and/or compacting methods shall require the approval of COMPANY and/or competent authorities.

10.6 The trench in irrigated and paddy fields shall be backfilled to within 300mm of the top, then rammed and further backfilled until the trench is completely backfilled. Surplus material remaining after the operation shall be spread over the ROW as specified in Section 14.0 "Clean-up and Restoration of Right-of-Way", of this specification.

10.7 At the end of each day's work, backfilling shall not be more than 500 meters behind the head end of lowered-in pipe, which has been padded and approved for backfill. The backfill shall be maintained by CONTRACTOR against washouts etc., until the completion and final acceptance of the work by COMPANY.

10.8 CONTRACTOR shall furnish materials and install breakers in the trench in steep areas (slope generally 10% and more) for the purpose of preventing erosion of the backfill. The type of breakers installed shall be as per the approved drawings. Breakers shall be constructed of grout bags filled with a mixture of 4:1 Sand:Portland cement at COMPANY's direction. CONTRACTOR may propose other methods such as foam dams etc. which shall be subject to approval by COMPANY. Such works shall be at no extra cost to COMPANY. CONTRACTOR shall pay attention to the direction of backfilling in such steep areas.

10.9 When backfilling the trenches in sloping terrains or steep areas, where in the opinion of the COMPANY, the backfill may be washed out of the trench, sheet piling or other effective water breakers across the trench shall be provided by CONTRACTOR. This is to divert the flow of water away from the trench into normal drainage followed before laying the line. In no case, the water is to be drained via the trench or via channels other than those followed before the line was laid.

10.10 CONTRACTOR shall leave the pipe uncovered at certain locations to allow COMPANY to survey the center line of the pipe and the level of the pipeline in the backfilled trench. Within 48 hours after backfilling, COMPANY shall have carried out such survey and informed CONTRACTOR of any realigning, if required. Thereafter CONTRACTOR shall compact the backfill.

The maximum allowable deviation from the centerline for land sections as staked out by COMPANY and as referenced by CONTRACTOR after backfilling is limited to:

Pipeline dia upto and including 24" : 200mm

Pipeline greater than 24" : 300mm

10.11 Before backfilling of the trench, CONTRACTOR shall comply with the requirements of Clause 6.12 of this specification.

10.12 Stabilization of backfill shall be carried out by the CONTRACTOR in sandy areas and other such places to obtain consolidated cover as directed by the COMPANY. CONTRACTOR shall carry out the stabilization over the pipeline at no extra cost to COMPANY.

The backfill shall be stabilized preferably with 150mm layer of marl, mattresses of gatch other than straw or other stable materials. The width of stablisation shall be atleast 5.0 meters on either side of the pipeline, plus one meter for every 10 meters height of dune (where the line passes through the dune areas).

10.13 Temporary workers shall be installed during backfilling and the survey as per clauses 10.10 to locate the pipeline axis. These markers shall then be replaced with permanent pipeline markers.

10.14 Backfilling shall be preferably carried out at the highest ambient temperature.

11.0 TIEING-IN

11.1 The unconnected sections of the pipe line at various locations have to be tied in after the sections are coated, lowered and backfilled. The sections to be connected shall have at the ends, sections of over lapping, uncovered pipe of sufficient length to absorb, without inducing excessive stresses in the steel, small displacements necessary for perfect alignment and connection of the ends.

11.2 Tie-in shall preferably be carried out at ambient temperatures corresponding to the average operating temperature in the case of a pipeline conveying fluids at normal temperatures and at the maximum ambient temperature in the case where the pipeline is carrying fluids at high temperature.

11.3 CONTRACTOR shall carry out tie-in-welding (including necessary cutting, bevelling, grinding of pipe weld seams and line-up etc.) cleaning, priming, coating and backfilling for the tie-in portion as per relevant specifications. CONTRACTOR shall also excavate the required bell-holes for the connection. Bell-holes made to facilitate welding shall provide adequate clearance to enable the welders to exercise normal welding ability and skill. All tie-in welds shall be radiographically examined.

11.4 The tie-in should be done in such a way as to leave a minimum of strain in the pipe. If necessary, with respect to the trench, realigning of the pipe shall be done to eliminate force or strain in the pipe by the CONTRACTOR at no extra cost to COMPANY.

11.5 If a pup end cannot be avoided for tie-in, the minimum length that shall be added is 1.0 meters and two or more such pups shall not be welded together. All cut-off lengths greater than 1.0 meters shall be moved ahead in order to be welded into the pipeline at a suitable location. Tie-in with two or more pups may be used provided that they each have minimum length of 1.0 meter and are separated by an entire length of pipe. In no case more than three (3) welds shall be permitted on a 10 meter length of pipeline.

11.6 In connecting pipes, special items, fittings and equipment where different wall thickness are to be welded, CONTRACTOR shall follow the procedures indicated in ANSI B31.8/ANSI B31.4, as applicable. The required tapering shall be done by CONTRACTOR at no extra cost to COMPANY.

11.7 For tie-in of adacent sections of pipeline already pressure tested, the pup used for tie-in shall be of single length or off-cuts of pipe which have already been hydrostatically tested. CONTRACTOR shall take care that sufficient number of pretested pipes with different wall thicknesses are readily available.

12.0 SPECIAL INSTALLATIONS ON THE PIPELINE.

12.1 General

12.1.1 In addition to constructing the pipeline, CONTRACTOR shall also install certain other auxiliary facilities and appurtenances.

CONTRACTOR shall do all work necessary at each of the installations to provide facilities which are complete in all respects and ready for operation.

Without limiting the generality thereof, the work required to complete the installations shall, where applicable, include all site surveys, site preparation, filling, grading, fencing, foundations, installation of block valves, side valves, pipework, pipe supports, pressure gauges, mechanical facilities, civil work, painting, installation of all electrical

equipments, motors, cables, conduIt, wiring and fixtures and hooking up of same; installation of all instruments, piping, valves and fittings; mount all instruments and make all piping and electronic connections, etc.

On completion, all elements of each installation shall be checked our and tested for full and correct operation in the presence of and to the satisfaction of COMPANY. All work shall be carried our strictly in accordance with the appropriate codes, the approved drawings, and this and other related specifications.

CONTRACTOR shall fabricate all piping and install valves and fittings as required by the detailed engineering drawings prepared by him and approved by COMPANY.

Stainless steel lines will be "swaged" using permanent fittings installed with a hydraulic device.

Cold bending for the fitting of 1/2" and 1/4" pipes is allowed when special bending tools are used with guides to prevent flattening. The minimum radius allowed shall not be less than R = 10 D where D is the outside diameter of pipe.

The bending tool shall be subject to COMPANY's approval.

CONTRACTOR shall ensure that the piping assemblies are not in a strain prior to the final bolting or welding. CONTRACTOR shall also ensure that all equipment and piping are thoroughly swabbed clean of all dust, refuse, welding-spatter, scale, or any potentially detachable matter prior to the tie-in or final bolting.

12.1.2 **Dimensional tolerances.**

These tolerances apply to in line items and corrections for other lines. These tolerances can be executed on items such as vents, drains, dummy supports, field supports, temperature and pressure connections, where the deviation will not affect another spool.

a) General dimension such as face to face, face or end to end, face or end to center, and center to center : ± 3 mm.
b) Inclination of flange face from true in any direction: 4 mm per meter.
c) Displacement of branch connection from indicated location: ± 1.6mm. When multiple branches are involved, the displacement of the branches shall not exceed 3mm from a common point.
d) Rotation of flange bolt holes shall not exceed 1.6 mm.

12.1.3 **Flanged connections.**

CONTRACTOR shall ensure that all flange faces are parallel and centered, according to standard practice, prior to final bolting. CONTRACTOR shall not use bolting forces as a means for attaining alignment. A gasket of proper size and quality shall be installed between the flanges at each joint.

Bolts shall be tightened in diagonal sequence and shall be centered with equal amounts of thread visible on both sides. Bolts shall be uniformly tightened to produce a leak-proof joint. Bolts that yield during tightening shall be remover and discarded. It is mandatory that a torque wrench is used for bolt tightening.

12.1.4 **Threaded connections.**

Damaged threads shall be cut from the end of a run and the pipe shall be rethreaded.

CONTRACTOR shall properly align all threaded joints. Pipe entering unions shall be true to centreline so the union will not be forced during tightening. The threaded pipe shall not project through fittings to cause interference with valves or other operating mechanisms.

Except for the threaded connections of instruments, which will require periodic testing and maintenance, all threaded connections shall be seal welded. The latter joints shall be made up without pipe joint compound and with a minimum of oil from the threaded cutter. Seal welds should taper into the pipe with as little discontinuity as possible and should cover all threads.

12.1.5 **Welded connections**

Where the Ends of the piping components being welded have an internal surface misalignment exceeding 1.6mm, the wall of the component extending internally shall be trimmed by machining so that the adjoining internal surfaces will be approximately flush. All welding shall be performed in accordance with the specification " Specification for welding of pipelines and related facilities".
Tie - ins between fixed points shall be made at maximum ambient temperature.

.

12.1.6 **Civil Work**

Civil work shall be provided in accordance with Specifications issued for the purpose.

12.1.7 **Painting**

All exposed surfaces like piping, valves, structures, and miscellaneous appurtenances shall be painted in accordance with the specifications issued for this purpose. The corrosion coating on pipe surface will end approximately 0.3 meter above the finish grade and it will be necessary for CONTRACTOR to provide a clean interface at the junction of the protective coating and the paint.

12.1.8 **Coating of buried-Installations, etc.**

All buried valves, insulating joints, flowtees, bends, other in-line fittings and appurtenances shall be coated with minimum three coats of approved quality of coal-tar epoxy or any other equivalent suitable COMPANY approved coating at no extra cost to the COMPANY. For buried pipes either heat shrink tapes conforming to COMPANY's specification or coal tar epoxy shall be used. CONTRACTOR shall submit to COMPANY

a report used alongwith all the test certificates. Only after obtaining written approval from the COMPANY, CONTRACTOR shall commence the work of coating.

12.1.9 **Clean-up**

After all required tests have been concluded satisfactorily CONTRACTOR shall clean up the site as laid down in the specifications issued for the purpose. The Site finish shall be graded in accordance with the approved drawings.

12.2 **Installation of Valves and Valve Stations**

12.2.1 Block and sectionalising valve stations shall be installed as shown on the approved drawings. It is CONTRACTOR's responsibility to have the units completely assembled, tested and made fully functional including all related instruments etc.

12.2.2 The civil and structural work shall be carried our in accordance with the relevant specifications issued for the purpose and in accordance with the approved drawings as directed by COMPANY. This work as a minimum shall include clearing, grading, fencing, foundations, etc, as required. All above ground structures shall be painted as per the specification and color code given by the COMPANY.

12.2.3 A suitable concrete foundation as directed by COMPANY shall be constructed on which the valve shall be firmly installed, after embedding an insulating sheet of hard polyethylene with a thickness of atleast 5mm or equivalent. Such insulating sheet is also to be installed under pipe clamps, etc.

12.2.4 Valves with flow arrows shall be installed according to the normal flow in the pipeline. During, welding, the valves shall be in fully open position. In addition all manufacturer's instructions shall be followed.

Care shall be taken to avoid entry of sand particles etc. to valve body, seals etc. during transportation, storage, assembly and installation.

12.2.5 For valves and piping installed below ground and/or above ground, the anti-corrosion coating/painting shall be as per the requirements of the relevant specifications issued for the purpose. The anti-corrosion coating below ground shall extend upto 300mm above grade at the lowest point.

12.2.6 Sectionalizing valves shall be installed on sections of the pipeline in the horizontal position only or with an inclination not greater than that allowed by the valve manufacturer. Installation shall be done in such a way that there is no strain in the welded joint while the pipeline at upstream and downstream sides are straight.

12.2.7 All valves shall always be handled using equipment and methods to avoid impact, shaking and other stresses. In particular, the equipment and tools for lifting and handling shall never be done through handwheel, valve stem, joints and other parts which may suffer damage.

12.2.8 All sectionalizing valve and any other inline assemblies shall be prefabricated and tested hydrostatically ex-situ as per applicable specification. All such assemblies shall be installed at the locations shown in the drawings only after successful completion of the hydrostatic test and dewatering. Thereafter the ends of the assembly shall be closed off. CONTRACTOR shall carry out necessary excavation, cutting, bevelling and welding of the tie-ins required for the installation of such assembly. The tie-in joints shall be radiographically examined over 100% length and also 100% ultrasonically examined prior to backfilling. All works shall be executed in accordance with the relevant specifications issued for the purpose.

12.3 **Installation of Scraper Launchers and Receivers**

12.3.1 Scraper stations shall be fabricated and installed as per the approved drawings and whenever applicable as per the requirements of clause 12.2 of this specification. It is CONTRACTOR's responsibility to have the units completely assembled, tested and made fully functional including all instruments & related piping.

12.3.2 The civil and structural works for the scraper stations shall be carried out as per the relevant specifications, in accordance with the drawings and as directed by the COMPANY. The work as a minimum shall include site survey, site preparation, clearing, grading, fencing, foundations, etc. as required.

12.3.3 It shall be CONTRACTOR's responsibility to maintain elevations shown on the approved drawings and to carry out any pipework adjustments, necessary for this purpose. Field cuts shall be square and accurate and field welds shall not be performed under stress of pipe ends.

12.3.4 The painting for the scraper stations shall be carried out as per "Specifications for Painting". The underground sections shall be coated as specified for the pipeline upto atleast 300mm above grade.

12.3.5 The hydrostatic testing of the scraper stations shall be executed after installation in accordance with the relevant specification issued for the purpose.

12.4 **Installation of Insulation Joints**

12.4.1.1 Insulation joints shall be installed at the locations shown in the drawings. CONTRACTOR shall obtain approval from the COMPANY before installation of the insulation joints.

12.4.2 Handing and installation of the insulating joints shall be carried out with all precautions required to avoid damage and excessive stresses and that the original pup length is not reduced.

12.4.2 The insulating joints and the welded joints shall be protected by external coating as per relevant specifications issued for the purpose.

12.4.4 The in-line inserting shall be made on the buried pipeline; care shall be taken to operate at an external temperature as close as possible to the pipeline operating temperature.

The joints shall be inserted on straight sections and laid on a fine sand bed.

12.4.5 During the execution of the in-line connection welding, the propagation of heat shall be avoided. To achieve this, the joint shall be kept cold by means of nags continuously wetted.

12.4.6 Insulating joints shall be electrically tested before welding into the pipeline. The electrical conductance test shall be carried out using a Megger. Measurement of the insulation resistance across the joints shall be approx. one (1) Mega Ohm. The tests shall be repeated after installation and welding of the joint into the pipeline to verify that the assembly is undamaged.

13.0 WORKING SPREAD LIMITATIONS

CONTRACTOR shall, in general, observe the following maximum distances between the working mainline spread:

Between ROW grading, clearing and backfilling	:	30 Kms
Between backfilling and final clean-up	:	05 Kms

The above limitations do not apply to point spreads such as continuous rock blasting, river crossing, etc.

Any deviations from the above shall require prior approval of COMPANY. COMPANY reserves the right to stop the work, in case the approved spread limitations are exceeded and CONTRACTOR shall not be paid any compensation for stoppage of work.

14.0 CLEAN-UP AND RESTORATION OF RIGHT OF WAY

14.1 CONTRACTOR shall restore the ROW and all sites used for the construction of pipelines, water crossing and other structures in accordance with COMPANY's instructions, and deliver them to the satisfaction of COMPANY.

14.2 **Surplus Materials**

The following stipulations shall apply in case CONTRACT provides for supply of line pipe, bare and/or corrosion coated, by COMPANY.

All surplus and defective materials supplied by COMPANY shall be collected by CONTRACTOR and delivered to designated stockpile areas.

All Pipe-ends shorter than 1.0m shall be returned to COMPANY being scrap, all pipes longer than 8.0m shall be reconditioned (bevels, coating, provided with pipe letter,

number and length) and be returned to COMPANY's designated stockpile areas together with all undamaged, unused COMPANY supplied materials. All pieces between 1.0 and 8.0m shall be charged to the CONTRACTOR by COMPANY. CONTRACTOR shall record these returned materials in the Material account, to be prepared by him.

14.3 **Disposal**

14.3.1 All surplus and defective materials supplied by CONTRACTOR and all trash, refuse and spoiled materials shall be collected and disposed of by CONTRACTOR.

14.3.2 The ROW shall be cleared of all rubbish, broken skids, empty cans, card board, sacks, stamps, trash, and leftover construction material. All burnable matter shall be burned, but only after obtaining appropriate permits for such burning. If burning is not allowed, CONTRACTOR shall haul the clean-up material to approved dumping area. All scrap metal and unburnable material shall be disposed of, in an appropriate manner, but never be buried in the ROW.

14.3.3 Surplus soil can only be removed from the Owner's plot after authorisation by COMPANY.

14.3.4 All dumping fees connected with the disposal of materials shall be to the account of CONTRACTOR.

14.3.5 All loose stones and rock exposed by the construction operations and scattered over the ROW or adjacent grounds shall be removed by CONTRACTOR and be transported to a location considered suitable by the authorities having jurisdiction, for satisfactory disposal. For stones, gravel or other hard material which may be buried in the trench the provisions of the specifications shall apply with the understanding that the use of the land by the land-owner and/or tenant will not be interfered with.

14.4 **Temporary Structures**

All auxiliary structures such as bridges, culverts, sheet piling, posts, signs, etc., which were erected or installed by CONTRACTOR as temporary measure, shall be removed. However, it may be necessary to remove the fence of ROW during the maintenance period.

14.5 **Repair of Damage**

Damages to roads, bridges, private property shall be repaired by CONTRACTOR. All fences and other structures which are damaged during construction shall be restored to original condition.

Slopes, water course sides or banks which have been partially or totally demolished during the execution of the works shall be properly consolidated and restored without waiting for their natural consolidation and settling.

All boundary stones which have been moved or removed during the work must be reset in their original location to the satisfaction of the landowner concerned.

14.6 On completion of clean-up, the ROW shall be restored to such stable and usable condition as may be reasonably consistent with the condition of the ROW prior to laying the pipeline. The COMPANY shall be completely indemnified and held harmless by CONTRACTOR from any and against all claims, demands, losses, expenses etc. that may arise in this behalf or the COMPANY may anyway suffer or sustain, relative to, arising out of, or in connection with same. The COMPANY may require from the CONTRACTOR signed Releases from land owners regarding satisfactory indemnification and restoration of their lands.

14.7 Special precautions shall be taken near slopes prone to erosions and land slides. All necessary steps shall be taken to ensure the rapid growth of grass by providing wicker barriers and by regulating the drainage of surface waters.

14.8 All cadastral or geodetic markers which may have been removed during the execution of the works shall be restored in their exact position.

14.9 Ditches for which no instructions for restoration have been issued, or restoration cannot be done according to existing banks because of the absence of it, shall be restored as instructed by COMPANY. The bed of ditches crossed by the pipeline, shall be cleaned over the full width or the ROW, also outside the ROW if necessary. This restoration might involve the supply and installation proper materials for backfill and protection, sodding or other precautions to prevent erosion or guarantee the stability. Work has to be done after deliberation and acceptance of the authorities and COMPANY. Other field drains have to be restored by hand and/or special equipment to be used for that purpose as soon as possible and if necessary, also outside the ROW.

14.10 Any subsidence, cave-ins, wash-outs, which have been caused during the pipeline construction and maintenance, caused by whatever reason within the edge of ditches and open drains, shall be repaired by CONTRACTOR immediately or at first notice given by COMPANY.

14.11 After the clean-up, the ROW of pastures has to remain fenced and to be removed during the maintenance period. When agricultural and other traffic (requested by tenant) have to cross the ROW the cross-overs have to be fenced with the same material as the ROW. If necessary, special materials have to be used to allow traffic on the cross-over. Fencing of the right-of-way as specified shall not be removed until CONTRACTOR has obtained written permission by COMPANY. In general this has to be done during the maintenance period.

14.12 All openings in or damage to the fence or enclosures shall be repaired by installing new fencing of quality which shall be at least equal to the parts damaged or removed. Provisional gates shall be removed and replaced with new fencing. All repairs to fences and enclosures shall be carried out to the complete satisfaction of COMPANY, land owner and/or tenant.

14.13 If, in the opinion of COMPANY, the sod in pasture land has been damaged by vehicles and wheel tracks are visible, the ROW shall be tilled with a disc-harrow or rotary cultivator several times. The damaged sod shall be firmly cut up and thoroughly mixed through the top-soil. In general the ROW has also to be ripped. After this procedure no closed-in layers must be found and sufficiently loose top-soil 25 to 30cm thick must be present. The whole procedure has to be approved by COMPANY. Subsequently, the entire ROW which is part of pasture land, shall be prepared for seeding and fertilized according to the instructions of COMPANY.

14.14 In crop fields the tillage shall consist of passing over the land several times with a disc harrow, cultivating with a spading machine, or plow, to a depth of approx. 20 cm. In general the ROW has also to be ripped. After this cultivation process no closed-in layers must be found in the ROW. The equipment used and methods adopted shall require the approval of COMPANY. Ripping, has to be done with rippers with a distance of 50 cm between the ripper blades. The type to be used shall be approved by COMPANY.

14.15 A sapling of any plant/tree uprooted or cut during construction shall be planted along the route as per the direction of the COMPANY and in accordance with the Forest Preservation Act, 1981. The cost of sapling and its plantation shall be to CONTRACTOR's account.

14.16 The ROW and the backfilled trench in particular has to be finished in such a way that after settlement of the soil the fields are at their original level.

If during the maintenance period certain parts of the ROW are lower than the original level, COMPANY can order CONTRACTOR to bring these parts to the original level. If the level of the ROW for clean-up is ordered by COMPANY, risk of above mentioned additional restoration shall not be to CONTRACTOR's account.

In cases where heavy damage has occurred to the structure of the subsoil as a result of special circumstances, COMPANY reserves the right to order CONTRACTOR to carry out special work. Said special work can include:

- spading with dragline (depth 30 - 80 cm);
- spading with dragline (depth 80 - 100 cm);
- fertilizing;
- cover with sand.

If during clean-up operations, soil shortages become apparent outside the trench, CONTRACTOR shall supplement said soil shortage using suitable materials, approved by COMPANY.

If site and/or climatic conditions should render this necessary, COMPANY shall have the right to order CONTRACTOR to suspend certain parts of the WORK related to the clean-up and postpone it to a later date.

14.17 **Soil Surplus**

If on site, as a result of the work and after careful backfilling and compacting, a sub-soil surplus exists, this shall be worked up by grading and compacting below the sub-soil top layer and as a rule this shall be done in the same plot of land. It shall not be permitted to remove the surplus from the plot concerned, unless it concerns rejected soil which has to be removed. Working up surplus soil or removal of rejected soil shall be considered to pertain to the WORK.

To work a soil surplus into the ground CONTRACTOR shall remove an additional strip of top soil beside the trench. Next the upper layer of sub-soil shall also be removed. Both soil types shall be stored separately across a width depending on the size of the soil surplus. The soil surplus shall then be distributed across the trench thus widened, after which it shall be graded and compacted and subsequently the top layer of sub-soil and the top-soil shall be replaced in the correct order, in accordance with the Specifications.

In case COMPANY has given prior permission for mixed excavation of the sub-soil as well as in cases where COMPANY deems mixed excavation permissible, the above provision of separate storage of the upper layer of sub-soil shall not apply to the working up of the soil surplus.

In cases where the soil surplus can be worked up in other plots where soil shortages have arisen due to the WORK, this shall only be done after prior permission by land-owner, land-user and COMPANY.

14.18 **Soil Shortages**

If due to unforeseen circumstances during backfilling and compacting there isn't enough soil to fill the trench properly, or to install the crown height as stipulated, CONTRACTOR shall supply the necessary backfill material.

Soil shortages shall be supplemented and applied before the top-soil is replaced.

The soil to be supplied shall be worked up in those locations and into those layers where a soil shortage has been established. The quality of the supplemented soil shall be equal to that of the shortage.

15.0 MAINTENANCE DURING DEFECTS LIABILITY PERIOD

Defects liability Period (defined as period of liability in the CONTRACT) means the period of 12 months calculated from the date certified in the Completion Certificate.

COMPANY reserves the right to carry out instrumented pigging survey of the completed pipeline.

CONTRACTOR shall be responsible for making good with all possible speed at his expense any defect in or damage to any portion of the Work which may appear or

occur during the Defects liability Period and which arise either:

a) from any defective material (other than supplied by COMPANY), workmanship or design (other than a design made, furnished or specified by COMPANY and for which CONTRACTOR has disclaimed responsibility in writing), or

b) from any act or omission of CONTRACTOR done or omitted during the said period.

If such defect shall appear or damage occur, COMPANY shall forthwith inform CONTRACTOR thereof stating in writing the nature of the defect or damage.

If any such defect or damage be not remedied within a reasonable time, COMPANY may proceed to execute the work at CONTRACTOR's risk and expense, provided that he does so in a reasonable manner. Such defect or damage can be, but is not limited to:

- Clean up of ROW, including water courses
- Sagging or sinking of site level or pipe supports
- Sliding of ditch banks
- Repair of fencing or removal of construction fencing
- Repaving of pavements, repair of pavements, repair of coating, painting
- Realigning markers, signs
- Leak/burst of pipe, leaking flanges, washouts
- Short-circuit in casings
- Construction defects such as dents, ovality, welding offsets/defects, etc. detected during intelligent pigging survey.
- etc.

Company reserves the right to have the required Computerised Potential Logging Test executed during the DEFECTS LIABILITY PERIOD and whenever conditions are more favorable for this job. The work shall at or as soon as practicable after the expiration of the Defects Liability Period be delivered to COMPANY in the conditions required by the CONTRACT, fair wear and tear excepted, to the satisfaction of COMPANY. CONTRACTOR shall finish the work, if any outstanding, at the date of completion as soon as possible after such date and shall execute all such work.

Edition : 1

SPECIFICATION
FOR
WELDING OF ONSHORE GAS PIPELINES

SPECIFICATION NO.: MEC/S/05/21/02

(OIL & GAS SBU)
MECON LIMITED
DELHI 110 092

CONTENTS

SL.NO.	DESCRIPTION
01.0	SCOPE
02.0	APPLICABLE CODES, STANDARDS & SPECIFICATIONS
03.0	MATERIAL SPECIFICATIONS
04.0	WELDING CONSUMABLES
05.0	EQUIPMENT & ACCESSORIES
06.0	WELDING PROCESSES
07.0	BEVEL CLEANING AND BEVEL INSPECTION
08.0	ALIGNMENT AND SPACING
09.0	WEATHER CONDITIONS
10.0	WELDING
11.0	HEAT TREATMENT
12.0	INSPECTION AND TESTING
13.0	REPAIR OF WELDS
14.0	DESTRUCTIVE TESTING OF WELDED JOINT - BUTT WELDS
15.0	ULTRASONIC INSPECTION
16.0	AUTOMATED ULTRASONIC TESTING (AUT)
17.0	RADIOGRAPHY

ANNEXURE-I -	ELECTRODE QUALIFICATION TEST RECORD
ANNEXURE-II -	STRESS RELIEF HEAT TREATMENT PROCEDURE SPECIFICATION
ANNEXURE-III -	FORMAT FOR WELDING PROCEDURE SPECIFICATION (WPS)
ANNEXURE-IV -	FORMAT FOR PROCEDURE QUALIFICATION RECORD (PQR)
ANNEXURE-V -	FORMAT FOR MANUFACTURER'S RECORD FOR WELDER OR WELDING OPERATOR QUALIFICATION TESTS
ANNEXURE-VI -	RADIOGRAPHIC PROCEDURE QUALIFICATION RECORD FOR PIPE WELDING
ANNEXURE-VII -	WELDERS IDENTIFICATION CARD
ANNEXURE-VIII -	TYPE OF SOURCE AND FILMS TO BE USED FOR RADIOGRAPHY

PREPARED BY:	CHECKED BY:	APPROVED BY:	ISSUE DATE :
(Shalini Singh)	(Sunil Kumar)	(A.K. Johri)	Jan. 2009

AMENDMENT STATUS

Sl. No.	Clause / Paragraph / Annexure / Exhibit / Drawing Amended	Page No.	Rev.	Date	By		Verified	
					Name	Sig.	Name	Sig.
1.	General	-	1	06.06.11	Hitesh Manju		Sunil Kumar	

01. SCOPE

This specification stipulates requirements for fabrication of all types of welded joints of carbon steel main pipeline systems covering the pipeline and its facilities, which will include the following:

- All line pipe joints of the longitudinal and circumferential butt welded and socket welded types.
- Branch connections
- Joints in welded/ fabricated piping components.
- Attachments of castings, forgings, flanges and supports to pipes.
- Attachments of smaller connections for vents/ drain pipes and tappings for instrumentation.
- Welded manifold headers and other sub-assemblies.

Note: Any approval accorded to the Contractor shall not absolve him of his responsibilities and guarantees.

02. APPLICABLE CODES, STANDARDS & SPECIFICATIONS

All welding works, equipment for welding, heat treatment, other auxiliary functions and the welding personnel shall meet the requirements of the latest editions of the following codes, standards and specifications as listed below :-

- Code for Gas Transmission and Distribution Piping System (ANSI B31.8).
- Standard for welding of Pipelines and Related Facilities (API 1104).
- Specification for welding Electrodes and Filler Materials (ASME Sec. II C).
- Non Destructive examination (ASME Sec. V).
- Welding and Brazing Qualification, ASME Sec. IX.

03. MATERIAL SPECIFICATIONS

- In general carbon steel is used in this specification. The details of material specifications will be given in a welding Specification Chart attached alongwith other project data sheets.
- The CONTRACTOR will keep a record of test certificates of all the materials for the reference of the welding engineer.

04. WELDING CONSUMABLES

The CONTRACTOR shall provide at his own expenses all the welding consumbles necessary for the execution of the job such as electrodes, oxygen, acetylene etc. and the same shall be approved in advance by the Purchaser/ Consultant.

The welding electrodes/ filler wires supplied by the CONTRACTOR shall conform to the class specified in the welding specification chart. The materials shall be of the make approved by the COMPANY.

The electrode shall be suitable for the welding process recommended and base metal used. Physical properties of the welds produced by an electrode recommended for the welding of a particular base metal shall not be lower than the minimum values specified for the base metal unless otherwise specified in Welding Specification Chart and shall correspond to the physical properties of the class of electrode adopted. The choice of electrode shall be made after conducting the required tests on the electrodes as per relevant standards, and shall be the sole prerogative of the COMPANY.

The CONTRACTOR shall submit batch test certificates from the electrode manufacturers giving details of physical and chemical tests carried out by them for each batch of electrode to be used.

Electrode Qualification test records shall be submitted as per **Annexure-I** with respect to the electrodes tested by the CONTRACTOR and submitted for approval of the COMPANY, f or each batch of electrode.

All electrodes shall be purchased in sealed containers and stored properly to prevent deterioration. The electrodes removed from the containers (except cellulosic coated electrodes) shall be kept in holding ovens at the temperature recommended by the electrode manufacturer. Ovens shall be used for low hydrogen electrodes only. Out-of-the oven time of electrodes, before they are consumed, shall not exceed the limits recommended by the electrode manufacturer. The electrodes shall be handled with care to avoid any damage to the flux covering.

The electrodes used shall be free from rust, oil grease, earth and other foreign matter which affect the quality of welding.

Different grades of electrodes shall be stored separately. Cellulosic electrodes used shall however be used as per specific recommendations of manufacturer.

04.01 Shielding Gas

The composition and purity of shielding gas when required by the welding processes other than shielded metal arc welding, when permitted by the COMPANY, shall have prior approval of the COMPANY. Where appropriate, gases or gas mixture of the following quality shall be used.

a) argon complying with BS 4365

b) carbon dioxide complying with type 1 specified in BS 4105
c) gas mixture that have been proved to be satisfactory as a result of procedure approval tests.

When a gas mixture is used which has specified additions, e.g. 2% O_2, 5% CO_2 the variation of such addition shall not exceed ± 10% of that stated. Moisture content shall correspond to a dew point of - 30°C or lower.

05. EQUIPMENT & ACCESSORIES

5.1 The CONTRACTOR shall have sufficient number of welding and cutting equipment, auxiliaries and accessories of sufficient capacities to meet the target schedule.

5.2 All the equipment for performing the heat treatment including transformers, thermocouples, pyro-meters, automatic temperature recorders with suitable calibration arrangements, etc. shall be provided by the CONTRACTOR, at his own expenses and these shall bear the approval of the COMPANY. Adequate means of measuring current and voltage shall be available.

5.3 Redoing of any work necessitated by faulty equipment or operation used by the CONTRACTOR, will be done at his own expense.

06. WELDING PROCESSES

6.1 Welding of various materials under this specification shall be carried out using following process.

6.1.1 Main line (24" ϕ & above API 5L Gr. X-70, PSL-2)

Welding shall be carried out by automatic or semi automatic welding process.

6.1.2 Main line (24" ϕ & above API 5L Gr. X-80, PSL-2)

Welding shall be carried out by automatic welding process. When welding is carried out only from outside, copper backing shall be used at the root side.

6.2 Tie-Ins and Crossings

Shielded Metal Arc Welding and Semi-automatic Flux Cored Arc Welding shall be used for tie-ins and crossings.

6.3 Any deviation desired by the Contractor shall be obtained through the written consent of the Company.

Following agencies for Automatic Welding Systems are acceptable:

a) CRC-Evans Automatic Welding Systems, Houston
b) Pipe Welding Technology, Italy

c) RMS Welding Systems, Canada
d) Sermier Dasa, France

In case, the bidder proposes to employ any other agency, the proposed agency shall meet the qualification criteria mentioned in the following paragraph and shall submit necessary documentation meeting the criteria. The detailed system description and the procedure shall be submitted to the COMPANY for evaluation and approval

"Automatic welding systems and agencies who have proven track record of high productivity with satisfactory quality of weld and have done a single project of diameter 20" or above for a minimum length of 50 km and for a cumulative length of 500 km or above on large diameter Pipe lines in the last ten years shall only be accepted. CONTRACTOR shall engage only such automatic welding systems and agencies for the work to be covered by main line automatic welding. The track record shall be submitted to the COMPANY for approval prior to engagement".

6.4 The welding specification charts specifically developed for welding of the pipeline under this project shall be followed. The welding procedure adopted and the consumables used shall be specifically approved.

6.5 A combination of different welding processes or a combination of electrodes of different classes/ makes could be employed for a particular joint only after qualifying the welding procedures to be adopted and obtaining the approval of the COMPANY.

07. BEVEL CLEANING AND BEVEL INSPECTION

Line pipe supplied by COMPANY shall have bevel ends as specified in the applicable specification for Line Pipe attached with the Bid Package. Any modification thereto, if required by CONTRACTOR due to his special welding technique shall be carried out by the CONTRACTOR at his own cost.

Before welding, all rust and foreign matter shall be removed from the bevelled ends by power operated tools. This shall be effected inside and outside and for a minimum distance of 25mm from the edge of the weld bevel. The bevels shall be thoroughly inspected at this stage. If any of the ends of the pipe joints are damaged to the extent that, in the opinion of COMPANY, satisfactory weld spacing cannot be obtained and local repair by grinding cannot be successfully done, the damged ends shall be cut and re-bevelled to the satisfaction of the COMPANY, with an approved bevelling machine. Manual cutting and weld repairs of bevels is not allowed. Should laminations, split ends or inherent manufacturing defects in the pipe be discovered, the lengths of pipe containing such defects shall be removed from the line to the satisfaction of COMPANY. On pipes which have been cut back, a zone extending 25mm back from the new field bevel, shall be ultrasonically tested to the requirement of the line pipe specification to ensure freedom from laminations. The new bevel shall be subjected to 100% visual and 100% dye penetrant/ MPI tests. A report shall be written for all testing and records kept.

08. ALIGNMENT AND SPACING

Immediately prior to line-up CONTRACTOR shall inspect the pipe ends inside and outside for damage, dents, laminations etc. Pipe for welding shall be set up, correctly spaced, allowing for temperature changes during welding, in correct alignment and shall in no circumstances be sprung into position. Temporary attachments of any kind shall not be welded to the pipe. Welds joining the sections of the pipelines, valve installation or similar welds classified as tie-in welds shall be made in the trench. Otherwise the alignment and welding shall be made alongside the ditch with the pipe supported on skids and back pad or other suitable means approved by COMPANY, at least 500mm above the ground, unless approved by the COMPANY in specific cases.

Seam orientation of welded pipe shall be selected to ensure that at the circumferential welds, the longitudinal welds shall be staggered in the top 90° of the pipeline, or 250mm whichever is the lesser. A longitudinal joint shall pass an appurtenance of a structural element at a minimum distance of 50mm. Should a section of the line containing uncompleted welds fall from the skids, the CONTRACTOR shall immediately inform COMPANY.

Every effort shall be made to reduce misalignment by the use of the clamp and rotation of the pipes to obtain the best fit. For pipe of same nominal wall thickness off-set shall not exceed 1.6mm. The off set may be checked from outside using dial gauges. Any branch connection, sleeve, etc. shall be atleast 150mm from any other weld. The welds for fittings shall be so located that the toe of the weld shall not come within 50 mm of any other weld. Cold dressing is permissible only in cases of slight misalignment and may only be carried out with a bronze headed hammer. Hot dressing shall not be permitted. When welding pipes of different wall thickness (as directed by COMPANY) a special transition piece shall be used. This shall have a minimum of 1:4 taper. The welds shall be subject to both ultrasonic and radiographic inspection.

The root gap shall be accurately checked and shall conform to the qualified welding procedure. The use of internal line-up clamps is mandatory for pipe diameters 10" and above. However, in some cases (tie-in welds, flanges, fittings, diameter of pipe 10" etc.) where it is impossible to use internal clamps, an external line-up clamp may be used.

The internal line-up clamp shall not be released before the entire root pass has been completed.

When as external line-up clamp is used, all spaces between bars or atleast 60% of the first pass shall be welded before the clamp is released and the pipe remaining adequately supported on each side of the joint.

Segments thus welded shall be equally spaced around the circumference of the pipe. Slag, etc. shall be cleaned off and the ends of the segments shall be prepared by grinding, so as to ensure continuity of the weld bead.

09.0 WEATHER CONDITIONS

The parts being welded and the welding personnel shall be adequately protected from rain and strong winds. In the absence of such a protection no welding shall be carried out. The completed welds shall be suitably protected in case of bad weather conditions.

10.0 WELDING

10.1 Root Pass

a) Root pass shall be made with electrodes/ filler wires recommended in the welding specification chart attached along with other project data sheets. The size of the electrodes used shall be as per the approved welding procedure.

b) Position or roll welding (for yard double jointing) may be permitted. Separate procedures shall be submitted and qualified for up hill, down hill, vertical down and roll welding. The vertical up method of welding shall be used for the root pass of the tie-ins, special crossings, fittings and special parts, filled welds, repairs and when an external line up clamp is used. The down hill welding may be used for root run welding of tie-ins and special crossings when (a) the edges are machined or have equivalent preparation (b) line up clamps are used and the fit up is geometrically and mechanically similar to one of the oridinary line welding without misalignment or uneveness.

c) The root pass of butt joints shall be executed properly so as to achieve full penetration with complete fusion of the root edges. Weld projection inside the pipe shall not exceed 1.6 mm wherever not specified by the applicable code.

d) Any deviation desired from the recommended welding technique and electrodes indicated in the welding specification chart shall be adopted only after obtaining express approval of the COMPANY.

e) Welding shall be continuous and uninterrupted during a pass.

f) On completion of each run, craters, welding irreigularities, slag, etc., shall be removed by grinding and chiselling.

g) While the welding is in progress care shall be taken to avoid any kind of movement of the components, shocks, vibration and stresses to prevent occurance of weld cracks.

h) Fillet welds shall be made by shielded metal arc welding process irrespective of the thickness and class of piping. Electrode size shall not exceed 3.25mm diameter for socket joints. Atleast two passes shall be made on socket weld joints

i) Root pass of fillet weld for branch connection can also be made by GTAW process. However other pass shall be made by SMAW process as mentioned above (point h).

j) Peening shall not be used.

10.2 **Joint Completion**

The first pass shall be carried out by a minimum of two welders, working simultaneously and so placed as to cause minimum distortion of the pipe.

The number of welders and the allowable welding sequences shall be as those laid down in the qualified welding procedure specification. Once the deposit of the first pass has been started, it must be completed as rapidly as possible, reducing interruptions to the minimum. The welding and wire speed shall be approximately same as that established in the Qualified Welding Procedure Specification (QWPS).

The pipe shall always be adequately supported and must not be pumped or shaken during welding. The clamp shall be removed, as indicated in clause 8.0 above. Before starting the second pass, the first pass shall be cleaned and flattened with rotating grinders.

The interruption between completion of the first pass and starting the second pass shall be as stated in the procedure specification.

For crack prevention a top and bottom reinforcement of at least one electrode shall be applied before lowering the pipe on the skid.

The welding speed selected shall enable production of a bead which is sufficiently thick and which shows no undercutting.

The time lapse between second and third pass shall be as stated in the procedure specification, normally not exceeding five minutes. After completion of the third or following passes, welding operations may be suspended, so allowing the joint to cool down, provided that the thickness of the weld metal deposited is equal to at least 50% of the pipe thickness. Upon restarting, depending on the materials, wall thickness and welding process, a preheating to atleast 100°C shall be carried out. Subsequent passes up to weld completion shall be protected to avoid rapid cooling, if meteorological conditions so dictate. Cleaning between passes shall be done carefully so as to reduce the possibility of inclusions.

Electrodes starting and finishing points shall be staggered from pass to pass. Arc-strikes outside the bevel on the pipe surface are not permitted. Arc - strike or arc-burn on the pipe surface outside the weld, which are caused accidentally by electrical arcs between the electrodes, electrode holder, welding cable shall be removed by grinding in accordance with a procedure approved by COMPANY and the repair checked by ultrasonic, radiographic, magnetic particle or dyepenetrant tests which the COMPANY feels necessary. The pipe wall thickness after grinding shall not be less that the minimum thickness limit permitted for the pipe. Repair of arc-strikes by welding is prohibited.

The completed weld shall be carefully brushed and cleaned and shall appear free from spatters, scales, etc.

These requirements apply not only to completed welds but also to the bare strip at least so wide so as to allow full skid examination at both ends of the pipe to allow a good ultrasonic inspection when it is required.

11.0 HEAT TREATMENT

11.1 Preheating

Preheating, if required, shall be carried out as per the following :

a) Preheating requirements for the various materials shall be as per the welding specification chart.

b) Preheating shall be performed using resistance or induction/ heating methods. Preheating by LPG flame with ring burner may be used with the permission of the COMPANY under careful supervision.

c) Preheating shall extend uniformly to atleast three times the thickness of the joint, but not less than 50mm, on both sides of the weld.

d) Preheating temperature shall be maintained over the whole length of the joint during welding. Temperature indicating crayons or other temperature indicating devices shall be provided by the CONTRACTOR to check the temperature.

11.2 Postweld Heat Treatment

a) Post weld heat treatment, wherever required for joints between pipes and fittings, pipe body and supports shall be carried out by the CONTRACTOR at his expense as per the relevant specifications, applicable standards and the instructions of the COMPANY.

b) The heat treatment of welded joints shall be carried out as per the requirements laid down in ANSI B31.8 and other special requirements mentioned in welding specification chart.

c) The CONTRACTOR shall submit for the approval of the COMPANY, well before carrying out actual heat treatments the details of the post weld heat treatment procedure, as per **Annexure-II** attached, that he proposes to adopt for each of the materials/ assembly/ part involved.

d) Post weld heat treatment shall be done in a furnace or by using an electric resistance or induction heating equipment, as decided by the COMPANY.

e) While carrying out local post weld heat treatment, technique of application of heat must ensure uniform temperature attainment at all points of the portion being heat treated. Care shall be taken to ensure that width of heated band over which specified post weld heat treatment temperature is attained is atleat as that specified in the relevant applicable standards/ codes.

The width of the heated band centered on the weld shall at least be equal to the width of weld plus 2" (50mm). The temperature gradient shall be such that the length of the material on each side of the weld, at a temperature exceeding half the heat treatment temperature, is atleast 2.5 rt where is the bore radius and t is the pipe thickness at the weld.

f) Throughout the cycle of heat treatment, the portion outside the heat band shall be suitably wrapped with insulation so as to avoid any harmful temperature gradient on the exposed surface of pipe. For this purpose temperature at the exposed surface of the pipe shall not be allowed to exceed 400°C.

g) The temperature attained by the portion under heat treatment shall be recorded by means of thermocouple pyrometers. Adequate number of thermocouples shall be attached to the pipe directly at equally spaced locations along the periphery of the pipe joint. The minimum number of thermocouples attached per joint shall be 2 upto 10" dia and 3 for 12" dia and above. However, the COMPANY can increase the required minimum number of thermocouples to be attached, if found necessary.

h) Automatic temperature recorders which have been suitably calibrated shall be employed. The calibration chart of each recorder shall be submitted to the COMPANY prior to starting the heat treatment operation and its approval shall be obtained.

i) Immediately on completion of the heat treatment, the post weld heat treatment charts/ records alongwith the hardness test results on the weld joints (whenever required as per the welding specification chart) shall be submitted to COMPANY for its approval.

j) Each joint shall bear an identification number which shall be maintained in the piping sketch to be prepared by the CONTRACTOR. The joint identification number shall appear on the corresponding post weld heat treatment treatment charts. The same identification numbers shall also be followed for identification on corresponding radiographic films. The chart containing the identification number and piping sketch shall be submitted to the COMPANY in suitable folders.

k) Vickers hardness/ Brinnel hardness of the heat affected zone as well as of the weld metal, after heat treatment shall be measured using a suitable hardness tester and shall not exceed the maximum hardness specified in the welding specification chart. The weld joint shall be subjected to reheat treatment, when

hardness measured exceeds the specified limit, at the CONTRACTOR's own expense.

l) The CONTRACTOR shall arrange for the hardness testing and shall maintain the records of all the joints tested. These records shall be checked by the COMPANY.

12.0 INSPECTION AND TESTING

12.1 General

a) The COMPANY's Inspector shall have free access to all concerned areas, where the actual work is being performed. The CONTRACTOR shall be also provide the COMPANY's inspector all means and facilities necessary to carry out inspection.

b) The COMPANY is entitled to depute its own inspector to the shop or field where pre-fabrication and erection of pipelines are being done, with (but not limited to) the following objectives :-

i. To check the conformance to relevant standards/ specifications and suitability of various welding equipment and the welding performance.

ii. To supervise the welding procedures qualification.

iii. To supervise the welder's performance qualification.

iv. To carry out visual/NDT examination of the weldings.

v. To check whether shop/ field welding is being executed is in conformity with the relevant specification and codes of practice followed in pipe construction.

c) CONTRACTOR shall intimate sufficiently in advance the commencement of qualification tests, welding works and acceptance tests, to enable the Company's inspector to be present to supervise the same.

12.2 Welding Procedure Qualification

a) Welding procedure qualification shall be carried out in accordance with the relevant requirements of API 1104 latest edition or other applicable codes and other special requirements of the specification / job requirements by the CONTRACTOR at his expense. The CONTRACTOR shall submit the welding procedure specification chart format as per **Annexure-III** (attached) immediately after the receipt of the order.

b) COMPANY's inspector will review, check and approve the welding procedure submitted and shall release the procedure for procedure qualification tests. The procedure qualification test shall be carried out by the CONTRACTOR under field conditions at his own expense. A complete set of test results in format as per **Annexure-III & Annexure-IV** (attached) shall be submitted to the

COMPANY's Inspector for approval immediately after completing the procedure qualification test and atleast 2 weeks before the commencement of actual work. Standard tests as specified in the code shall be carried out in all cases. In addition to these, tests, other tests like radiography, macro/ micro examination, hardness tests, dye penetrant examination, charphy V-notch etc. shall be carried out on specimens. It shall be the responsibility of the CONTRACTOR to carry out all the tests required to the satisfaction of the COMPANY's Inspector. The destructive testing of welded joints shall be as per Clause 14.0.

12.3 **Welder's Qualification**

a) Welders shall be qualifed in accordance with the API 1104 and other applicable specifications by the CONTRACTOR at his expense. The butt weld test pieces of the qualification test shall meet the radiographic test requirements specified in Clause 12.5 and 16.0 of this specification. The COMPANY's Inspector shall witness the test and certify the qualification of each welder separately. Only those welders who have been approved by the COMPANY's Inspector shall be employed for welding. CONTRACTOR shall submit the welder qualification test reports in the standard format as shown in **Annexure-V** and obtain express approval, before commencement of the work. It shall be the responsibility of CONTRACTOR to carry out qualification tests of welders and obtain written approval, before commencement of works.

b) The welders shall always have in their possession the identification card as shown in **Annexure-VII** and shall produce it on demand by the COMPANY's Inspector. It shall be the responsibility of the CONTRACTOR to issue the identity cards after it has been duly certified by the COMPANY.

c) No welder shall be permitted to work without the possession of identity cards.

d) If a welder is found to perform a type of welding or in a position for which he is not qualified, he shall be debarred from doing any further work. All welds performed by an unqualfiied welder shall be cut and redone by a qualified welder at the expense of the CONTRACTOR.

12.4 **Visual Inspection**

Inspection of all welds shall be carried out by COMPANY as per the latest editions of the applicable codes and specifications. All finished welds shall be visually inspected for parallel and axial alignment of the work, excessive reinforcement, concavity of welds, shrinkage, cracks, under-cuts, dimensions of the weld, surface porosity and other surface defects. Undercutting adjacent to the completed weld shall not exceed the limits specified in the applicable standard/ code.

12.5 **Non Destructive Examination**

12.5.1 The non destructive examination of one hundred percent (100%) girth welds will be required by the COMPANY.

The non-destructive examination shall mainly consist of examination using Automated

Ultrasonic Testing (AUT) as detailed in clause no. 16.0. This shall be applicable for all welds made by automatic GMAW process with narrow gap edge preparation and welds made by semi-automatic FCAW process.

The CONTRACTOR shall make all the arrangements for the AUT of work covered by the specification at his expense. The CONTRACTOR shall furnish all the reports to the COMPANY, immediately after examination together with the corresponding interpretation reports on the approved format. The details of the AUT reports along with the joint identification number shall be duly entered in a register and signed by the CONTRACTOR and submitted to the COMPANY for approval. The COMPANY will review all the AUT records of welds and inform the CONTRACTOR to those welds, which are unacceptable. The decision of the COMPANY shall be final and binding in this regard.

For 150# Rating Pipeline, welds shall meet the standards of acceptability as set forth in API 1104. However for higher class rating pipeline welds shall meet the standards of acceptability as set forth in API 1104 and as well as the requirements laid in subsequent paragraphs.

The CONTRACTOR shall make all the arrangements for the NDT work covered by the specification at his expense.

All requirements mentioned in the specification shall be arranged and executed by the CONTRACTOR through his own resources. In addition, Radiography examination shall be required in the following cases as per clause no. 17.0 of this specification :

a) On the first 100 welded joints corresponding to each automatic GMAW welding procedure used.

b) When welds are repaired.

c) When in the opinion of COMPANY, radiography inspection is required to confirm or clarify defects indicated by Ultrasonic examination.

d) Welding of Transition piece of pipe.

In addition, Radiography inspection may be required for certain critical welds of the pipeline, i.e. tie-ins, welding of valves, flanges, randomly selected at COMPANY discretion. All fillet and groove welds, other than those AUT examined, shall be subjected to Dye-Penetrant /MP testing followed by manual Ultrasonic testing.

The non-destructive testing system used for inspecting welds must be approved by the COMPANY.

All other welds and Tie-in joints having API bevel shall be examined by Radiography. When Radiography is used, the provisions stated in this para shall be applicable.

- For all production welds, X-ray Radiography by internal crawlers be used.

Welds shall meet the standards of acceptability as set forth in API 1104 and as well as the requirements laid in subsequent paragraphs.

The CONTRACTOR shall make all the arrangements for the Radiography examination of work covered by the specification at his expense.

The COMPANY will review all the radiographs of welds and inform the CONTRACTOR regarding unacceptable welds. The decision of the COMPANY shall be final and binding in this regard.

All the requirements mentioned in the specification shall be arranged and executed by the CONTRACTOR through his own resources. In addition, Ultrasonic inspection is required in the following cases as per clause no. 15.0 of this specification:

a) On the first 10 welded joints corresponding to each automatic GMAW welding procedures used.
b) When welds are repaired.
c) When in the opinion of COMPANY, Ultrasonic inspection is required to confirm or clarify defects indicated by Radiography.

In addition, Ultrasonic inspection may be required for certain critical welds of the pipeline, i.e. tie-ins, welding of valves, flanges, randomly selected at COMPANY discretion. All fillet and groove welds, other than those are subjected to Radiography, shall be subjected to Dye-Penetrant/MP inspection. The non-destructive testing system used for inspecting welds must by approved by the COMPANY.

Acceptance Criteria

Weld quality is judged on the basis of the acceptability criteria mentioned below:

Any weld which as a result of radiographic and/ or ultrasonic examination in the opinion of COMPANY exhibits imperfections greater than the limits stated in API-1104 latest edition or as superseded in this specification shall be considered defective and shall so be marked with an identification point marker.

In addition to the API-1104 requirements, the welds containing cracks including crater cracks regardless of size of location are unacceptable.

1. Any length of inadequate penetration of the root bead as defined by API-1104 is not acceptable except that root concavity is allowed as per API 1104.
2. Any amount of incomplete fusion at the root of the joint as detailed in API 1104 is considered unacceptable.
3. Unrepaired burn through areas are unacceptable.

Suitable records shall be maintained by the CONTRACTOR as desired by the COMPANY on the day to day work done on welding, radiography, ultrasonic testing. The CONTRACTOR shall present the records to the COMPANY on day to day basis and whenever demanded, for approval.

12.6 **Destructive Testing**

The COMPANY has the authority to order the cutting of upto 0.1% of the total number of welds completed for destructive testing at no extra cost of COMPANY. The destructive testing of weld joints shall be made as per Clause 14.0.

In addition, welds already cut out for defects for any reason may also be subjected to destructive testing. The sampling and the re-execution of welds shall be carried out by the CONTRACTOR at his own expense. If the results are unsatisfactory, welding operations shall be suspended and may not be restarted until the causes have been identified and the CONTRACTOR has adopted measures which guarantee acceptable results. If it is necessary in the COMPANY's opinion the procedure shall be re-qualified. The weld joint represented by unsatisfactory welds shall stand rejected unless investigation prove otherwise.

13.0 REPAIR OF WELDS

13.1 With the prior permission of COMPANY, welds which do not comply with the standards of acceptability shall be repaired or the joint cut out and re-welded.

A separate welding procedure specification sheet shall be formulated and qualified by CONTRACTOR for repair welds simulating the proposed repair to be carried out. Separate procedures are required to be qualified for (a) thorough thickness repair (b) external repair and (c) internal repair. Welders shall be qualified in advance for repairs. The root pass, for repairs opening the root, shall be done by the vertical uphill technique. The procedure shall be proven by satisfactory procedure tests to API 1104 including the special requirement of the specification, and shall also be subject to metalographic examination, hardness surveys and Charpy tests to determine the effects of repair welding on the associated structure.

Root sealing or single pass repair deposit shall not be allowed. Internal root defects shall be ground thoroughly and welded with a minimum of two passes. However, while grinding for repairs, care shall be taken to ensure that no grinding marks are made on the pipe surface anywhere.

The repair shall be subjected, as a minimum requirement to the same testing and inspection requirements as the original weld. The re-radiography of repaired weld shall be limited to 6” weld length on either edge of the repaired area. A 100% ultrasonic test shall be done at the repaired area externally. Any repaired area that is wide, irregular or rough shall be rejected and a full cut out shall be done. Single pass repairs shall be subjected to 100%, Dye-Penetrant / MP testing.

Repairs are limited to a maximum of 30% of the weld length. Not more than two repairs are permitted on the same location. All repairs shall be carried out the day after initial Radiography or earlier. A report of all repairs shall be maintained by CONTRACTOR and submitted every day to the Company / Consultant.

13.2 **Weld Rejected by Accumulation of Defects**

Where a weld is rejected by the accumulation of defect clause, as defined by API 1104 and this specification, repairs within these limitations are permitted. Defects in the filling and capping passes shall be repaired preferentially.

14. DESTRUCTIVE TESTING OF WELDED JOINT - BUTT WELDS

14.1 Preparation

Having passed the visual and the non-destructive-inspection the test weld shall be subject to mechanical test.

After satisfactory completion of all visual and non-destructive testing the test weld shall be set aside for a period not less than 24hours. No further work on the test weld and no cutting of test specimens from the weld shall be performed until a period of at least 24 hours has expired. Having passed the visual and the nondestructive inspection, the test weld shall be subjected to mechanical test.

Weld specimens shall be taken from the positions indicated in Fig. 1 of this specification from areas as free from defects as possible; for this reason it is necessary to take the previous non-destructive tests into account. The minimum number of tests to be carried out is given in Table-1 of this specification.

The tests shall be carried out in laboratories approved by the COMPANY. The specimens shall be prepared in accordance with the figures given in the paragraphs which refer to the individual tests.

14.2 Tensile Strength

Specimens shall be taken from the position indicated in Fig. 1 & 1A of this specification. Two ISO type specimens and two API - type specimens shall be taken.

The ISO test specimen are shown in Fig. 2 of this specification.

14.2.1 Method

The test shall be carried out in accordance with ISO:375.

Table-1

Type and Number of Test Specimens for Procedure Qualification Test & Production Welds

Pipe Size, Out Side Diamter-	Number of Specimens									
	Tensile	Tensile	Nick	Root	Face	Side	Macro	Hard-	Impact	Total

Inches	API	ISO	Break	Bend	Bend	Bend	Bend	ness		
Wall Thickness - ½ inch (12.7mm) and Under										
Under 2-3/8	0	0	2	2	0	0	0	0	0	4
2-3/8 to 4-½ incl.	0	0	2	2	0	0	0	0	0	4
Over 4-½ less than 12.75	2	0	2	2	2	0	2	2	12	24
12- 3/4 and over	2	2	4	4	4	0	2	2	24	44
Wall Thickness - Over ½ inch (12.7mm)										
4-½ and smaller	0	2	0	0	0	2	0	0	0	4
Over 4-½ less than 12-3/4	2	0	2	2	2	0	2	2	12	24
12-3/4 and over	2	2	4	0	0	8	2	2	24	44

14.3 Nick-Break Test

14.3.1 Preparation

Specimens for Nick-break test with notches thus worked can break in the base metal, instead of in the fusion zone; therefore an alternative test piece may be used after authorisation by the COMPANY with a notch cut in the reinforcement of outside weld bead to a maximum depth of 1.5mm measured from the surface of the weld bead.

14.4 Macroscopic Inspection

14.4.1 Preparation

Specimens shall be taken from the positions indicated in Fig. 1 of this specification and shall be prepared in accordance with ASTM E2 and E3.

The width of the macrosection has to be at least three times the width of the weld. The section is to be prepared by grinding and polishing and etched to clearly reveal the weld metal and heat affected zone.

14.4.2 Method

Specimens shall be carefully examined under the microscope, with a magnification of atleast 25 times (25:1). The COMPANY may ask for a macrograph with 5 times (5:1) magnification for DOCUMENTATION purposes.

14.4.3 **Requirements**

Under macroscopic examination, the welded joints shall show good penetration and fusion, without any defect exceeding the limits stated in the evaluation criteria of the nick break test.

14.5 **Hardness Test**

14.5.1 **Preparation**

The prepared macrosection is to be used for hardness testing using the Vickers method with 10 kg load Indentations are to be made along traverses each approximately 1mm below the surface on both sides of the weld.
In the weld metal a minimum of 6 indentations equally spaced along the traverses are to be made. The HAZ indentations are to be made along the traverses for approximately 0.5mm each into unaffected materials, and starting as close to the fusion line as possible.

One indentation on each side of the weld along each traverse is to be made on parent metal. Refer Fig.3. The indentations are to be made in the adjacent regions as well on the opposite sides of the macrosection along the specified traverses.

14.5.2 **Method**

The test shall be carried out in accordance with Recommendation ISO R81, Vickers hardness, using a laboratory type machine controlled as pre-recommendation ISO R146 and using a diamond pyramid penetrator set at 2.37 rad (136°) with a load of 10 kg.

14.5.3 **Requirements**

Hardness value shall not exceed the limit specified in welding Specification chart. In case of a single reading having a slightly (+10 HV) higher value than the specified limit, further indentations shall be made to check if the high value was an isolated case.

All the hardness values contained from the heat affected zone shall not exceed 100 HV with respect to the average hardness of the values obtained for the base metal. If these additional tests give a hardness within the specification limit the slightly higher value may be accepted.

14.6 **Charpy - V - Notch Impact Test**

14.6.1 Specimens shall be taken from the position indicated in Fig. 1 of this specification. The test specimens will be prepared in accordance with ISO R148. Charpy V-notch specimens shall have dimensions as given in Fig. 3 of this specification.

Three test specimens shall be taken from each sample and they shall be cut and worked so that their length is transverse and perpendicular to the weld bead with the notch

position as shown in Fig. 4 of this specification. The notch shall be perpendicular to the roller surface. The test specimen width shall depend upon the pipe wall nominal thickness as following :

Sl. No.	Nominal Wall Thickness in mm	Test Specimen width mm
1.	Over 12	10
2.	Over 9.5 and upto 12	7.5
3.	From 7 upto 9.5	5
4.	Less than 7	2.5

14.6.2 **Test Method**

The test shall be carried out as indicated in ISO R148 "Beam impact test V-notch".

Test pieces shall be immersed in a thermostatic bath and maintained at the test temperature for at least 15 minutes. They shall then be placed in the testing machine and broken within 5 seconds of their removal from the bath. The test temperature shall be as mentioned in Special conditions of the Contract.

14.6.3 **Requirements (Note-1)**

The impact energy shall be as follows :

Sl. No.	Test Specimen in mm	"Average of three Specimens (Note-2) Joules (Min.)	Minimum Single Value (Note-1) Joules
1.	10.0	27.0	22.0
2.	7.5	21.5	17.0
3.	5.0	18.5	15.0
4.	2.5	10.0	8.0

Note :

1) Only one value is permitted to be lower than average value upto the value specified.
2) These values are specified for resistance to brittle fracture only, where additional requirements are specified in project data sheet. (Ex. pipeline materials with arrest properties i.e. a higher upper shelf charpy V-energy for resistance against propagating ductile fractures) the same shall be followed.

14.7 **Bend Test Requirements**

The Bend test Specimens shall be made and tested as per the requirements of API 1104 Sixteenth Edition May 1983 except that the dimensions of the Jig for guided bend test

Fig. 5 para 2.6 API 1104 shall be modified as follows:

Radius of the Plunger `A'	:	2 t
Radius of the die `B'	:	3 t + 1.6mm
Width of the die `C'	:	50.8mm

The acceptance criterion on shall however be as per para 2.643 and 2.653 of API 1104 nineteenth edition Sept. 1999.

Note : t = thickness of specimen

15. ULTRASONIC INSPECTION

In addition to the radiographic inspection, ultrasonic inspection is required as per conditions listed in paragraph 12.5 of this specification. This section concerns manual ultrasonic inspection. However ultrasonic by automatic equipment may be used if approved by the COMPANY.

15.1 Equipment and Operators

The CONTRACTOR who carries out the ultrasonic inspection shall have sufficient qualified personnel equipment and instruments at his disposal to be able to effect the tests without hindering or delaying the pipeline assembly operations.

The operators shall be fully qualified as per a recognised standard (ASME Sec. V or equivalent) and they shall have as minimum level II as described in para 11.4.3, API 1104; nineteenth edition. The operators shall be able to :

- calibrate the equipment ;
- perform an operational test under production conditions;
- interpret the screen picture ;
- evaluate the size and location of reflectors
- interpret the type of defects detected

The COMPANY has the option of checking the ability of personnel employed for ultrasonic testing by means of qualification tests.

The CONTRACTOR appointed to carry out ultrasonic inspection shall supply all the instruments necessary for their execution on site.

15.2 Specification for Ultrasonic Inspection Procedure Qualification

Before work begins, the CONTRACTOR shall present a specification describing the proposed U.T. procedure qualification.

This specification shall state, as an indication only but not limited to the following

information :

- type of U.T. equipment used
- type and dimensions of transducers
- frequency range
- details for calibration
- coupling medium
- inspection technique
- record details
- reference to the welding procedure where it is intended to adopt the specification.
- temperature range of the joints to be inspected.

15.3 **Qualification of Ultrasonic Inspection Procedure**

The ultrasonic inspection procedure shall be approved by the COMPANY. Before inspection begins, the COMPANY may require the qualification test of the ultrasonic inspection procedure. This specification test consists in testing (under normal operating conditions) some CONTRACTOR welds made according to the same production procedure, where there are typical defects the test intends to detect.

This test shall be conducted in the presence of the COMPANY. The Ultrasonic inspection procedure shall be approved by the Company.

15.4 **Test Procedure**

Circumferential welds shall be inspected from both sides using angled probes.

The surface with which the probes comes into contact shall be free of metal spatter, dirt, iron oxide, and scales of any type; therefore it shall be necessary to clean a strip at least 50mmwide on both sides of the weld with steel wire brushes and anyhow the cleaned strip must be atleast wide enough to allow full skip examination.

If, during the test, echoes of doubtful origin appear, it shall be necessary to inspect a convenient area on the pipe surface, close to the weld, with a straight beam transducer in order to check whether any manufacturing defects are present which could have interfered with the ultrasonic beam.

By way of an example, the equipment shall include but not be limited to the following:-

- ultrasonic equipment and coupling medium
- sample sections for calibration of instruments
- equipment for cleaning of surface to be examined
- rules calibrated in centimeters for exact location of the position of defects.

The characteristics of the above - listed instruments and equipment shall guarantee:

a) that the required standards of the inspection procedure, as previously

established and approved by the COMPANY, are satisfied.

b) continuous operation

All the instruments and equipment shall be approved by the COMPANY before being used. The COMPANY has the authority to reject any item which is considered unsuitable. The decision of the COMPANY is final. The CONTRACTOR appointed to carry out ultrasonic inspections shall also ensure the operational efficiency and maintenance of the instruments and equipment, and shall immediately substitute any item rejected by the COMPANY.

All the instruments and equipment necessary for carrying out ultrasonic inspection on site shall satisfy the requirements laid down by the public boards of institutions which regulate `safety at work'.

15.5 Ultrasonic Instruments

The Ultrasonic Instruments shall satisfy the following:

- be pulse-echo type, able to generate, receive and display, on the screen a cathode ray tube (CRT) pulse at frequencies between 1 and 6 MHz. The useful part of the CRT screen shall be at least 70mm wide and at least 50mm high.
- shall have variable amplification, with steps of 1 or 2 dB over a range of a least 60 dB.
- the regulation control shall be accurate to within ±1 db and this accuracy shall be certified by the instrument manufacturer.
- may be powered by a battery or an electric generator. In the first case, the autonomy of operation (endurance) of the instrument shall be sufficient to carry on working without frequent interruptions, and the instruments shall be equipped with an automatic switch which switches it off when the battery runs down; in the second case, there must be a voltage stabilising device with a tolerance of ±2 Volts.

15.6 Probes

The probes used shall have dimensions, frequencies, and a refraction angle suited to the type of steel, the diameter, the thickness of the pipe and to the joint design.

15.7 Reference Sample Pieces

The efficiency of the equipment used, the effective refraction angle of the probe, and the beam output point, shall be checked using a V_1 and V_2 sample block, IIW type or calibration block ASTM E-428.

For manual Ultrasonic testing and automated Ultrasonic testing, the reference sample pieces shall be as described in API 1104, Nineteenth Edition, para 11.4.5.

15.8 Calibration

The calibration, qualification of the testing procedure shall be done as provided in API 1104.

15.9 Regulation of Amplification During Production Testing

Scanning sensitivity shall be as provided in API 1104 para 11.4.7.2 &11.4.7.3.

15.10 Qualification of Ultrasonic Testing Operators

Before the inspection begins or during the same inspection, the COMPANY may require a qualification test for the ultrasonic equipment operators.

15.11 Evaluation of Indications Given by Ultrasonic Tests

Each time that echoes from the weld bead appear during production testing, the instrument amplification shall be altered to coincide with the reference amplification and the probe shall be oved until maximum response is obtained, paying attention all the time of the probe-tube coupling.

If, under these conditions, the heights of the defect echo is equal to or greater than that of the reference echo, the defect shall be evaluated according to other clauses of this Specification. If the defect has also been detected by the radiographic and or visual examination, the dimensions shall be judged according to the type of examination which detects the greater defect. Returns which are less that 50% of the reference echo, will not be considered. If returns are above 50% but lower than 100% of the reference echo, and if the operator has good reasons to suspect that the returns are caused by unfavourably oriented cracks, the same shall be informed to the COMPANY. Moreover, when there is a defect to be repaired, such defect shall be removed for a length corresponding to the one where no more return echo is given.

15.12 Other Equipment

The use of rules calibrated in centimeters, attached if possible to the probe, for the precise location of the position of welding defects, is recommended. Defect location is effected by measuring the projection distance between the probe output and the reflecting surface.

The operators carrying out the tests shall have besides the probing instrument, tools for cleaning the pipe surface (files, brushes, etc.), as well as, the coupling liquid or paste appropriate for the temperature of the section to be examined.

16.0 AUTOMATED ULTRASONIC TESTING (AUT)

- **INTRODUCTION**

The specification shall be applicable for Automated Ultrasonic Testing (AUT) system suitable for pipeline girth welds. The system shall be based on focused pulse-echo, tandem or through transmission methods enhanced with mapping image and augmented by Time Of Flight Diffraction (TOFD) technique.

- **REFERENCE DOCUMENTS**

ASTM E 1961-98 "Standard Practice for Mechanized Ultrasonic examination of Girth Welds using Zonal Discrimination with Focused Search Units". The inspection system shall meet and exceed the requirements of ASTM E 1961-98.

Appendix-E, "Automated Ultrasonic Girth Weld Testing", OS-F101, Submarine Pipeline Systems, January 2000.

API Std. 1104 – "Welding of Pipeline and Related Facilities".

- **APPROVED AGENCIES**

Following agencies for Automatic Ultrasonic Testing (AUT) are acceptable:

a) RTD Quality Services, Rotterdam, Netherlands
b) SHAW Pipeline Services, Canada
c) WELDSONIX, USA
d) UT Quality, Canada
e) SCI, Spain
f) SIEVERT India Private Ltd., India

In case bidder proposes to employ any other agency, the proposed agency shall meet the qualification criteria listed below and shall submit necessary documentation. The detailed system description and procedure shall be submitted for COMPANY evaluation/ approval.

Automatic Ultrasonic Testing (AUT) systems and agencies who have proven track record and have done a single project of diameter 20" or above and minimum length of 50 km and also have inspected a cumulative length of 500 km or above on large diameter Pipe lines in the last ten years shall only be accepted. The agency should have been approved by the reputed inspection agencies. The track record shall be submitted to the COMPANY for approval prior to engagement.

- **AUT SYSTEM**

The system shall meet and exceed the requirements of ASTM E1961-98.

The system shall provide an adequate number of examination channels to ensure the complete volumetric examination of the weld through the thickness in one circumferential scan. The evaluation zones should be of maximum 2.0mm height. The instrument linearity should be such that the accuracy is within 5%.

Each examination channel should be selective for pulse-echo or through transmission mode gate position and length for a minimum of two gates and gain.

TOFD techniques & B-scan mapping should be available to improve characterization. Recording thresholds should be selectable to display signals between 0 and 100% of full screen height for simple amplitude and transit time recording and it should be from 0 to 100% for B-scan or mapping type recording of data. Two recordable signals output per gate should be available being either analog or digital and representative of signal height and time of flight. Measuring distance accuracy of circumferential weld shall be within 1.0 cm from zero (0) position.

Electronic noise shall be lower than acoustical noise in all channels for the probes and sensitivities to be used during inspection. The signal to noise ratio for each channel during examination shall be at least ≥ 20 dB for shear waved probes.

- **COUPLING**

The coupling shall be obtained by using a medium suitable for the purpose. It shall be suitable for the temperature used. No residue shall remain on the pipe surface. A method should be employed to determine that constant coupling is achieved during examination. An examination of the test piece with its surface wiped dry should produce a record showing an absence of the couplant recording signal.

- **SEARCH UNITS**

The search unit shall meet all the requirements specified in Para 6.4 of ASTM E1961¬-98.

- **CALIBRATIONS**

Reference standards shall be manufactured from a section of unflawed project specific line pipe supplied by pipeline CONTRACTOR. The agency shall then submit the reference standard design to the COMPANY before manufacturing. No design changes in the reference standard shall be made without the prior approval. Annexure A3 of the standard ASTM E1961-98 provides an example for minimum requirements for reference standards.

The system shall be optimized and calibrated as stated in Para 7.0 and 8.0 of ASTM E 1961-98. Static and Dynamic calibration shall be done and the approved procedure shall clearly state the gain setting fixed for each channel.

The reference standard should be used to verify the scanning sensitivity at the start of each shift and thereafter at intervals not exceeding two (2) hours or ten (10) welds.

A re-calibration shall be carried out if :

a) The calibration of an inspection function differs more than +/- 3dB from the previous calibration
b) The gate settings need to be adjusted with more than +/- 1.5 mm with the previous calibration
c) After a weld repair
d) After equipment breakdown.

In case the calibration differs from the initial setting, outside the given tolerances, the applicable probe(s) and coupling shall be checked. If the calibration has to be changed, the welds before this calibration upto the previous calibration will be re-examined.

The reference standard design for calibration shall be approved separately. The procedure for calibration and verification shall be same as given above.

- **PROCEDURE**

A detailed AUT procedure shall be prepared and qualified for each wall thickness and joint geometry to be examined prior to the start of any NDT work. Repair procedure shall be separately qualified for each joint geometry. All the requirements of ASTM E1961-98 should be met. The procedure as a minimum shall include the following:

- Functional description of equipment
- Reference standards and guidelines controlling equipment maintenance
- Instructions for scanning device, Ultrasonic instrument, Ultrasonic electronics, Hard & Software for recording processing, Display presentation and storage of inspection data
- Transducer configuration(s), characteristics types coverage.
- Number of examination zones for each wall thickness to be examined.
- Gate settings
- Equipment settings -Description of calibration blocks including type, size and location of calibration reflectors, a) calibration intervals, b) calibration records - Static and dynamic calibration procedure
- Identification of inspection starting point scanning direction and indication of length inspected

- Method for scanner alignment and maintenance of alignment
- Allowed temperature range
- Couplant coupling and coupling control and channels provided to indicate lack of coupling and method to ensure constant coupling
- Transducer and over all functional checks
- Height and length sizing methodology
- Surface condition and preparation
- Description of inspection work
- Acceptance criteria and instructions for reporting including example of recorder chart and form to be used.
- A table indicating corresponding channel no., probe, type, location of reflector, probe coupling etc.

- **Setting of Inspection Gates**

Pulse-echo and Tandem Channels

With each transducer positioned for the peak signal response from the calibration reflector the detection gates are to be set. The gate shall start 2-6mm (allowance for width of heat affected zone) before the theoretical weld bevel preparation. The gate ends shall be after the theoretical weld centerline. All gates will be programmed to record amplitude and/or transit distance information. The length of the transit distance in the root channel will be extended to enable root penetration registration.

Mapping Channels

The mapping gates in the body of the weld shall start 2-6mm (allowance for width of heat affected zone) before the theoretical weld bevel preparation. The gate length will be extended to enable cap reinforcement registration. The mapping gates in the root will be set identical to the pulse-echo transit distance channels to enable the registration of the root penetration.

TOFD Channel

The TOFD gate start will be set 1 µSec before the arrival of the lateral wave and should extend up to the first back wall echo to achieve full cover of wall thickness.

Note: The gate settings may be altered if geometry indications dictate.

Sensitivity Settings

With each transducer positioned for the peak signal response from the calibration

reflector (flat bottom holes), the detection gates are to be set. In this position, the probe holder is fixed to the probe frame. The equipment sensitivity (echo amplitude) for all inspection channels shall be set at 80% Full Screen Height (FSH).

Mapping channels in the body of the weld will be used to detect the presence of porosity and in addition to identify the position of the weld cap reinforcement for pattern recognition purpose. The sensitivity as a minimum is equal to the related pulse- echo channels, increased with additional gain to ensure proper detection.

Mapping channels in the root will be used to identify the position of the root penetration for pattern recognition purpose. The sensitivity as a minimum shall be equal to the related pulse-echo channels, increased with additional gain to ensure proper detection.

The lateral wave of the TOFD channel sensitivity is set at 80% FSH.

- **TRAINING AND QUALIFICATION**

1. All Inspectors' of the COMPANY (Owner) shall be imparted training at the CONTRACTOR's cost. The inspector shall be provided complete awareness and knowledge regarding the equipment, limitations, capabilities complete range, method of operation, calibration, scanning, including development of suitable procedure, training on variables effecting the system performance and interpretation of results.

2. The Ultrasonic lead operator performing the examination shall be qualified in accordance with the COMPANY's written practice and in accordance with ASNT Practice SNT-TC-1A and EN 473 Level II. He should have experience in multichannel UT equipment and be trained in using mechanized UT manipulators.

- **FIELD EXAMINATIONS AND REPORTING**

All the requirements stated in Para 9 and 10 of ASTM E1961-98 shall be followed a minimum.

- **INTERPRETATION OF RESULTS**

General

With the transit distance measurements and with the information from the mapping and TOFD channels visible on the result presentation, indications shall be judged whether they are from the weld geometry or from the defects. The coupling channels will check for coupling loss; in case of coupling loss, a re-scan shall be carried out.

Inspection Result

The inspection result should be evaluated and/or reported as follows:

Welds shall be evaluated using both the pulse-echo and TOFD criteria shown below.

This shall be performed in parallel and rejection against either of these criteria shall be cause for rejection of the weld. The exceptions to this are described in the following notes:

1. All indications in the pulse echo channels should be evaluated which exceed the threshold level of 20% FSH.
2. Defect length shall be measured for the pulse-echo channels from the point where the signal exceeds 20% FSH to the point the signal falls below. The largest height assessed with TOFD or the greatest measured amplitude with pulse-echo shall be assumed to apply over the whole defect length.
3. If the indication cannot be resolved by TOFD i.e. the upper and lower flaw diffraction tips cannot be separately distinguished, no measurement can be made to determine the defect height. In this case, the signal from the pulse-echo channels will be solely used to determine that particular area of the scan.
4. Defects shall be assessed for interaction as follows:

   a) Horizontal interaction

   If the distance between two adjacent defects is less than the length of the smaller of the two defects, then the defect shall be treated as a single defect.

   b) Vertical interaction

   Vertical interaction of defects shall be assessed using TOFD. If the distance between the two adjacent defects is less then the height of the shorter of the two defects, than the defect shall be treated as a single defect. Where the individual defects cannot be resolved by TOFD for the vertical interaction, then the defects are assumed to interact and shall be treated as a single defect.

5. The maximum allowable accumulated defect length shall be as per the criteria given in welding specification.

- **ACCEPTANCE CRITERIA**

Weld quality shall be judged on the basis of the acceptability criteria mentioned in welding specification.

17.0 RADIOGRAPHY

17.1 Scope

This covers the radiographic inspection of all types of welded joints of the main pipeline.

The welded joints shall include the following :-

i. Full girth welds on the mainline construction including double jointing of pipe, if adopted.

ii. Welds for installation of block valves, insulating joints and other appurtenances and tie-ins.

iii. Welds at scraper launching and receiving barrels.

iv. Terminal Piping

17.2 Applicable Standards

This specification shall apply in conjunction with the following (all latest edition):

i. API 1104, Standard for welding Piplines and Related Facilities.

ii. ANSI B31.8, Code for Gas Transmission and Distribution Piping Systems.

iii. ANSI B31.4, Code for Liquid Petroleum Transportation Piping Systems.

iv. ASTM E94, Recommended practice for Radiographic Testing.

v. ASTM E142, Standard Method for Controlling Quality of Radiographic Testing.

vi. The American Society for Non-destructive Testing. Recommended Practice No. SNT - TC-1A Supplement A.

17.3 Procedure

17.3.1 The radiographic examination procedure to be adopted shall be submitted by the CONTRACTOR as per Annexure VI.

17.3.2 The procedure of radiographic examination shall be qualified to the entire satisfaction of COMPANY prior to use. It shall include but not be limited to the following requirements :

i. Lead foil intensifying screens, at the rear of the film shall be used for all exposures.

ii. Type 2 and 3 films as per ASTM E-94 shall be used.

iii. A densitometer shall be used to determine film density. The transmitted film density shall be 2.0 and 3.5 throughout the weld. The unexposed base density of the film shall not exceed 0.30.

iv. Radiographic identification system and documentation for radiographic interpretation reports and their recording system.

17.3.3 The CONTRACTOR shall qualify each procedure in the presence of the COMPANY prior to use.

17.3.4 The procedure of radiographic examination shall produce radiographs of sufficient density, clarity and contrast so that defects in the weld or in the pile adjacent to the weld, and the outline and holes of the penetrameter are clearly discernible.

17.3.5 All the girth welds of mainline shall be subjected to 100% radiographic examination. The CONTRACTOR shall furnish all the radiographs to the COMPANY, immediately after processing them, together with the corresponding interpretation reports on approved format. The details of the radiographs all alongwith the joint identification number shall be duly entered in a register and signed by the CONTRACTOR and submitted to the COMPANY for approval.

17.3.6 When the radiation source and the film are both on the outside of the weld and located diametrically opposite each other, the maximum acceptable length of film for each exposure shall not exceed the values given in Table-4 of API 1104. The minimum film overlap, in such cases, shall be 40mm. The ellipse exposure technique may be used on nominal pipe sizes of 2 inch and smaller provided that the source of film distance used is a minimum of 12 inch.

17.3.7 Three copies of each acceptable radiographic procedure (as per Annexure-VI) and three copies of radiographic qualification records, shall be supplied to COMPANY. One set of the qualifying radiographs on the job shall be kept by the CONTRACTOR's authorised representative to be used as a standard for the quality of production radiographs during the job. The other two sets shall be retained by COMPANY for its permanent record.

17.3.8 Three copies of the exposure charts relating to material thickness, kilo voltage, source of film distance and exposure time shall also be made available to COMPANY by the CONTRACTOR.

17.3.9 The CONTRACTOR shall, on a daily basis, record for each radiograph (1) radiograph's number, (2) welder's number (3) approximate chainage of weld location, (4) whether or not the welds meet the specified acceptance standards and (5) the nature and approximate location of unacceptable defects observed. It must be possible to relate back to a particular butt weld and welder on piping drawing and pipe line alignment drawing.

17.3.10 Each day's production of processed radiographs shall be properly packaged separately, identified

by at least the (1) date, (2) radiographic unit, (3) job locations, (4) starting and ending progress survey stations and (5) shall include original and three copies of the daily radiographic record. The package shall be submitted to the COMPANY daily when possible, but in no event later than noon of the following day.

17.3.11 The CONTRACTOR shall provide all the necessary facilities at site, such as a dark room with controlled temperature, film viewer etc. to enable the COMPANY to examine the radiographs.

17.3.12 The CONTRACTOR, if found necessary, may modify the procedure of radiographic examination suiting to the local conditions prevailing. This shall, however, be subject to the approval of the COMPANY.

17.3.13 COMPANY shall have free access to all the CONTRACTOR's work facilities in the field.

17.3.14 Any approval granted by the COMPANY shall not relieve the CONTRACTOR of his responsibilities and guarantees.

17.4 **Radiation Source**

17.4.1 Radiographic examination shall be carried out using x-radiations, Radiographic examination by Gamma rays may be allowed, at the discretion of the COMPANY, in case of inaccessible joints. Radiography by Gamma-Ray for tie-in-joints shall be acceptable provided D4 AGFA film or equivalent is used and the required sensitivity obtained.

17.4.2 Whenever possible, pipeline welds will be inspected by placing the radiation source inside the pipe, on the pipeline axis, with a radiation of 6.28 rad. (360°C).

If it is impossible to place the radiation source inside the pipe, the weld will be inspected with the source on the outside. An overlap of at least 40mm at the ends of each film shall be required to ensure that the first and last location increment numbers are common to successive films and to establish that no part of a weld has been omitted.

17.5 **Level of Quality**

The quality level of Radiographic sensitivity required for radiographic inspection shall be at least equivalent to the values in Fig. 6

17.6 **Penetrameters**

The image quality indicator (abbreviation : IQI) shall be used for the qualification of the welding procedure and during normal line production. Radiographic sensitivity shall be measured with the wire image quality indicator (Penetrameter). The penetrameter shall be selected according to DIN54109 or ISO1027. For radiographs made with the source on the outside, a penetrameter shall be placed on each side of the film with the smaller wiere of the penetrameter turned towards the end of the film itself. When a complete weld is radiographed in a single exposure using a source inside the piping, four

penetrameter approximately equally spaced around the circumference shall be used. During the procedure qualification, IQI shall be placed both on the source side and on the film side. The sensitivity obtained with IQI on the source side shall not be less than the values shown in Fig. 6 of this specification.

The sensitivity limit may be considered to have been reached when the outline of the IQI, its identification number and the wire of the required diameter show up clearly on the radiograph.

The COMPANY may authorise use of types of IQI other than those planned, provided that they conform with recognised standards and only if the CONTRACTOR is able to demostrate that the minimum sensitivity level required is obtained. For this demostration, a test shall be carried out comparing the IQI specified and the CONTRACTOR's, to show up the identification number and other details of the proposed IQI, which must be visible in the test radiograph.

17.7 **Film Identification Markers**

All films shall be clearly identified by lead numbers, letters, and/or markers. The image of the markers shall appear on the films, without interfering with the interpretation. These markers positions shall also be marked on the part to be radiographed and shall be maintained during radiography.

17.8 **Protection and care of film**

17.8.1 All unexposed films shall be protected and stored properly as per the requirements of API 1104 standard and ASTM E.94.

17.8.2 The exposed and unexposed film shall be protected from heat, light, dust and moisture. Sufficient shielding shall be supplied to prevent exposure of film to damaging radiation prior to and following the use of the film for radiographic exposure.

17.9 **Re-radiography**

17.9.1 The weld joints shall be re-radiographed in case of unsatisfactory quality of the radiographs, at the expense of the CONTRACTOR.

17.9.2 All the repaired weld joints shall be re-radiographed at no extra cost to the COMPANY in the same manner as that followed for the original welds. In addition, the repaired weld areas shall be identified with the original identification number plus the letter R to indicate the repair.

17.9.3 When evaluating repair film, radiographers shall compare each section (exposure) of the weld with the original film to assure repair was correctly marked and original defect removed.

17.9.4 The COMPANY will review prior to any repair of welds, all the radiographs of welds which contain, according to the CONTRACTOR's interpretation, unacceptable defects. The final disposition of all unacceptable welds shall be decided by the COMPANY.

17.10 **Qualification of Radiographers**

17.10.1 Pipeline radiographers shall be qualified in accordance with the requirement of API 1104 and to the full satisfaction of COMPANY.

17.10.2 Certification of all the radiographers, qualified as per 16.10.1 above, shall be furnished by the CONTRACTOR to the COMPANY before a radiographer will be permitted to perform production radiography. The certificate record shall include :

i. Background and Experience Record

ii. Training Course Record

iii. Technical Examination Record

iv. Doctor's report on radiographer's Oaecuer 0-1 acquity eye test.

v. Date of qualification

17.10.3 The radiographers shall be required to qualify with each radiographic procedure they use, prior to performing the work assigned to him in accordance with the specification.

17.11 **Preservation of Radiographs**

17.11.1 The radiographs shall be processed to allow storage of films without any discoloration for at least three years. All the radiographs shall be presented in suitable folders for preservation alongwith necessary documentation.

17.11.2 All radiographs shall become property of the COMPANY.

17.12 **Equipment and Accessories**

17.12.1 CONTRACTOR shall make necessary arrangement at his own expense, for providing the radiographic equipment, radiographic film and all the accessories for carrying out the radiographic examination for satisfactory and timely completion of the job.

17.12.2 For carrying out the mainline radiographic examination the CONTRACTOR shall be equipped with suitable mobile/ stationary type dark rooms.

These shall have all the required facilities for film processing. Film viewer used shall be equipped with the film illuminator that has a light source of sufficient intensity and suitably controlled to allow viewing film densities upto 4.0 without damaging the film.

17.13 **Radiation Protection**

17.13.1 CONTRACTOR shall be responsible for the protection and personnel monitoring of personnel with or near radiation sources.

17.13.2 The protection and monitoring shall comply with local regulations.

17.13.3 In view of visual hazards in the handling of Radioactive source of material, CONTRACTOR shall be solely responsible for complying with all rules and regulations set forth by Atomic Energy Commission or any other Government agency of India in this regard and COMPANY shall not be responsible and shall be kept indemnified by the CONTRACTOR for default (s) of whatever nature by the CONTRACTOR. Safety equipment as considered adequate by the COMPANY for all necessary personnel shall be made available for use and maintained for immediate and proper use by the CONTRACTOR.

17.14 **Display of Safety Instructions**

17.14.1 The safety provisions shall be brought to the notice of all concerned by display on a notice board at a prominent place at the work spot. The person responsible for the "safety" shall be named by the CONTRACTOR.

17.15 **Enforcement of Safety Regulations**

17.15.1 To ensure effective enforcement of the rules and regulations relating to safety precautions, the arrangement made by CONTRACTOR shall be open to inspection by COMPANY or its representatives.

17.16 **First Aid and Industrial Injuries**

17.16.1 CONTRACTOR shall maintain first aid facilities for its employees and sub-contractors.

17.16.2 CONTRACTOR shall make outside arrangements for ambulance service and for treatment of industrial injuries. Names of those providing these services shall be furnished to COMPANY prior to start of work and their telephone no. shall be posted prominently in CONTRACTOR's field office.

17.16.3 All critical industrial injuries shall be reported promptly to the COMPANY and a copy of CONTRACTOR's report covering each personal injury requiring the attention of physician shall be furnished to the COMPANY.

17.17 **No Exemption**

17.17.1 Notwithstanding the above there is nothing in these to exempt the CONTRACTOR from the operation of any other act or rules in force.

ANNEXURE-I
Sheet 1 of 3

ELECTRODE QUALIFICATION TEST RECORD

A. **Tested at (Site name)** Date :

Manufacturer's Name :

Brand Name :

Batch Number & Size Tested :

Classification & Code :

Intended for Welding in Position :

In combination with (if any) :

Code of Reference (used for testing) :

Special requirements (if any) :

B. **All Weld Tensile Test**

Base Material used :

Pre-heat temp. :

Postweld Heat Treatment Details :

Visual Examination :

Radiographic Examination Results :

Tensile Test Results :

Sl.No.	Identification No.	U.T.S.	Yield Point	Elongation
1.				
2.				

ANNEXURE-I
Sheet 2 of 3

C. **Impact Test Results**

Test Temperature : Notch in :

Type of Specimens (Charpy) : Size of Specimens :

Sl.No.	Specimen No.	Impact Valve	Average
1.			
2.			
3.			
4.			
d 5.			
6.			

D. **Chemical Analysis Result**

Electrode Size used :

Batch No. :

%C	%S	%P	%SI	%Mn	%Cr	%Ni	%Mo	Other

E. **Fillet Weld Test Results**

Welding Positions :

Base Materials :

Size of Electrode used :

Visual Inspection Results : 1)
2)
3)

Macro Test results :

ANNEXURE-I
Sheet 3 of 3

Fracture Test Results :

Remarks :

F. **Other Test Results**

1. Transverse Tensile Test :

In combination with :

Base Material used :

Position of Welding :

Preheat Temperature :

Post Weld Heat Treatment :

Radiography :

Identification No.	U.T.S.	Fracture in	Remarks

2. **Guided Bend Test**

Position	ID No.	Root, Face or Side Bend	Remarks
	1.		
	2.		
	3.		
	4.		
	5.		

Any other Tests :

Conclusion :

ANNEXURE-II
Sheet 1 of 2

STRESS RELIEF HEAT TREATMENT PROCEDURE SPECIFICATION

Name of the Heat-Treater :

Name of the Project : Specification Reference No.:

1. **General Details**

Name of the Equipment :

Name of the Assembly/ Part :

Assembly/ Part Drawing No. :

Material :

2. **Furnace Details**

Type of Heating : Gas/ Oil/ Elec. Res./ Induction Type of Heating (Tick mark)

Capacity (Size) :

Maximum Temp.(°C) :

Method of Temp. Measurement :

Atmosphere Control :

3. **Heat Treatment Cycle Details**

Changing Temp. °C :

Rate of Heating, °C/ Hr. :

ANNEXURE-II
Sheet 2 of 2

Soaking Temp. °C :

Soaking Time, Hrs. :

Rate of Cooling, °C/ Hr. :

Mode of Cooling :

4. Other Details, if any.

Notes :
The following documents shall be furnished alongwith the specifications :
i. Material Test Certificates
ii. Assembly/ Part Drawing.

ANNEXURE-III

Sheet 1 of 3

FORMAT FOR WELDING PROCEDURE SPECIFICATION (WPS)

Company Name _____ By _____

Welding Procedure Specification No. _____ Date _____ Supporting PQR No. (S) _____ Revision No. _____ Date _____

Welding Process (es) _____ Type (s) _____

(Automatic, Manual, Machines or Semi Auto)

JOINTS

Joint Design _____

Backing (Yes) _____(No) _____

Backing Material (Type) _____

Sketches Production Drawings. Weld Symbols Written

Description should show the general arrangement of the parts to be welded. Where applicable, the root specing and the details of weld groove may be specified.

(At the option of the Manufacturer sketches may be attached to illustrate joint design weld layers and bead sequence e.g. for notch toughness procedures, for multiple process procedures, etc.)

BASE METALS

P.No. _____ Group No. _____ to P. No. _____ Group No. _____

OR

Specification type and grade _____

to Specification type and grade _____

OR

Chern. Analysis and Mech. Prop. _____

to Chern. Analysis and Mech. Prop. _____

Thickness Range :

Base Metal: Groove _____ Fillet _____

Deposited Weld Metal: Groove _____ Fillet _____

Pipe Dia Range : Groove : _____ Fillet _____

Other _____

ANNEXURE-III
Sheet 2 of 3

FILLER METALS

F.No. _____ Other _____
A.No. _____ Other _____
Spec. No. (SFA) _____
A WS No. (Class) _____
Size of filler metals _____
_____
(Electrodes, Cold Wire, Hot Wire etc.)
Electrode-Flux (Class) _____
Flux Trade Name _____
Consumable Inset _____
Each base metal/filler metal combination should be recorded individually.

WPS NO. _____ Rev. _____

POSITIONS :	**POSTWELD ED HEAT TREATMENT**
Position (s) of Groove _____ Welding Progression: UP _____ Down ____ Position (s) of Fillet _____	Temperature Range _____ Time Range _____
PREHEAT Preheat Temp. Min. _____ Interpass Temp. Max. _____ Preheat Maintenance _____	**GAS** Shielding Gas (es) _____ Percent Composition (mixtures) _____ _____ Flow Rate _____ Gas Backing _____ Trailing Shielding Gas Composition _____

ELECTRICAL CHARACTERISTICS

Current AC or DC_____ Polarity _____
Amps (Range) _____ Volts (Range) _____
(Amps and volts range should be recorded for each electrode size, position, and thickness, etc. This information may be listed in a tabular form similar to that shown below).
Tungsten Electrode Size and Type _____
(Pure Tungsten, 2% Ceriated, etc)

Mode of Metal Transfer for GMAW _____
(Spray arc, short circuiting arc, etc.)

ANNEXURE-III
Sheet 3 of 3

Electrode Wire feed speed range _____

_____

TECHNIQUE

String or Weave Bead _____

Orifice or Gas Cup Size_____

Initial and Interpass Cleaning (Brushing, Grinding, etc.) _____

_____

Method of Back Gouging _____

Oscillation _____

Contact Tube to Work Distance _____

Multiple or Single Pass (per side) _____

Multiple or Single Electrodes _____

Travel Speed (Range) _____

Peening _____

Other _____

_____

Weld Layer(s)	Process	Filler Metal		Current		Volt Range	Travel Speed Range	Others
		Class	Dia	Type Polarity	Amp. Range			
								e.g. Remarks, comments, Hot wire Addition, Technique Torch Angle, etc.

ANNEXURE-IV
Sheet 1 of 3

FORMAT FOR PROCEDURE QUALIFICATION RECORD (PQR)
RECORD ACTUAL CONDITIONS USED TO WELD TEST COUPON

Company Name _____

Procedure Qualification Record No. _____ Date _____

WPS No. _____

Welding Process (es) _____

Types (Manual, Automatic, Semi-Auto) _____

JOINTS

Groove Design of Test Coupon

(For combination qualification the deposited weld metal thickness shall be recorded for each Filler metal or process weld)

BASE METALS Material Sepc. _____ Type of Grade _____ P.No. _____ to P.No. _____ Thickness of Test Coupon _____ Diameter of Test Coupon _____ Other _____ _____	**POSTWELD HEAT TREATMENT** Temperature _____ Time _____ Other _____ _____ _____ _____
FILLER METALS Weld Metal Analysis A No. _____ Size of Filler Metal _____ Filler Metal E.No. _____ SF A Specification _____ A WS Classification _____ Other _____ _____	**GAS** Type of Gas on Gases _____ Composition of Gas Mixture _____ Other _____ _____ _____ _____
POSITION Position of Groove _____ Weld Progression (Uphill, Downhill) _____ Other _____ _____	**ELECTRICAL CHARACTERISTICS** Current _____ Polarity _____ Amps. _____ Tungsten Electrode Size _____ Other _____

ANNEXURE-IV
Sheet 2 of 3

PREHEAT	**TECHNIQUE**

Phreheat Temp. _____
Interpass Temp. _____

Travel Speed _____
String or Weave Bead _____
Oscillation _____
Multipass or Single Pass (per side) _____
Single or Multiple Electrodes _____
Other _____

GUIDED BEND TESTS

Type of Figure No.	Result

TOUGHNESS TESTS

Specimen No.	Notch Location	Notch Type	Test Temp.	Impact Value	Lateral Exp.		Drop Weight	
					% Shear	Mils	Break	No Break

FILLET WELD TEST

Result - Satisfactory: Yes _____ No _____ Penetration into Parent Metal: Yes _____ No. _____

Marco – Results _____

OTHER TESTS

Type of Test

_____

Deposit Analysis

_____

Other

_____

_____

Welder's Name _____ Clock No. _____ Stamp No. _____

ANNEXURE-IV
Sheet 3 of 3

Test Conducted by _____ Laboratory Test No. _____

We certified that the statements in this record are correct and test welds were prepared, welded and tested in accordance with the requirements of Section IX of the ASME Code.

Date : _____ Manufacturer : _____

By : _____

(Detail of record of tests are illustrative only and may be moulded to conform to the type and number of tests required by codes and specifications).

ANNEXURE-V
Sheet 1 of 2

FORMAT FOR MANUFACTURER'S RECORD FOR WELDER OR WELDING OPERATOR QUALIFICATION TESTS

Welder Name _____ Check No. _____ Stamp. No. _____

Using WPS No. _____ Rev. _____

The above welder is qualified for the following ranges

Variable	Record Actual Values Used in Qualification	Qualification Range
Process	_____	_____
Process Type	_____	_____
Backing (metal, Weld metal, flux, etc)	_____	_____
Material Spec.	_____ to _____	_____ to _____
Thickness		
Groove	_____	_____
Filler	_____	_____
Diameter		
Groove	_____	_____
Filler	_____	_____
Filler Metal		
Spec. No.	_____	_____
Class	_____	_____
F. No.	_____	_____
Position	_____	_____
Weld Progression	_____	_____
Gas Type	_____	_____
Electrical Characteristics		
Current	_____	_____
Polarity	_____	_____

ANNEXURE-V
Sheet 2 of 2

Guided Bend Test Results

Type and Fig. No.	Result

Radiographic Test Results
For alternative qualification of groove welds by radiography

Radiographic Results _____

Fillet Weld Test Results

Fracture Test (Describe the location, nature and size of any crack of tearing of the specimen _____
Length and Per Cent of Defects _____ inches _____%
Macro Test – Fusion _____
Appearance - Fillet Size (ing) _____x_____ Convexity or Concavity _____

Test Conducted by _____ Laboratory - Test No. _____

We certify that the statements in this record are correct and that the test welds were prepared. Welded and tested in accordance with the requirements of Section IX of the ASME Code.

Date _____ Organization _____
By _____

(Details of record tests are illustrative only and may be modified to conformation to the type & number of tests required by the Code).

Note: Any essential variables in addition to those above shall be recorded.

ANNEXURE-VI

Sheet 1 of 1

RADIOGRAPHIC PROCEDURE QUALIFICATION RECORD FOR PIPE WELDING

1. Location
2. Date of Testing
3. Name of the Contractor / Agency
4. Material : Carbon steel / Alloy Steel / Stainless Steel

4.A Technique: DWSI / SWSI / DWDI

5. Diameter & Thickness:
6. Type of Weld Joint:
7. Radiation Source:
8. Intensifying Screens/Lead Screens:
9. Geometric Relationship:
10. Limit of Film Coverage:
11. Film Type and Make:
12. Exposure Time:
13. Processing:
14. Density:
15. Sensitivity:

16.* Type of penetrameter:
(Source side)

17.* Type of penetrameter:
(Film side)

Signature of Contractor / Agency with Seal

Approval of MECON's Inspector

* Ref. Para regarding recommended practice on placement of penetrameters Article 22, SE 142, ASME Sec. V.

* For "Random Radiography" lines placement of penetrameters as per Article 2, ASME, Sec. V is permitted.

ANNEXURE-VII
Sheet 1 of 1

WELDERS IDENTIFICATION CARD

Name :

Identification :

Date of Testing :

Process :

Diameter and Thickness :

Thickness Range Qualified :

Diameter Range Qualified :

WPS No. :

Welding Position & Progression :

Type of welding consumables used :

Valid Till :

Photograph

Approved by :

Employer's Signature with seal

WELDINGSPECIFICATIONCHARTSTOSPECIFICATIONFORWELDING OF ONSHORE PIPELINES NO.:MEC/S/05/21/02

24" LINE PIPE THK 10.31 to 17.1 mm				
MATERIAL SPECIFICATIONS	PIPES	**API 5L GR X-70 PSL 2**		
	FITTINGS	**-**		
	FLANGES	**-**		
	OTHERS	**-**		
BASE METAL 'P' NO	-			
WELDING PROCESS	**GROOVE JOINTS SINGLE SIDE BEVEL**			
	BUTT		**OTHER THAN BUTT**	
	ROOT & HOT PASS : **SMAW**	FILLER & CAP PASS : **SMAW/FCAW**	ROOT PASS : **N.A.**	FILLER PASS : **N.A.**
	FILLET JOINTS / SOCKET JOINTS : **N.A.**			
WELDING MATERIAL	**GROOVE JOINTS**			
	BUTT		**OTHER THAN BUTT**	
	ROOT PASS:**E6010** HOT PASS: **E8010- P1**	FILLER & CAP PASS **E8010-P1 (SMAW) /E81T8G (FCAW)**	ROOT PASS : **N.A.**	FILLER PASS : **N.A.**
	FILLET JOINTS / SOCKET JOINTS : **N.A.**			
	BACKING RING	**N.A.**	CONSUMABLE INSERT	**N.A.**
JOINT PREPARATION	**API 1104 , Latest edition**			
GASES	PURGING :	**N.A.**	SHIELDING :	**N.A.**
GAS COMPOSITION	PURGING :	**N.A.**	SHIELDING :	**N.A.**
PREHEATING	PREHEAT TEMP:	**100°C MIN**	POST HEATING :	**N.A.**
CONTINUITY OF WELDINGAND PREHEAT : REFER TO SPECIFICATION				
POST WELD HEAT TREATMENT	HOLDING TEMP :	**N.A.**	HOLDING TIME :	**N.A.**
	RATE OF HEATING:	**N.A.**	MIN. HOLDING TIME :	**N.A.**
	METHOD OF	**N.A.**	RATE OF COOLING :	**N.A.**
MECHANICAL PROPERTY REQUIREMENTS	CHARPY 'V' NOTCH VALUE :	MIN: **22 J**	AVERAGE : **27 J**	
	AT TEMPERATURE :	**0°C**		
	HARDNESS :	≤248 HV_{10}		
CODE OF FABRICATION :	**API 1104 Latest edition**			

TECHNICAL NOTES :

1. **The Non-Destructive Testing (NDT) shall be examined by X-ray.**
2. **Agfa D7 or equivalent Film shall be used for radiography by X-Ray.**
3. **The welding electrode for CS conduit pipe shall have tensile strength greater than or equal to the SMYS of the CS conduit pipe material.**

MECON Limited	**WELDING SPECIFICATION CHART**	**Specification No.: MEC/WSC/01**	**Rev.0**

Rev. : 0
Edition : 1

SPECIFICATION
FOR
HYDROSTATIC TESTING OF ONSHORE PIPELINE

SPECIFICATION NO.: MEC/S/05/21/03

(OIL & GAS SBU)
MECON LIMITED
DELHI 110 092

CONTENTS

SL.NO.	DESCRIPTION
1.0	SCOPE
2.0	REFERENCE CODES, STANDARDS AND SPECIFICATIONS
3.0	GENERAL
4.0	HYDROSTATIC TEST PROCEDURE MANUAL
5.0	TEST PRESSURE
6.0	EQUIPMENT AND INSTRUMENTATION
7.0	PROCEDURES
8.0	ACCEPTANCE
9.0	TERMINATION
10.0	TEST REPORT
11.0	MEASUREMENTS
12.0	CALCULATION
13.0	PRECAUTIONS DURING THE TEST
14.0	PRESERVATION OF PIPELINE

TABLES

TABLE A DIFFERENCE BETWEEN WATER THERMAL EXPANSION FACTOR AND STEEL THERMAL EXPANSION FACTOR.

FIGURES

FIG.1 WATER COMPRESSIBILITY FACTOR VS PRESSURE AND TEMPERATURE.

PREPARED BY:	CHECKED BY:	APPROVED BY:	ISSUE DATE :
(Shalini Singh)	(Sunil Kumar)	(A.K. Johri)	Nov. 2008

1.0 SCOPE

1.1 This specification covers the minimum requirements of supply, works and operations to be performed by CONTRACTOR for hydrostatic testing of cross-country steel pipelines transporting hydrocarbons in liquid or gaseous phase under high pressure. This specification does not cover the requirements of drying/precommissioning of the tested pipelines. This specification shall be read in conjunction with the conditions of all specifications and documents included in the CONTRACT between COMPANY and CONTRACTOR.

2.0 REFERENCE CODES, STANDARDS AND SPECIFICATIONS

2.1 Reference has been made in this specification to the latest edition/ revision of the following codes, standards and specifications.

a)	ANSI B 31.8	Gas Transmission and Distribution Piping Systems.
b)	ANSI B 31.4	Liquid Petroleum Transportation Piping Systems.
c)	API RP 1110	Pressure Testing of Liquid Petroleum Pipelines.
d)	ASME Sec. VIII Div-1	Boiler & Pressure Vessel Code.
e)	OISD 226	Natural Gas Transmission Pipelines and City Gas Distribution Networks

2.2 In case of conflict between the requirements of this specification and that of the above referred coded, standards, and specifications, the requirements of this specifications shall govern.

2.3 For the purpose of this specification the following definitions shall hold:

- the words 'shall' and 'Must' are mandatory;

- the words 'Should', 'May', and 'Will' are non-mandatory, advisory or recommended.

3.0 GENERAL

3.1 Hydrostatic test shall be performed on the entire length of the pipeline. Hydrostatic test shall be performed in accordance with approved Hydrostatic Test Diagrams for each test section. The maximum length of each test section shall not exceed 50 kms.

3.2 For pipeline sections which in COMPANY's opinion, once installed would require an inordinate amount of effort for repair in case of a leak, a provisional pre-test shall be conducted. However, after installation, such pretested sections shall be tested again alongwith the entire pipeline.

3.3 Hydrostatic test shall commence only after mechanical and civil works completion, i.e., all welds have been accepted and the pipeline has been laid and backfilled according to the specifications. Hydrostatic test shall include those sections which have been previously tested, viz. Rail/ road crossing, major water crossings including test on banks and in place after installation, and scraper traps at the terminals. CONTRACTOR shall perform all works required for hydrostatic testing after obtaining prior written approval from the COMPANY.

3.4 The pipeline shall be tested in accordance with the requirements of the latest edition of ANSI B 31.8 or ANSI B 31.4, OISD 226 as applicable, and requirements laid down in this specification.

4.0 HYDROSTATIC TEST PROCEDURE MANUAL

CONTRACTOR shall prepare for COMPANY's approval a hydrostatic test procedure manual. The procedure shall strictly comply with the requirements of this specification and shall be submitted to COMPANY for approval well in advance. The procedure manual shall include all temporary materials & equipment, but not be limited to the following items:

a) For the systems to be tested, a diagram indicating all fittings, vents, valves, temporary connections, relevant elevations and ratings. The diagram shall also indicate injection locations and intake and discharge lines.

b) Estimated amount of test water, water sources, including required concentration of corrosion inhibitors and additives, procedure for inhibitor injection and control of concentration.

c) Filling and flushing procedures, including a complete description of all proposed equipment and instruments (including spares), their location and set-up.

d) The type and sequence of pigs and the pig tracking systems for cleaning and removal of air pockets. Pig inspection procedures, including procedure to be followed in case the calliper pig indicates damage.

e) Procedures for levelling and stabilization after filling and for pressurization and to allow for temperature stabilization.

f) Pressure testing procedure including a complete description of all proposed equipment and instruments (including spares), their location and set-up, and proposed system for observation and recording of data during the pressure test.

g) Procedure for detection and location of leaks.

h) Procedure for dewatering the pipeline section(s) after testing, including a complete description of all proposed equipment and instruments, (including spares), their location and set-up, the type and sequence of pigs and the pig tracking system along with the pig specifications.

i) Forms for recording the test data.

5.0 TEST DURATION AND PRESSURE

5.1 The duration of hydrostatic test shall be a minimum of 24 hours after stabilization and the test pressure shall be as indicated in the approved hydrostatic test diagram.

5.2 Unless specified otherwise in the CONTRACT, the hydrostatic test pressure shall be as follows :

For pipeline handling hydrocarbon in gaseous phase :

a) 1.25 times the design pressure for pipeline located in Class-1 and Class-2 locations as per ASME B 31.8.

b) 1.4 times the design pressure for pipeline located in Class-3 and Class-4 locations as per ASME B 31.8.

6.0 EQUIPMENT AND INSTRUMENTATION

The CONTRACTOR shall furnish all necessary equipment for performing the work as stated in cleaning, flushing, filling, levelling, stabilizing, testing and dewatering procedures. This shall include the following :

a) Pigs for filling , cleaning and gauging including

- Cleaning pigs with spring loaded steel wire brushes except for internal coated pipes. In this case pigs to be provided with nylon / polyurethane brushes.

- Four cup batching pigs

- Calliper pigs with gauge plate diameter equal to 95% of the heavy wall pipe in the pipe sections. Gauging pig fitted with gauge plate.

The CONTRACTOR shall provide sufficient number of pigs including spares.

b) Fill pumps : The CONTRACTOR shall determine the type and number of fill pumps in order to guarantee the following :

Differential head 20% greater than the maximum required.
Flow rate : 400m^3 / hr. min. ; 1000m^3 / hr. max.
If a single pump is used, a standby unit must be available.

c) Variable speed positive displacement pumps equipped with a stroke counter to pressurise the line with a known stroke and capable of exceeding the maximum test pressure by at least 20 bar.

d) Two positive displacement meters to measure the volume of water used for filling the line. These meters shall be provided with a callibration certificate not older than one month.

e) Portable tanks of sufficient size to provide a continuous supply of water to the pump during pressurizing.

f) Bourdon pressure gauges of suitable pressure range and accuracy.

g) Dead weight testers with an accuracy of 0.01 bar measuring in increments of 0.05 bar provided with a calibration certificate not older than one month.

h) Two 48 hours recording pressure gauges tested with charts and ink gauges tested with dead weight tester prior to use. These shall be installed atp the test heads.

i) Pressure recording charts.

j) Two temperature recorders for fill water.

k) Thermocouples for measuring the pipe wall temperature.

l) Two laboratory thermometers 0°C to 60°C range, accuracy ± 0.1 degree to be used in thermowells.

m) Means to measure the volume of water necessary to drop the line pressure by 0.5 bar (container on scales or graduated cylinder).

n) Injection facilities to inject additives into the test medium in the required proportions.

o) Communication equipment suitable for a continuous connection between the beginning and the end of the test section and with the inspection team along the line, in accordance with the requirements of local Authorities.

p) The temporary scraper traps shall be installed according to the testing sections fixed in the test procedure manual. Proper piping and valuing arrangements shall be available to allow launching and receiving of each pig independently.

The test heads shall be sized in conformity with ASME specification Section VIII, Division 2 with particular reference to Appendices 4 and 5.

q) Thermocouples for assuring the temperature of the pipe wall shall be installed on the pipeline to be tested:

- 1 thermocouple at about 500m distance from the pumping head.
- 1 thermocouple every 2500m of the pipe the spacing may be increased to maximum 5000m depending on the terrain and nature of sub-soil along the alignment of section.
- 1 thermocouple at about 500m distance from the terminal head.

The spacing may be increased to maximum 5000 metre depending on the terrain and nature of sub soil along the alignment of test section.

Thermocouples shall be attached on the external surface of the pipe after removal of external coating and shall be adequately protected and COMPANY's coating instructions shall be followed.

7.0 **PROCEDURES**

7.1 Equipment and/or parts which need not or must not be subjected to the test pressures, must be disconnected or separated from the pipeline to be tested.

7.2 If the difference of minimum and maximum atmosphere temperature should cause thermal instability on the pipe section directly exposed to atmospheric condition, the scraper traps and above ground pipeline shall be properly protected.

The pipeline test shall exclude long segments of line exposed to atmospheric conditions, viz. Aerial lengths on piers, suspension bridges, etc., which shall be tested separately.

7.3 The test medium shall be soft non-aggressive water furnished by the CONTRACTOR. The water to be used shall be filtered, shall not be contaminated, and free from sand or silt. CONTRACTOR shall submit laboratory test reports of water used for testing. The possible use of sea water shall be subject to its degree of cleanliness, the possibility of obtaining a pre determined salinity neutralization and the use of corrosion inhibitors, this at the sole discretion of COMPANY. CONTRACTOR shall provide COMPANY approved corrosion inhibitors, oxygen scavengers and bactericides to be added to the test water. The CONTRACTOR shall furnish and install all temporary piping which may be necessary to connect from source of water to its pumps and manifolds/ tankage.

7.4 Before filling operation the CONTRACTOR shall clean the pipeline by air driven pigs provided with spring loaded bushes and chisels to remove all mill scale rust/ sand from the inside of pipe section. For this purpose temporary headers for air cleaning shall be attached to the pipeline. The number of pig runs is depending upon the cleaning results and shall be determined by the COMPANY at site.

7.5 "After cleaning the pipeline by using air and acceptance by Company, gauging shall be carried out by using gauging pig. The gauge plate diameter shall be equal to 95% of inside diameter of the heaviest wall pipe in the test section. While computing the ID of heaviest wall pipe, pipe manufacturing tolerance shall not be considered. A 10mm thick aluminium plate shall be used for making gauge plate.

After receipt of gauging pig at the other end, the gauge plate shall be inspected in the presence of Company representative. A deformed, bent or severally nicked plate or damaged pig shall be evidence of gauging pig run failure and the same is not acceptable to company. In such cases the Contractor shall repair and rectify the line and repeat the gauging pig run to the satisfaction and approval of the Company Representative. Any obstruction and/ or faults such as dents, buckles, flat spots, etc. analysed and noted during gauging pig run shall be located and any necessary repair work shall be performed to rectify the same to the satisfaction of the Company. A written approval shall be obtained from Company regarding successful completion of gauging pig run.

After acceptance of gauging operation, air header shall be cut and removed. Pre-tested test headers loaded with three numbers of four cup batching pig shall be welded to test Section. Un-inhibited water equal to 10% of the volume of test section shall be introduced in front of the first pig. The first pig shall be launched by introducing about 1.5 km un-inhibited water.

Then the second pig shall be launched by pumping the inhibited water till the second pig is received at the other end. The thermal stablisation and pressurisation can now the started".

7.6 Thermal Stabilization

After a check has been made to confirm if the pressure has attained at least 1 bar (g) on the highest section, thermal stabilization can be started.

Thermal equilibrium between the pipeline and environment shall be checked through the thermocouples installed on the pipeline.

Temperature readings shall be made at 2 hours-intervals. Thermal stabilization shall be considered to have been achieved when a difference not higher than 1°C is attained between the average values of the last two readings. Thermal stabilization completion shall be approved by COMPANY.

7.7 Pressurisation

Pressurisation shall be performed in the presence of COMPANY at moderate and constant rate not exceeding 2 bars/min. One pressure recording gauge shall be installed in parallel with the dead weight tester. Volume required to reach the test pressure shall be recorded periodically throughout the pressurization as follows:

- each 5 bar increments up to 80% of test pressure as recorded by the dead weight tester;
- each 2 bar increment between 80% to 90% of test pressure as recorded by the dead weight tester;
- each 0.5 bar increment between 90% of test pressure to full test pressure as recorded by the dead weight tester.

The pressurizing shall be cycled according to the following sequence:

a) Pressurize to 50% of test pressure, hold pressure for 1 hour.

b) Drop pressure to static head of test section at test head.

c) Pressurize to 75% of test pressure, hold pressure for 1 hour.

d) Drop pressure to static head of test section at the test head.

e) Pressurize to test pressure.

During the pressurization to each test pressure, two tests shall be carried out for the calculation of air volume in the pipeline under test.

In case, during the hold pressure periods indicated above, a decrease in pressure is observed, the operations shall not be repeated more than twice, after which the line shall not be considered capable of test, until the CONTRACTOR has isolated and eliminated the cause for the lack of water tightness.

7.8 Air Volume Calculation

In order to check the presence of air in the pipeline, two separate consecutive pressure lowering of 0.5 bar shall be carried out.

For calculation of air in the pipeline the second pressure lowering shall be used, and the relevant drained water shall be accurately measured (V_1). This amount measured shall be compared to the theoretical amount (V_p) corresponding to the pressure lowering that has been carried out, by using the procedure outlined in clause 12.1 of this specification.

If no air is present in the length under test:

$$\frac{V_1}{V_p} = 1$$

In order that the above ratio is acceptable, it shall not differ from 1 by more than 6% (i.e. 1.06).

If the air found in the pipeline is within the above established tolerance, then the pressurizing can continue. If the ratio V_1 / V_p exceeds 1.06, the hydrostatic testing cannot go on and additional pig passages shall be performed to remove the air pockets.

The test shall be repeated as per the above procedure until above estimated tolerances are satisfied. The pressurizing can then continue, to reach the value of test pressure.

7.9 Testing

After the section has been pressurized and the air volume test has given acceptable results the test pressure shall be held for a minimum of 24 hours after stabilization. After temperature and pressure has stabilized, the injection pump shall be disconnected and all connections at the test heads shall be checked for leakage. The pressure recorders shall then be started with the charts in a real time orientation for continuous recording throughout the test.

During the testing period the following measurements shall be recorded :

- every one hour pressure measurements form dead weight testers.
- every two hours the ambient temperature and the pipe temperature at the thermocouples.

All data shall be recorded on appropriate forms attached to the hydrostatic test procedure manual. Care shall be taken that the maximum test pressures are not exceeded.

Bleed-off water shall be accurately measured and recorded.

8.0 **ACCEPTANCE**

8.1 The hydrostatic test shall be considered as passed if pressure has kept a constant value throughout the test duration, except for change due to temperature effects. Such change shall be evaluated as described under clause 12.2 of this specification.

The pressure change value as a function of temperature change shall be algebraically added to the pressure value as read on the meters. The pressure value thus adjusted shall be compared with the initial value and the test shall be considered as acceptable if the difference is less than or equal to 0.3 bar. In case of doubt the testing period shall be extended by 24 hours.

8.2 If test section fails to maintain the specified test pressure after isolation, CONTRACTOR shall determine by search the location of leakage or failure. All leaks and failures within the pipe wall or weld seam shall be repaired by replacement of entire joint or joints in which leakage or failure occurs. In circumferential welds the method of repair shall be determined by the COMPANY. CONTRACTOR shall comply with instructions of the COMPANY whether to replace a section of the line pipe that includes the line leak or whether to repair the circumferential weld. This repair should however meet the requirements of 'Specification for Welding Pipelines and Related Facilities'. Where failure occur in pipeline field bends, bends shall be replaced with same degree of bends. After completion of repairs, the hydrostatic test shall be repeated in full, as per this specification.

8.3 The cost of repairs or replacements, followed by refilling and repressurizing the line, due to poor workmanship, shall be borne by the CONTRACTOR. In the event of leaks or failures resulting form faulty COMPANY furnished materials, CONTRACTOR shall be reimbursed for furnishing all labour, equipment, materials, except those materials furnished by the COMPANY, and transportation necessary to repair and repressurize the section of the pipeline to the pressure at the time of recognition of leak or line failure. CONTRACTOR shall be entitled for compensation as per the provisions of the CONTRACT. All work of reinstalling line pipe, to replace pipe failures shall be done in accordance with the relevant specification included in the CONTRACT.

8.4 CONTRACTOR shall haul and stockpile all damaged and defective pipes to storage locations designated by the COMPANY. All cracks and splice resulting from failures shall be coated with an application of grease to preserve the characteristics of failures from corrosion. Joint of failed pipes shall be marked with paint, with a tag indicating failure details, date and location of failure and pressure at which failure occurred.

9.0 **TERMINATION**

After the positive results of testing and collection of all data the test shall be terminated upon written approval given by the COMPANY.

9.1 CONTRACTOR shall dewater the tested line as per the following requirement after test acceptance.

The dewatering shall be carried out by using four cup pigs and foam pigs driven by compressed air. The detailed dewatering procedure shall be developed by the CONTRACTOR

in such a way as to provide adequate control of pigs during dewatering. Pigs and equipment required for dewatering the line shall be furnished by CONTRACTOR and shall be approved in advance by the COMPANY. Four cup pigs shall first be passed through the line to displace the water. Foam pigs shall then be passed in order to complete the line dewatering. CONTRACTOR shall use a number of foam pigs, each in different colors/ numbered for this purpose. The line shall be considered dewatered when a negligible amount of water is flushed out by the last foam pig and approval is given by the COMPANY.

9.2 During dewatering, care shall be taken to properly dispose the discharging water in order to avoid pollution, damages to fields under cultivation and/or existing structures and interference with the traffic. Before start of dewatering and disposal of hydrotest water, a procedure for treatment of inhibited water to prevent pollution shall be submitted by contractor to owner/ consultant for review and approval.

9.3 Upon completion of the testing and dewatering operation, any provisional traps for pigs and all other temporary installation relating to the test shall be removed. Subsequently the individual sections of the line already tested shall be joined in accordance with the requirements of relevant specifications issued for the purpose.

10.0 TEST REPORT

A complete report signed by CONTRACTOR and the COMPANY shall be submitted upon completion of the hydrostatic test for each test section.
This report shall contain as a minimum:

- the cleaning, flushing, filling and testing procedures used;
- schematic layout of cleaning, filling and testing facilities;
- instruments calibration certificates;
- a profile of the pipeline that shows the test sites, all instrument and injection connections;
- pipe filling logs and records;
- additive specification, required concentration and additive injection records;
- pig specifications;
- pig inspection records including photographs of the damages;
- records of gauging pig survey and photographs;
- pressurization and stabilization records;
- pressure and temperature recording charts with appropriate information inscribed thereon;

- temperature data along the pipeline;
- dead weight tester logs and recording;
- air volume calculations;
- pressure change due to temperature change calculations;
- environmental data;
- depressurization logs and records;
- dewatering procedure and schematic layout of relevant facilities;
- dewatering logs and records;
- records and photograph of all leaks.

11.0 MEASUREMENTS

11.1 Water Amount Measurement

The water volume added to the section to be tested shall be measured during the filling stage through a positive displacement meter (a turbine meter may also be used). In the calculation, as per clause 12.1 of this specification, use shall be made of the geometrical volume of the section in question.

11.2 Pressure Measurement

Pressure shall be measured with a dead weight tester with an accuracy of 0.01 bar that shall permit readings of at least 0.05 bar.

During the test the pressure shall be recorded by means of a pressure recorder featuring the following specifications:

Accuracy	:	± 0.1% of the full-scale value
Recording	:	continuous on tape or disk, graph width 100mm
Feed	:	20mm/h for tape diagrams, 7.5°/h for disk diagrams
Recording	:	to be such as to record pressure between 50% and 90% of the diagram width.

The pressure recorder shall be checked by means of dead weight tester at the beginning, during and at the end of the hydrostatic test.

A pressure gauge tested with dead weight tester shall be connected in parallel to the dead weight tester at the test head.

11.3 **Temperature Measurements**

Water temperature shall be taken at every 2 hours through the thermocouple that have been installed on the pipe wall along the section under test on the pipe wall.
Further the temperature measurement shall be taken :

- during the filling operation
- during the thermal stabilization stage
- during the hydrostatic test

The thermocouple's sensitivity shall enable temperature readings with an accuracy of ±0.2°C.

b) Water temperature shall also be measured on the pump delivery by means of a recording thermometer (temperature recorder) throughout the filling stage.

The recording thermometer shall have the following features :

Accuracy ± 1% of the scale range

Scale - 10° to + 40° C

Recording: Continuous on tape or disk, diagram within 100mm

Feed : 20mm/h for tape diagrams, 7.5°/h for disk diagrams.

c) Ground temperature shall be taken by measuring pipe temperature at the thermocouple prior to starting the filling operation.

d) Environmental temperature shall be recorded from the beginning of pressurization to the end of the test by means of a recording thermometer featuring the following characteristics:

Accuracy ± 1% of the scale range

Scale - 0° to + 60° C

Recording: Continuous on tape or disk, diagram width 100mm

Feed : 20mm/h for tape diagrams, 7.5°/h for disk diagrams.

12.0 **CALCULATIONS**

12.1 The theoritical water amount that is necessary for filling the section to be tested shall be obtained from the geometrical volume of the section considering the pipe tolerances.

The theoretical water amount that is necessary for pressurizing the section shall be calculated by means of the following formula:

$$Vp = (0.884\ r\ i/t + A) \times 10^{-6} \times V_t \times \Delta P \times K$$

Where:

Vp = computed water amount required to raise by P the pressure in the section to be tested (m^3).

Vt = geometrical volume of the section (m^3)

Δ P = Pressure rise (bar)

r i = nominal inner radius of the pipe (mm)

t = nominal pipe thickness(mm)

A = isothermal compressibility value for water at the pressurization temperature in the P range (bar_{-1}) x 10^6.

(Refer water compressibility factor vs pressure and temperature chart). For temperature above 30°C the values may be extrapolated.

K = a dimensionless coefficient that is equal to a value of 1.02 for longitudinally welded pipe.

12.2 The pressure change due to a water temperature change shall be calculated by the following formula:

$$\Delta P = \frac{B}{0.884\ r\ i/\ t + A}\ \Delta T$$

Where,

ΔP = pressure change resulting from a temperature change (bar)

ΔT algaebrical difference between water temperature at the beginning of the test and water temperature as measured at the end of the test (°C).

B = value of the difference between the thermal expansion of water at the pressure and temperature as measured at the end of the test and that of steel ($°C^{-1}$) x 10^6

(Refer table – A)

A = Isothermal compressibility value of water as estimated at the pressure and temperature values obtained at the end of test (bar^{-1}) x 10^6 (Refer Figure 1)

r i = nominal inner radius of the pipe (mm).

t = nominal thickness of pipe (mm).

13.0 PRECAUTIONS DURING THE TEST

In addition to all that has been expressly described in the procedures for carrying out the tests, the following additional requirements shall be complied with:

13.1 Provision shall be made for the installation of no-admittance signs to unauthorized personnel from the roads to the R.O.W.

13.2 Signs stating "PIPE UNDER TEST-KEEP OFF" with local language translation shall be placed where the pipeline is uncovered, and particularly where the provisional traps and stations are located. Such areas shall be suitably fenced in such a way as to prevent access of unauthorized personnel. No unauthorized personnel shall be closer than 40 m to the pipeline or equipment under test.

13.3 Provisional scraper traps shall be installed in compliance with methods and suitable locations so that their rupture cannot cause any injuries to the personnel or third parties.

13.4 The test station shall be placed in such a location as to prevent it from being affected by a catastrophic failure in the test head.

13.5 Once dewatering is over, the sectionalizing valves and other valve assemblies tested previously, shall be installed at locations shown in the drawings and in accordance with the procedures contained in the relevant specifications. All thermocouple installed in the pipeline shall be removed and damaged corrosion coating shall be repaired using COMPANY approved materials and procedure.

14.0 PRESERVATION OF PIPELINE

When so stated in the CONTRACT, to preserve/conserve the pipeline for a specified duration, CONTRACTOR shall completely fill the pipeline with water, with sufficient quantity of corrosion inhibitors depending upon quality of water and the period of conservation, at a pressure to be agreed upon with the COMPANY at a later stage. CONTRACTOR shall obtain necessary approval from the COMPANY of the procedure and the type and quantity of the inhibitors used before commencement of the works.

TABLE - A

^{0}C Bar	1	2	3	4	5	6	7	8
0.981	-98.62	-79.89	-61.81	-44.34	-27.47	-11.14	+4.66	+19.98
10	-95.55	-76.94	-58.99	-41.65	-24.89	-8.67	+7.02	+22.23
20	-92.15	-73.68	-55.86	-38.64	-22.01	-5.92	+9.65	+24.74
30	-88.74	-70.40	-52.72	-35.63	-19.14	-3.16	+12.29	+27.26
40	-85.32	-67.12	-49.58	-32.62	-16.24	-0.41	+14.93	+29.78
50	-81.90	-63.84	-46.43	-29.60	-13.36	+2.36	+17.57	+32.31
60	-78.47	-60.55	42.27	-26.58	-10.46	+5.15	+22.89	+34.85
70	-75.03	-57.25	-40.10	-23.54	-7.56	+7.92	+22.89	+37.39
80	-71.60	-53.96	-36.94	-20.51	-4.65	+10.70	+25.55	+39.94
90	-68.16	-50.66	-33.77	-17.47	-1.73	+13.50	+28.23	+42.50
100	-64.72	-47.35	-30.60	-14.43	+1.18	+16.29	+30.90	+45.05
110	-61.28	-44.05	-27.43	-11.38	+4.10	+19.08	+33.58	+47.61
120	-57.84	-40.74	-24.26	-8.34	+7.02	+21.88	+36.26	+50.18
130	-54.40	-37.44	-21.08	-5.29	+9.95	+24.68	+38.94	+52.75
140	-50.96	-34.13	-17.90	-2.25	+12.87	+27.49	+41.63	+55.32
150	-47.53	-30.83	-14.73	+0.80	+15.79	+30.29	+44.31	+57.89
160	-44.10	-27.53	-11.56	+3.85	+18.72	+33.10	+47.00	+60.46
170	-40.67	-24.23	-8.40	+6.89	+21.64	+35.90	+49.69	+63.04
180	-37.24	-20.94	-5.23	+9.94	+24.56	+38.70	+52.37	+65.62
190	-33.83	-17.65	-2.06	+12.98	+27.48	+41.51	+55.06	+68.19
200	-30.42	-14.37	+1.09	+16.01	+30.40	+44.30	+57.75	+70.77
210	-27.02	-11.09	+4.25	+19.04	+33.31	+47.10	+60.43	+73.34
220	-23.63	-7.82	+7.40	+22.06	+36.22	+49.90	+63.12	+75.90
230	-20.24	-4.56	+10.54	+25.08	+39.13	+52.69	+65.80	+78.48
240	-16.87	-1.30	+13.67	+28.10	+42.03	+55.48	+68.48	+81.05
250	-13.50	+1.94	+16.79	+31.11	+44.92	+58.26	+71.15	+83.61
260	-10.14	+5.17	+19.90	+34.12	+47.81	+61.04	+73.81	+86.81
270	-6.80	+8.39	+23.00	+37.11	+50.69	+63.80	+76.48	+88.73
280	-3.48	+11.60	+26.11	+40.09	+53.56	+66.57	+79.14	+91.29
290	-0.17	+14.80	+29.19	+43.07	+56.43	+69.33	+81.78	+93.83
300	+3.13	+17.98	+32.27	+46.03	+59.29	+72.06	+84.83	+96.38

DIFFERENCE BETWEEN THE WATER THERMAL EXPANSION FACTOR AND THE STEEL THERMAL EXPANSION FACTOR ($^0C^{-1}$) (10^{-6})

TABLE - A

^{0}C Bar	9	10	11	12	13	14	15
0.981	+34.82	+4922	+63.20	+76.78	+89.99	+102.83	+115.34
10	+36.97	+51.26	+65.15	+78.64	+91.75	+104.51	+116.93
20	+39.36	+53.55	+67.33	+80.71	+93.72	+106.39	+118.71
30	+41.76	+55.84	+69.51	+82.79	+95.70	+108.26	+120.49
40	+44.18	+58.14	+71.70	+84.87	+97.68	+110.14	+122.28
50	+46.60	+60.45	+73.90	+86.96	+99.68	+112.04	+124.07
60	+49.02	+62.76	+76.10	+89.07	+102.67	+113.93	+125.88
70	+51.44	+65.08	+78.32	+91.17	+103.68	+115.84	+127.69
80	+53.88	+67.40	+80.53	+93.29	+105.69	+117.76	+129.50
90	+56.32	+69.73	+82.75	+95.41	+107.70	+119.67	+131.32
100	+58.77	+72.07	+84.98	+97.53	+109.73	+121.59	+133.15
110	+61.21	+74.41	+87.22	+99.66	+111.75	+123.52	+134.98
120	+63.67	+76.74	+89.45	+101.79	+113.79	+125.46	+136.82
130	+66.12	+79.09	+91.69	+103.93	+115.83	+127.39	+138.67
140	+68.58	+81.45	+93.93	+106.07	+117.67	+129.34	+140.51
150	+71.05	+83.80	+96.18	+108.21	+119.90	+131.20	+142.37
160	+73.51	+86.15	+18.43	+110.36	+121.96	+133.74	+144.22
170	+75.97	+88.51	+100.68	+112.51	+124.01	+135.19	+146.08
180	+78.44	+90.87	+102.94	+114.66	+126.06	+137.15	+147.94
190	+80.91	+93.23	+105.19	+116.82	+128.12	+139.11	+149.81
200	+83.37	+95.59	+107.45	+118.97	+130.17	+141.07	+151.68
210	+85.84	+97.95	+109.71	+121.13	+132.24	+143.03	+153.55
220	+88.30	+100.31	+111.97	+123.29	+134.29	+144.99	+155.42
230	+90.67	+102.67	+114.23	+125.45	+136.36	+146.96	+157.30
240	+93.22	+105.03	+116.48	+127.60	+138.42	+148.93	+159.18
250	+95.69	+107.39	+118.74	+129.76	+140.48	+150.90	161.05
260	+98.14	+109.74	+121.00	+131.92	+142.54	+152.87	+162.93
270	+100.60	+112.10	+123.25	+134.08	+144.61	+154.84	+164.81
280	+103.05	+114.44	+125.50	+136.24	+146.67	+156.84	+166.69
290	+105.50	+116.79	+127.75	+138.39	+148.73	+158.78	+168.57
300	+107.94	+119.13	+130.00	+140.54	+150.79	+160.75	+170.45

DIFFERENCE BETWEEN THE THERMAL EXPANSION FACTOR THE STEEL THERMAL EXPANSION FACTOR (^{0}C $^{-1}$) (10 $^{-6}$)

TABLE - A

^{0}C Bar	16	17	18	19	20	21	22	23
0.981	+127.52	+139.41	+151.00	+162.31	+173.37	+184.18	+194.75	+205.08
10	+129.02	+140.83	+152.36	+163.58	+174.56	+185.30	+195.79	+206.07
20	+130.71	+142.42	+153.85	+165.00	+175.90	+186.55	+196.96	+207.16
30	+132.40	+144.02	+155.35	+166.42	+177.23	+187.80	+198.14	+208.26
40	+134.10	+145.62	+156.87	+167.85	+178.58	+189.07	+199.33	+209.37
50	+135.80	+147.24	+158.39	+169.85	+179.93	+190.34	+200.52	+210.49
60	+137.51	+148.86	+159.92	+170.73	+181.29	+191.62	+201.72	+211.61
70	+139.22	+150.49	+161.46	+172.18	+182.66	+192.91	+202.93	+212.74
80	+140.95	+152.11	+163.00	+173.64	+184.03	+194.20	+204.14	+213.88
90	+142.67	+153.75	+164.56	+175.10	+185.41	+195.50	+205.36	+215.03
100	+144.42	+155.40	+166.11	+176.58	+186.80	+196.80	+206.59	+216.17
110	146.15	+157.04	+167.66	+178.05	+188.20	+198.12	+207.82	+217.33
120	+147.90	+158.70	+169.24	+179.54	+189.59	+199.44	+209.06	+218.49
130	+149.65	+160.36	+170.81	+181.02	+191.00	+200.75	+210.31	+219.66
140	+151.40	+162.03	+172.39	+182.51	+192.41	+202.09	+211.56	+220.84
150	+153.16	+163.70	+173.98	+184.00	+193.82	+203.42	+212.81	+222.02
160	+154.93	+165.37	+175.56	+185.51	+195.24	+204.76	+214.08	+223.20
170	+156.69	+167.05	+177.15	+187.02	+196.66	+206.10	+215.34	+224.39
180	+158.47	+168.73	+178.75	+188.53	+198.09	+207.45	+216.61	+225.55
190	+160.24	+170.42	+180.35	+190.05	+199.52	+208.80	+217.89	+226.79
200	+162.01	+172.10	+181.95	+191.57	+200.97	+210.16	+219.17	+227.99
210	+163.80	+173.80	+183.55	+193.09	+202.40	+211.53	+220.46	+229.20
220	+165.58	+175.43	+185.16	+194.62	+203.85	+212.89	+221.74	+230.41
230	+167.36	+177.19	+186.78	+196.14	+205.30	+214.26	+223.04	+231.63
240	+169.16	+178.89	+188.39	+197.68	+206.75	+215.63	+224.33	+232.85
250	+170.94	+180.59	+190.01	+199.21	+208.20	+217.00	+225.63	+234.08
260	+172.73	+182.30	+191.63	+200.75	+209.66	+218.40	+226.93	+235.31
270	+174.53	+184.00	+193.25	+202.29	+211.12	+219.77	+228.24	+236.54
280	+176.32	+185.70	+194.88	+203.83	+212.59	+221.16	+229.55	+237.77
290	+178.11	+187.42	+196.50	+205.37	+214.05	+222.54	+230.86	+239.01
300	+179.90	+189.13	+198.13	+206.92	+215.51	+223.93	+232.18	+240.26

DIFFERENCE BETWEEN THE WATER THERMAL EXPANSION FACTOR AND THE STEEL THERMAL EXPANSION FACTOR ($^0C^{-1}$) (10^{-6})

TABLE -A

^{0}C Bar	24	25	26	27	28	29	30
0.981	+215.22	+215.14	+234.88	+244.41	+253.79	+263.00	+272.03
10	+216.13	+225.99	+235.66	+245.13	+254.44	+264.59	+272.57
20	+217.15	+226.94	+236.53	+245.94	+255.18	+264.27	+273.18
30	+218.18	+227.88	+237.41	+246.75	+255.93	+264.95	+273.80
40	+219.21	+228.85	+238.30	+247.58	+256.69	+265.64	+274.42
50	+220.25	+229.82	+239.20	+248.40	+257.45	+266.33	+275.07
60	+221.30	+230.79	+240.11	+249.24	+258.22	+267.04	+275.70
70	+222.35	+231.78	+241.02	+250.08	+258.99	+267.75	+276.35
80	+223.42	+232.77	+241.94	+250.93	+259.78	+248.47	+277.01
90	+224.48	+233.76	+242.87	+251.79	+260.57	+269.19	+277.66
100	+225.56	+234.76	+243.79	+252.66	+261.36	+269.92	+278.33
110	+226.64	+235.78	+244.73	+253.53	+262.17	+270.77	+279.01
120	+227.73	+236.79	+245.68	+254.40	+262.98	+271.41	+279.69
130	+228.82	+237.81	+246.63	+255.28	+263.69	+272.16	+280.38
140	+229.92	+238.84	+247.59	+25618	+264.62	+272.92	+281.08
150	+231.03	+239.87	+248.55	+257.07	+265.44	+273.69	+281.78
160	+232.14	+240.91	+249.52	+257.97	+266.28	+274.46	+282.49
170	+233.26	+241.96	+250.49	+258.88	+267.12	+275.23	+283.20
180	+234.38	+243.01	+251.47	+259.79	+267.97	+276.01	+283.92
190	+235.51	+244.06	+252.46	+260.71	+268.82	+276.80	+284.64
200	+236.64	+245.12	+253.45	+261.63	+269.67	+277.59	+285.37
210	+237.77	+246.18	+254.45	+262.50	+270.54	+278.39	+286.11
220	+238.91	+247.26	+255.45	+263.49	+271.40	+279.19	+286.85
230	+240.06	+248.33	+256.46	+264.43	+272.28	+280.00	+287.59
240	+241.21	+249.41	+257.46	+265.37	+273.16	+280.82	+288.35
250	+242.36	+250.49	+258.48	+266.31	+274.04	+281.63	+289.11
260	+243.52	+251.58	+259.49	+267.27	+274.92	+282.46	+289.86
270	+244.68	+252.66	+260.52	+268.23	+275.82	+283.29	+290.64
280	+245.84	+253.76	+261.54	+269.18	+276.71	+284.12	+291.40
290	+247.01	+254.86	+262.57	+270.15	+277.61	+284.95	+292.18
300	+248.18	+255.96	+263.60	+271.11	+278.51	+285.79	+292.95

DIFFERENCE BETWEEN THE WATER THERMAL EXPANSION FACTOR AND THE STEEL THERMAL EXPANSION FACTOR ($^0C^{-1}$) (10^{-6})

Rev. : 0
Edition : 1

SPECIFICATION
FOR
REPAIR OF PIPELINE CORROSION COATING

SPECIFICATION NO.: MEC/S/05/21/08

(OIL & GAS SBU)
MECON LIMITED
DELHI 110 092

CONTENTS

SL.NO.	DESCRIPTION
1.	SCOPE
2.	MATERIAL AND EQUIPMENT
3.	APPLICATION PROCEDURE
4.	INSPECTION/ TEST
5.	HOLIDAY INSPECTION
6.	DOCUMENTATION

1.0 **SCOPE** :

This specification covers the minimum requirement of material and equipment, installation procedure and inspection of repair of damaged polyethylene coatings on steel pipes.

1.1 The repair shall be carried out using repair patch made of radiation crosslinked Polyolefin backing, coated on the inside with semi-crystalline thermoplastic Adhesive and filler mastic

1.2 The repair patch shall have thermal indicators to ensure correct heat is being applied during application.

2.0 MATERIAL AND EQUIPMENT

2.1 CONTRACTOR shall supply all ,equipment and manpower required for a skillful and adequate application in the field in accordance with the specification.

2.2 The repair material shall be :

- Repair patch shall be cross linked polyolefin with semi-crystalline thermoplastic adhesive (PERP 80 patch make of Covalence Raychem or equivalent).
- Filler mastic : PERPFILLER of make Covalence Raychem or equivalent.
- PERP melt stick of make Covalence Raychem or equivalent.
- Certified by DIN to meet the requirement of EN12068 stress class CHT 80.

2.3 The material shall not be older than their period of validity at the time of Application by CONTRACTOR. Deteriorated/decomposed materials shall not be used.

2.4 Material shall be stored in sheltered storages in the manufacturer's original packing and away from direct sunlight and in accordance with manufacturer's recommendations.

3.0 **APPLICATION PROCEDURE**

The application procedure to be followed for Holiday type of damage shall be in accordance with manufacturer's instructions and minimum requirements specified below whichever is more stringent.

Preparation : Remove coating from damaged area with knife, scraper or power brush. Scrap off the damaged area and adjacent coating to remove oil, grease, ruse dirt and moisture.

Preheating : Preheat the exposed bare metal surface to about 80°C and adjacent pipe coating to about 60°C with a torch moved back and forth over the surface.

Application of the Filler : Plastic filler shall be applied to all exposed metal surface. The mastic is heated and smoothed down with a paint scraper to cover all bare metal in a manner such that all entrapped air is removed.

Application of repair tape : Cut a patch from the tape in a manner such that it extends 50 mm beyond the damaged area, position it over the damaged area, heat until the temperature sensitive paint on the outside of the patch changes colour. It shall be smoothed down to confirm with the contour of lap, and shall be freed of any air bubbles or wrinkles.

For cosmetic type of defects such as minor gauging tearing, scratches which do not indicate holiday during holiday inspection, following procedure shall be adopted :

The defect area shall be roughened to remove loose polyethylene coating, oil grease, dirt etc.

This shall be followed by application of repair patch as described above.

4.0 INSPECTION, TEST

A visual inspection shall be carried out for the following :

- Mastic extrusion on ends of the patch shall be examined.
- There shall be no sign of punctures or pin holes or bend failure. The external appearance of the patch shall be smooth, free from dimples, air entrapment or void formation.
- The entire repair patch shall have changed colour uniformly.

5.0 HOLIDAY INSPECTION

- The holiday detector used shall be checked and calibrated easily with an accurate D.C. Voltmeter. The detector electrode shall be in direct contact with the surface of coating to be inspected.

- The entire surface of the repaired section shall be inspected by means of a full circle holiday detector approved by company set to a DC Voltage of at least 25 KV. Inspection of repaired patch shall be conducted only after it has cooled below 50°C.

- No repaired point shall be covered or lowered in the trench until it has been approved by the COMPANY.

- Procedure qualification shall be carried out for repair patch. The value for peel strength to pipe surface and to factory coating carried out as per EN 12068 shall be 0.5 N/mm minimum at 60°C.

6.0 DOCUMENTATION

6.1 Prior to procurement of coating repair materials, Contractor shall furnish four copies of, but not limited to, the following for qualification of the Manufacturer and material :

i) Complete descriptive technical catalogs describing the materials offered alongwith samples of repair coating materials, its properties and installation instruction as applicable specifically to the project.

ii) Test certificate and results of previously conducted tests from independent inspection agency.

iii) Reference list of previous supplies of the similar material indicating the project details such as diameter, quantity, service conditions, year of supply, project name, contact person and feed back on performance.

Once the Company's approval has been given, any change in material or Manufacturer shall be notified to Company, whose approval in writing of all changes shall be obtained before the materials are manufactured.

6.2 Prior to shipment of materials from the Manufacturer's works. Contractor shall furnish six copies of the following :

i) Test Certificates for each batch of materials.
ii) Specific installation instruction with pictorial illustrations.
iii) Specific storage and handling instructions.

6.3 All documents shall be in English Language only.

TECHNICAL SPECIFICATION
FOR
PRE-COMMISSIONING AND COMMISSIONING

TS NO.: MEC/05/28/M/000/1093

(OIL & GAS SBU)
MECON LIMITED
DELHI 110 092

CONTENTS

SL. NO.	DESCRIPTION
1.0	INTRODUCTION
2.0	RESPONSIBILITY OF CONTRACTOR
3.0	SCOPE OF WORK
4.0	DOCUMENTATION
5.0	SPARES AND CONSUMABLES
6.0	SAFETY

ANNEXURE – I : FORMAT FOR BIODATA OF KEY PERSONNEL FOR COMMISSIONING

ANNEXURE – II : QUESTIONNAIRE

ANNEXURE – III : FORMAT TO BE USED DURING PRE-COMMISSIONING AND COMMISSIONING (TOTAL 5 FORMATS)

F O R M A T – I : INTIMATION REGARDING SYSTEM COMPLETION

F O R M A T - II : CHECKLIST

F O R M A T - III : READY FOR PRE-COMMISSIONING CERTIFICATE

F O R M A T – IV : READY FOR COMMISSIONING CERTIFICATE

F O R M A T - V : COMPLETION OF COMMISSIONING CERTIFICATE

1.0 INTRODUCTION

This specification covers the minimum technical requirements for:

i) Pre-commissioning activities consists of:

- Carrying out pre-commissioning checks of the underground pipeline system including above ground piping at dispatch station and at receipt stations, Sectionalizing Valve (SV) stations and tap-off / hook-up piping.
- Dewatering of the pipeline.
- Flushing and dry air blowing of underground & above ground piping at dispatch and receipt stations, SV stations and tap-off/ hook–up point.
- Swabbing of pipeline.
- Preparation of detailed commissioning procedures

ii) Commissioning activities consisting of Drying, Inertisation, Gas-in/ Commissioning, stabilization and 72 hours run of all the pipe lines and facilities mentioned in (i).

Bidder, along with his bid documents, is required to submit the following:

- Execution plan and method statement for pre-commissioning and commissioning activities.
- Past experience of pre-commissioning and commissioning activities carried out for a similar pipeline system / network.
- Plan to engage an agency / subcontractor for these activities (if envisaged).
- Organization charts of bidder's proposed pre-commissioning and commissioning team indicating the positions with the required qualifications and experience.
- Bio datas of Key personnel comprising the commissioning team along with their contact nos. In case the member of commissioning team as mentioned in the offer is not available at the actual time of commissioning then the contractor shall ensure a replacement with equivalent qualification & experience. The format of bio data is enclosed as **Annexure-I**.
- Clause wise list of deviations, if any, from this technical specification. In the absence of this, it shall be considered that the bidder has no deviation.
- Questionnaire as given in **Annexure-II**.

2.0 RESPONSIBILITY OF CONTRACTOR

The contractor shall be responsible for all the pre-commissioning and commissioning activities that need to be carried out for the pipeline system.

2.1 Pre-commissioning

In order to execute and perform pre-commissioning activities, the contractor shall be responsible for (but not limited to):

- Carrying out pre-commissioning checks of the underground pipeline system including above ground piping at dispatch station and at receipt stations, Sectionalizing Valve (SV) stations and tap-off / hook-up piping.
- Dewatering of the pipeline.
- Flushing and dry air blowing of underground & above ground piping at dispatch and receipt stations, SV stations and hook–up point.
- Swabbing of pipeline.
- Low pressure leak check (with air) for the aboveground section of the pipelines.
- Supply and supervision of manpower for pre-commissioning.
- Supply and operation of machinery & equipment for pre-commissioning.
- Supply and use of materials and consumables as required for the pre-commissioning activities.
- Design and supply all temporary line connections, pig launcher/receiver, valves, instruments, manpower etc. as required during various operations.
- Preparation of detailed pre-commissioning procedures, activity schedules, bar charts, schemes etc. This shall include preparation of detailed procedures for dewatering, flushing, swabbing and low pressure leak check and shall address the sequence and methodology describing all operations, data on materials, equipment, instruments, consumables, communication systems, necessary calculations, detailed time schedule and organization chart.
- All necessary work to perform the job successfully including all modifications that would be required.

The contractor shall demonstrate to the COMPANY (for COMPANY's approval) the successful completion of all of the above-mentioned activities.

In the event of any detail, which is not fully addressed, contractor should warrant that work shall be performed in accordance with the relevant codes, Company's specifications and the best recognized Engineering guidelines and practices being followed in the on-shore pipeline industry.

2.2 Drying, Inertisation, Gas-in / Commissioning, stabilization and 72 hours run

In order to execute and perform commissioning related activities, the contractor shall be responsible for (but not limited to):

- Drying of the underground pipeline and above ground piping system at dispatch and receipt stations, above ground piping system at SV stations and hook-up / tap-off points to a water dew point of –8 °C at atmospheric pressure, and maintain this dew point in the pipeline, till inertisation and gas-in activities commence.

- Commissioning checks including Safety review prior to start of commissioning activities to achieve 'Ready for commissioning' status for underground pipeline and above ground piping system at dispatch and receipt stations, above ground piping system at SV stations and hook-up / tap-off points.
- Inertisation of the pipeline system including above ground piping system at dispatch and receipt stations, above ground piping system at SV stations and hook-up / tap-off points.
- Gas-in activities including pressurization, carrying out high pressure leak checks and establishment of flows in the pipeline system including above ground piping at dispatch and receipt stations, SV stations, IP station and hook-up points.
- Stabilization and 72 hours run of the pipeline system.
- Supply and supervision of manpower for commissioning.
- Supply and operation of machinery & equipment for commissioning.
- Supply and use of materials and consumables as required for the commissioning activities.
- Design and supply all temporary line connections, pig launcher/receiver, valves, instruments, manpower etc. as required during various operations.
- Preparation of detailed commissioning procedures, activity schedules, bar charts, schemes etc. This shall include preparation of detailed procedures for drying, inertisation, gas-in / commissioning operations, high pressure leak check operations, pressurization, establishing flows and 72 hours run of the pipeline system, and shall address the sequence and methodology describing all operations, data on materials, equipment, instruments, consumables, communication systems, necessary calculations, detailed time schedule and organization chart.
- Ensuring all communication facilities are in place and in proper working condition prior to start of commissioning activities of the pipeline system.
- All necessary work to perform the job successfully including all modifications that

would be required.

The contractor shall demonstrate to the COMPANY (for COMPANY's approval) the successful completion of all of the above-mentioned activities.

In the event of any detail, which is not fully addressed, contractor should warrant that work shall be performed in accordance with the relevant codes, Company's specifications and the best recognized Engineering guidelines and practices being followed in the on-shore pipeline industry.

2.3 Mechanical Completion

Mechanical Completion of system shall mean completion of underground / aboveground pipeline system and station work including pre-commissioning along with ECP of U/G pipeline and make the system ready to start commissioning activities.

3.0 SCOPE OF WORK

The work to be performed by the Contractor as part of the pre-commissioning activities for the facilities outlined in paragraphs (i) of Section-1.0 above and commissioning related activities for the facilities outlined in paragraphs (ii) of Section-1.0 above shall consist of the following:

3.1 Pre-commissioning activities

3.1.1 Pre-commissioning checks

Pre-commissioning checks shall be carried out for the pipeline system to ascertain that the pipeline system has been mechanically completed in all respects. These checks shall cover the pipelines including distribution network system, dispatch and receipt stations, I.P. stations, sectionalizing valve stations and the hook up points. The pre-commissioning checks shall include the following:

A) System Checks

The entire facilities shall be checked against the latest P&ID's, Engineering and Vendor drawings / documents and other design specifications. Any shortcomings observed shall be listed down in the form of punch lists and duly attended.

B) Checking of Field Instruments

All the field instruments like actuated valves, control valves, shutdown valves, transmitters, solenoid valves, shut down switches, alarms etc. shall be checked physically and also for their intended application by simulating the operating condition. It will also include checking of Different meters, gauges, action of

actuated valves, control valves, shutdown valves etc.

C) Survey of the Pipelines

This shall be performed to confirm that proper fittings/supports, cathodic protection system, route markets, warning signs, fencing around SV stations, crash barriers etc. have been installed along the pipeline.

D) Checking of Communication System

This is to check that there is proper communication with adequate back up power to ensure uninterrupted communication.

E) Checking of Electrical Distribution System

This is to ensure safety and also to ensure an uninterrupted power supply during startup and normal pipeline operation.

F) Checking of Instruments, Controls & Interlocks

This is to check that instrument controls and interlocks are functional as per the normal operating conditions.

G) Checking of Utilities

This is to check that utilities like power, nitrogen, UPS system, instrument air, etc. are available prior to start-up.

H) Any other checks as may be considered necessary.

3.1.2 Dewatering

3.1.2.1 General

Dewatering of a pipeline section shall be done subsequent to the hydro-test of the respective pipeline section. During the dewatering operation, the major quantity of hydro-test water shall be removed from the pipelines and distribution network. It is the responsibility of the contractor to develop suitable dewatering procedure and submit the same for Company's approval.

The disposal of the water shall be performed such that no harm is done to the environment and the Dewatering procedure should indicate this disposal methodology.

3.1.2.2 Operational requirements

The dewatering operation for the pipelines shall consist of a number of dewatering pig runs and dry air shall be used as propellant for pig trains.

Cup pigs shall be used and will be suitable for traversing the entire length of the pipelines / pipe segments being dewatered. Contractor shall ensure that all the pigs are designed to prevent damage to the pipeline's internal coating (if any).

The contractor shall propose the minimum speed and the backpressure of the pigs in order that continuous operation will be performed without the pig getting stuck. Contractor shall submit all the calculations regarding this procedure and a contingency plan for implementation in case the pigs get stuck.

Contractor shall provide a suitable compressor for oil-free air with sufficient capacity and pressure.

Upon arrival of the pigs at the receiving end, the Contractor in the presence of Company's representative shall remove the pigs without delay.

3.1.2.3 Flushing of aboveground piping

Flushing of above ground piping at dispatch and receipt stations, SV stations and hook-up / tap-off points shall be done with water to remove debris from within the piping and then with dry air to remove the residual amount of water from the aboveground piping.

3.1.2.4 Acceptance criteria

Before proceeding to the next stage of operations, Contractor shall ensure that bulk of the water has been removed from the pipeline system. Contractor shall specify when the dewatering phase (for the underground pipeline) and flushing and dry air blowing (for above ground piping) is finished and shall obtain approval of the company before proceeding to the next phase.

3.1.3 Swabbing

3.1.3.1 General

The swabbing operation, which shall be done subsequent to the dewatering operation, is meant to reduce the remaining water in the pipeline to acceptable condition and to ensure removal of free water left inside the pipeline prior to final drying, Inertisation and commissioning of the Pipeline system. This is done by driving number of foam pigs propelled by oil free compressed dry air, which can pick up free water in the pipeline. Hence for swabbing, air compressors of required capacity, after-coolers and dryers should be deployed by the contractor.

Contractor may suggest alternate methodology for Swabbing operation. The swabbing

activity is precursor for drying of the pipeline and is basically to reduce duration of drying.

The contractor shall submit the detailed procedure and the duration of the swabbing operation and obtain approval of the company before starting the operation.

3.1.3.2 Acceptance criteria

The Contractor shall ensure that swabbing operation is considered to be completed when it is considered that there is no free water left in the pipeline. This shall be subject to Company's approval.

3.1.4 Safety review prior to start of commissioning activities

A pre-startup safety review of the pipeline system including the underground pipeline and the above ground piping at dispatch and receipt stations, SV stations and hook-up / tap-of points shall be carried out by the Contractor before permitting entry of natural gas into the new pipeline facility. Company / Company's representative shall also participate in the pre-startup safety review.

3.2 Commissioning related activities

3.2.1 Drying

Before charging the line with gas, the contractor may propose to dry the pipeline either by super drying or vacuum drying or any other suitable technique as approved by Engineer-in-charge (EIC). Following specifications shall govern the drying procedures and shall be submitted for approval of the EIC.

3.2.1.1 **Vacuum Drying**

a) General

The contractor shall dry the underground pipeline and the above ground piping at dispatch and receipt stations, SV stations and hook-up / tap-off points with vacuum drying technique prior to charging natural gas.

Water vapour shall be evacuated from the pipeline by vacuum units alone or in combination with dry air or dry nitrogen vacuum purging as specified in the scope of work. The final dew point temp. of the dry pipeline shall be -8 °C, which is equivalent to a pressure of 3 mbar (absolute), unless otherwise specified in the scope of work.

Vacuum drying should consist of the following stages:

- pre-drying checks;
- one or more leak tests;
- pump-down;
- evaporation/evacuation, including vacuum purging(if applicable);
- soak test/acceptance test;

The size of the vacuum units should be sufficient to reduce the pressure in the pipeline to the vaporisation pressure during pump-down within typically 12 h to 36 h of commencement of the pump-down operation, depending on the length and diameter of the pipeline. Vacuum units having excessive capacity would draw down the pressure too rapidly, which could cause localised ice formation.

The Contractor shall prepare a theoretical pressure/ time graph each of the drying phases and submit it along with detailed work procedure for approval of PMC/CLIENT.

b) **Pre-drying checks**

Before commencement of vacuum drying the Contractor shall verify that:

- The pipeline has been isolated from other pipelines and piping by closing valves at the battery limit. As a precaution against possible “air-in” leaks through the battery limit valves, all valves immediately adjacent to the battery limit valves shall also be closed wherever possible;
- All pressure safety valves, actuator tappings etc. shall be isolated by closing the respective valves;
- All vent drain, utility connections, tapping valves shall be closed and ends shall be blind flanged;
- The blow down piping (if any) shall also be isolated by closing the respective valves;
- The bypass piping across the mainline valves at SV stations shall be isolated by closing all the by-pass valves;
- valves are designed for vacuum drying and have been placed in to the half open position;
- valve body bleeder parts are vacuum tight;
- Temporary connections, pig trap valves and pig trap end closure seals are able to withstand the prevailing vacuum pressure. If this is not the case, Contractor shall provide adequate seals for the vacuum drying operation and replace these seals by the permanent seals once the vacuum drying operation has been completed.

c) Leak tests

I. Low pressure leak check of aboveground station piping

The above ground station piping including all instrument impulse tubing shall be pressurised with air to a minimum pressure of 6 kg/cm^2. All flanged threaded and tubing joints shall be checked for leaks by soap solution.

II. Leak test of pipeline

The piping connecting the vacuum unit with the pipeline, including pig trap(s) and vacuum unit(s), shall be isolated from the pipeline and the pressure in the isolated

piping lowered to slightly above the theoretical evaporation pressure.

The vacuum unit shall be switched off and the isolated piping checked for leaks by soap solution. Leaks shall be cured by flange tightening etc.

The pipeline shall then be opened to the vacuum unit(s) and the pressure in the entire system reduced to a pressure of 50 mbar (abs) to 100 mbar (abs) for the final leak test. The pressure shall be maintained at this level and all other piping, such as at the pig trap system at the other end of the pipeline if vacuum drying is carried out from one end only, shall be checked for leaks. Leaks shall be cured as stated above.

After all leaks have been cured, where possible, the vacuum unit shall be turned off and isolated from the pipeline and the pressure in the pipeline and the associated pipework monitored for at least 1 hr. Pressure increases shall be recorded and plotted on a pressure/time chart. From the measured pressure increase, the total leak rate shall calculated. Curing of leaks shall be continued until the calculated total leak rate is less than 10 % of evacuation capacity of the vacuum units at the initial leak test pressure. The final in-leak rate shall be recorded for use when analysing the final soak test results

d) **Pump-down/ pull down**

The pressure in the pipeline shall then be reduced at a steady rate to a vacuum level of 40-50 torr (53- 67 mbar). Alternatively the contractor may reduce the pressure in the pipeline further to a level where the ambient temperature of the pipeline will cause the free water to boil and then eventually to evaporate. The approximate pressure value is calculated in advance but it is easily recognized at site by a fall in the rate of pressure reduction, which is noted from the plot of pressure against time.

A significantly shorter pump down time than that theoretically predicted could indicate freezing and shall be evaluated immediately. The pressure shall be kept at this level, and pig traps and piping inspected for vacuum tightness and any leaks cured.

e) **Evaporation/ evacuation**

As the pressure in the pipeline approaches the saturated vapour pressure at the pipeline's ambient temperature, the rate of vapour evolution will increase, resulting in a reduction in the rate of pressure decrease. During this phase, the pressure will remain at more or less constant level until all the free water has been converted into water vapour. The vaporisation pressure shall be maintained and water vapour evacuated by pumping until all residual water has evaporated. Once all the free water has evaporated from the pipeline, the rate of pressure decrease will increase.

Ice formation in the pipeline and associated fittings shall be avoided by control of the evacuation rate through the vacuum units. A vaporisation pressure plateau at a level markedly lower than expected or erratic pressure fluctuations during plateau are indications of ice formation.

Vaporisation and evacuation by pumping shall continue until the vapour pressure has reached the level that is equivalent to the dew point specified for the dry pipeline This pressure shall be maintained for at least 3 hrs to confirm that a stable balanced vacuum pressure is established throughout the pipeline. Evacuation shall then be stopped and a soak test carried out.

Vacuum purging with dry air or nitrogen at pressures in the range of 4 mbar (abs) to 10 mbar (abs) may be applied in addition to evacuation by pumping to reduce the time needed for conventional evaporation and water vapour evacuation. The rates and pressures are dependent on the performance curves of the vacuum equipment, as the aim is to increase the pressure in the pipeline to an efficient volume transfer level. If applied, purging and evacuation shall continue until the dew point at the vacuum unit is constantly below the dew point for a dry pipeline as specified in the scope of work while replacing at least twice the contents of the pipeline. Purging shall then be stopped, and the pressure reduced to 3 mbar (abs) and maintained at this level for at least 3 hrs to achieve stable conditions in the pipeline. A soak test shall then be performed.

f) **Soak test/acceptance test**

Soak test is carried out to ensure that all free water has been evaporated. All the equipment other than that required for pressure monitoring shall be temporarily isolated from pipeline for a period of at least 12 hrs and pressure is monitored at an interval of 1 hr.

Pressure monitoring shall be carried out by means of pressure gauges and recorders with range 0 mbar to 10 mbar, a reading division of 0.1 mbar and an accuracy of ± 1 % of the measured value.

Initially the pressure will rise as the higher pressure in the centre of the pipeline (or at the opposite end if a single vacuum plant is in operation) balances with that nearest to the vacuum plant. After this initial stabilisation, which should occur well below the evaporation plateau, the test shall be acceptable if the pressure remains more or less constant (+/-5% variation is acceptable) at 3 mbar. If this is not the case, the observed pressure increases must be due to further flashing-off of moisture vapour, indicating that additional drying is required.

3.2.2.2 Super drying

a) General

The pipeline shall be dried using super dry air or nitrogen. The contractor shall submit work procedure for super drying in line with the scope of work to Engineer-in-charge for approval prior to start of any activity.

The super drying operation shall follow within 48 hrs of swabbing. In case super

drying of the pipeline does not start within 48 hrs of completion of swabbing, then the swabbing shall be repeated again.

The drying medium to be used shall be as specified in the scope of work or as per the directions of Engineer-in-charge. Dry air or nitrogen drying shall be executed consecutively in the following phases:

- pigging;
- purging for drying; and
- Purging for acceptance testing.

The basis of this technique is to run a series of light weight foam pigs through the pipeline with super dry air or dry nitrogen. The pigs initially absorb large quantities of water and ensure that water in the pipeline is continually spread out in a thin film, thus facilitating evaporation into the dry air system. Where permanent pig- launcher and receivers are not available temporary traps must be connected to the line and the drying unit may then be connected to the pig launcher by flexible hoses of appropriate rating.

The sizing of the drying equipment and calculations of the time required for drying shall be based on a film thickness of the residual water of not less than 0.1 mm for internally uncoated pipes and not less than 0.05 mm for internally coated pipes. Air introduced into the pipeline during dry air drying shall have a dew point of at least 15 °C below the final dew point (-8°C) of the pipeline.

Nitrogen used during drying shall have a minimum dew point of -50 °C at atmospheric pressure.

b) **Pigging**

The pipeline shall be pigged with high sealing disc pigs driven by dry air or nitrogen in combination with water absorbing foam pigs having a large water absorption capacity (approximately 80 % of their body mass), high abrasion resistance and a density between 30 to 50 kg/m^3 as follows:

- the travelling speed of the foam pigs should not exceed 1.2 m/s;
- a back-pressure of at least 0.5 bar shall be maintained at the receiving end; and
- pigs in a pig train should be separated by at least 300 meters

Pigging shall continue until the dew point of the drying medium at the receiving end remains below the dew point specified in the scope of work and does not fluctuate by more than 3°C whilst replacing the content of the line by a pig.

c) **Purging For Drying**

After pigging, the pipeline should be purged with the drying medium with a minimum velocity of 3 m/s in the pipeline at the discharge end. Purging shall continue until the dew point at the discharge end remains below the specified dew

point whilst replacing twice the content of the pipeline at purging pressure.

d) **Purging For Acceptance Testing**

The difficulty in defining the acceptance criterion is that the dew point sampling at each end of the pipeline does not necessarily represent the actual dew point condition prevailing within the whole pipeline. This is because the dry air (or nitrogen) entering the pipeline performs extensive drying at the start of the pipeline and then becomes saturated. As the pressure falls off towards the end of the pipeline, the air (or nitrogen) is again able to absorb moisture. Thus the situation can arise where the beginning and the end of a pipeline are dry but the middle may still be wet, or at a higher dew point than the ends. It can be checked that the acceptance criterion has been met by means of the following procedure.

Upon completion of purging, the pipeline shall be blocked-in for a period of at least 12 hrs and at a pressure of 0.5 bar above the ambient pressure at all points along the pipeline. After this period the pipeline content shall be replaced at the lowest possible pressure and the dew point continuously measured at the discharge end.

Drying is complete when the dew point during acceptance purging remains below the final dew point (-8°C) specified for the pipeline whilst replacing the line content. Purging for drying shall recommence and the acceptance test shall be repeated until this requirement has been met.

Upon completion of the drying, the pipeline shall be blocked in at a pressure of 0.5 bar above the ambient pressure at any point along the pipeline.

e) Preservation after Drying

The Contractor shall increase the pressure in the pipeline with either dry air or dry nitrogen.
The requirements for preservation are as follows:
- the final pipeline pressure to be achieved at the end of the filling operation shall be 0.5 bar above the ambient pressure at any point along the pipeline, plus a margin allowing for the maximum possible ambient temperature fluctuation during the post pre-commissioning period;
- The dew point, pressure and temperature of the medium introduced into the pipeline shall be measured and recorded constantly at the inlet of the pipeline throughout the filling operation;
- Warning signs, in English and the local or working languages, such as "PIPELINE FILLED WITH NITROGEN" or "PIPELINE FILLED WITH DRY AIR" shall be provided and placed at block valve stations and pig trap systems.

3.2.2 Low Pressure leak check for aboveground piping

3.2.2.1 General

The aboveground piping sections of the pipeline system shall be checked for leaks at flange points of piping and equipment, instrument impulse tubing points etc. This shall be done by pressurizing the system piping / equipment with dry compressed air (for this purpose, oil free air compressors shall be used) and testing the system by means of soap solution for leaks.

The contractor shall submit the detailed procedure and the duration of the leak check operations and obtain approval of the company before starting the operation.

3.2.2.2 Acceptance criteria

The leak check operation shall be considered to be completed when the piping system / equipment is free of leaks when tested at a pressure of 6.0 Kg/cm^2 g. This shall be subject to Company's approval.

3.2.3 Ready for Commissioning

After completion of drying activities and safety review prior to startup, Contractor shall notify the Company that the systems associated with the pipeline system including the underground pipeline and the above ground piping at dispatch and receipt stations, SV stations and hook-up / tap-of points are ready for gas-in/commissioning. 'Ready for commissioning status' shall be jointly reviewed by Company and Contractor and final clearance for start-up shall be given by the Company. After such joint assessment, if all the criteria are met, it will then be declared that the pipeline system has reached a stage of 'Ready for Commissioning'.

3.2.4 Inertisation

3.2.4.1 General

Contractor shall carry out inertisation of the entire pipeline system including the underground pipeline and the above ground piping at dispatch and receipt stations, SV stations and hook-up / tap-off points).

3.2.4.2 Operational requirements

During the Inertisation operation, the air left in the pipelines shall be replaced by nitrogen before admitting the natural gas into the pipeline for safe commissioning. The pipeline shall be inertized under vacuum condition after drying is achieved. For this, introduce nitrogen from one end of the pipeline maintaining vacuum from other end of the pipeline. After inertisation, gas charging shall be done into the pipeline.
For above ground piping at dispatch and receipt stations, SV stations and hook-up / tap-

of points, the piping shall be purged with nitrogen till the residual oxygen content in the piping is below 1% (vol/vol).

Nitrogen required for Inertisation purpose of the pipeline and aboveground piping shall be supplied by the contractor and should be of purity level 99.9% or above. Nitrogen gas at ambient temperatures (AND NOT LIQUID NITROGEN) and in completely vaporized and gaseous state shall be used as the inertising medium. In case the source of gaseous nitrogen is from liquid nitrogen tankers, then all precautions (including verification of the lowest tolerable temperature of all components in the system under commissioning) should be ensured.

The contractor shall submit the detailed procedure (in line with the above suggested method or any other acceptable one) and the duration of the inertisation operation and obtain approval of the company before starting the operation. Inertisation shall be followed immediately by charging of pipeline by natural gas.

3.2.4.3 Acceptance Criteria

Inertisation of the pipelines may be accepted to be complete when the required quantity of nitrogen has been introduced into the pipeline. The contractor has to ensure this condition for safe commissioning of the pipeline. For above ground piping at dispatch and receipt stations, SV stations and hook-up / tap-of points, the inertisation may be accepted to be complete when the residual oxygen content in the piping is below 1% (vol/vol).

3.2.5 Gas-in/Commissioning and Stabilization

3.2.5.1 General

Contractor shall carry out gas-in and commissioning activities of the entire pipeline system including the underground pipeline and the above ground piping at dispatch and receipt stations, SV stations and hook-up / tap-of points.

3.2.5.2 Operational requirements

During introduction of natural gas into the pipeline, natural gas shall be the motive fluid for driving the last pig of the nitrogen slug train. The pig train speed shall be maintained at 3 to 4 Km/hr. Maintenance of proper backpressure shall control pig train speed. Venting shall be controlled at the pig-receiving end to achieve the desired dynamics. In this fashion, slowly the desired portion of the pipeline shall be commissioned. Alternatively contractor may propose procedure for introduction of gas in pipeline under vacuum condition after inertisation with Nitrogen.

Subsequently, the pipeline system shall be slowly pressurized upto its operating

conditions and high pressure leak checks of the pipeline system at flange points, instrument points etc. shall be carried out with soap solution at regular intervals during the course of pressurization of the pipeline system. Once the pipeline system is pressurized at its operating conditions, normal gas flows shall be established in the pipeline system.

The contractor shall submit the detailed procedure (in line with the above suggested method or any other acceptable one) and the duration of the commissioning operation and obtain approval of the company before starting the operation.

Commissioning shall also include establishing the process control parameters first at turn down & then at design value stipulated in the process package along with supplementary instructions, if any, from Company / Company's Representative.

3.2.5.3 Acceptance Criteria

The system shall be considered to be commissioned successfully when the pipeline system including the underground pipeline and the above ground piping at dispatch and receipt stations, SV stations and hook-up / tap-of points is charged with natural gas, is free of leaks and run successfully at stable operating conditions with instrumentation / control systems process utilities and support systems taken on line for a minimum period of 72 hours.

The commissioning of pipeline system shall include commissioning of branch lines and associated facilities including auxiliary facilities and aboveground piping.

4.0 DOCUMENTATION

Contractor shall submit for approval of the Company, the complete description, detailed procedures and time schedule for all of the following activities:

- Pre-commissioning checks
- Dewatering
- Flushing
- Swabbing
- Drying
- Low pressure leak check of aboveground piping system with dry compressed air
- Inertisation
- Gas in and commissioning activities (including pressurization of pipeline system, high pressure leak check, establishment of flows and 72 hours run).

All these documents should be prepared covering all aspects of HSE, quality assurance and quality control plans.

Contractor shall ensure that his documents are related to “as-built” conditions of the pipeline and structure involved.

Documents shall also contain all safety plans, procedures, to be followed while carrying out the activities.

Upon successful completion of the work, contractor shall prepare a final report of the work which shall include necessary charts, diagrams, graphs, calculations, recordings, daily logs, measurements, details of the operation, etc. Report shall also include all certificates of calibration of instruments required, together with records of calibration performed at site prior to the start of any operation and the approved pre-commissioning and commissioning formats and check sheets.

5.0 SPARES AND CONSUMABLES

Contractor shall identify and arrange for supply of manpower, spares, tools, tackles and consumables as required for pre-commissioning and commissioning activities.

6.0 SAFETY

Contractor shall follow the safety practices during execution of pre-commissioning and Commissioning works as detailed in the scope of work. He shall also maintain and follow all safety practices equivalent or better than those being practiced by the industry during pre-commissioning and commissioning activities.

ANNEXURE - I

FORMAT FOR BIODATA OF KEY PERSONNEL FOR COMMISSIONING

1. PRPOSED POSITION IN ORGANISATION CHART:
2. NAME:
3. QUALIFICATION:
4. TOTAL YEARS OF EXPERIENCE IN PLANT OPERATION / COMMISSIONING:
5. DETAILS OF COMMISSIONING EXPERIENCE:

SL NO.	PROJECT DESCRIPTION	PLANT CAPACITY	LICENSOR	OWNER	YEAR OF COMMISS.	DURATION OF STAY AT SITE

ANNEXURE - II

QUESTIONNAIRE

CLAUSE NO.	DESCRIPTION OF CLAUSE	AGREED	NOT AGREED	REMARKS
1.0	SCOPE	[ ]	[ ]	
2.0	DEFINITIONS	[ ]	[ ]	
3.0	MANUFACTURER REPRESENTATIVE	[ ]	[ ]	
4.0	DOCUMENT FOR PRECOMMISSIONING AND COMMISSIONING	[ ]	[ ]	
5.0	OTHER REQUIREMENTS	[ ]	[ ]	
6.0	REVIEW/CHECKLISTING/INSPECTION/CO-ORDINATION	[ ]	[ ]	
7.0	COMMISSIONING	[ ]	[ ]	
8.0	CONSUMABLES	[ ]	[ ]	
9.0	SPECIAL REQUIREMENTS	[ ]	[ ]	
10.0	SAFETY	[ ]	[ ]	

NOTE:

1) PLEASE TICK THE RELEVANT BOX.
2) MENTION THE REASON & THE SUB-CLAUSE NOT AGREED IN THE REMARKS COLUMN.

ANNEXURE-III

FORMAT TO BE USED DURING PRE-COMMISSIONING AND COMMISSIONING

(TOTAL 5 FORMATS)

F O R M A T - I

INTIMATION REGARDING SYSTEM COMPLETION

PROJECT:_____ CUSTOMER:_____ UNIT:_____

Following system/sub-system has been mechanically completed in all respects with exceptions noted below. The system/sub-system can be taken up for checking and preparation of checklist.

SYSTEM NO.

SYSTEM DESCRIPTION:

EXCEPTIONS:

SIGNATURE DATE

CONTRACTOR'S CONSTRUCTION:

CO-ORDINATOR

The system is ready/ not ready for Check listing

OWNER/ PMC:

F O R M A T - II

CHECKLIST

PROJECT:_____CUSTOMER:_____UINT:_____

SYSTEM/SUB-SYSTEM_____

CHECKLIST TYPE **PRELIMINARY/FINAL**

SL.NO.	CHECKLIST ITEMS	REMARKS

SIGNATURE DATE

PMC :

OWNER:

F O R M A T - III

READY FOR PRE-COMMISSIONING CERTIFICATE

PROJECT:_____CUSTOMER:_____ UNIT:_____

SYSTEM/SUB-SYSTEM_____

This is to certify that the following Plant/system/sub- system as detailed below is completely installed and all the Checklist points are carried out except for minor details as given in the attached list.

DESCRIPTION ON PLANT/SECTION/SUB-SECTION_____

SIGNATURE DATE

CONTRACTOR'S CONSTRUCTION
CO-ORDINATOR:

CONTRACTOR'S COMMISSIONING
CO-ORDINATOR

The system is ready/ not ready for pre-commissioning

PMC :
OWNER:

F O R M A T - IV

READY FOR COMMISSIONING CERTIFICATE

PROJECT:_____CUSTOMER:_____ UNIT:_____

SYSTEM/SUB-SYSTEM_____

This is to certify that all the necessary pre-commissioning activities for the system/sub-system as detailed below have been completed and the system/sub-system is ready for commissioning except for the minor details as given below which will not effect the commissioning trial runs.

DESCRIPTION OF SYSTEM/SUB-SYSTEM_____

SIGNATURE DATE

CONTRACTOR'S COMMISSIONING:

CO-ORDINATOR SIGNATURE DATE

PMC: OWNER:

F O R M A T - V

COMPLETION OF COMMISSIONING CERTIFICATE

PROJECT:_____CUSTOMER:_____ UNIT:_____

SYSTEM/SUB-SYSTEM_____

This is to certify that the system/sub-system as detailed below has been successfully commissioned and is under operational control of Client's Production department. The minor items, which will not effect the normal operation of the system/sub-system, are given in the attached list.

DESCRIPTION OF SYSTEM/SUB-SYSTEM_____

SIGNATURE DATE

CONTRACTOR'S COMMISSIONING:
CO-ORDINATOR SIGNATURE DATE

PMC: OWNER:

15.0 Stud bolts, nuts & jackscrews shall be impact tested wherever specified in the material specification and also where the material specification is indicated as "CRYO". For" S.S. nuts and bolts minimum impact energy absorption shall be 27 Joules and test temperature shall be -196°C unless mentioned otherwise. For other materials impact energy and test shall be as per respective code.

16.0 Bolts / nuts of material of construction B7M / 2HM shall be 100% Hardness tested as per supplementary requirement S3 of ASTM A 193.

17.0 When specified as galvanized, the studs, m/c bolts and nuts shall be 'hot dip zinc coated' in accordance with requirements of 'class C' of 'ASTM A 153'. As an alternative, electro-galvanizing as per IS 1573, 'Service Grade Number 2' is also acceptable.

18.0 All Stud Bolts of Bolt diameter size 1" and above shall be provided with three nuts irrespective of whatever has been specified elsewhere in the MR.

Rev. : 0
Edition : 1

SPECIFICATION FOR HEALTH, SAFETY AND ENVIRONMENT (HSE) MANAGEMENT

SPECIFICATION NO.: MEC/S/05/21/65

(OIL & GAS SBU)
MECON LIMITED
DELHI 110 092

CONTENTS

SL. NO.	DESCRIPTION
1.0	SCOPE
2.0	REFERENCES
3.0	REQUIREMENT OF HEALTH, SAFETY & ENVIRONMENT (HSE) MANAGEMENT SYSTEM TO BE COMPLETED BY BIDDERS.
4.0	DETAILS OF HSE MANAGEMENT SYSTEM BY CONTRACTOR
5.0	RECORDS
	ANNEXURE-A ANNEXURE-B ANNEXURE-C ANNEXURE-D ANNEXURE-E

PREPARED BY:	CHECKED BY:	APPROVED BY:	ISSUE DATE :
(Shalini Singh)	(Sunil Kumar)	(A.K. Johri)	Feb. 2009

1.0 **SCOPE**

This specification establishes the Healthy, Safety and Environment (HSE) management requirement to be compiled with by the Contractors during construction.

This specification is not intended to replace the necessary professional judgement needed to design & implement an effective HSE system for construction activities and the contractor is expected to exceed requirements given in this specification.

Requirement stipulated in this specification shall supplement the requirement of HSE management given in relevant Act (S)/ legislations. General Condition of Contract (GCC) Special Condition of Contract (SCC) and Job Specifications. Where different documents stipulate different requirements, the most stringent shall be adopted.

2.0 **REFERENCES**

This document should be read in conjunction with following:

- General Conditions of Contract (GCC)
- Special Conditions of Contract (SCC)
- Building and other construction workers (regulation of employment and condition of service) Act, 1996
- Job Specifications
- Relevant IS Codes (refer Annexure-A)
- Reporting Formats (refer Annexure-B)
- Statutory requirements

3.0 **REQUIREMENT OF HEALTH, SAFETY & ENVIRONMENT (HSE) MANAGEMENT SYSTEM TO BE COMPLETED BY BIDDERS.**

3.1 **Management Responsibility**

3.1.1 The Contract should have a document HSE policy to cover commitment of the organization to ensure health, safety and environment aspects in their line of operations

3.1.2 The HSE management system of the Contractor shall cover HSE requirement including but not limited to what specified under clause 1.0 & 2.0 mentioned above

3.1.3 Contractor shall be fully responsible for planning and implementing HSE requirement to the satisfaction of the company. Contractor as a minimum requirement shall designate/deploy the following to co-ordinate the above:

No. Of workers deployed		
Up to 250	-	Designate one safety supervisor who will guide the workers from time to time, as well as impart training basic guidelines at least weekly once.

Above 250 & upto 500	-	Deploy one qualified and experienced safety Engineer/ Officer who will guide the workers from time to time as well as impart basic guideline & training at least weekly once. He / She shall possess a recognized Degree in any branch of engineering or technology or architecture and had a post qualification construction experience of minimum two years or possess a recognized Diploma in any branch of engineering or technology or Graduate in Science stream and had a post qualification construction experience of minimum five years.
Above 500 (for every 500 or less)	-	One additional safety engineer/Officer whose function will be as mentioned above

Contractor shall indemnify and hold harmless OWNER/ MECON & their representative's from any and all liabilities arising out of non fulfillment of HSE requirements.

Above is the minimum requirement and the Contractor shall ensure physical presence of a safety personnel at each place where Hot work permit is required. No work shall be started at site until above safety personnel are physically present at site. The contractor shall submit a safety organogram clearly indicating the lines of responsibility and reporting system. He shall furnish Bio-Data/Resume/Curriculum Vitae of the safety personnel he intends to mobilize, at least 1 month before the intended mobilization, for MECON/Owner's approval.

3.1.4 The Contractor shall ensure that the Health, Safety and Environment (HSE) requirements are clearly understood & faithfully implemented at all levels, at each and every site/ work place.

3.1.5 The Contractor shall promote and develop consciousness for Health, Safety and Environment among all personnel working for the Contractor. Regular awareness programs and fabrication shop/work site meeting shall be arranged on HSE activities to cover hazards involved in various operations during construction.

3.1.6 Arrange suitable first aid measures such as First Aid Box, trained personnel to give First Aid, Stand by Ambulance or Vehicle and install fire protection measures such as: adequate number of steel buckets with sand and water and adequate fire extinguishers to the satisfaction of OWNER/ MECON. In case the number of workers exceeds 500, the Contractor shall position an ambulance /vehicle on full time basis very close to the worksite.

3.1.7 The Contractor shall evolve a comprehensive planned and documented system for implementation and monitoring of the HSE requirements. This shall submitted to

OWNER & MECON for approval well in advance, prior to start of work. The monitoring for implementation shall be done by regular inspection and compliance to the observations thereof. The Contractor shall get similar HSE requirements implemented at his sub-contractor (s) work site/ Office. However, compliance of HSE requirement shall be the sole responsibility of the Contractor. Any review/ approval by OWNER/ MECON shall not absolve the Contractor of his responsibility/ liability in relation to all HSE requirements.

3.1.8 Non-Conformance on HSE by the Contractor (including his Sub-contractors) as brought out during review/ audit by MECON/ OWNER representative shall be resolved forthwith by Contractor. Compliance report shall be possibility submitted to MECON/ OWNER at the earliest.

3.1.9 The Contractor shall ensure participation of his Resident Engineer/Site-in-Charge in the Safety Committee/HSE Committee meetings arranged by OWNER/ MECON. The compliance of any observation shall be arranged urgently. Contractor shall assist OWNER/MECON to achieve the targets set by them on HSE during the project implementation.

The contractor shall ensure that his staff members & workers (permanent as well casual) shall not be in a state of intoxication during working hours and shall abide by any law relating to consumption & possession of intoxicating drinks or drugs in force. Awareness about local laws on this issue shall form part of the Induction Training.

The contractor shall ensure that all personnel working for him comply with No-smoking requirements of the owner as notified from time to time. Cigarettes, lighters, auto ignition tools or appliances shall not be allowed inside the plant complex. Smoking shall be permitted only inside smoking booths expressly designated & authorized by the Owner/MECON.

3.1.10 The Contractor shall adhere consistently to all provisions of HSE requirements. In case of non-compliance or continuous failure in implementation of any of HSE provisions; OWNER/ MECON may impose stoppage of work without any Cost & Time implication to Owner and/or impose a suitable penalty for non-compliance with a notice of suitable period, upto a cumulative limit of 1.0% (one percent) of Contract value with a ceiling of Rs. 10 lakhs.

0.2% (Zero decimal two percent) of the contract value for LSTK, EPC, EPCC or Package contracts with an overall ceiling of Rs. 1,00,00,000/- (Rupees one crore).

S. No.	Violation or HSE norms	Penalty Amount
1.	For not using personal protective equipment (Helmet, Shoes, Goggles, Gloves, Full body harness, Face shield, Boiler suit, etc.)	Rs. 250/- per day / item / person
2.	Working without Work Permit / Clearance	Rs.5,000/- per occasion

S. No.	Violation or HSE norms	Penalty Amount
3.	Unsafe electrical practices (not installing ELCB, using poor joints of cables, using naked wire without top plug into socket, laying wire / cables on the roads, electrical jobs by incompetent person, etc.)	Rs.3,000/- per item per day.
4.	Working at height without full body harness, using non-standard / rejected scaffolding and not arranging fall protection arrangement as required like Safety Nets.	Rs.1,000/ per case per day.
5.	Unsafe handling of compressed gas cylinders (No trolley, jubilee clips double gauge regulator, improper storage / handling).	Rs. 100/- per item per day
6.	Use of domestic LPG for cutting purpose.	Rs.1,000/- per occasion
7.	No fencing / barricading of excavated areas.	Rs.1,000/- per occasion
8.	Not providing shoring / strutting / proper slope and not keeping the excavated earth at least 1.5 M away from excavated area.	Rs.5,000/- per occasion
9.	Non display of caution boards, list of hospitals, emergency services available at work locations.	Rs.500/- per occasion
10.	Traffic rules violations like over speeding of vehicles, rash driving, wrong parking, not using seat belts, vehicles not fitted with reverse warning alarms.	Rs.1,000/- per occasion
11.	Absence of Contractor's top most executive at site in the safety meetings whenever called by MECON / Owner	Rs.1,000/- per occasion
12.	Failure to maintain safety records by Contractor Safety personnel.	Rs.1,000/- per month.
13.	Failure to conduct daily safety site inspection, HSE meeting and HSE audit at predefined frequencies.	Rs.1,000/- per occasion
14.	Failure to submit the monthly HSE report by 5th of subsequent month to Engineer-in-Charge.	Rs. 1,000/- per occasion and Rs. 100/- per day for further delay.
15.	Poor House Keeping	Rs.1,000/- per occasion
16.	Failure to report & follow up accident (including Near Miss) reporting system.	Rs. 10,000/- per occasion

S. No.	Violation or HSE norms	Penalty Amount
17.	Degradation of environment (not confining toxic spills oil / lubricants onto ground)	Rs.1,000/- per occasion
18.	Not medically examining the workers before allowing them to work at height, not providing ear muffs while allowing them to work in noise polluted areas, made them to work in air polluted areas without respiratory protective devices, etc.	Rs.1,000/- per occasion
19.	Violation of any other safety condition as per job HSE plan, work permit and HSE conditions of contract (using crowbar on cable trenches, improper welding booth, not keeping fire extinguisher ready at hot work site, unsafe rigging practices, non-availability of First-Aid box, etc.)	Rs.1,000/- per occasion
20.	Any violation not covered above.	To be decided by MECON / Owner

This penalty shall be in addition to all other penalties specified else where in the contract. The decision of imposing stoppage of work, its extent & monitory penalty shall rest with MECON/OWNER & binding on the Contractor.

3.1.11 All fatal accidents and other personnel accidents shall be investigated by a team of Contractor's senior personnel for root cause and recommend corrective and preventive actions. Findings shall documented and suitable actions taken to avoid recurrences shall be communicated to OWNER / MECON. OWNER / MECON shall have the liberty to independently investigate such occurrences and Contractor shall extend all necessary help and co-operation in this regard. MECON / Owner shall have to right to share the content of this report with the outside world.

3.2 **House Keeping**

3.2.1 Contractor shall ensure that a high degree of house keeping is maintained and shall ensure the followings:

a. All surplus earth and debris are removed/disposed off from the working site to identified location (s).

b. Unused/Surplus Cables Steel items and steel scrap lying scattered at different places within the working areas are removed to identified location (s).

c. All wooden scrap, empty wooden cable drums and other combustible packing materials shall be removed from work place to identified location(s).

d. Roads shall be kept clear and materials like pipes, steel, sand, boulders, concrete chips and bricks, etc. shall not be allowed in the roads to obstructs free movement of men & machineries.

e. Fabricated steel structurals, pipes & piping materials shall be stacked properly for erection.

f. Water logging on rods shall not be allowed.

g. No parking of trucks/ trolleys, cranes and trailors etc. shall be allowed on of roads, which may obstruct the traffic movements.

h. Utmost care shall be taken to ensure over all cleanliness and proper up keep of the working areas.

i. Trucks carrying sand, earth and pulverized materials etc. shall be covered while moving within the plant areas.

j. The contractor shall ensure that the atmosphere in plant area and on roads is free from particulate matter like dust, sand, etc. by keeping the top surface wet for ease in breathing.

k. At least two exits for any unit area shall be assured at all times.

3.3 **Healthy, Safety and Environment**

a) The Contractor shall provide safe means of access to any working place including provision of suitable and sufficient scaffolding at various stages during all operations of the work for the safety of his workmen, and OWNER/ MECON. Contractor shall ensure deployment of appropriate equipment and appliances for adequate safety and healthy of the workmen and protection of surrounding areas.

Contractor shall ensure identification of all Occupational Health, Safety & Environmental hazards in the type of work he is going to undertake and enlist mitigation measures. Contractor shall carry out Job Safety Analysis (JSA) specifically for high risk jobs like working at height & in confined space, deep excavations, radiography jobs, electrical installations, blasting operations, demolishing / dismantling activities, welding / gas cutting jobs and submit the findings to MECON / Owner. The necessary HSE measures devised shall be in place prior to start of an activity by the contractor.

b) The Contractor shall ensure that all their staff workers including their sub-Contractor (s) shall wear Safety Helmet and Safety shoes. Contractor shall also ensure use of safety belt, protective goggles, gloves etc. by the personnel as per jobs requirements. All these gadgets shall conform to relevant IS specification equivalent.

The Contractor shall ensure that all their staff, workers and visitors including their sub-contractor(s) have been issued (records to be kept) & wear appropriate PPEs like nape strap type safety helmets preferably with head & sweat band with ¾" cotton chin strap (made of industrial HDPE), safety shoes with steel toe cap and antiskid sole, full body harness (C∈ marked and conforming to EN361), protective goggles, gloves, ear muffs, respiratory protective devices, etc. All these gadgets shall conform to applicable IS Specifications / C∈ or other applicable international standards.

Owner may issue a comprehensive color scheme for helmets to be used by various agencies. The Contractor shall follow the scheme issued by the owner. All Safety / Fire personnel shall preferably wear red colour helmet so that workmen can approach them for guidance during emergencies.

For shot blasting, the usage of protective face shield and helmets, gauntlet and protective clothing is mandatory.

For offshore jobs/contracts, contractor shall provide PPEs (new) to MECON & Owner's personnel, at his (contractor's) cost. All personnel shall wear life jacket at all time.

An indicative list of HSE standards/codes is given under Appendix-A.

The contractor shall issue height permit for working at height after verifying and certifying the checkpoints as specified in the attached permit (Format No. HSE-6). He shall also undertake to ensure compliance to the conditions of the permit during the currency of the permit including adherence to personal protective equipments.

The permit shall be issued initially for one week or expected duration of an activity and extended further for the balance duration. This permit shall be applicable in areas where specific clearance from Owner's operation Deptt. / Safety Deptt. is not required. MECON field Engineers / Safety Officers / Area Coordinators may verify and counter sign this permit (as an evidence of verification) during the execution of the job.

In case work is undertaken without taking sufficient precautions as given in the permit, MECON Engineers may cancel the permit and stop the work till satisfactory compliance is arranged. Contractors are expected to maintain a register for issuance of permit and extensions thereof including preserving the used permits for verification during audits etc.

Contractor shall arrange (at his cost) and ensure use of Fall Arrester Systems by his workers. Fall arresters are to be used while climbing / descending tall structures. These arresters should lock automatically against the anchorage line, restricting free fall of the user. The device is to be provided with a double security opening system to ensure safe attachment or release of the user at

any point of rope. In order to avoid shock, the system should be capable of keeping the person in vertical position in case of a fall.

Contractor shall ensure that Full body harnesses conforming EN361 and having authorized CC marking is used by all personnel while working at height. The lanyards and life lines should have enough tensile strength to take the load of the worker in case of a fall. One end of the lanyard shall be firmly tied with the harnesses and the other end with life line. The harness should be capable of keeping the workman vertical in case of a fall, enabling him to rescue himself.

Contractor shall provide Roof Top Walk Ladders for carrying out activities on sloping roofs in order to reduce the chances of slippages and falls.

c) Contractor shall ensure that a proper Safety Net System shall be used at appropriate locations. The safety net shall be located not more than 30 feet (9.0 metres) below the working surface at site to arrest or to reduce the consequences of possible fall of persons working at different heights.

d) Contractor shall ensure that flash back arrestors conforming to BS:6158 or equivalent are installed on all gas cylinders as well as at the torch end of the gas hose, while in use. All cylinders shall be mounted on trolleys and provided with a closing key. The burner and the hose placed downstream of pressure reducer shall be equipped with Flash Back Arrester / Non Return Valve device. The hoses for acetylene and oxygen cylinders must be of different colours. Their connections to cylinders and burners shall be made with a safety collar. At end of work, the cylinders in use shall be closed and hoses depressurized. All welding machines shall have effective earthing. In order to help maintain good housekeeping, and to reduce fire hazard, live electrode bits shall be contained safely and shall not be thrown directly on the ground.

e) The Contractor shall assign to his workmen, tasks commensurate with their qualification, experience and state of health for driving of vehicles, handling and erections of materials and equipment's. All lifting equipments shall be tested certified for its capacity before use. Adequate and suitable lighting at every work place and approach there to shall be provided by the contractor before starting the actual work/ operation at night.

Contractor shall ensure installation of Safe Load Indicator (SLI) on all cranes (while in use) to minimize overloading risk. SLI shall have capability to continuously monitor and display the load on the hook, and automatically compare it with the rated crane capacity at the operating condition of the crane. The system shall also provide visual and audible warnings at set capacity levels to alert the operator in case of violations.

The contractor shall be responsible for safe operations of different equipments mobilized and used by him at the workplace like transport

vehicles, engines, cranes, mobile ladders, scaffoldings, work tools, etc.

f) Hazardous and/or toxic material such as solvent coating or thinners shall be stored in appropriate containers.

g) All hazardous materials shall be labeled with the name of the materials, the hazards associated with its use and necessary precautions to be taken.

The work place shall be checked prior to start of activities to identify the location, type and condition of any asbestos materials which could be disturbed during the work. In case asbestos material is detected, usage of appropriate PPEs by all personnel shall be ensured and the matter shall be reported immediately to MECON / Owner.

h) Contractor shall ensure that during the performance of the work all hazards to the health of personnel have been identified assessed and eliminated.

i) Chemical spills shall be contained & cleaned up immediately to prevent further contamination.

j) All personnel exposed to physical agents such as ionizing or non-ionizing radiation ultraviolet rays or similar other physical agents shall be provided with adequate shielding or protection commensurate with type of exposure involved. For ionizing radiation, requirements of Bhabha Atomic Research Centre (BARC)/ Atomic Energy Regulatory Board (AERB) shall be followed.

k) Where contract or exposure of hazardous materials could exceed limits or could otherwise have harmful affects, appropriate personal protective equipment's such as gloves, goggles, aprons, chemical resistant clothing and respirator shall be used.

l) Contractor shall ensure the following facilities at work sites:

I) A Crèche where 10 or more female workers are having children below the age of 6 years.

II) Reasonable Canteen facilities are made available at appropriate location depending upon site conditions.

m) Suitable facilities for toilet, drinking water, proper lighting shall be provided at site and labor camps, commensurate with applicable Laws/Legislation.

n) Contractor shall ensure storage and utilization methodology of material that are not detrimental to the environment. Wherever required Contractor shall ensure that only the environment friendly material are selected.

Emphasize on recycling of waste materials such as metals, plastics, glass, paper, oil & solvents. The waste that can not be minimized, reused or

recovered shall be stored and disposed of safely. In no way, toxic spills shall be allowed to percolate into the ground. The contractor shall not use the empty areas for dumping the wastes.

o) All person deployed at site shall be knowledgeable of and comply with the environmental laws, rules & regulation relating to the hazardous materials substance and wastes. Contractor shall not dump, release or otherwise discharge or dispose off any such materials without the authorization of OWNER/ MECON.

Suitable scaffoldings shall be provided to workmen for all works that cannot be safely done from the ground or from solid construction except such short period work that can be safely done using ladders. When a ladder is used, an extra workman shall be engaged for holding the ladder.

The contractor shall ensure that the scaffolds used during construction activities shall be strong enough to take the designed load. Owner / MECON reserves the right to ask the contractor to submit certification and or design calculations from his Engineering regarding load carrying capacity of the scaffoldings.

All scaffolds shall be inspected by a Scaffolding Inspector of the contractor. He shall paste a GREEN tag on each scaffold found safe and a RED tag on each scaffold found unsafe. Scaffolds with GREEN tag only shall be permitted to be used and RED ones shall immediately be removed from the site.

All electrical installations / connections shall be carried out as per the provisions of latest revision of following codes/standards, in addition to the requirements of Statutory Authorities and IE / applicable international rules & regulations:

- OISO SID 173 : Fire prevention & protection system for electrical installations
- SP 30 (BIS) : National Electric Code

All electrical installations shall be approved by the concerned statutory authorities.

- The contractor shall meet the following requirements:

  i) Ensure that electrical systems and equipment including tools & tackles used during construction phase are properly selected, installed, used and maintained as per provisions of the latest revision of the Indian Electrical / applicable international regulations.

  ii) Shall deploy qualified & licensed electricians for proper & safe installation and for regular inspection of construction power

distribution system / points including their earthing. A copy of the license shall be submitted to MECON / Owner for records. Availability of at least one competent licensed electrician shall be ensured at site round the clock to attend to the normal / emergency jobs.

iii) All switchboards / welding machines shall be kept in well-ventilated & covered shed. The shed shall be elevated to avoid water logging. No flammable materials shall be used for constructing the shed. Also flammable materials shall not be stored in and around electrical equipment / switchboard. Adequate clearances and operational space shall be provided around the equipment.

iv) Fire extinguishers and insulating mats shall be provided in all power distribution centers.

v) Temporary electrical equipment shall not be employed in hazardous area without obtaining safety permit.

vi) Proper house keeping shall be done around the electrical installations.

vii) All temporary installations shall be tested before energising, to ensure proper earthing, bonding, suitability of protection system, adequacy of feeders/cables etc.

viii) All welders shall use hand gloves irrespective of holder voltage.

ix) Multilingual (Hindi, English and local language) caution boards, shock treatment charts and instruction plate containing location of isolation point for incoming supply, name & telephone No. of contact person in emergency shall be provided in substations and near all distribution boards / local panels.

x) Operation of earth leakage device shall be checked regularly by temporarily connecting series test lamp (2 bulbs of equal rating connected in series) between phase and earth.

xi) Regular inspection of all installations (at least once in a month)

- The following features shall also be ensured for all electrical installations during construction phase by the contractor:

i) Each installation shall have a main switch with a protective device, installed in an enclosure adjacent to the metering point. The operating height of the main switch shall not exceed 1.5 M. The main switch shall be connected to the point of supply by means of armoured cable.

ii) The outgoing feeders shall be double or triple pole switches with fuses / MCBs. Loads in a three phase circuit shall be balanced as far as

possible and load on neutral should not exceed 20% of load in the phase.

iii) The installation shall be adequately protected against overload, short circuit and earth leakage by the use of suitable protective devices. Fuses wherever used shall be HRC type. Use of rewirable fuses shall be strictly prohibited. The earth leakage device shall have an operating current not exceeding 30 mA.

iv) All connections to the hand tools / welding receptacles shall be taken through proper switches, sockets and plugs.

v) All single phase sockets shall be minimum 3 pin type only. All unused sockets shall be provided with socket caps.

vi) Only 3 core (P+N+E) overall sheathed flexible cables with minimum conductor size of 1.5 mm^2 copper shall be used for all single phase hand tools.

vii) Only metallic distribution boxes with double earthing shall be used at site. No wooden boxes shall be used.

viii) All power cables shall be terminated with compression type cable glands. Tinned copper lugs shall be used for multistrand wires / cables.

ix) Cables shall be free from any insulation damage.

x) Minimum depth of cable trench shall be 750 mm for MV & control cables and 900 mm for HV cables. These cables shall be laid over a sand layer and covered with sand, brick & soil for ensuring mechanical protection. Cables shall not be laid in waterlogged area as far as practicable. Cable route markers shall be provided at every 25 M of buried trench route. When laid above ground, cables shall be properly cleated or supported on rigid poles of atleast 2 M high. Minimum head clearance of 6 meters shall be provided at road crossings.

xi) Under ground road crossings for cables shall be avoided to the extent feasible. In any case no under ground power cable shall be allowed to cross the roads without pipe sleeve.

xii) All cable joints shall be done with proper jointing kit. No taped / temporary joints shall be used.

xiii) An independent earthing facility should preferably be established within the temporary installation premises. All appliances and

equipment shall be adequately earthed. In case of armoured cables, the armour shall be bonded to the earthing system.

xiv) All cables and wire rope used for earth connections shall be terminated through tinned copper lugs.

xv) In case of local earthing, earth electrodes shall be buried near the supply point and earth continuity wire shall be connected to local earth plate for further distribution to various appliances. All insulated wires for earth connection shall have insulation of green colour.

xvi) Separate core shall be provided for neutral. Earth / Structures shall not be used as a neutral in any case.

xvii) ON/OFF position of all switches shall be clearly designated / painted for easy isolation in emergency.

The contractor shall identify all operations that can adversely affect the health of its workers and issue & implement mitigation measures.

For surface cleaning operations, sand blasting shall not be permitted even if not explicitly stated elsewhere in the contract.

To eliminate radiation hazard, Tungsten electrodes used for Gas Tungsten Arc Welding shall not contain Thorium.

Appropriate respiratory protective devices shall be used to protect workmen from inhalation of air borne contaminants like silica, asbestos, gases, fumes, etc.

Workmen shall be made aware of correct methods for lifting, carrying, pushing & pulling of heavy loads. Wherever possible, manual handling shall be replaced by mechanical lifting equipments.

For jobs like drilling / demolishing / dismantling where noise pollution exceeds the specified limit of 85 decibels, ear muffs shall be provided to the workers.

To avoid upper limb disorders and backaches, Display Screen Equipments' workplace stations shall be carefully designed & used with proper sitting postures. Power driven hand-held tools shall be maintained in good working condition to minimize their vibrating effects and personnel using these tools shall be taught how to operate them safely & how to maintain good circulation in hands.

The contractor shall arrange health check up for all the workers at the time of induction. Health check may have to be repeated if the nature of duty assigned to him is changed necessitating health check or doubt arises about his wellness. MECON / Owner reserve the right to ask the contractor to submit test reports.

Weather Protection

Contractor shall take appropriate measures to protect workers from severe storms, solar radiations, poisonous gases, dust, etc. by ensuring proper usage of PPEs like Sun glasses, Sun screen lotions, respirators, dust masks, etc. and rearranging / planning the construction activities to suit the weather conditions.

Communication

All persons deployed at the work site shall have access to effective means of communication so that any untoward incident can be reported immediately and assistance sought by them.

All health & safety information shall be communicated in a simple & clear language easily understood by the local workforce.

Unsuitable Land Conditions

Contractor shall take appropriate measures and necessary work permits / clearances if work is to be done in or around marshy areas, river crossings, mountains, monuments, etc.

Under Water Inspection

Contractor shall ensure that boats and other means used for transportation, surveying & investigation works shall be certified seaworthy by a recognized classification society. It shall be equipped with all life saving devices like life jackets, adequate fire protection arrangements and shall posses communication facilities like cellular phones, wireless, walkie-talkie. All divers used for seabed surveys, underwater inspections shall have required authorized license, suitable life saving kit. Number of hours of work by divers shall be limited as per regulations. MECON / Owner shall have the right to inspect the boat and scrutinize documents in this regard.

TOOL BOX MEETING (TBM)

Contractor shall conduct daily TBM with workers prior to start of work and shall maintain proper record of the meeting. A suggested format is given below. The TBM is to be conducted by the immediate supervisor of the workers.

TOOLBOX MEETING RECORDING SHEET

Date & Time		
Subject		
Presenter		
Hazards involved		
Precautions to be taken		
Worker's Name	Signature	Section
Remarks, if any		

The topics during TBM shall include

- Hazards related to work assigned on that day and precautions to be taken.
- Any forthcoming HSE hazards / events / instruction / orders, etc.

The above record can be kept in local language, which workers can read. These records shall be made available to MECON / Owner whenever demanded.

TRAINING

Contractor shall ensure that all his personnel possess appropriate training to carry out the assigned job safely. The training should be imparted in a language understood by them and should specifically be trained about

- Potential hazards to which they may be exposed at their workplace
- Measures available for prevention and elimination of these hazards

The topics during training shall cover, at the minimum;

- Education about hazards and precautions required
- Emergency and evacuation plan
- HSE requirements
- Fire fighting and First-Aid
- Use of PPEs
- Local laws on intoxicating drinks, drugs, smoking in force

Records of the training shall be kept and submitted to MECON / Owner whenever demanded.

For offshore and jetty jobs, contractor shall ensure that all personnel deployed have undergone a structured sea survival training including use of lifeboats, basket landing, use of radio communication etc. from an agency acceptable to Owner / MECON.

INSPECTION

The contractor shall carryout daily HSE inspection and record observations at a central location. These inspection records shall be freely accessible to Owner / MECON representatives. The contractor shall also assist Owner / MECON representatives during the HSE inspections conducted by them.

ADDITIONAL SAFETY REQUIREMENTS FOR WORKING INSIDE A RUNNING PLANT

As a minimum, the contractor shall ensure adherence to following safety requirements while working in or in the close vicinity of an operating plant :

a) Contractor shall obtain permits for Hot work, Cold work, Excavation and Confined Space from Owner in the prescribed format.

b) The contractor shall monitor, record and compile list of his workers entering the operational plant/unit each day and ensure & record their return after completing the job.

c) Contractor's workers and staff members shall use designated entrances and proceed by designated routes to work areas only assigned to them. The workers shall not be allowed to enter units' area, tanks area, pump rooms, etc. without work authorization permit.

d) Work activities shall be planned in such a way so as to minimize the disruption of other activities being carried out in an operational plant / unit and activities of other contractors.

e) The contractor shall submit a list of all chemicals / toxic substances that are intended to be used at site and shall take prior approval of the Owner.

f) Specific training on working in a hydrocarbon plant shall be imparted to the work force and mock drills shall be carried out for Rescue operations / First-Aid measures.

g) Proper barricading / cordoning of the operational units / plants shall be done before starting the construction activities. No unauthorized person shall be allowed to trespass. The height and overall design of the barricading structure shall be finalized in consultation with the Owner and shall be got approved from the Owner.

h) Care shall be taken to prevent hitting underground facilities such as electrical cables, hydrocarbon piping during execution of work.

i) Barricading with water curtain shall be arranged in specific/critical areas where hydrocarbon vapors are likely to be present such as near horton spheres or tanks. Positioning of fire tenders (from owner) shall also be ensured during execution of critical activities.

j) Emergency evacuation plan shall be worked out and all workmen shall be apprised about evacuation routes. Mock drill operations may also be conducted.

k) Flammable gas test shall be conducted prior to any hot work using appropriate measuring instruments. Sewers, drains, vents or any other gas escaping points shall be covered with flame retardant tarpaulin.

l) Respiratory devices shall be kept handy while working in confined zones where there is a danger of inhalation of poisonous gases. Constant monitoring of presence of Gas / Hydrocarbon shall be done.

m) Clearance shall be obtained from all parties before starting hot tapping, patchwork on live lines and work on corroded tank roof.

n) Positive isolation of line/equipment by blinding for welding/cutting/grinding shall be done. Closing of valve will not be considered sufficient for isolation.

o) Welding spatters shall be contained properly and in no case shall be allowed to fall on the ground containing oil. Similar care shall be taken during cutting operations.

p) The vehicles, cranes, engines, etc. shall be fitted with spark arresters on the exhaust pipe and got it approved from Safety Department of the Owner.

q) Plant air should not be used to clean any part of the body or clothing or use to blow off dirt on the floor.

r) Gas detectors should be installed in gas leakage prone areas as per requirement of Owner's plant operation personnel.

s) An experienced full time safety personnel shall be exclusively deployed to monitor safety aspects in running plants.

HSE PROMOTION

The contractor shall encourage his workforce to promote HSE efforts at workplace by way of organizing workshops / seminars / training programmes, celebrating HSE awareness weeks & National Safety Day, conducting quizzes & essay competitions, distributing pamphlets, posters & material on HSE, providing incentives for maintaining good HSE practices and granting bonus for completing the job without any lost time accident.

4.0 **DETAILS OF HSE MANAGEMENT SYSTEM BY CONTRACTOR**

4.1 **On Award of Contract**

The Contractor shall prior to start of work submit his Health. Safety and Environment Manual of procedure and HSE Plans for approval by OWNER/MECON. The Contractor shall participate in the pre-start meeting with OWNER/MECON to finalize HSE plans including the following.

- Job procedure to be followed by Contractor for activities covering Handling of equipment's, Scaffolding, Electric Installation, describing the risks involved, actions to be taken and methodology for monitoring each.

- Organizations structure alongwith responsibility and authority records/ reports etc. on HSE activities.

4.2 **During job execution**

4.2.1 Implement approved Health, Safety and Environment management procedure including but not limited to as brought our under para 3.0. Contractor shall also ensure to:

- Arrange workmen compensation insurance, registration under ESI Act, third party liability insurance etc. as applicable.

- Arrange all HSE permits before start of activities (as applicable) like her work, confined space, work at heights, storage of Chemicals/explosives materials and its use and implement all precautions mentioned therein

- Submit timely the completed check list on HSE activities, Monthly HSE report, accident report, investigation report, etc. as per OWNER/MECON requirements. Compliance of instructions on HSE shall be done by Contractor and informed urgently to OWNER/MECON.

- Ensure that resident Engineers/Site-In-Charge of the Contractor shall amend all the Safety Committee/HSE meeting arranged by OWNER/ MECON only in case of his absence from site, a seconds senior most person shall be nominated by him in advance and communicated to OWNER/MECON.

- Display at site office and work locations caution boards, list of hospitals for emergency services available.

- Provided posters, banners, for safe working to promote safety consciousness

- Carryout audits/inspection at sub Contractor work as per approved HSE documents & submit the reports for OWNER/MECON review.

- Assist in HSE audits by OWNER/ MECON and submit compliance report.
- Generate & submit HSE records/ reports as per HSE Plan.
- Appraise OWNER/MECON on HSE activities at site.

5.0 RECORDS

At the minimum, the contractor shall maintain/ submit HSE records in the following reporting formats:

1.	Monthly HSE Checklist cum compliance report	HSE-1
2.	Accident / Incident Report	HSE-2
3.	Supplementary Accident / Incident Investigation report	HSE-3
4.	Near Miss Incident Report	HSE-4
5.	Monthly HSE Report	HSE-5
6.	Permit for working at height	HSE-6
7.	Permit for working in confined space	HSE-7
8.	Permit for radiation work	HSE-8
9.	Permit for demolishing / dismantling	HSE-9

ANNEXURE-A

A. I.S. CODES ON HSE

SP:53	Safety code for the use, Care and protection of hand operated tools.
IS: 818	Code of practice for safety and health requirements in electric and gas welding and cutting operations
IS: 1179	Eye and Face precautions during welding, equipment etc.
IS: 1860	Safety requirements for use, care and protection of abrasive grinding wheels.
IS: 1989(Part-I & II)	Leather safety boots and shoes
IS: 2925	Industrial Safety Helmets
IS: 3016	Code of practice for fire safety precautions in welding and cutting operations.
IS: 3043	Code of practice for earthing.
IS: 3764	Code of safety for excavation work
IS: 3786	Methods for computation of frequency and severity rates for industrial injuries and classification of industrial accidents.
IS: 3996	Safety Code of scaffolds and ladders.
IS: 4082	Recommendation on stacking and storage of construction materials and components at site.
IS: 4770	Rubber gloves for electrical purposes
IS: 5121	Safety code for piling and other deep foundations
IS: 5216 (Part-I)	Recommendations on Safety procedures and practices in electrical works
IS: 5557	Industrial and Safety rubber lined boots.
IS: 5983	Eye protectors
IS:6519	Selection, care and repair of Safety footwear
IS: 6994 (Part-I)	Industrial Safety Gloves (Leather & Cotton Gloves)
IS: 7293	Safety Code for working with construction Machinery

IS: 8519	Guide for selection of industrial safety equipment for body protection
IS: 9167	Ear protectors
IS: 11006	Flash back arrestor (Flame arrestor)
IS:11016	General and safety requirements for machine tools and their operation
IS: 11057	Specification for Industrial safety nets
IS: 11226	Leather safety footwear having direct moulded rubber sole
IS: 11972	Code of practice for safety precaution to be taken when entering a sewerage system
IS: 13367	Code of practice-safe use of cranes
IS: 13416	Recommendations for preventive measures against hazards at working place

B. INTERNATIONAL STANDARDS ON HSE

Safety Glasses	:	ANSI Z 87.1, ANSI ZZ 87.1, AS 1337, BS 2092, BS 1542, BS 679, DIN 4646 / 58211
Safety Shoes	:	ANSI Z 41.1, AS 2210, EN 345
Hand Gloves	:	BS 1651
Ear Muffs	:	BS 6344, ANSI S 31.9
Hard Hat	:	ANSI Z 89.1 / 89.2, AS 1808, BS 5240, DIN 4840
Goggles	:	ANSI Z 87.1
Face Shield	:	ANSI Z 89.1
Breathing Apparatus	:	BS 4667, NIOSH
Welding & Cutting	:	ANSI Z 49.1
Safe handling of compressed Gases in cylinders	:	P-1 (Compressed Gas Association 1235 Jefferson Davis Highway, Arlington VA 22202 – USA)

ANNEXURE-B

DETAILS OF FIRST AID BOX

SL. NO	DESCRIPTION	*QUANTITY*
1.	Small size Roller Bandages, 1 inch wide (Finger Dressing small)	6 Pcs.
2.	Medium size Roller Bandages, 2 inch wide (Hand and Foot Dressing)	6 Pcs.
3.	Large size Roller Bandages, 4 inch wide (Body Dressing Large)	6 Pcs.
4.	Large size Burn Dressing (Burn Dressing Large)	4 Pkts.
5.	Cotton wool (20 gms packing)	4 Pkts.
6.	Antiseptic Solution Dettol (100 ml.) or Savlon	1 Bottle
7.	Mercurochrome Solution (100 ml.) 2% in water	1 Bottle
8.	Ammonia Solution (20 ml.)	1 Bottle
9.	A Pair of Scrissors	1 Piece
10.	Adhesive Plaster (1.25 cm x 5 m)	1Spool
11.	Eye pads in Separate Sealed Packet	4 Pcs.
12.	Tourniqut	1 No.
13.	Safety Pins	1 Dozen
14.	Tinc. Iodine / Betadin (100 ml.)	1 Bottles
15.	Ointment for burns (Burnol 20 gms.)	1 Bottole
16.	Polythene Wash cup for washing eyes	1 No.
17.	Potassium Permanganate (20 gms.)	1 Pkt.
18.	Tinc. Benzoine (100 ml.)	1 Bottole
19.	Triangular Bandages	2 Nos.
20.	Band Aid Dressing	5 Pcs.
21.	Iodex / Moov (25 gms.)	1 Bottole
22.	Tongue Depressor	1 No.
23.	Boric Acid Powder (20 gms.)	2 Pkt.
24.	Sodium Bicarbonate (20 gms.)	1 Pkt.
25.	Dressing Powder (Nebasulf) (10 gms.)	1 Bottole
26.	Medicinal Glass	1 No.
27.	Duster	1 No.
28.	Booklet (English & Local Language)	1 No. each
29.	Soap	1 No.
30.	Toothache Solution	1 No.
31.	Eye Ointment	1 Bottle
32.	Vicks (22 gms.)	1 Bottle
33.	Forceps	1 No.
34.	Cotton Buds (5 nos.)	1 Pkt.
35.	Note Book	1 No.
36.	Splints	4 Nos.
37.	Lock	1 Piece
38.	Life Saving/Emergency/Over-the Counter Drugs	As decided at site
	Box size : 14” x 12” x 4”	

Note : The medicines prescribed above are only indicative. Equivalent medicines can also be used. A prescription, in this regard, shall be required from a qualified Physician.

ANNEXURE – C

TYPE OF FIRES VIS-À-VIS FIRE EXTINGUISHERS

Fire	Fire Extinguishers				
	Water	Foam	CO_2	Dry Powder	Multi Purpose (ABC)
Originated from paper, clothes, wood	√	√	Can control minor surface fires	Can control minor surface fires	√
Inflammable liquids like alcohol, diesel, petrol, edible oils, bitumen	x	√	√	√	√
Originated from gases like LPG, CNG, H_2	x	x	√	√	√
Electrical Fires	x	x	√	√	√

Legend : √ Can be used
x Not to be used

Note : Fire extinguishing equipment must be checked atleast once a year and after every use by an authorized person. The equipment must have an inspection label on which the next inspection date is giver:. Type of extinguisher shall clearly be marked on it.

ANNEXURE – D

Indicative List of Statutory Acts & Rules Relating to HSE

- The Indian Explosives Act and Rules
- The Motor Vehicle Act and Central Motor Vehicle Rules
- The Factories Act and concerned Factory Rules
- The Petroleum Act and Petroleum Rules
- The Workmen Compensation Act
- The Gas Cylinder Rules and the Static & Mobile Pressure Vessels Rules.
- The Indian Electricity Act and Rules
- The Indian Boiler Act and Regulations
- The Water (Prevention & Control & Pollution) Act
- The Water (Prevention & Control of Pollution) Cess Act
- The Mines & Minerals (Regulation & Development) Act
- The Air (Prevention & Control of Pollution) Act
- The Atomic Energy Act
- The Radiation Protection Rules
- The Indian Fisheries Act
- The Indian Forest Act
- The Wild Life (Protection) Act
- The Environment (Protection) Act and Rules
- The Hazardous Wastes (Management & Handling) Rules
- The Manufacturing, Storage & import of Hazardous Chemicals Rules
- The Public Liability Act
- The Building and Other Construction Workers (Regulation of Employment and Condition of service) Act
- Other statutory acts Like EPF, ESIS, Minimum Wage Act.

ANNEXURE – E

CONSTRUCTION HAZARDS, THEIR EFFECTS & PREVENTIVE MEASURES

ACTIVITY	*TYPE OF HAZARD*	EFFECT OF HAZARD	PREVENTIVE MEASURES
(A) EXCAVATION Pit Excavation up to 3.0m	➢ Falling into pit	➢ Personal injury	➢ Provide guard rails/barricade with warning signal. ➢ Provide at least two entries/exits. ➢ Provide escape ladders.
	➢ Earth Collapse	➢ Suffocation / Breathlessness ➢ Buried	➢ Provide suitable size of shoring and strutting, if required. ➢ Keep soil heaps away from the edge equivalent to 1.5m or depth of pit whichever is more. ➢ Don't allow vehicles to operate too close to excavated areas. Maintain at least 2m distance from edge of cut. ➢ Maintain sufficient angle of repose. Provide slope not less than 1:1 and suitable bench of 0.5m width at every 1.5m depth of excavation in all soils except hard rock. ➢ Battering/benching the sides.
	➢ Contact with buried electric cables ➢ Gas/ Oil Pipelines	➢ Electrocution ➢ Explosion	➢ Obtain permission from competent authorities, prior to excavation, if required. ➢ Locate the position of buried utilities by referring to plant drawings. ➢ Start digging manually to locate the exact position of buried utilities and thereafter use

ACTIVITY	TYPE OF HAZARD	EFFECT OF HAZARD	PREVENTIVE MEASURES
			mechanical means.
Pit Excavation beyond 3.0m	➢ Same as above plus ➢ Flooding due to excessive rain/ underground water	➢ Can cause drowning situation	➢ Prevent ingress of water ➢ Provide ring buoys ➢ Identify and provide suitable size dewatering pump or well point system
	➢ Digging in the vicinity of existing Building/ Structure	➢ Building/ Structure may collapse ➢ Loss of health & wealth	➢ Obtain prior approval of excavation method from local authorities ➢ Use under-pining method ➢ Construct retaining wall side by side
	➢ Movement of vehicles / equipments close to the edge of cut.	➢ May cause cave-in or slides ➢ Persons may get buried	➢ Barricade the excavated area with proper lighting arrangements ➢ Maintain at least 2m distance from edge of cut and use stop block to prevent over-run. ➢ Strengthen shoring and strutting
Narrow deep excavations for pipelines, etc.	➢ Same as above plus ➢ Frequent cave-in or slides	➢ May cause severe injuries or prove fatal	➢ Battering/benching of sides ➢ Provide escape ladders
	➢ Flooding due to Hydrostatic testing	➢ May arise drowning situation	➢ Same as above plus ➢ Bail out accumulated water ➢ Maintain adequate ventilation
Rock excavation by blasting	➢ Improper handling of explosives	➢ May prove fatal	➢ Ensure proper storage, handling & carrying of explosives by trained personnel. ➢ Comply with the applicable explosive acts & rules.
	➢ Uncontrolled explosion	➢ May cause severe injuries or prove fatal	➢ Allow only authorized persons to perform blasting operations. ➢ Smoking and open

ACTIVITY	TYPE OF HAZARD	EFFECT OF HAZARD	PREVENTIVE MEASURES
			flames are to be strictly prohibited.
	➢ Scattering of stone pieces in atmosphere	➢ Can hurt people	➢ Use PPE like goggles, face mask, helmets etc.
Rock excavating by blasting (Contd)	➢ Entrapping of persons/ animals.	➢ May cause severe injuries or prove fatal	➢ Barricade the area with red flags and blow siren before blasting.
	➢ Misfire	➢ May explode suddenly	➢ Do not return to site for at least 20 minutes or unless announced safe by designated person.
Piling Work	➢ Failure of pile-driving equipment	➢ Can hurt people	➢ Inspect Piling rigs and pulley blocks before the beginning of each shift.
	➢ Noise pollution	➢ Can cause deafness ➢ and psychological imbalance	➢ Use personal protective equipments like ear plugs, muffs, etc.
	➢ Extruding rods / casing	➢ Can hurt people	➢ Barricade the area an install sign boards ➢ Provide first-aid
	➢ Working in the vicinity of 'Live-Electricity'	➢ Can cause electrocution / asphyxiation	➢ Keep sufficient distance from Live-Electricity as per IS code. ➢ Shut off the supply, if possible ➢ Provide artificial/rescue breathing to he injured.
(B) CONCRETING	➢ Air pollution by cement	➢ May affect Respiratory System	➢ Wear respirators or cover mouth and nose with wet cloth.
	➢ Handling of ingredients	➢ Hand s may get injured	➢ Use gloves and other PPE.
	➢ Protruding reinforcement rods.	➢ Feet may get injured	➢ Use Safety shoes. ➢ Provide platform above reinforcement for movement of workers.
	➢ Earthing of electrical mixers,	➢ Can cause electrocution / asphyxiation	➢ Ensure earthing of equipments and proper functioning of

ACTIVITY	TYPE OF HAZARD	EFFECT OF HAZARD	PREVENTIVE MEASURES
	vibrators, etc. not done		electrical circuit before commencement of work.
	➢ Falling of materials from height	➢ Persons may get injured	➢ Use hard hats ➢ Remove surplus material immediately from work place ➢ Ensure lighting arrangements during night hours.
	➢ Continuous pouring by same gang	➢ Cause tiredness of workers and may lead to accident.	➢ Insist on shift pattern ➢ Provide adequate rest to workers between subsequent pours.
	➢ Revolving or concrete mixer/ vibrators	➢ Parts of body or clothes may get entrapped.	➢ Allow only mixers with hopper ➢ Provide safety cages around moving motors ➢ Ensure proper mechanical locking of vibrator
Super-structure	➢ Same as above plus ➢ Deflection in props or shuttering material	➢ Shuttering / props may collapse and prove fatal	➢ Avoid excessive stacking on shuttering material ➢ Check the design and strength of shuttering material before commencement of work ➢ Rectify immediately the deflection noted during concreting
	➢ Passage to work place	➢ Improperly tied and designed props / planks may collapse	➢ Ensure the stability and strength of passage before commencement of work ➢ Do not overload and under the passage.
(C) REINFORCEMENT	➢ Curtailment and binding of rods	➢ Persons may get injured	➢ Use PPE like gloves, shoes, helmets, etc. ➢ Avoid usage of shift tools
	➢ Carrying of rods for short distance/ at	➢ Workers may injure their hands and shoulders	➢ Provide suitable pads on shoulders and use safety

ACTIVITY	TYPE OF HAZARD	EFFECT OF HAZARD	PREVENTIVE MEASURES
	heights		gloves. ➢ Tie up rods in easily liftable bundles ➢ Ensure proper staging.
	➢ Checking of clear distance/ cover with hands	➢ Rods may cut or injure the finger	➢ Use measuring devices tape, measuring rods, etc.
	➢ Hitting projected rods and standing on cantilever rods	➢ Persons may get injured and fall down	➢ Use safety shoes and avoid standing unnecessarily on cantilever rods ➢ Avoid wearing loose clothes
	➢ Falling of material from height	➢ May prove fatal	➢ Use helmets ➢ Provide safety nets
	➢ Transportation of rods by trucks / trailers	➢ Protruded rods may hit the persons	➢ Use red flags/lights at the ends ➢ Do not protrude the rods in front of or by the side of driver's cabin. ➢ Do not extend the rods 1/3rd of deck length or 1.5 m which is less
(D) WELDING AND GAS CUTTING	➢ Welding radiates invisible ultraviolet and infrared says	➢ Radiation can damage eyes and skin.	➢ Use specified shielding devices and other PPE of correct specifications ➢ Avoid throated tungsten electrodes for GTAW.
	➢ Improper placement of oxygen and acetylene cylinders	➢ Explosion may occur	➢ Move out any leaking cylinder ➢ Keep cylinder in vertical position ➢ Use trolley for transportation of cylinders and chain them ➢ Use flash back arrestors
	➢ Leakage / cuts in hoses	➢ May cause fire	➢ Purge regulators immediately and then turn off ➢ Never use grease or

ACTIVITY	TYPE OF HAZARD	EFFECT OF HAZARD	PREVENTIVE MEASURES
			oil on oxygen line connections and copper fittings on acetylene lines ➢ Inspect regularly gas carrying hoses ➢ Always use red hose for acetylene & other fuel gases and black for oxygen.
	➢ Opening-up of cylinder	➢ Cylinder may burst	➢ Always stand back from the regulator while opening the cylinder ➢ Turn valve slowly to avoid bursting ➢ Cover the lug terminals to prevent short circuiting.
	➢ Welding of tanks, container or pipes storing flammable liquids	➢ Explosion may occur	➢ Empty & purge them before welding ➢ Never attach the ground cable to tanks, container or pipe storing flammable liquids ➢ Never use LPG for gas cutting
(E) RADIOGRAPHY	➢ Ionizing Radiation	➢ Radiations may react with the skin and can cause cancer, skin irritation, dermatitis, etc.	➢ Ensure safety regulations as per BARC/AERB before commencement of job. ➢ Cordon off the area and install Radiation warning symbols ➢ Restrict the entry of unauthorized persons ➢ Wear appropriate PPE and film badges issued by BARC/AERB
	➢ Transportation and Storage of Radiography source	➢ Same as above	➢ Never touch or handle radiography source with hands ➢ Store radiography source inside a pit in an exclusive isolated

ACTIVITY	TYPE OF HAZARD	EFFECT OF HAZARD	PREVENTIVE MEASURES
			storage room with lock and key arrangement. The pit should be approved by BARC/AERB ➢ Radiography source should never be carried either in passenger bus or in a passenger compartment of trains. ➢ BARC/AERB have to be informed before source movement. ➢ Permission from Director General of Civil Aviation is required for booking radio isotopes with airlines.
	➢ Loss of Radio isotope	➢ Same as above	➢ Try to locate with the help of Survey Meter. ➢ Inform BARC/AERB(*) (*) Atomic Energy Regulatory Board (AERB), Bhabha Atomic Research Centre (BARC) Anushaktinagar, Mumbai – 400 094
(F) ELECTRICAL INSTALLATION AND USAGE	➢ Short circuiting	➢ Can cause Electrocution or Fire	➢ Use rubberized hand gloves and other PPE ➢ Don't lay wires under carpets, mats or door ways. ➢ Allow only licensed electricians to perform on electrical facilities ➢ Use one socket for one appliance ➢ Ensure usage of only fully insulated wires or cables ➢ Don't place bare wire ends in a socket

ACTIVITY	TYPE OF HAZARD	EFFECT OF HAZARD	PREVENTIVE MEASURES
			➢ Ensure earthing of machineries and equipments ➢ Do not use damaged cords and avoid temporary connections ➢ Use spark-proof/flame proof type field distribution boxes. ➢ Do not allow open/bare connections ➢ Provide all connections through ELCB ➢ Protect electrical cables / equipment's from water and naked flames ➢ Check all connections before energizing.
	➢ Overloading of Electrical System	➢ Bursting of system can occur which leads to fire	➢ Display voltage and current ratings prominently with 'Danger' signs. ➢ Ensure approved cable size, voltage grade and type. ➢ Switch off the electrical utilities when not in use. ➢ Do not allow unauthorized connections. ➢ Ensure proper grid wise distribution of Power.
	➢ Improper laying of overhead and underground transmission lines / cables	➢ Can cause electrocution and prove fatal	➢ Do not lay unarmored cable directly on ground, wall, roof of trees ➢ Maintain at least 3m distance from HT cables ➢ All temporary cables should be laid at least 750 mm below ground on 100 mm

ACTIVITY	TYPE OF HAZARD	EFFECT OF HAZARD	PREVENTIVE MEASURES
			fine sand overlying by brick soling ➢ Provide proper sleeves at crossings/ intersections ➢ Provide cable route markers indicating the type and depth of cables at intervals not exceeding 30m and at the diversions / termination.
(G) FIRE PREVENTION AND PROTECTION	➢ Small fires can become big ones and may spread to the surrounding areas	➢ Cause burn injuries and may prove fatal.	➢ In case a fire breaks out, press fire alarm system and shout “Fire, Fire” ➢ Keep buckets full of sand & water/fire extinguishing equipment near hazardous locations ➢ Confine smoking to ‘Smoking Zones’ only ➢ Train people for using specific type of fire equipments under different classes of fire ➢ Keep fire doors/ shutters, passages and exit doors unobstructed ➢ Maintain good house keeping and first-aid boxes (for detail refer Annex-2) ➢ Don’t obstruct assess to Fire extinguishers ➢ Do not use elevators for evacuation during fire ➢ Maintain lightening arrestors for elevated structures ➢ Stop all electrical motors with internal combustion. ➢ Move the vehicles from dangerous

ACTIVITY	TYPE OF HAZARD	EFFECT OF HAZARD	PREVENTIVE MEASURES
			locations. ➢ Remove the load hanging from the crane booms. ➢ Remain out of the danger areas.
	➢ Improper selection of Fire Extinguisher	➢ It may not extinguish the fire	➢ Ensure usage of correct fire extinguisher meant for the specified fire (for details refer Appendix-C) ➢ Do not attempt to extinguish Oil and electric fires with water. Use foam cylinders/CO_2/sand or earth.
	➢ Improper storage of highly inflammable substances	➢ Same as above	➢ Maintain safe distance of flammable substances from source of ignition ➢ Restrict the distribution of flammable materials to only min. necessary amount ➢ Construct specifically designed fuel storage facilities ➢ Keep chemicals in cool and dry place away from hat. Ensure adequate ventilation ➢ Before welding operation, remove or shield the flammable material properly ➢ Store flammable materials in stable racks, correctly labeled preferably with catchments trays. ➢ Wipe off the spills immediately

ACTIVITY	TYPE OF HAZARD	EFFECT OF HAZARD	PREVENTIVE MEASURES
	➢ Short circuiting of electrical system	➢ Same as above ➢ Can cause Electrocution	➢ Don't lay wires under carpets, mats or door ways ➢ Use one socket for one appliance ➢ Use only fully insulated wires or cables ➢ Do not allow open/bare connections ➢ Provide all connections through ELCB ➢ Ensure earthing of machineries and equipments
(H) VEHICULAR MOVEMENT	➢ Crossing the Speed Limits (Rash driving)	➢ Personal injury	➢ Obey speed limits and traffic rules strictly ➢ Always expect the unexpected and be a defensive drive ➢ Use sat belts/helmets ➢ Blow horn at intersections and during overtaking operations. ➢ Maintain the vehicle in good condition ➢ Do not overtake on curves, bridges and slopes
	➢ Adverse weather condition	➢ Same as above	➢ Read the road ahead and ride to the left ➢ Keep the wind screen and lights clean ➢ Do not turn at speed ➢ Recognize the hazard, understand the defense and act correctly in time.
	➢ Consuming alcohol before and during he	➢ Same as above	➢ Alcohol and driving do not mix well. Either choose

ACTIVITY	TYPE OF HAZARD	EFFECT OF HAZARD	PREVENTIVE MEASURES
	driving operation		alcohol or driving. ➢ If you have a choice between hitting a fixed object or an oncoming vehicle, hit the fixed object ➢ Quit the steering at once and become a passenger. Otherwise take sufficient rest and then drive. ➢ Do not force the driver to drive fast and round the clock ➢ Do not day dram while driving
	➢ Falling objects / Mechanical failure	➢ May prove fatal	➢ Ensure effective braking system, adequate visibility for the drives, reverse warning alarm. ➢ Proper maintenance of the vehicle as per manufacturer instructions
(I) PROOF TESTING (HYDROSTATIC/ PNEUMATIC TESTING	➢ Bursting of piping ➢ Collapse of tanks ➢ Tanks flying off	➢ May cause injury and prove fatal	➢ Prepare test procedure & obtain CONSULTANT/ Owner's approval ➢ Provide separate gauge for pressurizing pump and piping/equipment ➢ Check the calibration status of all pressure gauges, dead weight testers and temperature recorders ➢ Take dial readings at suitable defined intervals and ensure most of them fall between 40-60% of the gauge scale range ➢ Provide safety relief valve (set at

ACTIVITY	*TYPE OF HAZARD*	EFFECT OF HAZARD	PREVENTIVE MEASURES
			pressure slightly higher than test pressure) while testing with air/nitrogen ➢ Ensure necessary precautions, stepwise increase in pressure, tightening of bolts/ nuts, grouting, etc. before and during testing ➢ Keep the vents open before opening any valve while draining out of water used for hydro testing of tanks ➢ Pneumatic testing involves the hazard of released energy shored in compressed gas. Specific care must therefore be taken to minimize the chance of brittle failure during a pneumatic leak test. Test temperature is important in this regard and must be considered when the designer chooses the material of construction ➢ A pressure relief device shall be provided, having a set pressure not higher than the test pressure plus the lesser of 345 KPa (50 psi) or 10% of he test pressure. The gas used as test fluid, if not air, shall be nonflammable and nontoxic.
(J) WORKING AT HEIGHTS	➢ Person can fall down	➢ May sustain severe injuries or	➢ Provide guard rails/barricade at the

ACTIVITY	TYPE OF HAZARD	EFFECT OF HAZARD	PREVENTIVE MEASURES
		prove fatal	work place ➢ Use PPE like safety belts, full body harness, life line, helmets, safety shoes, etc. ➢ Obtain a permit before starting the work at height above 3 meters ➢ Fall arrest systems like safety nets, etc. must be installed ➢ Provide adequate working space (min. 0.6 m) ➢ Tie/weld working platform with fixed support ➢ Use roof top walk ladder while working on a slopping roofs ➢ Avoid movement on beams
		➢ May hit the scrap / material stacked at the ground or in between	➢ Keep the work place neat and clean ➢ Remove the scrap immediately
	➢ Material can fall down	➢ May hit the workers working at lower levels and prove fatal.	➢ Same as above plus ➢ Do not throw or drop material or equipment from height ➢ All tools to be carried in a toolkit bags or on working uniform ➢ Remove scrap from the planks ➢ Ensure wearing of helmet by the workers at low level
(K) CONFINED SPACES	➢ Suffocation / drowning	➢ Unconsciousness, death	➢ Use respiratory devices, if required ➢ Avoid over crowding inside a confined space ➢ Provide Exhaust Fans for ventilation ➢ Do not wear loose clothes, neck ties,

ACTIVITY	TYPE OF HAZARD	EFFECT OF HAZARD	PREVENTIVE MEASURES
			etc. ➢ Fulfill conditions of the permit. ➢ Check for presence of hydrocarbons, O_2 level ➢ Obtain work permit before entering a confined space ➢ Ensure that the connected piping of the equipment which is to be opened is pressure free, fluid has been drained, vents are open and piping is positively isolated by a blind flange
	➢ Presence of foul smell and toxic substances	➢ Inhalation can pose threat to life.	➢ Same as above plus ➢ Check for hydrocarbon and Aromatic compounds before entering a confined space ➢ Depute one person outside the confined space for continuous monitoring and for extending help in case of an emergency
	➢ Ignition / flame can cause fire	➢ Person may sustain burn injuries or explosion may occur	➢ Keep fire extinguishers at a hand distance ➢ Remove surplus material and scrap immediately ➢ Do not smoke inside a confined space ➢ Do not allow gas cylinders inside a confined space ➢ Use low voltage (24V) lamps for lighting ➢ Use tools with air motors or electric tools with max.

ACTIVITY	TYPE OF HAZARD	EFFECT OF HAZARD	PREVENTIVE MEASURES
			voltage of 24V ➢ Remove all equipments at the end of the day
(L) HANDLING AND LIFTING EQUPMENTS	➢ Failure of load lifting and moving equipments	➢ Can cause accident and prove fatal	➢ Avoid standing under the lifted load and within the operating radius of cranes ➢ Check periodically oil, brakes, gears, horns and tyre pressure of all moving machinery ➢ Check quality, size and condition of all chain pulley blocks, slings, U-clamps, D-shackles, wire ropes, etc. ➢ Allow crane to move only on hard, firm and leveled ground ➢ Allow lifting slings as short as possible and check gunny packings at the friction points ➢ Do not allow crane to tilt its boom while moving ➢ Install Safe Load Indicator ➢ Ensure certification by applicable authority.
	➢ Overloading of lifting equipments	➢ Can cause electrocution and fire	➢ Safe lifting capacity of derricks and winches written on them shall be got verified. ➢ The max safe working load shall be marked on all lifting equipments ➢ Check the weight of columns and other heavy items painted on them and accordingly decide about the crane

ACTIVITY	TYPE OF HAZARD	EFFECT OF HAZARD	PREVENTIVE MEASURES
			capacity, boom and angle of erection ➢ Allow only trained operators and riggers during crane operation
	➢ Overhead electrical wires	➢ Can cause electrocution and fire	➢ Do not allow boom or other parts of crane to come within 3 m reach of overhead HT cables ➢ Hook and load being lifted shall preferably remain in full visibility of crane operator.
(M) SCAFFOLDING, FORMWORK AND LADDERS	➢ Person can fall down	➢ Person may sustain severe injuries and prove fatal	➢ Provide guard rails for working at height ➢ Face ladder while climbing and use both hands ➢ Ladders shall extend about 1m above landing for easy access and tying up purpose ➢ Do not place ladders against movable objects and maintain base at ¼ unit of the working length of the ladder ➢ Suspended scaffolds shall not be less than 500 mm wide and tied properly with ropes ➢ No loose planks shall be allowed ➢ Use PPE, like helmets, safety shoes, etc.
	➢ Failure of scaffolding material	➢ Same as above	➢ Inspect visually all scaffolding materials for stability and anchoring with permanent structures. ➢ Design scaffolding

ACTIVITY	TYPE OF HAZARD	EFFECT OF HAZARD	PREVENTIVE MEASURES
			for max. load carrying capacity ➢ Scaffolding planks shall not be less than 50x250 mm full thickness lumber or equivalent. These shall be cleared or secured and must extend over the end supports by at least 150mm and not more that 300 mm ➢ Don't overload the scaffolds ➢ Do not splice short ladders to make a longer one. Vertical ladders shall not exceed 6m.
	➢ Material can fall down	➢ Persons working at lower level gets injured.	➢ Remove excess material and scrap immediately ➢ Carry the tools in a tool-kit bag only ➢ Provide safety nets
(N) STRUCTURAL WORKS	➢ Personal negligence and danger of fall	➢ Can cause injury or casualty	➢ Do not take rest inside rooms built for welding machines or electrical distribution system ➢ Avoid walking on beams at height ➢ Wear helmet with chin strap and safety belts when working at height ➢ Use hand gloves and goggles during grinding operations ➢ Cover or mark the sharp and projected edges ➢ Do not stand within the operating radius of cranes
	➢ Lifting / slipping of	➢ Same as above	➢ Do not stand under the lifted load

ACTIVITY	TYPE OF HAZARD	EFFECT OF HAZARD	PREVENTIVE MEASURES
	material		➢ Stack properly all the materials. Avoid slippage during handling ➢ Control longer pieces lifted up by cranes from both ends ➢ Remove loose materials from height ➢ Ensure tightening of all nuts and bolts
(O) PIPELINE WORKS	➢ Erection / lowering failure	➢ Can cause injury	➢ Do not stand under the lifted Load ➢ Do not allow any person to come within the radii of the side boom handling pipes ➢ Check the load carrying capacity of the lifting tools and tackles ➢ Use safe Load Indicators ➢ Use appropriate PPEs
	➢ Other	➢ Same as above	➢ Wear gum boots in marshy areas ➢ Allow only one person to perform signaling operations while lowering of pipes ➢ Provide night caps on pipes ➢ Provide end covers on pipes for stoppage of pigs while testing/cleaning operations.

FORMAT NO. : HSE-1, REV. 0

HSE CHECKLIST CUM COMPLIANCE REPORT (1/6)

Project: _____ Contractor :_____
Date: _____ Owner :_____
Inspection By:_____ Report No. :_____
Frequency : Fortnightly Job No :_____

Note: write 'NA' wherever the item is not applicable

SL. NO.	ITEM	YES	NO	REMARKS	ACTION
1	**HOUSEKEEPING**				
a)	Waste containers provided and used				
b)	Sanitary facilities adequate and clean				
c)	Passageways and Walkways clear				
d)	General neatness of working areas				
e)	Others				
2	**PERSONNEL PROTECTIVE EQUIPMENT**				
a)	Goggles; Shields				
b)	Face protection				
c)	Hearing protection				
d)	Safety shoes				
e)	Hand protection				
f)	Respiratory Masks etc.				
g)	Safety Belts				
h)	Safety Helmet/Hard Hat				
I)	Others				
3	**EXCAVATIONS/OPENINGS**				
a)	Openings properly covered or barricaded				
b)	Excavations shored				
c)	Excavations barricaded				
d)	Overnight lighting provided				
e)	Others				
4	**WELDING & GAS CUTTING**				
a)	Gas cylinders chained upright				
b)	Cables and hoses not obstructing				
c)	Screens or shields used				
d)	Flammable materials protected				
e)	Fire extinguisher(s) accessible				
f)	Others				
5	**SCAFFOLDING**				
a)	Fully decked platforms				
b)	Guard and intermediate rails in place				

SL. NO.	ITEM	YES	NO	REMARKS	ACTION
c)	Toe boards in place				
d)	Adequate shoring				
e)	Adequate access				
f)	Others				
6	**LADDERS**				
a)	Extension side rails 1m above				
b)	Top of landing				
c)	Properly secured				
d)	Angle + 70 from horizontal				
e)	Others				
7	**HOISTS, CRANES AND DERRICKS**				
a)	Condition of cables and sheaves OK				
b)	Condition of slings, chains, hooks and eyes OK				
c)	Inspection and maintenance logs maintained				
d)	Outriggers used				
e)	Signs/barricades provided				
f)	Signals observed and understood				
g)	Qualified operators				
h)	Others				
8	**MACHINERY, TOOLS AND EQUIPMENT**				
a)	Proper instruction				
b)	Safety devices				
c)	Proper cords				
d)	Inspection and maintenance				
e)	Others				
9	**VEHICLE AND TRAFFIC**				
a)	Rules and regulations observed				
b)	Inspection and maintenance				
c)	Licensed drivers				
d)	Others				
10	**TEMPORARY FACILITIES**				
a)	Emergency instructions posted				
b)	Fire extinguishers provided				
c)	Fire-aid equipment available				
d)	Secured against storm damage				
e)	General neatness				
f)	In accordance with electrical requirements				
g)	Others				
11	**FIRE PREVENTION**				
a)	Personnel instructed				
b)	Fire extinguishers checked				
c)	No smoking in Prohibited Areas				
d)	Hydrants Clear				

SL. NO.	ITEM	YES	NO	REMARKS	ACTION
e)	Others				
12	**ELECTRICAL**				
a)	Use of 3-core armoured cables				
b)	Usage of 'All insulated' or 'double insulated' electrical tools				
c)	All electrical connection are routed through ELCB				
d)	Natural Earthing at the source of power (main DB)				
e)	Continuity and tightness of earth conductor				
f)	Covering of junction boxes, panels and other energized wiring places				
g)	Ground fault circuit interrupters provided				
h)	Prevention of tripping hazards				
i)	Others				
13	**HANDLING AND STORAGE OF MATERIALS**				
a)	Properly stored or stacked				
b)	Passageways clear				
c)	Others				
14	**FLAMMABLE GASES AND LIQUIDS**				
a)	Containers clearly identified				
b)	Proper storage				
c)	Fire extinguishers nearby				
d)	Others				
15	**WORKING AT HEIGHT**				
a)	Erection plan and work permit obtained				
b)	Safety nets				
c)	Full body harness and lanyards; chute lines				
d)	Health Check record available for workers going up?				
e)	Others				
16	**CONFINED SPACE**				
a)	Work permit obtained				
b)	Test for toxic gas and sufficient availability of oxygen conducted				
c)	At least one person outside the confined space for monitoring deputed				
d)	Availability of sufficient means of entry, exit and ventilation				
e)	Fire extinguishers and first-aid facility ensured				
f)	Lighting provision made by using 24V lamps				
g)	Proper usage of PPEs ensured				
17	**RADIOGRAPHY**				
a)	Proper storage and handling of source as per BARC / AREB guidelines				
b)	Working permit obtained				
c)	Cordoning of the area done				

SL. NO.	ITEM	YES	NO	REMARKS	ACTION
d)	Use of appropriate PPE's ensured				
e)	Proper training to workers/supervisors imparted				
f)	Minimum occupancy of workplace ensured				
18	**HEALTH CHECKS**				
a)	Workers medically examined and found to fit for working : i) At heights ii) In confined space.				
b)	Availability of First-aid facilities				
c)	Proper sanitation at site, office and labour camps				
d)	Arrangement of medical facilities				
e)	Measures for dealing with illness				
f)	Availability of Portable drinking water for workmen & staff				
g)	Provision of crèches for children				
h)	Stand by vehicle available for evacuation of injured.				
19	**ENVIRONMENT**				
a)	Chemical and other effluents properly disposed				
b)	Cleaning liquid of pipes disposed off properly				
c)	Seawater used for hydro-testing disposed off as per agreed procedure				
d)	Lubricant Waste/Engine oils properly disposed				
e)	Waste from Canteen, offices, sanitation etc. disposed properly				
f)	Disposal of surplus earth, stripping materials, oily rags and combustible materials done properly				
g)	Green belt protection				

Signature of Resident
Engineer with Seal

FORMAT NO. : HSE-2, REV. 0

ACCIDENT / INCIDENT REPORT

(To be submitted by Contractor after every Accident / Incident within 24 hours)

Report No:_____
Date: _____

Name of Site:-_____
CONTRACTOR_____

Type of Accident / Incident : ☐ Fatal ☐ Other Lost Time ☐ Non Loss Time ☐ First-Aid case

NAME OF THE INJURED……
AGE ……
FATHER'S NAME……..
SUB-CONTRACTOR M/S……..
DATE & TIME OF ACCIDENT……
LOCATION ……

BRIEF DESCRIPTION OF ACCIDENT

CAUSE OF ACCIDENT

NATURE OF INJURY/DAMAGE

MEDICAL AID PROVIDED/ACTIONS TAKEN

INTIMATION TO LOCAL AUTHORITIES (IF APPLICABLE)

DATE:

SIGNATURE OF CONTRACTOR
WITH SEAL

To : OWNER…….. 1 COPY
: RCM/SITE-IN-CHARGE, MECON 3 COPIES

→ Divisional Head (Constn.) through RCM
→ Project Manager MECON, through RCM

FORMAT NO. : HSE-3, REV. 0

SUPPLEMENTARY ACCIDENT / INCIDENT INVESTIGATION REPORT

Supplementary to Report No: _____(Copy enclosed)

Project:_____ Site:_____
Name of Work :_____ Date:_____
Contractor:_____ Work Order / LOI No. :_____

NAME OF THE INJURED …….
AGE : ……...
SUB-CONTRACTOR M/S……...
DATE & TIME OF ACCIDENT / INCIDENT ……
LOCATION……

BRIEF DESCRIPTION & CAUSE OF A ACCIDENT/ INCIDENT

NATURAL OF INJURY/DAMAGE

COMMENTS FROM MEDICAL PRACTITIONER WHO ATTENDED THE VICTIM/INJURED

SUGGESTED IMPROVEMENT IN THE WORKING CONDITION IF ANY

LOSS OF MANHOURS AND IMPACT ON SITE WORKS

ANY OTHER COMMENT BY SAFETY OFFICER.

DATE: SIGNATURE OF CONTRACTOR WITH SEAL

To : OWNER…….. 1 COPY
: RCM/SITE-IN-CHARGE, MECON 3 COPIES

→ Divisional Head (Constn.) through RCM
→ Project Manager MECON, through RCM

FORMAT NO. : HSE-4, REV. 0

NEAR MISS INCIDENT – SUGGESTED PROFORMA

Report No: _____

Name of Site :_____ Date :_____

Name of Work :_____ Contractor :_____

INCIDENT REPORTED BY :

DATE & TIME OF INCIDENT :

LOCATION :

BRIEF DESCRIPTION OF INCIDENT

PROBABLE CAUSE OF INCIDENT

SUGGESTED CORRECTIVE ACTION

STEPS TAKEN TO AVOID RECURRENCE YES ☐ NO ☐

DATE: SIGNATURE OF CONTRACTOR WITH SEAL

To : OWNER…….. 1 COPY

: RCM/SITE-IN-CHARGE, MECON 3 COPIES

→ Divisional Head (Constn.) through RCM

→ Project Manager MECON, through RCM

FORMAT NO. : HSE-5, REV. 0

MONTHLY HEALTH, SAFETY & ENVIRONMENT (HSE) REPORT
(To be submitted by each Contractor)

Actual work start Date:_____ For the Month of:_____
Project:_____ Report No:_____
Name of the Contractor:_____ Status as on:_____
Name of Work:_____ Name of Safety officer:_____

ITEM			UPTO PREVIOUS MONTH	THIS MONTH	CUMU-LATIVE
a)	Average number of Staff & Workmen (average daily headcount, not man days)				
b)	Manhours Worked				
c)	Number of HSE meeting organized at site				
d)	Number of HSE awareness programmes conducted at site				
e)	Number of Lost Time Accidents (LTA)	Fatal			
		Other LTA			
f)	Number of Loss time Injuries (LTI)	Fatalities			
		Other LTI			
g)	Number of Loss Time Accidents				
h)	Number of First Aid Cases				
i)	Number of Near Miss Incidents				
j)	Man-days lost due to accidents				
k)	LTA Free Manhours i.e. Number of LTA free manhours from the Lst LTA				
l)	Compensation cases raised with Insurance				
m)	Compensation case resolved and paid to workmen				
n)	Whether workmen compensation policy taken		Y/N		
o)	Whether workmen compensation policy valid		Y/N		
p)	Whether workmen registered under ESI Act		Y/N		
Remark					

DATE:

Safety Officer /Resident Engineer
(Signature and Name)

To : OWNER
: RCM/, MECON (2 COPIES)

FORMAT NO. : HSE-6, REV. 0

PERMIT FOR WORKING AT HEIGHT (ABOVE 2 METER)

Project Site : …… Sr. No.: ……
Name of the work: …….. Date: ……
Name of Contractor : …….. Nature of Work : ……
Total No.of Workers: …….. Exact location of work : ……
Duration of work: from …….. to ……

The following items have been checked and compliance shall be ensured during the currency of the permit:

Sl.	ITEM	DONE	NOT REQD.
1.	Equipment/Work Area inspected	☐	☐
2.	Considered hazard from other routine/non-routine operations and concerned person alerted	☐	☐
3.	ELCB provided	☐	☐
4.	Proper lighting provided	☐	☐
5.	Area cordoned off.	☐	☐
6.	Precautions against public traffic taken	☐	☐
7.	Sound Scaffolding provided	☐	☐
8.	Adequate protected Platform provided	☐	☐
9.	Acces and Exit to the area (Ladder properly fixed)	☐	☐
10.	Floor Openings covered	☐	☐
11.	Safety Net provided	☐	☐
12.	Heath check of personnel	☐	☐

A. Following personal protective equipment are provided (mark) and used as relevant Safety helmet/Gloves/Goggles/Shoes/Face Shield/Life Line/Safety Belt/Safety Harness.

B. This permit shall be available at the work site at all times.

C. Permit shall be issued for maximum one week only (Monday to Sunday).

D. This permit shall be applicable in non-operational areas.

E. After completion of the work, used permits shall be preserved for record purposes.

F. Additional precautions, if any …….

Permission is granted to work (See overleaf) = Yes/No

Name of Contractor's Supervisor (Initiator)

Name of Contractor's Safety Officer (Issuing Authority)

GRANT OF PERMIT AND EXTENSIONS

Sl. No.	Validity Period From …… To ……	Work time From …..Hrs. To …….Hrs.	Initiator (Supervisor of Contractor)	Issuing Authority (Safety Officer) of Contractor	Verification by CONSULTANT with date

Additional safety instructions, if any.

FORMAT NO. : HSE-7, REV. 0

CONFINED SPACE ENTRY PERMIT

Project Site : …… Sr. No.: ……
Name of the work: ……. Date: ……
Name of Contractor : …….. Nature of Work : ……
Exact location of work : …….

Safety Requirements : POSITIVE ISOLATION OF THE VESSEL IS MANDATORY

(A) Has the equipment been ?								
Y	NR		Y	NR		Y	NR	
☐	☐	isolated from power / steam / air	☐	☐	water flushed &/or steamed	☐	☐	radiation sources removed
☐	☐	isolated from liquid or gases	☐	☐	Manways open & ventilated	☐	☐	Proper lighting provided
☐	☐	depressurized &/or drained	☐	☐	cont. inset gas flow arranged	☐	☐	
☐	☐	blanked / blinded / disconnected	☐	☐	adequately cooled	☐	☐	

(B) Expected Residual Hazards								
Y	NR		Y	NR		Y	NR	
☐	☐	lack of O_2	☐	☐	combustible gas / liquid	☐	☐	H_2S / toxic gases
☐	☐	corrosive chemicals	☐	☐	pyrophoric iron / scales	☐	☐	electricity / static
☐	☐	Heat / stream / frost	☐	☐	high humidity	☐	☐	ionizing radiation
☐	☐		☐	☐		☐	☐	

(C) Protective Measures								
Y	NR		Y	NR		Y	NR	
☐	☐	gloves	☐	☐	ear plug / muff	☐	☐	goggles / face shield
☐	☐	protective clothing	☐	☐	dust / gas / air line mask	☐	☐	personal gas alarm
☐	☐	Grounded air educater / blower / AC	☐	☐	attendant with SCBA / air mask	☐	☐	rescue equipment / team
☐	☐	Fire fighting arrangements	☐	☐	safety harness & lifeline	☐	☐	communication equipment
☐	☐		☐	☐		☐	☐	

Authorization / Renewal (It is safe to enter the confirmed space)

Date	No. of Persons Allowed	Name of Persons allowed	Signature		Time		Signature Workman
			Contractor's Supervisor	Contractor's Safety Officer	From	To	

Permit Closure :

(A) Entry ☐ was closed ☐ stopped ☐ will continue on

(B) ☐ Site left in a safe condition
☐ Housekeeping done

(C) Multi lock ☐ removed ☐ key transferred
☐ Ensured all men have come out ☐ Manways barricaded

Remarks, if any :

FORMAT NO. : HSE-8, REV. 0

RADIATION WORK PERMIT

Project : Sr. No.:

Name of the work : Date:

Name of Contractor : Job No. :

Location of work :

Source Strength :

Cordoned distance (m) :

Name of Radiographing agency : Approved by Owner / MECON ☐

The following items have been checked & compliance shall be ensured during currency of the permit :

S. No.	Item Description	Done
1.	Safety regulations as per BARC/AERB ensured while source in use/ in transit & during storage.	☐
2.	Area cordoned off.	☐
3.	Lighting arrangements for working during nights ensured.	☐
4.	Warning signs / flash lights installed.	☐
5.	Cold work permit taken (if applicable)	☐
6.	PPEs like film badges, dosimeters used.	☐

Additional precautions, if any _____

(Radiography Agency's BARC / AREB authorized Supervisor) (Contractor's Safety Officer)

Permission is granted.

Permit is valid from _____ AM/PM _____ Date to _____ AM/PM _____ Date

(Signature of permit issuing authority)

Name : Designation : Date :

Permit renewal :

Permit extended upto		Additional precautions required, if any.	Sign of issuing authority with date
Date	Time		

Work completed / stopped / area cleared at _____ Hrs. of Date _____

(Sign of permit issuing authority)
Name :

FORMAT NO. : HSE-9, REV. 0

RADIATION WORK PERMIT

Project : Sr. No.:

Name of the work : Date:

Name of Contractor : Job No. :

Name of Contractor :

Line No. / Equipment No. /Structure to be dismantled :

Location details of dismantling / demolition with sketch : (Clearly indicate the area)

The following items have been checked & compliance shall be ensured during currency of the permit :

S. No.	Item Description	Done	Not Applicable
1.	Services like power, gas supply, water, etc. disconnected.	☐	☐
2.	Dismantling / Demolishing method reviewed & approved.	☐	☐
3.	Usage of appropriate PPEs ensured.	☐	☐
4.	Precautions taken for neighboring structures	☐	☐
5.	First-Aid arrangements made	☐	☐
6.	Fire fighting arrangements ensured	☐	☐
7.	Precautions taken for blasting	☐	☐

(Contractor's Supervisor) (Contractor's Safety Officer)

Permission is granted.

(Permit issuing authority)
Name :
Date :

Completion Report :

Dismantling / Demolishing is completed on _____ Date at _____ Hrs.

Materials / debris transported to identified location ☐

Tagging completed (as applicable) ☐

Services like power, gas supply, water, etc. restored ☐

(Permit issuing authority)

Edition : 1

SPECIFICATION
FOR
QUALITY ASSURANCE SYSTEMS
REQUIREMENTS

SPECIFICATION NO.: MEC/S/05/21/66

(OIL & GAS SBU)
MECON LIMITED
DELHI 110 092

CONTENTS

Sl.No.	Description
1.0	INTRODUCTION
2.0	DEFINITIONS
3.0	CONTRACTORS SCOPE OF WORK
4.0	QUALITY ASSURANCE REQUIREMENTS

FORMAT FOR QUALITY PLAN FORMAT 00001

FORMAT FOR OBSERVATION ON FORMAT 00002

1.0 INTRODUCTION

This specification establishes the Quality Assurance Requirements to be met by the sub-contractors (including turnkey Contractors) and their sub-vendors.

In case of any conflict between this specification and other provisions of the contract/ purchase order, the same shall be brought to the notice of MECON, at the stage of bidding and shall be resolved with MECON, prior to the placement of order.

2.0 DEFINITION

Bidder

For the purpose of this specification, the word “Bidder” means the person(s), firm, company or organisation who is under the process of being contracted by MECON/ Owner for delivery of some products (including service). The word is considered synonymous to supplier, contractor or vendor.

Correction

Action taken to eliminate the detected non-conformity.

Refers to repair, rework or adjustment and relates to the disposition of an existing non-conformity.

Corrective Action

Action taken to eliminate the causes of an existing non-conformity, defect or other undesirable situation in order to prevent recurrence.

Preventive Action

Action taken to eliminate the causes of a potential non-conformity, defect or other undesirable situation in order to prevent its recurrence.

Process

Set of inter-related resources and activities which transform inputs into outputs.

Special Process

Processes requiring pre-qualification of their process capability.

3.0 CONTRACTORS SCOPE OF WORK

3.1 Prior to award of contract

The bidder shall understand scope of work, drawings, specifications and standards etc., attached to the tender/ enquiry document, before he makes an offer.

The bidder shall submit milestone chart showing the time required for each milestone activity and linkages between different milestone activities alongwith overall time period required to complete the entire scope of work.

The bidder shall develop and submit manpower and resource deployment chart.

The bidder shall submit, alongwith the bid, a manual or equivalent document describing/ indicating/ addressing various control/ check points for the purpose of quality assurance and the responsibilities of various functions responsible for quality assurance.

3.2 After the award of contract

The bidder shall submit the schedule for submission of following documents in the kick-off meeting or within two weeks of the placement of order, whichever is earlier.

- Detailed Bar Chart
- Quality plan for all activities, required to be done by the bidder, to accomplish offered scope of work.
- Inspection and test plans, covering various control aspects.
- Job procedures as required by MECON/ Owner.
- Procurement schedule for items to be supplied by contractor covering inspection of the same.

Various documents submitted by the bidder shall be finalised in consultation with MECON. Here it shall be presumed that ones a bidder has made an offer, he has understood the requirements given in this specification and agrees to comply with them in totality unless otherwise categorically so indicated during pre-award stage through agreed deviation/ exception request. All Quality Assurance Plan (QAP) documents shall be reviewed by concerned functional groups of MECON and the bidder shall be required to incorporate all comments within the framework of this specification at this stage of the contract. It is also obligatory on the part of the bidder that obtains approval on every Quality Assurance Plan (QAP) documents, before he starts using a particular document for delivery of contracted scope of work. Participation of MECON/ Owner in review/ approval of quality plan/ QAP documents does not absolve the contractor of his contractual obligations towards specified and intended use of the product (or service) provided/ to be provided by him under the contract.

3.3 **During job execution**

During job execution, the bidder shall fully comply with all quality document submitted and finalised/ agreed against the requirements of this specification. Approval of MECON on all these documents shall be sought before start of work.

Bidder shall produce sufficient quality records on controlled/ agreed forms such that requirements given in this specification are objectively/ demonstrable.

Bidder shall facilitate MECON/ Owner during quality/ technical audits at his works/ sites.

Bidder shall discharge all responsibilities towards enforcement of this specification on all his sub-contractors for any part of the scope which is sub-contracted.

4.0 **QUALITY ASSURANCE SYSTEM REQUIREMENTS**

4.1 The bidder shall nominate an overall incharge of the contract titled as “Project Manager” for the scope of work of agreed contract. The name of this person shall be duly intimated to MECON including all subsequent changes, if any. MECON shall correspond only with the project manager of the bidder on all matters of the project. The project manager of the bidder shall be responsible for co-ordination and management of activities with bidder’s organisation and all sub-vendors appointed by the bidder.

After award of work, the bidder may review augmentation of manpower and resources deployment chart (submitted earlier), detail it out, if so consented by MECON/ Owner and resubmit the same as “issued for effective implementation of the project”.

4.2 The bidder shall plan the contract scope of work on quality plan format such that no major variation is expected during delivery of contract scope of work. These quality plan shall be made on enclosed format complete in all respect. The quality plan shall be assumed to be detailing bidder’s understanding and planning for the contract/ offered scope of work. The bidder shall plan the type of resources including various work methodology which he agrees to utilize for delivery of contract scope of work.

4.3 The bidder is required to review the contract at all appropriate stages to evaluate his capabilities with respect to timely and quality completion of all activities pertaining to contracted scope of work and shall report for constraints, if any to MECON/ Owner.

4.4 The design activities, if any, performed during delivery of contract scope of work shall be so controlled that the outputs is reliable enough. It is expected that during development of design, the bidder shall take recourse to detailed checking, inter departmental reviews and documented verification methods.

4.5 For all documents which the bidder is likely to utilise for delivery of contract scope of work, a system must exist which assures that latest/ required version(s) of the document(s) is available at all location/ point of use.

4.6 In case the bidder decides to sub-contract any part/ full of the contract scope of work (without prejudice to main Contractual condition), the bidder shall :

- Evaluate the technical and financial capabilities and past performance of the sub-contractor(s) and their products and/ or services before awarding them with the sub-contracted scope of work. Selection of a sub-contractor should meet MECON approval in documented form.

- Requirement of this specification shall be enforced on sub-contracted agency also. The bidder shall choose sub-contractor based on their capability to meet requirements of this specification also.

  Note: It may so happen that, in a given situation, a sub-contractor may not have a system meeting the requirements of this specification. In all such eventualities, bidder may lend his system to sub-contractor for the contract such that sub-contractor effectively meets the requirements of this specification. In all such cases MECON shall be duly informed.

4.7 Bidder shall establish adequate methodology such that the materials supplied by the Owner/ MECON shall be adequately preserved, handled and made use of for the purpose for which they are provided.

4.8 All output delivered against contract scope of work shall be suitably identified in such a manner that either through identification or some other means, sufficient traceability is maintained which permits effective resolution of any problem reported in the outputs.

4.9 Critical activities shall be identified and the bidder is required to have documented methodologies which he is going to utilize for carrying out such activities under the contract scope of work. Wherever it is difficult to fully inspect or verify the output (special process), bidder shall pre-qualify, the performers and methodologies.

4.10 All inspections carried out by the bidder's surveillance/ inspection staff shall be conformity to quality plans and/ or inspection and test plans. All inspection results shall be duly documented on controlled/ agreed forms such that results can be co-related to specific product, that was inspected/ tested.

4.11 All inspection, measuring & test equipments (IMTEs) shall be duly calibrated as per National/ International standards/ codes and only calibrated and certified IMTEs shall be utilized for delivery of contract scope of work.

4.12 All outputs/ products delivered against contract scope of work shall be duly marked such that their inspection status is clearly evident during all stages/ period of the contract.

4.13 All non-conformities (NCs) found by the contractor's inspection/ surveillance staff shall be duly recorded, including their disposal action. The deficiencies observed during stage of the product, shall be recorded and resolved suitably. Effective corrective and preventive action shall be implemented by the bidder for all repetitive NCs, including deficiencies.

4.14 All deficiencies noticed by MECON/ Owner representative(s) shall be recorded on a controlled form (Format No. 00002). Such deficiencies shall be analysed by the bidder and effective and appropriate correction, corrective and preventive actions shall be implemented. Bidder shall intimate MECON/ Owner of all such corrective and preventive action implemented by him.

4.15 Bidder shall establish appropriate methodologies for safe and effective handling, storage, preservation of various materials/ inputs encountered during delivery of contract scope of work.

4.16 Bidder shall prepare sufficient records for various processes carried out by him for delivery of contract scope of work such that requirements of this specification are objectively demonstrable. In case MECON/ Owner finds that enough objective evidence/ recording is not available for any particular process, bidder shall be obliged to make additional records so as to provide sufficient objective evidence. The decision of MECON/ Owner shall be final and binding on such issues.

4.17 The bidder shall arrange internal quality audits at quarterly intervals, to independently assess the conformance by various performers to the requirements of this specification. The findings of such assessment shall be duly recorded and a copy shall be sent to MECON/ Owner for review.

4.18 For all special processes, bidder shall deploy only qualified performers. Wherever MECON/ Owner observes any deficiency, the bidder shall arrange the adequate training to the performer(s) before any further delivery of work.

FORMAT – 00001

Bidder's Quality Plan		Project Name :				PO/ Contract Ref:				
General			Performing Functions			Inspection Functions			Audit Function	
Activity Description	Procedure Number	Code of Conformance	Performer	Checker	Reviewer/ Approver	Sampling Plan	Testing and Inspection Code	Type of (Approval) Surveillance	Audit Scope	Owner's/ MECON Review/ Audit Requirement

Note: 1) The bidder ensures that the filled up format conforms to minimum requirements on Quality Plan/ Quality Assurance, specified by MECON on drawings/ standards/ specifications/ write-up.

2) The bidder confirms that document is issued for information/ approval of Owner/ MECON for the project implementation

OBSERVATION OF QUALITY ASPECTS

FORMAT – 00002

Job No. and Description Issued to : M/s			No. : Date :
Location of Work : Item of Work :			
Details of Observation(Deficiency)	Recommended Course of Action Time Allowed for Correction :		
Issued by : _____ Name of Signature of RCM, MECON Site			
Corrective Action taken report by Contractor/ Vendor : Date : Name and Signature			
Distribution (before resolution) :			
Project Manager Owner	Chief Business Executive MECON	MECON Inspection New Delhi	Resident Construction Manager, MECON Site
Verification of Resolution by MECON : Date : Name of Signature			
Distribution (before resolution) :			
Project Manager Owner	Chief Business Executive MECON	MECON Inspection New Delhi	Resident Construction Manager, MECON Site

Rev. : 0
Edition : 1

SPECIFICATION
FOR
DOCUMENTATION FOR PIPELINE CONSTRUCTION

SPECIFICATION NO.: MEC/S/05/21/69

(OIL & GAS SBU)
MECON LIMITED
DELHI 110 092

CONTENTS

SL.NO.	DESCRIPTION
1.0	SCOPE
2.0	RECORDS
3.0	AS-BUILT DRAWINGS AND PIPE BOOK

1.0 **SCOPE**

1.1 This specification covers the minimum requirements of various records, reports and drawings for all aspects of pipeline construction to be prepared by Contractor and submitted to the Company at intervals as described in this specification and as directed by Company.

1.2 All document required to prepared and submitted by Contractor as per this specification shall be in addition to the various reports, records, methodology statement, calculation, drawings etc. to be submitted by the Contractor for Company's record, review or approval as per the requirements of all other specification included in the Contract between the Company and Contractor.

1.3 This specification shall be read in conjunction with the conditions of all specifications and document included in the Contract between Company and Contractor.

2.0 **RECORDS**

Contractor shall submit daily, weekly, monthly and after completion to the Company, various records and reports for Company's documentation purpose during and immediately after the construction. This shall as minimum include, but not limited to the following :

2.1 **Daily**

- Separate progress reports of all crews
- Daily welding results and repairs
- Actual weather conditions
- Application for deviations, if any
- Accidents
- Damages
- Activities required from Company
- Materials Receipts
- Urgently required materials

2.2 **Weekly**

- Up-to-date list of confirmed site instruction issued by Company
- Materials `taken over'
- Material defects and repairs
- Outstanding activities of Company

- List of installed markers, chainage
- Required approval from Company
- Progress planned
- Reports of manning of all crews, equipment and plant
- Report of equipment and plant
- Report of accidents
- Report of damages
- Report of acquired release, permits
- Priced variations
- Required materials for next month

2.3 **Monthly**

- Progress report for payment, safety report, report of accidents, security report, health and environment report, material balance, approved deviations.

2.4 Further, Contractor shall supply (for approval if required to the Company with document such as but not limited :

- Organogram for construction work.
- Bio-data of key personnel (including foremen).
- (Revised) list of address of personnel in particular of medical staff, safety and security offers.
- (Revised) list of approved coaters.
- (Revised) list of approved sub-contractors.
- Time schedule.
- Acquired permits and/ or approvals from Authorities, if any.
- Minutes of meeting with Company with comments, if any.
- Material certificates, material receipt.
- Guarantee from vendors and sub-contractor.
- Calculations, temporary works, bouyance, blasting.
- Drawings issued by Contractor.
- Vendors drawings.
- As-built of route maps, alignment sheets, details drawings and isometric drawings.
- Procedures such as surveying, stacking, fencing.
- Welding procedure qualification records, radiographic procedure qualification, welder qualification.
- Coating procedure.
- Installation of crossings.
- Hydrostatic testing.
- Blasting.

- Radiographic report alongwith original radiographs
- Pipe and welding book.
- Reports

  - Material tests (coating, welding, painting)
  - Computerised Potential Logging Test
  - Water Samples
  - Cleaning, Pigging Report before Hydrostatic Test
  - Hydrostatic Test
  - Calibration Test
  - Blasting Trials
  - Equipment certificate (dead weight tester, instruments, vessels, equipment)
  - Manuals
  - Major water crossings
  - Waste disposal
  - Disposal of water after hydrostatic test.

2.5 Contractor shall submit to company colour photographs of various construction activities/ operations at regular intervals. Size, number and frequency of the photographs shall be mutually agreed upon at a later stage. Also Contractor shall make video recordings of all operations right from the start of construction till the completion of the work, covering to the extent as instructed by Company and submit to Company. Upon completion of the work, Contractor and submit edited master tape plus six copies of video recording in VHS formats or any format ordered by the Company. The duration of video recording shall be of ½ hour and shall cover all aspects of the job.

3.0 AS-BUILT DRAWINGS AND PIPE BOOK

3.1 General

Contractor shall prepare “as-built” drawings of all by or on behalf of Company issued drawings and of all Contractor work drawings including vendor drawing, such as but not limited to :

For Pipeline Section :

- Route Maps
- Alignment Sheets
- Detail Drawings (road, railway, minor water crossings, major water crossings, valley crossings)

- Isometric drawings of installations
- Special installation

Further Contractor shall prepare a pipe Weld Book.

If required by the Company, Contractor shall update the diskettes for drawings issued for construction of the job.

3.2 **"As-Built" Drawings**

Contractor shall prepare a complete set of "as-built" drawings. From the start of construction, Contractor shall on daily basis process any changes in two sets of drawings. Deleted parts shall be indicated in red, new parts in blue, remarks in green and unchanged parts in yellow. Said drawings shall be kept at site and be available to Company at all times. Contractor shall prepare "as-built" drawings based on these data. On completion of the work, one revised film transparency of all drawing made "as-built" by Contractor containing the "as-built" information shall be handed over to Company as well as one complete set of CD ROM/ floppy diskettes as specified by Company.

Contractor shall prepare and submit a specimen of the layout of the drawings for Company's approval.

The required measurement for "as-built" drawing shall be executed by Contractor by experienced, qualified surveyors.

The surveyors shall daily take care of all measurement required such as but not limited to:

- Horizontal location of pipeline with regard to deviations and Permanent Grid Pillars.
- Vertical Level with regard to Mean Sea Level of pipeline and grade.
- Location and type of bends, fittings etc. and grades, points of intersection.
- Change of wall thickness, materials.
- Location and details of valves, insulating flanges, fencing.
- Location and details of crossing pipes, vents.
- Location and type of coating.
- Location and type of weighting, anchoring.
- Location and type of markers.
- Location of further appurtenance (Pig-Signallers)
- Location of ROU and of pipeline with respect to ROU.
- Type of soil.

- Type of rock
- Type of blasting and ripping.
- Sand padding.
- Type of road pavement.
- Details of bank protection, number of insulators, seals.

Contractor shall also prepare isometric drawings of all installation (facilitates) etc. for which the data as mentioned in or required for the Pipe and Welding Book can be identified and these drawings can also be used for material accounting.

3.3 Nameplates of Equipment

All permanent equipment supplied and installed by Contractor shall be provided with plates by Contractor. All texts shall be submitted to Company for approval before plates may be manufactured.

3.4 Pipe Book

Every page of the pipe and Welding Book shall mention:

- Data relevant to the project and section there of.
- Sequential number.
- Length brought forward (for pipes and other materials).
- Length to bring forward (for pipes and other materials).

Alignment sheet number and atleast the location thereon of two welds on every page of the pipe Book.

Further,

- Diameter of pipeline
- Length of each pipe
- Wall thickness
- Pipe number
- Heat number, certificate number
- Cut and re-numbered pipe ends
- Coating type
- Date of stringing
- Date of welding
- Weld number
- Welder number
- Direction of working

- Type of welding, electrodes, diameter of electrode etc.
- Heat treatment
- Equipment used for radiography
- Limits of water crossings
- Test pressure and date of test.

In order to achieve this, Contractor shall identify all pipe elements. Sample format of Pipe Book shall be submitted for Company approval.

3.5 As-Built Documents

Contractor shall prepare all documents in the prescribed format as indicated below. In addition to the hard copies, softcopies of final documents shall also be submitted in electronic media i.e. CD / DVD format.

Software used for the preparation of these documents shall be as follows:

Type	document	Software
a)	Reports/ Documents	MS Office
b)	Drawings	Auto CAD

For the purpose of preparation of as-built drawings, Contractor shall update the "Issued for construction" drawings issued by the Company. It shall be the Contractor's responsibility to covert the drawings furnished by the Company in hard copy into CAD drawings including scanning, digitising and converting the drawings into a suitable format compatible with the AutoCAD and above. As-built drawings shall be prepared only on AutoCAD drawings.

SPECIFICATION FOR CALIPER PIGGING

SPECIFICATION NO. MEC/S/05/62/70

मेकॉन

(PROCESS & PIPELINE DESIGN SECTION)

MECON LIMITED

DELHI - 110 092

C O N T E N T S

Sl. No.	Description	Page No.
1.0	INTENT	1
2.0	OBJECTIVE	1
3.0	SCOPE OF WORK	1
4.0	VELOCITY OF DIFFERENT PIGS	2
5.0	FOAM PIG RUN	2
6.0	GAUGE PIG RUN	3
7.0	CLEANING PIG RUN	3
8.0	CALIPER PIG RUN	4
9.0	PIG TRACKING	5
10.0	MARKER DEVICES	5
11.0	DEFECT VERIFICATION	6
12.0	ABNORMAL SITUATIONS	6
13.0	WORK REPORT	7
14.0	INFORMATION TO BE FURNISHED BY BIDDER	8

SPECIFICATION FOR CALIPER PIGGING

1.0 INTENT

The intent of this specification is to setforth the requirements of the caliper pigging. The specification is not intended to be all-inclusive and the use of this specification will not absolve the contractor of his responsibility of generating valid, interpretable and physically verifiable data.

2.0 OBJECTIVE

The objective of the present pigging programme to access the internal geometry of the following pipelines and detect significant geometry defects if any, which may affect safe operation of the pipeline.

The relevant technical specifications of the pipeline including launcher and receiver details in the Annexure.

SCOPE OF WORK

To achieve the above objective, contractors SCOPE OF WORK includes running of adequate numbers of foam pigs, cleaning pigs (magnet, brush, commination of brush and magnet, scraper, pin wheel etc.), gauge pig and caliper pig.

Further the scope of work comprises supply of skilled personnel, all equipment e.g. foam pigs cleaning pigs, gauging pig, caliper pigs, pig locating and pig tracking devices, spares consumables, communication and transportation including their mobilisation and demobilisation. It is expressly understood that this do not limit the scope of work of the CONTRACTOR in any way. The quantities to be mobilized for different equipment (different types of pigs pig tracking device, marker device) accessories, spare and consumables need to be carefully evaluate by the CONTRACTOR taking in to the consideration that caliper pigging of various

pipelines in the scope of work should be carried out without any constraint and turn around time.

The contractor shall submit the details of each type of pig including foam, gauge cleaning and caliper for approval of MECON/ Client, which he proposes to use. Pigs shall be launched in the pipeline only after their design and size has been approved by MECON/ CLIENT. Due care shall be taken not to damage internal coating by the contractor, while proposing the pigs for internally coated pipeline.

The detailed scope of work shall be, but not limited to under

- Supply of all equipment, personnel and consumables.
- Running of foam, Gauge, Cleaning and Caliper pigs and Tracking to generate valid data.
- Placement of marker devices along the Row over the pipeline.
- Identification of defects in the field as found
- Preparation of work reports.

4.0 VELOCITY OF DIFFERENT PIGS

Contractor shall be required to maintain velocities of propelling medium in such a way that the objective of each pig run shall be achieved.

5.0 FOAM PIG RUN

Contractor to carry out adequate number of foam pigs runs in each pipeline covered under Scope of Work prior to running of cleaning pigs to make a final assessment of the line piggability to the satisfaction of the Contractor and provide detailed daily site report for each run in the approved format before commencing the subsequent run. Contractor to select size of the foam pigs in such a way that the objective shall be achieved.

6.0 GAUGE PIG RUN

Contractor to carry out adequate number of gauging pig runs in each pipeline covered under Scope of work including pig tracking for pipeline to assess any internal restriction in the pipeline that may restrict the passage of cleaning and caliper pig. Contractor to provide detailed daily site report for each run in the approved format before commencing the subsequent run Gauge pig shall be equipped with a gauge plate made of Aluminium having its diameters 95% of minimum pipeline Internal Diameter (I.D.). The gauge pig should be able to pass over or negotiate lateral tees or bends on the pipeline.

CLEANING PIG RUN

Pipelines with Internal Coating

Contractor to carry out adequate number of cleaning pig runs by running suitable cleaning pigs in the pipelines including pig tracking till such time contractor is satisified with himself about the degree of cleanliness of pipeline and provide detailed daily site report for each run in the approved format before commencing the subsequent run. Choice of the type of cleaning pig has been left to the contractor. The contractor shall assure that the pigs, which are proposed to be used, are adequately soft and they do not damage internal coating under any circumstances. The brushes and scrappers used shall be of nonmetallic/ plastic material. However, the details of these pigs including their construction details of brushes, scrappers etc. (if applicable) shall be submitted to MECON/ CLIENT for approval before their usage.

Pipelines Without Internal Coating

CONTRACTOR to carry out adequate numbers of cleaning pig runs by running suitable cleaning pigs in pipeline covered under SCOPE OF WORK including pig tracking till such time CONTRACTOR is satisfied with himself

about the degree of cleanliness of pipeline and provide detailed daily site report for each run in the approved format before commencing the subsequent run. Choice of the type of cleaning pig has been left to the contractor. Contractor may deploy brush cleaning pig, magnetic cleaning pig, combination of brush and magnet, scrapper pig etc. the cleaning pigs should be able to pass over negotiate lateral tees or bends on the pipeline

CALIPER PIG RUN

CONTRACTOR to carry out adequate number of electronic geometry (caliper) pig runs each pipeline covered under SCOPE OF WORK including pig tracking for each pipeline decided after findings of gauging pig run to generate valid and interpretable geometry data of the pipeline and analysis of data of the caliper survey to detect the nature, extent and location of geometry defect. Contractor to provide detailed daily site report for each run in the approved format before commencing the subsequent run. The caliper should be capable of inspecting entire length of the pipeline i.e. from launcher to receiver in single run. Battery life should be adequate to commensurate with the run time required to travel the pipeline length. The electronic recorder system should have requisite data storage capacity. The drive cups should have requisite resistance to wear and tear to maintain effective seal throughout the entire run time.

The measurement shall cover the entire 360° of internal pipe wall circumference using properly oriented and suffcient quantity of sensors. For internally coated pipelines adequate care shall be taken by using soft cups so that no damage takes place to the internal coating of pipe. The tool shall be capable to identify and locate the following features as minimum.

- Individual Girth weld
- Dent, ovality, buckles, or any other out of roundness, change in pipeline I.D. and difference of thickness.
- Bend with bend radius and degree of bend.

- Valves or any partially closed valves.
- Tees/ off-takes.

The caliper pig should have minimum capability to identify and detect the defects of following threshold.

Dent	:	3% of outer diameter (O. D.)
Ovality	:	5% of outer Diameter (O. D.)
Location accuracy	:	Axial ± 3.0m
		Circumferential : ± 12°

(For dents, ovalities and pipeline feature as detailed above).

9.0 PIG TRACKING

The movement of any type of pig (Except, foam pig) put into the line during caliper pigging shall be required to be monitored along the pipeline length from launcher to receiver trap. The BIDDER shall detail out the complete methodology of pig tracking proposed to be deployed by him including complete technical details of the equipment and device proposed to be used for this purpose.

It is proposed that pig tracking would be done in a discrete manner at least 5 to and 10 km - interval on each pipeline at preselected locations. The exact KM chainage of these locations shall be decided at site in consultation with the Contractor and CONSULTANT/ COMPANY.

10.0 MARKER DEVICES

The contractor shall submit the details of marker devices, which he proposes to place for relocating the defect accurately in the field, when the same has been identified as a result of Caliper survey.

The contractor shall be responsible for placing these devices (Marker Magnets or Locator coils or any other device) at suitable interval so that the defect can be easily located in the field with minimum above ground measurement. It may be noted that placement of marker devices, their retrieval and locating the identified defect in the field shall be the responsibility of the contractor. The liquidation of defects, if any, is however, not included in the scope of work of the contract.

11.0 DEFECT VERIFICATION

At the discretion of the COMPANY/ CONSULTANT identify at least two verification dig sites for each pipeline jointly with MECON and CLIENT from the recorded data and provide MECON/ CLIENT with their distance from the nearest pipeline feature or reference marker to facilitate location of defect in the field.

The contractor shall depute his representative to observe the verification at verification sites for proving that filed log detected anomalies conform to sizing including linear and circumferential positions.

ABNORMAL SITUATIONS

The objective of this section is to write down foreseeable abnormal circumstances for taking appropriate measures, should such a condition arise during implementation of project.

The following abnormal condition have been foreseen by the Comapny. However, if the BIDDER foresees any other abnormal condition, he is free to make a mention of the same in his technical BID offer:

Tool Failure

CONTRACTOR is required to get valid interpretable and verifiable data for pipeline. In case CONTRACTOR'S equipment fails to perform electronic

geometry inspection to generate valid data for any of the pipeline, CONTRACTOR will make extra runs of pigs to get valid and physically verifiable data.

Stuck-Up Tool

The BIDDER shall details out a contingency plan in his BID as proposed by him in case any of the pigs get stuck up. The plan shall identify procedure for exactly locating the stuck up pig, detail procedure for retrieval of pig, equipment, including support facilities required to retrieve the pig.

If pig do not move from stuck up location, by any measure, then the pipeline section shall have to be cut for retrieval of Pig. Necessary erection, fabrication and modification of pipe with new pipe piece after retrieval of pig shall be done by Contractor. The cost for this works shall be borne by Contractor on actuals. After fabrication & erection, pigging contractor shall run Gauge pig to check internal restriction, if any. Locating the stuck up pig and its retrieval shall be the responsibility of the CONTRACTOR.

WORK REPORT

The work report shall be prepared and submitted in hard copy (4 sets) and Electronics media (2 sets)

The work report shall consist of following as a minimum.

- All field activities.
- Equipment description
- List of installations
- List of significance with feature information and installation reference
- Survey log and enlargement areas of special interest to suitable scale.

INFORMATION TO BE FURNISHED BY BIDDER IN HIS OFFER FOR EVALUATION.

- List of similar projects executed in the past.
- Specification of foam pigs, cleaning pigs, gauge pig and caliper pig for pipelines with and without internal coating respectively.
- Details of caliper pig in following respect.
  Max.% of Nominal pipeline ID tool can pass (% of ID)
  Minimum deformation level reported (as % of ID)
  Accuracy of measurement (% of ID)
  Bend radius tool able to negotiate
- details of pig tracking equipment and pig tracking procedure.
- Pig contingency plan.
- Proposed methodology for execution of pipeline pigging.
- Sample reporting format.
- Minimum velocity of various pigs acceptable to bidder for generation of valid data.

Rev. : 0
Edition : 1

SPECIFICATION
FOR
FIELD JOINT COATINGS OF PIPELINE
FOR HDD CROSSING

SPECIFICATION NO.: MEC/S/05/21/074

(OIL & GAS SBU)
MECON LIMITED
DELHI 110 092

CONTENTS

1.0 SCOPE

2.0 REFERENCE DOCUMENTS

3.0 SPECIFICATION FOR FIELD JOINT COATING MATERIAL

4.0 APPLICATION PROCEDURE

5.0 INSPECTION

6.0 TESTING

7.0 REPAIR OF FIELD JOINT COATING

8.0 REPAIR OF PIPE COATING DEFECTS

9.0 DOCUMENT

PREPARED BY:	CHECKED BY:	APPROVED BY:	ISSUE DATE :
(Binita Brahma)	(Sunil Kumar)	(A.K. Johri)	May 2009

1.0 **SCOPE**

1.1 **General**

This specification covers the minimum requirement for application of anti-corrosion field joints coating on welded pipe section and field tie-in joints referred to here in after as Joint(s). The contractor shall perform all work in accordance with this specification, latest pipeline coating practices and to the full satisfaction of the Owner. The anti-corrosion pipe joint coating shall be compatible with yard applied, Ultra Violet (UV) radiation protected, 3 layer side extruded polyethylene coating conforming to DIN-30670. The sleeve width shall be suitable for cut back of 120 ± 20 mm to be left at both the ends of coated pipes. The job includes supply of all materials equipment, consumables, labour, supervision, quality control, inspection repairs.

1.2 **Manpower, Material & Equipment**

1.2.1 The Contractor shall supply wrap around heat shrinkable sleeves which is composed of two parts such as adhesive coated wrap around and a curable modified epoxy primer alongwith applicator pads.

1.2.2 The supply of wrap around heat shrinkable sleeve shall be under Contractor's scope.

1.2.3 The Contractor shall provide all skilled/ unskilled personnel required for execution of this work.

1.2.4 The joint coating operation starting from cleaning and surface preparation till application of joint coating and wrapping of the pipe joints shall be performed under the supervision of skilled personnel who are well versed in the work.

1.2.5 Contractor shall at his own cost provide a fully equipped laboratory and test facilities with adequate inventory to carry out tests required for procedure qualification and during regular production, for testing of joint coating system.

2.0 **REFERENCE DOCUMENTS**

2.1 Provision of the following documents/ codes shall generally be followed for standard of specification and workmanship.

a) DIN – 30672 : Corrosion protection tapes and Heat Shrinkable Sleeves.

b) SIS – 055900 : Pictorial surface preparation standard for painting steel surfaces.

c) SSPC – SP1 : Steel structure painting council – Solvent Cleaning.

2.2 In case of conflict between the requirements of this specification and that of above referred documents/ codes, the requirements of this specifications shall govern.

3.0 **SPECIFICATION FOR FIELD JOINT COATING MATERIAL**

3.1 **General**

This scope covers the minimum requirement of materials, equipment required for installation of field joint coating by wraparound fibre-reinforcement heat-shrinkable sleeve used for corrosion protection and sealing of field joints in pipelines that are forced through the soil by Horizontal Directional Drilling technique. The sleeves shall be suitable for 3LPE/FBE coated pipes operating up to 60°C continuously.

3.1.1 Each Joint Coating System shall consist of :

a) For HDD Joint Coating fiber glass reinforced heat shrinkable sleeve certified to Stress class C60 type CANUSA-TBK or COVALENCE / DIRAX shall be used. Directional drilling kit, multilayer sleeve system or equivalent to be approved by Owner / Engineer.

b) Only coating material C-60 Class as per EN 12068 and DVGW certified (wrapping tape and heat shrinkable material) will be accepted for all material to be coated.

c) A solvent-free, two component liquid epoxy primer

d) A specifically designed wear cone

e) A clamping belt

3.1.2 **Sleeve Backing**

The heat shrinkable sleeves shall be manufactured from minimum 1.0 mm thick radiation cross linked, thermally stabilized, UV -resistant heat-shrinkable fabric, composed of a fibre glass reinforcement and polyolefin fibres, embedded in a polyolefin matrix.

3.1.3 **Sleeve Adhesive**

The inner surface of the sleeves shall be coated with a controlled thickness of minimum 1mm of adhesive which in combination with the modified epoxy primer, will bond to and seal to the steel pipe and common yard applied medium temperature yard coatings.

3.1.4 **Epoxy Primer**

The Epoxy primer shall be a solvent free, modified two components liquid epoxy type primer, which is applied to cleaned and dry steel surface. When the sleeve coatings,

comes in contact with the liquid primer during installation, a strong bond is formed upon full curing of the system.

3.2 **Properties of Field Joint Coating Material**

The pipe sleeves furnished under this specification shall be tested and shall meet the requirements specified in the table below:-

3.2.1 **Heat-Shrinkable Sleeve Material**

Property	Test Method	**Condition**	Requirement
Cold Crack	ISO 4675		Below 40°C
Chemical resistance	ISO 175	168 hrs. immersion on either 0.1 N NaCl @ 23°C, 0.1N H_2 SO_4 @ 23°C, 0.1 N NaOH @ 23°C, Fuel oil @ 23°C. Petroleum jelly @ 70°C	
Followed by test for bursting strength	ISO 3303	23°C	1100 N Min.
Thermal ageing Followed by test for bursting strength	ISO 188 ISO 3303	150°C 168 hrs. 23°C	1700 N Min.

3.2.2 **Adhesive material**

Property	**Test Method**	**Condition**	**Requirement**
Softening point	ASTM E28		85°C minimum
Peel Strength	DIN 30672	23°C. CHS* 100 mm/ min. 60°C	200 N/cm minimum 60 N/ cm
Peel Strength After immersion for 4 weeks at 23°C~NaOH pH12 H_2SO_4 pH2 ground water solution:- 1.2% H_3PO_4 1.6% KOH	DIN 30672	23°C. CHS* 100 mm/ min.	200 N/cm minimum

Property	Test Method	Condition	Requirement
1.2NaCl 1.0% Fe_2O_3			
Peel Strength after conditioning for 30 cycles from -30°C to 60°C	DIN 30672	23°C. CHS* 100 mm/ min.	60 N/cm minimum
Shear strength	ISO 4587	23°C. CHS* 50 mm/ min.	200 N/cm^2 minimum
Corrosive effect	ASTM D 2671	120°C. 16 hrs.	No corrosion

3.2.3 **Primer Material**

Property	Test Method	Condition	Requirement
Density	ASTM D1084	23 +/- 0.5^0 C Part A: 2 rpm, spindle #6 Part B: 20rpm, spindle #3	Part A: 60+/- 30 Pas Part B: 1.55+/-0.55 Pas
Mixing ratio	By weight By volume	23°C	100:40 100:60
Shear strength	ISO 4587	23°C. CHS* 50 mm/ min.	1000 N/cm^2 minimum

*** CHS = Cross Head Speed**

3.2.4 **Functional Properties**

Sl. No.	Property	Test Method	Condition	Requirement
a)	Impact resistance	DIN 30672	23°C. Class C	No holidays when tested at 20 KV
b)	Penetration resistance	DIN 30672	60°C. Class C	Minimum 70% of original resistance thickness left; no holidays when tested at 20 KV
c)	Specific coating resistance	DIN 30672	23°C.	10^8 Ohm sq. m minimum; no oxidation on pipe surface

Sl. No.	Property	Test Method	Condition	Requirement
d)	Cathodic disbondment resistance	ASTM G42	60°C. 30 days	15 mm increase in radius of disbondment max.
e)	Resistance to split propagation	TEST METHOD-1*		No cut propagation
f)	Resistance to circumferential edge loading	TEST METHOD-2*		50 KN minimum
g)	Resistance to local edge loading (chisel test)	TEST METHOD-3*		6 KN minimum

***Test Methods**

3.3 **Test Methods**

3.3.1 **Resistance to split propagation (Test Method -1)**

A rectangular piece of 50mm width by 150 mm length shall be cut from the material as delivered. A 5mm long, clean cut shall be made mid-way in the piece along once of the long edges perpendicular to this edge. The sample shall be mounted on a clamp that holds it securely and avoids any shrinking during testing.

The assembly shall be placed in an air-circulating oven present at 170^0C.

After 15 minutes, the sample shall be removed from the oven, allowed to cool down to room temperature and examined for cut propagation.

This test simulates the unlikely event when the sleeve gets cut during the installation phase. Sleeves based upon extruded polyelfin show a distinct tendency to propagate the cut along the total width of the sleeve. Sleeves suitable for HDD works shall not exhibit this behaviour.

3.3.2 **Resistance to circumferential edge loading (Test method -2)**

The sleeve shall be installed on a DN 200 three -layer PE coated steel pipe piece. A thick wall steel ring that fits a DN 200 three-layer PE coated steel pipe with a tolerance of 0.2+-0.2 mm shall be positioned against the front edge of the wear cone sleeve and then pushed towards the sleeve system at a constant speed of 5 mm/ min over a distance of 50 mm. The forces necessary shall continuously be registered. The minimum required force shall be less than 50 KN.

During the pushing or pulling operation, any obstacle protruding from the smooth pipe surface is loaded by the surrounding soil that passes by. This test simulates the shear forces that are exerted on to the sleeve by rigid soil type.

3.3.3 **Resistance to local edge loading (Chisel test: Test Method -3)**

The sleeve shall be installed on a DN 200 three-layer-PE coated steel pipe piece.

A chisel as depicted in Figure -1 shall be positioned against the front edge of the wear cone sleeve and, pushed parallel to the pipe surface towards the sleeve system at a constant speed of 5mm/ min over a distance of 50 mm. The forces necessary shall continuously be registered. The minimum required force should not be less than 6 KN.

During the pushing or pulling operation, the pipe may traverse soil area containing solid particles, such as stones, pebbles or crushed rock. These particles tend to rip away the pipe coating locally. Any obstacle protruding from the smooth pipe surface is lifted, leading to soil undercutting. This test determines the resistance of sleeve against this type of abuse.

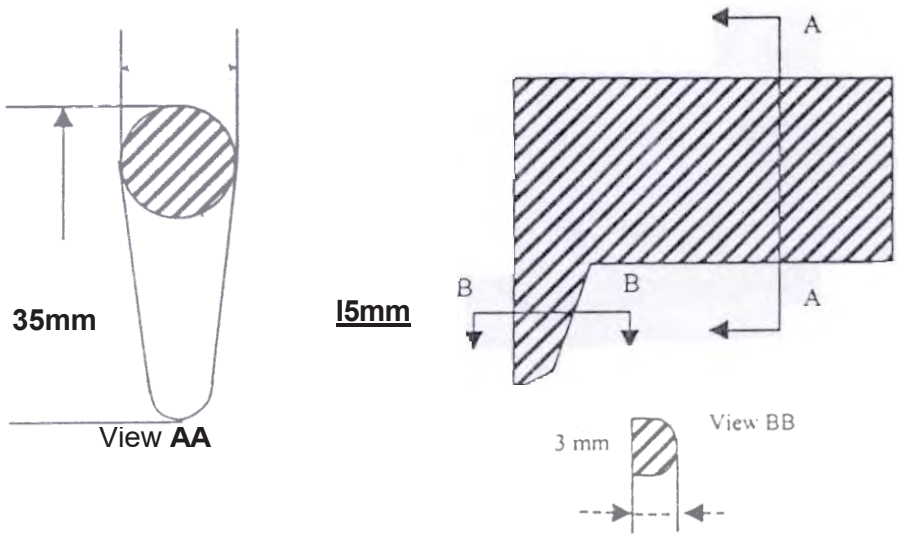

Figure- 1 Chisel

3.4 **Qualification for Contractor's supplied Materials and their Manufacturer**

3.4.1 Prior to procurement of coating materials, Contractor shall furnish the following information for qualification of the Manufacturer and material:

a. Complete descriptive technical catalogs describing the materials offered along with samples of corrosion coating materials, its properties and application instruction as applicable specifically to the project.

b. Reference list of previous supplies, in last 5 years, of the similar material or manufacturer shall be notified to Company, whose approval in writing of all charges shall be obtained before the materials are manufactured.

3.4.2 Contractor shall ensure that the coating materials supplied by him are properly packed and clearly marked with the following :-

- Manufacturer's name
- Material Qualification Certificate Number
- Batch Number
- Date of Manufacturing and date of expiry

3.4.3 Prior to shipment of materials from the Manufacturer's Works. Contractor shall furnish the following documents:

a. Test certificate/results as per Manufacturer's Quality Control Procedure for each batch of materials complying with the requirements of relevant sub-clauses of clause no. 3.2 of the this specification.
b. Specific application instructions with pictorial illustrations.
c. Specific storage and handling instructions.

3.4.4 All documents shall be in English language only.

3.5 **Storage of Materials**

Material shall be stored in sheltered storage by the Contractor in the manufacturer's original packing and away from direct sunlight and in accordance with manufacturer's instructions.

4.0 **APPLICATION PROCEDURE**

4.1 **General**

a) The application procedure shall be in accordance with manufacturer's instruction and the minimum requirements required below whichever are the most stringent and shall be demonstrated to and approved by the Owner.

b) Contractor shall provide and maintain mobile facilities which contains all necessary tools, propane torches, epoxy primer pumps, silicon rollers, testing instruments, equipment, and spares for cleaning, coating, repairs, inspection and testing.

c) Contractor shall furnish sufficient number of the following equipment and the required spares as a minimum for inspection and testing purpose for each crew :

- Fully automatic full circle adjustable holiday detector with audio and visual output signal for inspection of coating.
- Portable Tensile Strength Tester
- Digital Thermometer
- Solid state digital thickness gauge for measuring thickness of joint coating.

4.2 **Pipe Surface Preparation**

a) The Contractor shall thoroughly clean and dry the joint surface by power tool cleaning in accordance with SSPC-SP1. The complete procedure and details of equipment used shall be prepared by the Contractor for Owner's approval prior to commencement of joint coating work.

b) Prior to cleaning operation, Contractor shall visually examine the joint surface area and shall ensure that all defects, flats and other damages have been repaired or removed.

c) Where oil, grease or other materials detrimental to the finished coating is present, it shall be removed with a continuous removal solvents cleaning system to remove completely all such materials in accordance with SSPC-SP1.

d) The standard of finish for cleaned pipe surface shall conform to SA 2½ of Swedish Standard SIS-055900 latest edition. The degree of preparation required to obtain an end product that fulfil the requirements of this specification may not be sufficiently covered and is not limited by SIS-055900. Surface of pipe after shot blasting shall be have an anchor pattern of 50 to 70 microns. This shall be measured by a suitable instrument such as Elecometer.

e) Piper temperature immediately prior to blasting shall be minimum 20°C. At no time shall be blast cleaning be performed when the relative humidity exceeds 85%. Surface temperature must be at least 3°C above the dew point temperature.

f) The abrasive blast material shall be free of impurities and inclusions, water and oil. All abrasives shall be removed after blast by brush or vacuum type

cleaner prior to applying joint coating. The abrasive shall be stored in a dry condition and maintained dry during use.

g) The compressed air for blasting shall be free of water and oil. Contractor to verify air cleanliness at the start of the work and every four hours thereafter. Separators and the traps shall be provided at the compressor and blasting station. Separators and traps shall be checked daily for effective moisture and oil removal during coating operations.

h) The ends of existing line pipe protective coating shall be inspected and chamfered. Unbonded portions of the coating shall be removed and then suitably trimmed. Portions where parent coating is removed shall be thoroughly cleaned as specified.

i) Pipe shall be visually inspected by Contractor immediately after blast cleaning for surface defects such as slivers, laminations, leafing, scores, indentation slugs or any other defects considered injurious to the coating integrity. Such defects shall be reported to Owner and on permission from Owner, such defects shall be removed by filling or grinding in such a way as not to “blue” the steel.

4.3 **Procedure**

a) The application procedure shall be in accordance with manufacturers instruction and the minimum requirements specified below whichever are the most stringent and shall be demonstrated to and approved by the owner.

b) Applicators for coating application shall be given necessary instructions and training before start of work by the CONTRACTOR. To verify and qualify the application procedures, all coating applied during the qualification test, shall be removed for destructive testing until the requirements stated in sections ‘Inspection’ and ‘testing’ of this specification are met.

c) Prior to surface cleaning, the surface shall be completely dry. An effective heating equipment which shall not give rise to deposits shall be used. Care shall be taken to avoid damage to existing coating.

d) All pipe joint surfaces shall be thoroughly examined before the application of the coating in order to ensure that the surfaces are free of oil, grease, rust, mud, earth or any other foreign matter.

e) Liquid epoxy primer shall be applied on the joints immediately after the completion of heating operation.

f) The heat shrink sleeve is then wraparound the joint while the primer is still wet and shall overlap the existing pipe coating by minimum 100 mm on each side.

g) The wraparound sleeve is shrunk on pipe joint with a propane torch moved back and forth over the surface when heated above 125°C, the sleeve shall shrink tightly around the substrate on to the wet-primer. At the time of application of the primer, th pipe surface temperature shall be at least 60°C at every point. To check this, approved temperature indicators shall be used . temperature indicating crayons shall not be used.

h) The wraparound sleeve shall be entirely wrapped around the pipe positioning the closure patch off to one side of the pipe in 10m or 2 O'clock position, with edge of the undergoing layer facing upward and an overlap of min. 100 mm.

i) Heat shrinking shall be procedure shall be applied to shrink the sleeve in such a manner that all entrapped air is removed using gloved hands and hand rollers. The complete shrinking of entire sleeves shall be obtained without undue heating of existing pipe coating and providing due bonding between pipe, sleeve and pipe coating. A thermochrome paint shall be applied a an closure patch to indicate that sufficient heat/ temperature has been obtained. The joint coating shall have wear cone applied over the leading edge of the sleeve and the clamping belt tightened over it.

j) Application of Wear Cone - The leading edge will be given an extra wear cone. Start by heating the leading edge area of the main sleeve to 70^0C. Wrap the leading edge sleeve over the transition Mill coating. Ensure that the closure is placed away from the main sleeve closure Shrink the leading edge sleeve.

k) Application of Metal Belt - The metal belt shall be applied over the wear cone sleeve. The metal belt will be tightened using the strapper tool supplied by the manufacturer.

l) Sufficient manpower working on opposite sides of each pipe joint are required for installation of the sleeve.

m) The installed sleeve shall not be disturbed until the adhesive has solidified.

5.0 INSPECTION

5.1 For wraparound coating, a visual inspection shall be carried out for the following :

- Mastic extrusion on either ends of the sleeves shall be examined
- There shall be no sign of punctures or pinholes or bond failure. The external appearance of the sleeves shall be smooth, free of dimples, air entrapment or void formation.
- Weld bead profile shall be visible over the sleeves.
- The entire closure patch shall have changed colour uniformly.

5.2 **Holiday Inspection**

5.2.1 The Holiday Detector used shall be checked and calibrated daily with an accurate D.C. voltmeter. The detector electrode shall be in direct contact with the surface of coating to be inspected.

5.2.2 The entire surface of the joint section shall be inspected by means of a full circle Holiday Detector approved by OWNER set to DC Voltage of at least 25 kV for wraparound sleeves. Inspection of the heat shrink sleeve coating shall be conducted only after the joint has cooled below + 50°C.

5.2.3 All the coated joints shall be subjected to Holiday Detection test.

5.2.4 An installed sleeve with more than two holiday shall be stripped and a new one be installed.

6.0 **TESTING**

a) OWNER reserves the right to test one out of every 30 joint coating subject to a minimum of 2 joints. CONTRACTOR shall provide all assistance in removing and testing of field joint coatings. From each test sleeve, one or more strips of size 25 mm x 200 mm shall be cut one perpendicular to the pipe axis and slowly peeled off. This test shall be conducted between either sleeve and metal or sleeve and mill coating as per direction of Owner/ Engineer-in-charge.

b) The required peel strength shall be 60 N/cm (min.) at 23°C. The system shall fail only in the adhesive layer. No failure either in adhesion to steel or adhesion to backing shall be permitted. The adhesive layer that remains on the pipe surface shall be free of voids resulting from air or gas inclusion.

c) If the sleeve taken away for test does not meet the requirement of clause 6.0 (b), the adjacent two sleeves do not meet the requirements of clause 6.0 (b) the field joint coating shall be stopped until OWNER is satisfied with application methods.

d) For the test tensile strength, two parallel incisions spaced 1 CM. Apart are made right down to the surface of the steel. A further incision shall then be at right angles to the first angles to the first two incisions. With the aid of a 1 cm. Wide knife the coating is lifted over a length of about 2 cm. And clamped into the tensile tester, where upon a uniform pull is exerted at an angle of 90 degree. The tensile strength shall be more than a 2500psi.

e) Coating thickness shall be checked by non destructive method for each field joint.

7.0 **REPAIR OF FIELD JOINT COATING**

7.1 If a field joint is detected to be unacceptable after inspection and testing as per clause no. 6.0 of this specification. The CONTRACTOR shall , at his own cost :

- determine the cause of the faulty results of the coatings.
- mobilise the services of expert of manufactures, if required.
- test to the complete satisfaction of the OWNER, already completed field joint coatings.
- stop joint coating until remedial measures are taken against the causes of such failures, to the complete satisfaction of the OWNER.

7.2 CONTRACTOR shall replace all the joints coating found or expected to be unacceptable as per clause no. 6.0 of this specification.

7.3 CONTRACTOR shall, at his own cost repair all areas where the coating has been removed for testing by the OWNER or by the CONTRACTOR to the complete satisfaction of the OWNER.

7.4 The upright edges of the damaged areas shall be chamfered, in addition to the steel shall be free from rust, dirt, oil and grease. The coating around the damaged area shall be roughened. After thorough mixing (in accordance with the recommendations of the manufacturer) the filler shall be applied, to sufficient Thickness with the aid of stooping knife, whilst observing ample overlap hardening. The material will require the approval of OWNER.

7.5 After the coating work on welded joints and repairs to the coating have been completed, The coating area as a whole shall be tested with spark-tester before pull back/ lowering/jacking the pipeline.

7.6 Company shall be entitled to check the coating on buried pipelines or parts of pipelines with equipment such as the “Pearson meter” and the resistance meter. If the coating defects are established, the Contractor shall be responsible for excavation at such points, repairing the coating, spark testing and backfilling the excavations without extra charge.

8.0 **REPAIR OF PIPE COATING DEFECTS**

8.1 Any defect or damage in pipe coating observed till incorporation on permanent works shall be rectified by the Contractor at his risk and cost. However, for repair of damaged coating observed during taking over of Owner supplied pipe, if any, shall be paid extra in accordance with the relevant items of Schedule of Rates.

8.2 Field repair of coated pipes shall be carried out by using same type of wraparound sleeves used for joint coating.

8.3 The repair procedure shall be same as specified herein above for application of anti-corrosion field joint coating on welded pipe.

9.0 DOCUMENTATION

9.1 Prior to start the coating works at site Contractor shall furnish following Owner/ Consultant's approved documents in addition to that mentioned in clause no. 3.4 of this specification.

- Procedure for field joint coating & their repair
- Procedure for repair of pipe line coating defects
- Procedure qualification record
- Inspection test plan
- Inspection format

9.2 Final submission of all documents after finish the work shall be as per relevant specification & SCC enclosed with the tender or as per direction of Engineer-in-charge.

Rev. : 0
Edition : 1

SPECIFICATION
FOR
PIPELINE CROSSINGS USING HORIZONTAL DIRECTIONAL DRILLING METHOD

SPECIFICATION NO.: MEC/S/05/21/75

(OIL & GAS SBU)
MECON LIMITED
DELHI 110 092

CONTENTS

SL.NO.	DESCRIPTION
1.0	SCOPE
2.0	REFERENCE DOCUMENTS
3.0	DESIGN AND ENGINEERING
4.0	CONSTRUCTION
5.0	DOCUMENTATION

1.0 **SCOPE**

1.1 This specification covers the minimum requirements for various activities to be carried out by the Contractor for the engineering and construction of pipeline crossing using directional drilling method.

1.2 This specification shall be read in conjunction with the requirements of specification and other documents included in the CONTRACT between owner and Contractor.

1.3 Contractor shall, execute the work in compliance with laws, by laws, ordinance and regulations. Contractor shall provide all services, labour, inclusive of supervision thereof, supply of all materials (excluding "Owner supplied Material), equipment , appliances etc..

1.4 Contractor shall take full responsibility for the stability and safety of all operation and methods involved in the work.

1.5 Contractor shall be deemed to have inspected and examined the work area and its surroundings and to have satisfied himself as far as practicable with the surface conditions, hydrological and climatic conditions, the extent and nature of the work and materials necessary for the completion of the work, and the means of access to the work area.

1.6 Contractor shall be deemed to have obtained all necessary information with regard to risks, contingencies and all other circumstances, which may influence the work.

1.7 Contractor shall, in connection with the work, provide and maintain at his own costs all lights, guards, fencing, as necessary or directed by Owner or their representative.

1.8 For the purpose of this specification, the following definitions shall hold.

- The words `Shall' and `Must' are mandatory.
- The words `Should, May and Will' are non mandatory, advisory, or recommendatory.

1.9 Contractor shall provide free of charge reasonable facilities to Owner's personnel to witness all stages of construction.

2.0 **REFERENCE DOCUMENTS**

Reference has been made in this specification to the latest edition (edition enforce at the time of issue of enquiry) of the following codes, standards and specifications :

a. ASME B 31.4 : Pipeline Transportation Systems for Liquid Hydrocarbons and Other Liquids.

b. ASME B 31.8 : Gas Transmission and Distribution Piping Systems.

c. OISD 226 : Natural Gas Transmission Pipeline and City Gas Distribution Network.

d. MECON's Standards : Navigable Waterway Pipeline Crossing Warning Sign MEC/S/05/21/10

e. MECON's Standards : Standard Specification for Pipeline Construction MEC/S/05/21/01

In case of conflict between the requirements of this specification and the above referred documents, the requirements of this specification shall govern.

3.0 DESIGN AND ENGINEERING

3.1 The limits of each crossing shall be determined by the Contractor on the basis of crossing profile based on survey drawings, design, equipment, installation technique and site condition. Contractor shall furnish all engineering design calculation and crossing drawings etc. to owner for their approval prior to execution of the work.

3.2 Within the entire limits of crossing, the minimum cover to top of coated pipe shall be as specified in the Special Conditions of Contract (SCC).

However, wherever the drilled length for a crossing includes the crossings of obstacles such as roads, railroads, cannals, streams, etc. The following minimum requirements of cover to the pipe shall be satisfied unless specified otherwise in the scope of work in SCC.

For Road Crossing : 1.4 m from top of road to top of pipe.

For railroad crossing : 1.7 m from base of Rail to top of pipe.

For canal crossing : 1.5 m from lowest bed level to top of pipe.

In case the pipeline crosses other utilities, viz., other pipelines, sewers, drain pipes, water mains, telephone conduits and other underground structures, the pipeline shall be installed with at least 500 mm free clearance from the obstacle or as specified in the drawing or such greater minimum distance as may be required by authorities having jurisdiction. Also in all cases, the minimum covers specified above shall be maintained within the entire limits of crossing.

3.3 The entry and exit points of the pipeline at ground level shall not come within the limits of crossing as defined in the crossing drawings.

3.4 Contractor shall carry out calculations for determining the maximum permissible overburden on pipe, to check that the empty pipeline is safe from collapse at any point along the drilled crossing section. Contractor shall submit these calculations to Owner for approval.

3.5 **Pipeline Axis**

The plane containing the pipeline route axis shall be perpendicular to the horizontal plane. There shall be no bending of the pipeline route axis at depths shall lower than 2 meters below ground level.

3.6 **Back-reamed hole and Pipeline Interface**

3.6.1 Contractor shall derive combination of:

- Back-reamed hole diameter
- Bentonite density
- Pipeline submerged weight in bentonite (and means to achieve that weight)

to optimise the crossing design in terms of pipeline stresses and power requirement

3.6.2 Contractor shall indicated what maximum shear stress in the pipeline coating will result from his choice of above parameters and other characteristics described in this section.

3.6.3 Contractor shall furnish all calculations for Owner's approval. If shear stress in pipe coating is, in the opinion of Owner, beyond the permissible limits, Contractor shall revise his choice of parameters to reduce shear stress on pipe coating to permissible value.

3.7 Contractor shall determine in the minimum allowable elastic bend radius for pipe from the following consideration:

3.7.1 Maximum Longitudinal Stress During Installation

Total maximum longitudinal stress in the pipeline due to tension and bending at any location shall not exceed 90% of the SMYS of the pipe material.

Contractor shall, in order to check this requirement, evaluate the maximum tensile forces to which the pipeline is subjected to at any phase of its installation during the pulling operation.

3.7.2. Maximum Equivalent Stress During Final Hydrostatic Test

After installation, the pipeline shall be hydrostatically tested to a minimum test pressure equal to 1.4 times the design pressure or at a pressure stipulated in the Special Conditions of Contract whichever is higher. However, during hydrostatic testing, the combined equivalent stress in the pipeline due to bending and test pressure shall not exceed 90% of the SMYS of pipe material.

3.7.3 Maximum Equivalent Stress During Service

Permissible values of maximum equivalent stress during services shall be governed by the requirements of ANSI B 31.8/B 31.4 as applicable. The details of pipeline operating parameters are provided in the Special Conditions of Contract.

3.7.4 The minimum allowable radius of curvature for the pipeline shall be the highest value of the minimum pipeline elastic radius as computed from the considerations outlined in clause 2.7.1 to 2.7.3 above after correction for drilling inaccuracies or multiplication by the factor 1.85. whichever results in the highest permissible value of minimum elastic bend radius.

3.7.5 Contractor shall submit all calculations for Company's approval alongwith procedure.

3.8 **Pipeline Configuration along the Support String Before Entry Point**

3.8.1 Contractor shall determine the required pipeline configuration in order to allow smooth pull in the crossing entry point and admissible stress in the supported pipeline string. Pipeline combined stress shall not exceed 95% of the specified minimum yield strength for line pipe material.

3.8.2 Contractor shall furnish all calculation and specify the number of required supports, description of the supports, their co-ordinates and capacity in metric tons.

3.8.3 Contractor shall also furnish a drawing of the launching ramp indicating the pipeline configuration.

3.8.4 The distance between each roller shall also be specified and justified.

3.9 Contractor shall, based on result of design and engineering carried out by him, prepare construction drawings for the crossing and shall submit the same for Owner's approval. Construction drawings shall indicate the pipeline profile with levels furnished at sufficient intervals for proper control during construction. Other relevant details viz., entry and exit angles, radius of bends, etc. shall also be indicated. Contractor shall also calculated the total length of pipeline required as well as the maximum tension required on the pull head of the rig.

3.10 All construction works shall be carried out in accordance with the construction drawings approved by Owner.

3.11 Before commencement of any field work, Contractor shall furnish for Owner's approval all design calculations and construction drawings as stipulated in the above clauses.

4.0 CONSTRUCTION

Contractor shall comply with all the conditions and requirements issued by Authorities having jurisdiction in the area where the work is to be performed.

If no public road exists, Contractor shall arrange on his own for access to his work area at no extra cost to owner.

4.1.0 **Installation Procedure**

4.1.1 Contractor shall, before commencing any work at site, submit for Owner's approval a detailed installation procedure.

4.1.2 The installation procedure as a minimum shall include the following:

a) **Project Organisation Chart:**

This shall indicate Contractor's organisational set-up at site and manpower deployment.

b) Details of fabrication yard and launching areas.

c) **Details of Equipment :**

Contractor shall furnish the complete list of all equipment to be deployed for preparation of pipe string and installation of crossing. Technical characteristics and capacity of each equipment including instrumentation, monitoring and control equipment shall be furnished in details.

d) Pipeline string preparation details (hauling, stringing, welding etc.)

e) Hydrostatic test procedure (pre and post installation)

f) Disposal methodology of bentonite slurry.

g) Method of installation covering all steps of construction, viz. Rig up, Pilot hole, Back-Reaming, Pulling Down, Backfilling etc.

h) Calculation for maximum pulling force on the rig and recommended maximum pulling velocity.

i) Time schedule for construction.

4.1.3 The time schedule shall be in accordance with overall time schedule for the project.

4.1.4 Approval by Owner of the methods used by Contractor shall in no way relieve Contractor from the sole responsibility for safe and satisfactory installation, working and operational use of the pipeline crossing.

4.2 **Pipe String Preparation**

Complete pipe string shall be prepared as a single string for pulling. Welding,

radiographic inspection of joints and joint coating of the string shall be performed in accordance with the respective applicable specifications included in the Contract document.

4.3 **Pre-testing**

4.3.1 Contractor shall hydrostatically pre-test the complete pipe string of each crossing before installation as per approved procedure for a minimum period of 24 hours.

4.3.2 After pre-testing, joint coating of the welds shall be done as per specification for specific field joint coating of pipeline for HDD crossing included in the contract document

4.3.3 The section of the pipeline corresponding to the crossing shall, before installation, be subjected to hydrostatic test pressure as stipulated in the Special Conditions of Contract. During the test, Contractor shall check all welds for leakage. Failure, if any, during the test shall be rectified by the Contractor.

4.4 **Gauging**

4.4.1 Before pre and post installation hydrostatic testing, Contractor shall prove the diameter of the pipeline by passing a gauging pig through the pipeline. The gauging pig shall have a diameter equal to 95% of the nominal internal diameter of the pipe. Contractor shall supply and install all temporary scraper launchers/ receivers and other equipment, piping and materials and consumables required for the purpose.

4.5 **Installation**

4.7.1 Installation shall be done in accordance with approval installation procedure.

4.7.2 The lateral offset of the actual exit point of the pilot hole from the calculated and theoretical exit point shall not exceed half per cent (0.5%) of the length of the crossing.

4.7.3 The length tolerance shall not exceed one per cent of the crossing length, subject to the condition that the actual exit point shall not be within the limits of crossing as defined in the approved drawings.

4.7.4 Back reaming shall be done separately from the pipeline pulling operation. The size of the back-reamed hole shall be adequate (approximately 1.5 times the pipeline diameter) to allow enough clearance for a smooth pull-back of the pipeline.

4.7.5 Contractor shall be responsible for maintaining the drilled hole till such time the pipeline is pulled in.

4.7.6 During pulling operation, the buoyancy of the pipeline shall be controlled by suitable approved methods so as to maintain the buoyancy as close as possible to zero during pull-back in order to reduce friction forces of the pipeline in the hole.

4.7.7 Bentonite slurry of specified viscosity shall be pumped into the hole, preventing the wall from collapsing and protecting the pipeline coating.

4.6 **Contractor shall be responsible for the integrity of the corrosion coating.**

4.6.1 Before pull-back operation, megger test shall be done for the entire pipeline (externally corrosion coated) string made for crossing by HDD method.

4.6.2 After pull-back operation to ensure the integrity of pipeline coating, again megger test shall be done for the bored string before tied-in to the mainline pipe. The megger value before & after pulling operation of the pipeline string shall be nearly same and acceptable to Owner.

4.6.3 However, if, in Owner's opinion, the integrity of external corrosion coating of bored pipeline string is not established by above (Clause No. 3.6.1 & 3.6.2), then further in order to ensure the integrity of coating of the bored pipeline string, megger test of the coating shall be carried out in accordance with the following steps:

a) The test must be carried out before the bored pipe is tied-in to the mainline pipe

b) Measure the natural potential of the bored pipe at both ends.

c) Set up the temporary impressed current system with a digital multimeter connected to measure the output current. Position the test electrode anode as far from the bored pipe as interconnecting cable will allow and no closer than 10 meters.

d) Place the reference electrode at the remote end (opposite to impressed current system) to monitor the bored pipe potential

e) Impress a current into the bored pipe start at Zero amp. and increase slowly until the bored pipe potential is depressed to 1.5 V with respect to the reference electrode.

f) Note the current from the digital multimeter and calculate the current density.

g) The desirable value of calculated current density should be less than 70 micro ampere per square meter of drilled pipe surface in contact with the soil.

4.6.4 If Contractor again fails to establish the integrity of coating of the bored pipeline string and the same is not acceptable to Owner, the above works shall not be continued further until the cause analysed and rectified by the Contractor to the entire satisfaction of Owner.

4.7 **Final Hydrostatic Test**

4.7.1 The complete crossing section shall be tested after installation. The test pressure shall be as stipulated in the Special Conditions of Contract. After temperature stabilisation, pressure shall be retained in the pipeline for a period of 6 hours and recorded by manothermograph. The hydrostatic testing shall be carried out in accordance with approved procedures and specification detailed elsewhere in the document.

4.7.2 **Test Procedure**

Contractor shall prepare for Company's approval a hydrostatic test procedure manual for pre-testing and post-installation testing of pipeline. The test procedure manual shall include, but shall not be limited to, the following items:

a. For the pipe section to be tested, a diagram indicating all fittings, vents, valves, temporary connections, relevant elevations and ratings. The diagram shall also indicate injection locations and intake and discharge lines.

b. Estimated amount of test water, water source, including required concentration of corrosion inhibitors and additives, procedure for inhibitor injection and control of concentration.

c. Filling and flushing procedures, including a complete description of all proposed equipment and instruments (including spares), their location and set-up.

d. The type and sequence of pigs and the pig tracking system for cleaning and removal of air pockets, pig inspection procedures, including procedure to be followed in case the gauging pig indicates damage.

e. Procedures for levelling and stabilization after filling and for pressurization and to allow for temperature stabilization.

f. Pressure testing procedure including a complete description of all proposed equipment and instruments (including spares), their location and set-up, and proposed system for observation and recording of data during the pressure test.

g. All calculations including air-volume calculations and pressure change due to temperature change calculations.

h. Procedure for detection and location of leaks.

i. Procedure for safe dewatering the pipeline section after testing, including a complete description of all proposed equipment and instruments (including spares), their location and set-up, the type and sequence of pigs and the pig tracking system along with the pig specifications.

j. Forms for recording the testing data.

4.7.3 Contractor shall furnish all necessary equipment & instrumentation for performing the work including all temporary piping, hydro test header and scraper launcher / receiver etc.

4.7.4 The test medium shall be fresh water to be arranged by the Contractor. The water to be used shall be filtered, shall not be contaminated, and free from sand of silt. Contractor shall submit laboratory test reports of water used for testing. Contractor shall provide Company approved corrosion inhibitors, oxygen scavengers and bactericides to be added to the test water. Contractor shall furnish and install all temporary piping, which may be necessary to connect from source of water to its pumps and manifolds / tankage.

4.7.5 Before filling operation, Contractor shall clean the pipeline by air driven pigs provided with spring loaded brushes and cups to remove all mill scale, rust / sand from the internal of pipe sections.

4.7.6 The hydrostatic test shall be considered as positive if pressure has kept a constant value throughout the test duration, except for changes due to temperature effects, and there is no abrupt pressure drop throughout the test duration.

If test section fails to maintain the specified test pressure after isolation, Contractor shall determine by search the location of leakage or failure. All leaks and failures within the pipe wall or longitudinal seam shall be repaired by replacement of entire joint or joints in which leakage or failure occurs. In those cases where leaks occur in circumferential welds the method of repair shall be determined by Company. Contractor shall comply with instructions of the Company whether to replace a section of the line pipe that includes the line leak or whether to repair the circumferential weld. This repair should, however, meet the requirements of welding specification contained herein. Where failures occur in pipeline field bends, bends shall be replaced with same degree of bends. After completion of repairs, the hydrostatic test shall be repeated in full, as per the approved procedures.

All work of reinstating line pipe, to replace failures, shall be done in accordance with the specifications contained herein.

Contractor shall haul and stockpile all damaged and defective pipes to storage locations designated by the Company. All cracks and splits resulting nom failures shall be coated with an application of grease to preserve the characteristics of failures nom corrosion. Joints of failed pipes shall be marked with paint, with a tag indicating failure details, date and location of failure and pressure at which failure occurred.

4.7.7 After completion of successful hydrotest of the above portion, the pipeline shall be capped and buried. Pipeline end position on the banks shall be marked on the ground by installing location markers on both banks approved by Company.

4.8 **Permanent Pipeline Markers**

On both banks of each river crossing, Contractor shall install a Navigable Waterway Pipeline Crossing Warning Sign in accordance with Std. No. MEC/S/05/21/05. Contractor shall supply all materials and fabricate and install the markers as per reference drawing. Wherever feasible, the pipeline markers shall be installed on the embankments, however, exact location shall be decided based on site conditions and as directed by Company.

4.9 **Fencing**

Wherever specified, Contractor shall supply all materials and install G.I. Wire Chain link security fencing of size 10 m x 10 m x 25 m high with lockable steel gate around the pipe ends and test stations for temporary C.P. on both sides of each river crossing.

4.10 **Idle Time Preservation of Pipeline**

When so stated in the Contract, Contractor shall supply all materials and consumable including water and inhibitor and shall install all piping connections, valves, instrumentation, etc., and perform all works for preservation of pipeline by pressurization with inhibited water. Contractor shall use approved inhibitors and shall determine the required dosages of inhibitors and pressure for idle time preservation of the pipeline for a period of maximum six months nom the date of completion of construction. Corrosion inhibitors and dosages shall be subject to Company's approval prior to use.

4.11 **Final Clean up**

4.11.1 After completion of construction, Contractor shall clear the site of all balance material and debris and bentonite slurry. All balance pipe lengths shall be returned to Owner's designated stock yard(s). Site/ ROW shall be cleared to the complete satisfaction of the land owner's and authorities having jurisdiction. All such works shall be done at no extra cost to Owner. The Owner shall be indemnified against any/ all claims arising as a result thereof.

4.11.2 Contractor shall arrange for safe disposal of all surplus soil and bentonite slurry & corrosion inhibited test water so as to avoid any harm to the environment / occupants at locations duly approved by authorities and pollution control boards having jurisdiction and/or as instructed by Company without any extra cost.

5.0 **DOCUMENTATION**

5.1 In additional to the documents specified elsewhere in this specification. Contractor shall submit to the Owner the following documents/ records.

- Copies of the permits obtained from authorities having jurisdiction.

- Records of pre and post installation hydrostatic testing.
- Record of non-destructive testing of welds.
- Detailed drilling log and downhole data, including, but not limited to, the following :
  - i) Torque and pulling/pushing force
  - ii) Data on drilling fluid.
    - Density
    - Type of mud and additive employed.
    - Mixing, pumping and cleaning.

- Wash and drill pipe data, viz.,
  - i) Dimension and material properties.
  - ii) Data on API classification.
  - iii) Age of and type of inspection previously carried out on these pipes.

- Permits obtained from authorities having jurisdiction for the various works.
- Plan & profile of the drilled hole along with the water level variations.
- Records of hydrostatic pre-testing and final testing.
- Record of Non Destructive Testing of welds.
- Clearance certificates form the landowners and Authorities having jurisdiction regarding satisfactory clean-up and restoration of pipeline RoU and work areas.

- Clearance certificate from the land owners and authorities having jurisdiction regarding satisfactory clean-up and restoration of the pipeline ROW and work sites.

5.2 After completion of construction, Contractor shall prepare and furnish six sets of copies and two sets of reproducible of `As-built' for the crossings. As built drawings shall , as a minimum include the following information

- True profile of the crossing along the pipeline.
- True profile of the pipeline as installed and the depth of cover to top of pipe at regular intervals.
- Location of entry and exit point and angles of entry and exit alongwith lateral offset of exit point from the original pipeline alignment.
- Location and angle of field bends
- Location of pipeline markers.
- All As-Built drawings shall be prepared using software AutoCAD Release 2000 or above. Manually drafted drawings are not acceptable to Company. In addition, to the hard copies, as-built drawings shall also be submitted in electronic media i.e. CD / DVD.

5.3 All documents shall be in English language.

II. TECHNICAL SPECIFICATION FOR TELECOM WORKS

Technical Specification

for

Telecom Works

SPECIFICATION OF OPTICAL FIBER CABLE & HDPE DUCT LAYING AND ASSOCIATED WORKS

SPECIFICATION No. : MEC / S / 05 / E5 / T / 001

MECON LIMITED

DELHI - 110 092

0	27.09.2005	Sudhir	Rakesh Shukla	Pankaj Shrivastava
Revision	Date	Prepared by	Checked by	Approved by

I N D E X

SECTION 1

1.1 INTRODUCTION
1.2 SPECIAL INSTRUCTION TO BIDDER

SECTION 2

2.1 DATA TO BE FURNISHED BY THE BIDDER

SECTION 3

3.1 GENERAL GUIDELINES FOR THE BIDDER

SECTION 4

4.1 OPTICAL FIBER CABLE (for information only)
4.2 JOINTING CLOSURES (for information only)
4.3 PERMANENTLY LUBRICATED HDPE CONDUIT
5.0 OPTICAL FIBER CABLE LAYING
6.0 PERMANENTLY LUBRICATED HDPE CONDUIT LAYING

SECTION 5

VENDOR DATA REQUIREMENTS & DOCUMENTATION

VENDOR'S SITE OFFICE

TESTING & FINAL DOCUMENTATION

SECTION 6

(ANNEXURE DRAWINGS/ SKETCH) (Applicable drawing highlighted)

MEC/05/E5/T/001 REV 0	MEC/05/E5/T/001A REV 0
MEC/05/E5/T/002 REV 0	MEC/05/E5/T/002 A REV 0
MEC/05/E5/T/003 REV 0	MEC/05/E5/T/003 A REV 0
MEC/05/E5/T/004 REV 0	MEC/05/E5/T/004 A REV 0
MEC/05/E5/T/005 REV 0	MEC/05/E5/T/005 A REV 0
MEC/05/E5/T/006 REV 0	MEC/05/E5/T/007 REV 0
MEC/05/E5/T/008 REV 0	MEC/05/E5/T/009 REV 0
MEC/05/E5/T/010 REV 0	MEC/05/E5/T/011 REV 0

SECTION 1

1.1 INTRODUCTION

An Optical Fiber (OFC) system for the Telecommunication requirements has been most suitable for gas pipeline project. Laying of OFC along with pipeline are present trend to economized the project cost. The type, mode of laying are varied as per project requirement. Various options mostly used for pipeline project are covered here. Bidder shall refer respective Scope of Work and Schedule of Rates of project for details of suitable option, type of cable and laying process.

This specification covers the minimum requirement and guidelines for various activities to be carried out by the contractor. As part of project, this Document / specification provides guideline to be followed for Laying of HDPE duct, Blowing / Laying of Optical fiber cable alone or through duct along the pipeline route. It also covers guidelines for Jointing and testing of the cable, HDPE conduit and associated work.

Various proposed option for Scope of Work related to OFC and HDPE duct laying are defined as :

a) OFC to be laid directly burial type to meet the present telecommunication requirements. OFC shall be laid in the same trench as that of the pipeline.

b) OFC to be laid directly burial type to meet the present telecommunication requirements and one HDPE (PLE HDPE) telecom duct shall be laid for future requirement of telecommunication. The both the HDPE duct and OFC shall be laid in the same trench as that of the pipeline.

c) OFC to be laid by blowing technique in permanently lubricated silicore lined HDPE (PLE HDPE) telecom duct (Conduit) to meet the present telecommunication requirements and one HDPE (PLE HDPE) telecom duct shall be laid for future requirement of telecommunication. The both the HDPE duct and OFC shall be laid in the same trench as that of the pipeline.

1.2 SPECIAL INSTRUCTION TO BIDDER

1.2.1 Agency (Vendor / Contractor) that makes the bid in its name and takes the total responsibility for the job irrespective of support from any other sub-agency.

1.2.2 Sub-agency identified by the bidder at the bid stage for execution of a predefined part of the work and details has to be maintained in bid.

1.2.2 The Scope of supply, works, and technical requirements is expiated stated in the Bid document. Bidder is required to study these requirements in detail and make the offer complete in all respects leaving no scope for ambiguity.

SECTION 2

DATA TO BE FURNISHED BY THE BIDDER

(Bidder shall furnished this information at the time of their offer and it will be part of contract for successful bidder)

Bidder shall provide below details of specific experience of the party responsible for HDPE conduit laying, Laying / Blowing of Optical Fiber Cable through HDPE conduit, jointing of HDPE conduit, Optical Fibre cable & testing of HDPE and Optical Fibre cable. The experience record shall be elaborated below, enclosing the copies of the work order & completion certificates. Only those parties shall be accepted for the works, which have proven experience as asked below. Bidder to fill blank (marked (b)), of this form:

(The information necessarily to be submitted during the Bid submission otherwise their offer may be rejected / disqualified for OFC work)

Sl. No.	Description	Specification	Column to be filled by bidder
1	Name & address of the party responsible for Laying, jointing and testing of HDPE conduit in this project.		(b)
1.1	Whether the party has done similar works of laying of HDPE conduit	≥ 50 km in one stretch	Yes / No
1.2	Project name, description, client name, telephone & fax no. of contact person for works done in Sl. No. 1.1 above.		(b)
1.3	Date of completion of work in Sl. No. 1.1 above		(b)
1.4	Length of works in Sl. No. 1.1 above	In kms	(b)
1.5	Supporting documents for works in Sl. No. 1.1 above (a) work order (b) completion certificate	Enclosed	Yes / No
2	Name & address of the party responsible Laying of optical fiber cable for direct underground burial/Blowing application in this project.		(b)
2.1	Whether the party has done similar works optical fiber cable.	≥ 50 km cable	Yes / No
2.2	Project names, description, client name, and telephone & fax no. of contact person for works done in Sl. No. 1 above		(b)
2.3	Date of completion of work in Sl. No. 1.1 above		(b)
2.4	Length of works in Sl. No. 2.1 above	In kms	(b)
2.5	Supporting documents for works in Sl. No. 2.1 above (a) work order (b) completion certificate	Enclosed	Yes / No
3	Name & Address of the party responsible for jointing and testing of Optical fibre cable in this project		(b)
3.1	Whether the party has done similar works of jointing and testing of Optical fibre cable.	≥ 50 km cable	Yes / No
3.2	Project name, description, client name, telephone & fax no. of contact person for works done in Sl. No. 3.1 above.		(b)

Sl. No.	Description	Specification	Column to be filled by bidder
3.3	Date of completion of work in Sl No. 3.1 above		(b)
3.4	Length of works in Sl. No. 3.1 above.	In kms	(b)
3.5	Supporting documents for works in Sl. No. 2.1 above (a) work order (b) completion certificate	Enclosed	Yes / No

Data for the supply of Accessories related to work specified in this document. Bidder to fill up blank spaces (marked (b)), of this form. Legend: NA – Not applicable. **This section is applicable for the supply of these items, if required.**

Sl. No.	Description	Fill column	Specifications meet Bid document (Yes / No)
1)	Permanently Lubricated HDPE conduit		
	Name and Address of manufacturer	(b)	(b)
	Telephone and fax no.	(b)	
	Name and Address of supplier in India	(b)	
	Users certificate confirming satisfactory performance for at least six months as on bid due date.	To be enclosed	
1.1	**HDPE coupler**		
	Name and Address of manufacturer	(b)	(b)
	Telephone and fax no.	(b)	
	Name and Address of supplier in India	(b)	
	Telephone and fax no.	(b)	
	Users certificate confirming satisfactory performance for at least six months as on bid due date.	To be enclosed	
1.2	**End Plugs (Before blowing of OFC)**		
	Name and Address of manufacturer	(b)	(b)
	Telephone and fax no.	(b)	
	Name and Address of supplier in India	(b)	
	Telephone and fax no.	(b)	
	Users certificate confirming satisfactory performance for at least six months as on bid due date.	To be enclosed	
	1.3 Cable Sealing Plug		
	Name and Address of manufacturer	(b)	(b)
	Telephone and fax no.	(b)	
	Name and Address of supplier in India	(b)	
	Telephone and fax no.	(b)	
	Users certificate confirming satisfactory performance for at least six months as on bid due date.	To be enclosed	
	1.4 Duct sealing compound		
	Name and Address of manufacturer	(b)	(b)
	Telephone and fax no.	(b)	
	Name and Address of supplier in India	(b)	

Sl. No.	Description	Fill column	Specifications meet Bid document (Yes / No)
	Telephone and fax no.	(b)	
	Users certificate confirming satisfactory performance for at least six months as on bid due date.	To be enclosed	

The Bidder shall be entirely and exclusively responsible for all works under this bid document. Bidder to fill blank spaces (marked (b)), of this form. Legend : NA – Not applicable.

Sl. No	Description	Performed by (Provide name)	Place of execution of the activity
1.1	Single source responsibility with Performance guarantee for successful completion of scope of work for this project.	Bidder	NA
1.2	HDPE conduit laying, sealing and testing	(b)	Site
1.3	Optical fiber cable Laying	(b)	Site
1.4	Optical fiber cable jointing & testing	(b)	Site
1.5	Documentation	Bidder	NA

Bidder shall specifically indicate the deviation related to technical work if any and give proper justification with documentary evidence for specific deviation.

SECTION 3 (General Guidelines for Bidder):

3.1 The vendor shall be completely responsible for the successful completion of the job. However, to ensure a good quality of workmanship, and the offered system, vendor shall prepare and submit the documents for approval by the Owner / Consultant.

3.2 Vendor shall be totally responsible for the completion of project. In the event any modifications in the specification included in the Bid document are warranted, he shall clearly spell out all such requirements at the time of submission of his offer a deviation list for review and approval of owner and consultant.

Vendor may improve upon specification, in such case vendor shall list out all proposed improvements in Deviation list form along-with his offer for review and approval of owner and consultant.

3.3 If during the course of execution of the work, any discrepancy or inconsistency, error or omission in any or the provisions of the contact is discovered, the same shall be referred to the Consultant for final decision & instruction. He will direct the manner in which the work is to be carried out. The decision of the Owner/Consultant shall be final and conclusive and the vendor shall carry out the work in accordance therewith.

3.4 The data provided in the bid document shall be used for reference purposes for the Bidder. It shall be the bidder's responsibility to verify the data & satisfy him in regard to accuracy & utility of their data.

3.5 Splicing and jointing requirements in addition to above, arising out of any negligence on behalf of the vendor shall be the responsibility of the vendor. In such case, the vendor shall take necessary rectification action at his on cost including necessary materials.

SECTION 4 (SUB-SYSTEM SPECIFICATIONS)

4.1 OPTICAL FIBER CABLE (for information only)

The selected vendor, before execution of the job may collect the final Optical Fiber cable specification.

GENERAL:

Corrugated steel tape armored cable or Galvanized steel wire armored optical cable shall be required and it has to cross various roads, railways, canals, small rivers, marshy areas etc. through appropriate casings & directly as per site conditions.

The intent of the following specifications is to establish the minimum requirements and guidelines for the Optical fiber cable to be used for this project. Wherever in this section "bidder to specify/bidder to provide" is mentioned, same information can be collected after the award of the contract.

4.1.1 TECHNICAL SPECIFICATIONS OF FIBERS

4.1.1.1 General

The fiber shall fulfil latest ITU-T Recommendation G-652 & G-655 for single mode optical fibers.

a)	Total number of fibers	Twelve (12) /Twenty four (24)
b)	Type	G.6.25 (12) / G.652 Eighteen (18),G.655 Six(6)

4.1.1.2 Geometrical, optical & physical characteristics of optical fibers

a)	Mode field diameter	Bidder to specify
b)	Cladding diameter	125 μm ± 2%
c)	Mode field concentricity error	Less than 1 μm
d)	Cladding non-circularity	Less than 2%
e)	Cut-Off wavelength	Bidder to specify
f)	Protective materials/coatings	Optical fibers shall be coated with UV cured double Acrylic Resin. It should not have any reaction with cladding or core material.
g)	Nominal Overall thickness	250 μm

The coatings should provide max. Resistance to micro bending & abrasion and ensure mechanical & optical strength. The coatings shall be easily stripped with mechanical tools.

Fiber Identification

The coating shall be in various colors in order to facilitate fiber identification. Fiber colors shall correspond to IEC publications. The colors shall be durable. The colors should have colorfast properties also in the presence of other materials during the lifetime of cable. The coating and the color shall not react with surrounding jelly.
Each fiber and tube shall be identifiable thought the length of the cable in accordance with following color sequence:

Tube No.	Color of tube	Fiber color	Tube No.	Color of tube	Fiber color
1	Blue	Blue	7	Red	Blue
		Orange			Orange
2	Orange	Green	8	Black	Green
		Brown			Brown
3	Green	Slate	9	Yellow	Slate
		White			White
4	Brown	Red	10	Violet	Red
		Black			Black
5	Slate	Yellow	11	Pink	Yellow
		Violet			Violet
6	White	Pink	12	Aqua	Pink
		Aqua			Aqua

4.1.1.3 Transmission characteristics of fibers

a)	Attenuation	The cabled fiber shall have attenuation coefficient 0.38 dB / km at 1310 mm wavelength region and 0.22, dB / km at 1550 m wavelength region
b)	Chromatic dispersion coefficient	a) Less than 3.5 PS / NM. km at 1288 to 1339 NM b) Less than 5.3 PS / nm. PS / nm. for 1271 to 1360 nm.
c)	Polarization mode dispersion coefficient	Less than 0.5 ps/ km $^{1/2}$

4.1.2 **CABLE CONSTRUCTION SPECIFICATION**

4.1.2.1 General

a) Desired operating life of cable — better than 35 years

b) Drum Length of CSTA, direct underground type O.F. Cable — 2 or 4 km ± 5%

c)1 Cable weight in single drum (for nominal drum length) — Bidder to provide

c)2 No splicing shall be permitted on any fiber in a drum length of the cable.

d) Protection required

The cable shall be protected against damages from termite, fire, chemicals (such as oil. & natural gas and other petroleum products), moisture and water, over the lifetime of the cable.

e) Cable identification

(i) The outer surface o the cable shall be permanently & legibly marked with color in contrast to the outer sheath at regular intervals not exceeding one meter with name of client, name of manufacturer, part number and 'OPTICAL FIBER CABLE'. All the marking over OFC shall be such that it should not be erased during field use.

(ii) The outer surface of each completed cable shall have sequentially numbered metric length markers spaced at regular intervals of one meter.

f) Construction detail of cable

(i) Strength member:

Bidder has to specify (in case of metallic strength member, the same shall be provided with suitable chemical coating to prevent corrosion).

(ii) Filling of Core :

The stranded tubes shall be filled with moisture resistant jelly, which should be compatible with the coated fiber and the surroundings.

(iii) Number of fibers per tube : Two

(vi) Moisture barrier :

Polymer coated Aluminum tape placed longitudinally over the loose tubes. The tape shall form a close fit around the cable core with a sealed overlap of 6 mm minimum. Alternatively, water swellable tape or water swellable powder may be provided over the tube.

(v) Inner sheath — MDPE

Thickness of inner sheath — 1.50 mm minimum Aluminium foil.

(vi) Armoring (Direct Underground burial type)

Corrugated steel (electrolytically chrome plated low carbon steels) tape both side coated with ethylene acrylic copolymer applied longitudinally with minimum overlap of 6 mm minimum.

Thickness of steel tape — 0.15 mm minimum

Thickness of each polymer layer — 0.04 mm minimum

(vii) Outer sheath — HDPE

Thickness of outer sheath — 1.50 mm minimum

(vii) Electrical continuity of the respective metallic layers shall be maintained between the ends of the cable in each drum. The different metallic layers shall not be electrically shorted to each other

4.1.2.2 Mechanical Characteristics of Cable

a) Temperature
Installation & operation 0° C to + 60° C
Storage 0° C to + 65° C
b) Tensile strength For CSTA cable 9.81 W Newton (W is weight of 1 km of cable in kg)
c) Cable weight in kg/km Bidder to specify
d) Minimum bending radius 20 * Cable diameter

4.1.2.3 Average splice loss 0.05 dB / Splice

4.2 **JOINTING CLOSURES (for information only)**

Jointing closure shall be suitable for armored and unarmored optical fiber cables of all construction designs (slotted core, stranded tube, central tube). Jointing closures shall have 4 entry ports to allow entry/exit of four optical fiber cables. The same shall have provision of blocking/sealing of the ports, if not in use.

The fibers and their storage shall be managed with proper bend radius controls and protection. The fiber organizer trays shall have provision of maximum 6 fibers per tray. The trays should be hinged in such a manner that if moved about the hinge, the fibers Are not strained, kinked or stressed. Also, it should be possible to work on the fibers on one tray without disturbing the fibers o the other trays.

The jointing closure shall enable the metal parts of the cable and the internal metal parts of the closure to be maintained at earth potential.

The sealing of the entry ports, shall provide adequate sealing and shall be capable of withstanding an axial pull applied using 50 kg freely suspended weight of the cable, without using any additional clamps, etc.

Jointing closures should be Dust tight (No dust ingress) and protected against immersion in water (suitable for continuous immersion in saline water under 4-meter water-head). It should be complete with all accessories including splice cassettes splice protection and all other accessories including accessories for electrical continuity of metallic layer of optical fiber cable, etc along-with instruction sheets.

The jointing closures shall be form one of the following recommended sub-vendors:
1) 3 M, 2) Raychem, 3) Siemens

The complete jointing closures including trays, joint protection sleeves etc shall be sourcing form the above sub-vendors as a composite item.

4.3 SPECIFICATIOS OF PERMANTELY LUBRICATED CONDUIT:

The HDPE conduit shall be permanently lubricated with an inner layer of solid permanent lubricant by co-extrusion method to minimize the internal coefficient of friction. The co-extruded inner layer of above lubricant shall be continuous throughout the length of the HDPE conduit.
The HDPE conduits shall also be free of blisters. Shrink hooks, break and other defects. The internal and external pipe surfaces shall be smooth. Pipes shall not display any stress edged grooves or sink marks. The color of the pipes shall be orange and be uniform throughout. The HDPE conduit shall unroll off the drums without snaking or waving having zero coil set. Following are the mechanical and dimensional specifications of

HDPE conduit:

Pressure Rating	:	Min. 6 Kg/Cm^2
Outer diameter	:	4 0 mm.
Wall thickness	:	4.0 +/- 0.3 mm
Tensile strength	:	20 N/mm^2 or better
Density	:	940.0 – 950.0 kg/cum at 27° C
Melt Flow index	:	0.4 to 0.95 gm/10 minutes at 90° C under 5 Kg load
Intrinsic coefficient of friction	:	0.06 (max) when tested with respect to Nylon
Impact strength	:	As per IS: 12235 (part 9), 1986

The pipes should confirm to following IS specifications:

1. IS – 7328
2. IS – 9938
3. ASTM D – 1693
4. IS – 2530
5. IS – 4984

HDPE conduit identification :

The outer surface of the HDPE conduit shall be permanently & legibly marked with color in contrast to the outer sheath at regular intervals not exceeding one meter with name of client, name of manufacturer and part number. All the markings over HDPE conduit shall be such that it should not be erased during field use.
The outer surface of each completed cable shall have sequentially numbered metric length markers spaced at regular intervals of one meter.

5.0 OPTICAL FIBER LAYING PROCEDURE

The cables shall be tested by the bidder himself in the cable drums at the designated stores at site, before installation. The test results pasted on each drum and report to be submitted to site-in-charge.

The vendor shall carry out all works concerning the cable laying. The cable shall be laid always on the same side of the pipeline and any crossing of the pipeline shall be avoided. The trench dimensions shall be so taken as to ensure proper laying of the cable including slackness. Vendor

shall plan the cable-laying schedule such that the complete drum-length of cable can be laid without cutting in-between. The vendor shall prepare the cable drum schedule for this purpose.

DIRECT UNDERGROUND BURIAL:

The cable shall be laid in the pipeline trench on the right side of the pipeline in the direction of gas flow specified by Section in charge. The cable shall be laid in the pipeline trench as shown in Annexure Drawing.

Before laying the cable, 50 mm soft padding of sand or soft soil (riddled earth obtained by passing through a sieve having meshes not exceeding 15 mm^2, or of a natural soft ground not requiring ridding) shall be done as shown in the drawings.

The cable laying (including excavation of trench and installation of cable) shall follow pipeline lowering. The cable laying, testing and backfilling activities shall preferably be completed before land restoration (e.g. bund preparation, leveling) is started by the pipeline crew.

The cable can be laid using a mobile reel system or a fixed reel system depending on the characteristics of each section (excavation partially open, crossing etc.) The vendor shall establish section the ways and means for the cable laying taking into account characteristics of the layout.

1) In case of a mobile reel system, the cable shall be laid directly on the prepared bed. Only is special cases, the cable may be laid near the trench and later lowered manually. The reel support shall be locked in position on the carrier or other means of transportation, as to avoid any rotation on the vertical plane of the reel's axis.

2) In case of a fixed reel system, the traction stress shall not be more than the permitted resistance of the cable, prescribed by the cable manufacturer. The pin of the reel shall be put on the proper track. The unwinding shall be supported by hand.

The cable shall be laid near the trench and later lowered in the bed manually, as to avoid damage to the bed by the operators.

BLOWING / PULLING OF OPTICAL FIBER CABLE

Optical Fiber Cable will be blown into the laid HDPE conduit with the help of a compressor (with minimum pressure of 8 bar and maximum pressure of 12 bar) with flow rate of minimum $10m^3$/minute) and a blowing machine. The blowing method involves feeding of Optical Fiber Cable into the duct with the help of consistent high-pressure airflow, equally distributed along the entire cable throughout the duct. The Contractor has to ensure the safe blowing of OFC into the duct without any damage to the cable either internally. If at any stage of the project, any damage to the cable due to blowing process is identified, then the Contractor will be fully responsible for that has to ensure the rectification of the damage without any cost implications to the owner.
Optical Fiber Cable drum are available in the drum of 2/4 km nominal. There is possible that the Contractor may not able to blow this length continuously. in this case the Contractor should follow steps for safe blowing of OFC as the case may be:

For Example:-

1. Position the compressor and blowing machine at blowing pit C of 2 Km stretch before A & B as shown below:

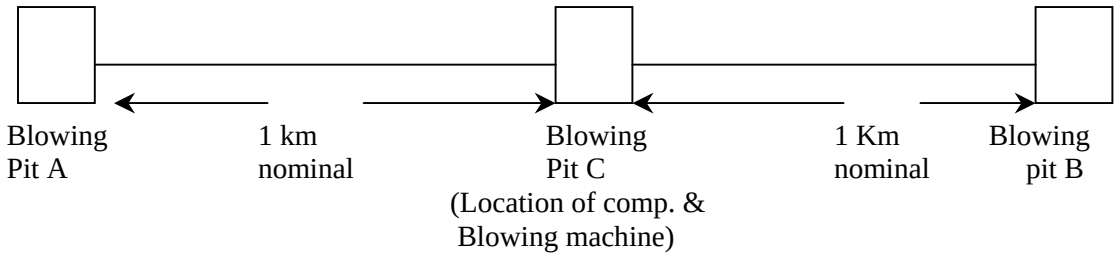

2. Uncoil ~ 1 Km of cable in a figure of eight configuration and blow towards blowing pit A and Coil 20 m of OFC in the blowing pit A. Now seal the duct end at location A with the help of cable sealing plug.

3. Coil 20 m of OFC in the blowing pit at location C and seal the duct end with the help of duct sealing compound.

4. Now uncoil the remaining Optical Fiber Cable from the drum in form of Figure of 8 to have an access to the other end of the cable.

5. Now blow this end of the cable towards the blowing pit B and coil 20 m of OFC in the blowing pit B. Now seal the duct end at location B with the help of cable sealing plug.

NOTE: Since the cable will be available in length of 2 or 4 KM +/- 5%, the cable length will accordingly vary. So, the Contractor has to plan the location of blowing pits before laying of HDPE conduit. The Contractor has to ensure that excess OFC is not coiled in the blowing pit and also Optical Fiber cable does not fall short of the location of blowing pit. The Contractor has to ensure the safe blowing of OFC for the complete stretch as shown in above figure. To achieve the blowing of above shown stretch, blowing should be carried out downhill wherever possible. The contractor has to do the preliminary survey for proper location of the blowing equipment so that the blowing lengths are not reduced.

CABLE BLOWING PIT /CABLE PULLING PIT

The cable-blowing pit shall enclose HDPE section ends from both sides at every 1-km nominal distance or as per direction of Engineer-in-charge. The cable-blowing pit shall be circular (Internal diameter ~ 1200 mm) and made of reinforced concrete with lifting lungs cast into the lids during contraction itself. The pit shall be provided with suitable arrangement for the entry of HDPE pipes (50/40 mm outer dia) from both side so that HDPE pipe should enter the pit at a height of 300 mm above the bottom level of the pit and to prevent entry of mud, insects etc.

CABLE JOINTING PIT

The cable blowing pit as described above will be used as Optical fiber Cable jointing pit every 2 or 4 km nominal distance because the OFC drum length is of 2/4 kM , so at every 2/4 kM nominal distance this pit will be used to enclosed the OFC jointing enclosed of OFC jointing enclosure. Contractor has to leave 20m coil of Optical Fiber Cable from both sides in to leave 20 m coil of Optical Fiber Cable from both sides in the jointing pit i.e. total 40 m of OFC will be coiled in jointing pit. Similarly the Contractor has to leave total 20 m of OFC in the blowing pit

SEALING OF HDPE CONDUIT AFTER BLOWING OF OFC

HDPE conduit will be selected with the help of cable sealing plugs after blowing of Optical Fiber into the duct at jointing pit locations. HDPE conduits will be sealed with the help of Cable Duct Sealing Compound after blowing of Optical Fiber cable into the duct at blowing pit locations.

Cable duct Sealing Compound should be no-toxic, vapor free and should not crack and fail due to vibrations in the duct to temperature changes. Not other sealing material is to be used by the Contractor to seal the ends of HDPE conduit with blown Optical Fiber cable at blowing pit location.

The blowing/ jointing pit will completely filled with sand upto 30 cm from bottom level if the pit prevent entry of rodents after blowing and jointing of OFC covering joint enclosure and HDPE conduits completely.

5.1 CROSSING

(Road, Railways, Nullah, Canal, Minar/ Major River Crossings Cased, Uncased, Marshy area or paddy fields.)

5.1.1 Cased Crossing

For pipeline crossing executed through using pipes or by boring/ jacking/HDD/Thrust Boring methods (Refer Annexure Drawing)

In case of crossing to be done with boring/ jacking/ HDD/ Thrust Boring the OFC shall be laid in HDPE conduit shall be Sub-contractor-ducted in a steel conduit. Easy-to-install cable sealing plug shall be used to seal the ends of the conduit to prevent the ingress of water, dirt and rodents, which may damage of OF Cable. The two ends of each conduit shall be sealed immediately after installation of Sub-contractor-ducts and re-sealed when the cable has been installed inside the conduit.

At bends and leading-in-points, a flexible PVC pipe may be used for protection and maintenance of the required bending radius of minimum 20 time outer diameter of the cable.

5.1.2 **Uncased Crossings:**

For pipeline crossing executed through open cut:

For these crossing bidder shall lay the cable through the HDPE conduit. Length of HDPE pipe shall be estimated with the help of survey documents & alignment sheets. For water crossings, HDPE conduit shall be used till ~5m of the normal underground trench depth on either side. The bank protection measure being provided for line pipe shall also be extended to take care of Optical Fiber Cable. For road crossings, the HDPE conduits shall be extended for minimum 3 meters on either side of the road. If casing is provided in open cut crossings then the OFC laying methodology shall be similar to as explain above.

5.2 **Terminal and Repeaters**

Inside the boundary walls of the terminals and repeaters, the Optical Fiber Cable (s) from each direction shall come to a common point & then shall be laid through HDPE conduit preferably along the wall of the station upto and inside the telecom room. The same shall be similar to Annexure Drawing but with cables/ conduit from both sides.

The HDPE pipe used for the leading-in of the Optical Fiber Cable into the telecom room shall be below the ground level without getting exposed outside (which shall be properly sealed after cable installation to avoid entry if rodents, insects, etc.). A 15m length of Optical Fiber Cable shall be kept in the telecom room to facilities termination.

3.3 **Tie-in Location**

At all tie-in location the Optical Fiber Cable shall be laid in a separate trench 3 meter away from the pipeline to avoid any damage to the Optical Fiber Cable. It shall be as per annexure drawing.

The Optical Fiber Cable trench shall extend to 5 meter on both sides of the tie-in locations. The Optical Fiber Cable shall be suitable routed in the separate trench at all tie-in-location considering minimum bending radius of the Optical Fiber Cable. At all these location, the cable shall be laid through HDPE conduits for protection.

5.4 **Joint Location**

The trench shall be enlarged at the splicing points as needed to carry out the splicing works. The enlargement shall be carried out on the same side of the conduits for protection.

5.5 **FIBER TERMINATION CLOSURE (FTC)**

5.5.1 **TERMINATION**

After entering the telecom room the cable shall be secured on `Steel Mesh' or `Wire Mesh' by the help ties (-15 cable being kept in turns in oval from) this mesh shall have suitable chemical

coating/ painted to prevent corrosion. In case of painting, the color shall march the wall color. Further, the cable shall be terminated of Fiber Termination Closure (FTC).

5.5.2 SPECIFICATIONS FOR FIBER TERMINATION CLOSURE

The FTC shall be wall-mounted type as suitable for the Optical Fiber Cable used for this project: (24 Fibers). The FTC shall give grounding arrangement for all the metallic layers of the cable. The cable shall be specified to pigtails on trays provided in the FTC. The connector side for the pigtails shall be secured with suitable coupler/ through adapter provided as integral part of the FTC itself. The FTC shall have trays suitable splicing maximum of 6 Fibers per tray. The arrangement inside the FTC should be simple and in straight line.

FTC should have entry points for a minimum of 2 No. of Optical Cable (armored/ non-armored) of diameter up to 20 mm with cable clamps to avoid entry of rodents/ dust in general. It should have a minimum of 2 Nos. of outlets for taking out 24 Nos. Pigtail. The outlets should have cable clamps. The FTC shall be from one of the following makes:

1) 3 M 2) Raychem 3) Krone.

The complete Fibre Termination Closure including trays, joint protection sleeves, pigtails, coupler etc. shall be sourced from the above sub-venders as a composite items.

5.5.3 GROUNDING

Grounding arrangement should be provided with the FTC. It should include as minimum 2 Nos. grounding shield bonds with nut and bolts for fixing to the armor of the OFC. 2 Nos. of grounding cable of green color with suitable length & lugs clamped to its end for connecting the armor of OFC with the grounding terminal of the FTC.

5.5.4 SINGLE MODE OPTICAL FIBER PIGTAIL & CONNECTORS TO BE USED IN THE FTC

The single mode fiber pigtails and connectors should meet the TU-T recommendations G-652 & G-655 as required.

Both connectors and cable should be robust and should withstand wear and tear due to frequent use, Connection and disconnection. Normal expected life should be 15 year or more.

Optical Fiber Cable, connections & pigtails shall be fully compatible and matching to each other.

6.0 LAYING OF PERMANENTLY LUBRICATED HDPE CONDUIT:

Permanently bid lubricated HDPE conduits shall be laid for installation of Optical Fibre Cable. The conduits shall be continuous in length of 1 km. The HDPE laying will follow lowering of pipeline. HDPE conduit should be laid in the pipeline trench bed along with OFC as per Dwg./Sketch enclosed. The duct shall be placed over 50 mm soft padding of sand or soft soil

(riddled earth obtained by passing through a sieve having meshes not exceeding 15mm^2, or of a natural soft ground no requiring riddling) as shown in the drawing.

Contractor has to ensure the laying of HDPE conduit without any snaking or waving and the HDPE conduit should rest on the trench bed i.e. the pipe should not hang n the trench bed. The trench will be back filled after ensuring the correct positioning of HDPE conduit as mentioned above. While back filling, the contractor has to ensure that the HDPE conduit is not hanging in the trench bed.

Following procedure should be followed for laying HDPE conduits:

(A) Moving Trailer Method:

This method should be used when the path of duct does not contain any road/railway bores or utility crossings. Following steps should be followed:

1. Fix the Jack Stand on the trailer properly.
2. Mount the duct coil reel/duct drum on the Jack stand.
3. Bring the trailer at the start point from where the duct is to be laid.
4. Move the trailer slowly along the trench route and uncoil the duct from the bottom of the reel/drum and place into the trench. Avoid any over spinning of the duct while uncoiling it from the drum.

(B) Manual Laying:

This method is used when there is an obstruction along the route. Following steps should be followed:

1. Place the Jack stand along the side of the trench. Place the drum on the jack with correct positioning of the drum i.e. the duct reel should uncoil from the bottom of the drum. Duct reel should not uncoil form the top of the drum.
2. Rotate the drum slowly so that the duct comes off the drum slowly and the duct reel should not overseen while pulling HDPE conduit for installation.
3. Unroll the duct to the required length spacing the workers after every 15 to 20 mtrs.
4. If any obstruction like utility crossings or road/railway crossings comes in then ensure the HDPE conduit is drawn under the obstruction or through the crossing without requiring joint in between.
5. The contractor can lay the duct into the trench either directly form the drum or temporally lay the duct along the trench and then place it later in the trench.

C) Tensioning of the HDPE duct after laying :

1. Determine the direction of installation and set the reel. Duct should be unrolled from the bottom of the coil.
2. Place the duct inside the trench.

3. Let two workers stand on the duct at start point and two other worker stretches the duct, thereby giving tension, upto of 30-40 meters.
4. After covering the 30-40 meter backfill the trench at that point to hold the duct in position and to avoid loss of tension.
5. Repeat the above procedure till the entire duct length of 1 KM laid with proper tensioning.
6. Backfill the entire trenches.

To lay the next HDPE duct drum length, couple the laid HDPE ducts to the new drum to be laid with the help of a coupler with same procedure explains above.

6.1 JOINTING OF HDPE CONDUITS:

In case of crossings there may be the possibility that laid HDPE section length may have to be joined to other laid HDPE section length. The jointing of two ends of HDPE conduit should strictly be done with the help of Coupler, which will be made of similar material. Installation of HDPE coupler to join laid HDPE conduits should strictly bee done with the help of C-spanners for proper tightening of Coupler. Joints may also likely to come up due to road/ river/ nallah/ railways crossing. All efforts shall be made to minimize joints. The coupling should be water and airtight and should be able to withstand minimum pressure of 10 bar. Following procedure should be followed for jointing HDPE conduits:

1. Cut the two ducts that are to be jointed at the same place where they overlap. Cutting should be done in such a way that the duct ends match with the coupler perfectly because is very important that coupling joints be airtight. Proper pipe shears or cutter must be used for smooth cutting Hacksaw should not be used to cut the duct.
2. Debar both the inside and the outside edges of the duct with a debarring tool.
3. Apply a small amount of proper lubricant for better installation of plastic coupler.
4. Tighten the plastic coupler with C-Spanner.

6.2 SEALING OF HDPE CONDUIT:

The Contractor shall supply and put end plugs to seal the end of HDPE ducts after laying of same to prevent ingress of sit, dust etc. Prior to back filling. The end plug should be made of similar material as that HDPE conduit does not change its position due to heavy impact of soils or due to any other cause.

6.3 HDPE CONDUIT TESTING AFTER LAYING:

HDPE conduits will be tested for proper laying, crush deformity and pressure testing. The Contractor shall be fully responsible for any obstruction and deformity in the laid HDPE conduit and shall have to remove the obstruction/ deformity of any kind before blowing Optical Fiber Cable into the duct. Following tests are to be carried out on the laid HDPE.

1) Duct Cleaning:

Following steps are to be followed for cleaning the laid HDPE conduit:

- Compressed air should be blown through the duct in order to remove any dirt and water that has accumulated inside the duct with the help of air compressor. A short blast of air of about 1 bar shall be blown through the duct for about 1 minute.
- Duct sponges will be blown through the duct to further remove any dirt and water from the duct segment. Sponges should be blown into the duct clean and a dry sponge comes out of the duct.

2) **Duct Calibration and integrity Test:**

- This test is to be done to check the roundness and the integrity of the duct. During installation or backfill process there is possibility of flattening, twisting or
  kinking of the duct. This testing process shall be conducted by blowing a plug or probe through the duct segment with compressed air.
- Calibration shall be done by a simple sender like small probe,which shall be blown through the duct by compressed air. This probe shall be detectable using a HF Detector.
- The calibration process shall be considered completed once the probe exits the duct at the other end after an uninterrupted pass.
- When obstruction in the duct are found, these obstruction have to be removed by removing the damaged or deformed portion of the duct and placing a new section of duct.

3) **Air Pressure Test :**

- A static pressure test is to be carried out in order to verify air tightness for the purpose of cable blowing as well as to prevent ingress of water or dirt during the lifetime of the duct.
- To verify the air tightness, pressure inside the duct should be brought up to 10 bar for two minutes. A pressure drop of 0 to 0.5 bar per minute of the test is acceptable. If a higher-pressure drop is detected, no further test should be conducted until the leak has been located and repaired.
- After pressure teasing duct ends should be sealed with the help of duct plugs to prevent entering of any dirt and water inside it.

After testing the duct any obstruction both the ends of HDPE conduit shall be plugged again using end plugs.

BACK-FILLING

250 mm padding of sand / soft soil shall be done covering the HDPE conduit and then a warning mat (PVC sheet, red color, warning in white, 150mm * 0.1mm in the Bidders scope) shall be placed. After proper padding of the warning mat for min 100mm, the trench shall be backfilled.

WARNING MAT

Bidder shall supply the warning mat as per the MECON Specification No. MEC/TS/05/62/042, Rev-0 and provide Warning mat before back filling. It is Bidder / vendor's responsibility to collect the information to be printed on the Warning mat before manufacturing. Vendor has to submit Sample print and the all test certificates as per specification to Owner /consultant for review before final dispatch at site. The supplier of the Mat shall have good reputation and past experience for similar job.

CABLE MARKERS

The Bidder shall make a 300mm diameter metal plate on the pipeline markers itself (at approx. every kilometer and at crossings). The Bidder shall suitably paint on these metal plates the following:

1. Optical fiber cable.
2. Cable progressive distance w.r.t. the repeater station. This repeater station shall be the one nearest to the progressive distance in the direction as specified by SIC.
3. Optical fiber cable length
4. Fiber Length.

A typical diagram of a joint marker is shown at Annexure, drawing. Cable markers shall be similar to the diagram except the description of joint number.

<u>RECONCILIATION</u>

For accounting of optical fiber cable, all cut pieces measuring in length of 100 meter and above when returned to Owner's storage points, shall be treated as serviceable materials. All cut pieces of cables measuring less than 100 meter will be treated as scarp.

For accounting of optical fiber cable following allowances shall be permitted:

a) The basic length of optical fiber cable will be the length of pipeline as per pipeline chainage and not cable length.

b) To take care of the terrain undulations and optical fiber cable slackness in trench and any unaccountable wastage including scrap etc., an allowance of 2% of pipeline length will be considered.

c) (1) At each planned jointing location, 40m of additional optical fiber cable length shall be considered. The same will not be considered for unplanned joints arising out of vendor negligence (not owner's requirement).

(2) At blowing pits (other than planned joint location) 20m of additional Optical Fibre Cable shall be considered.

d) At each repeater locations the following will be considered:

(1) From pipeline limit upto telecom building entry point in separate trench Actual length.

(2) Telecom building entry point into the telecom room-Actual length.

e) At manned locations the following will be considered:

(1) From station limit upto telecom building entry point in separate trench Actual length.

(2) Telecom building entry point into the telecom room-Actual length.

f) Serviceable materials (all cut pieces of cable Measuring 100 meter and above) subject to the following : </=0.25% of total cable length

1) Acceptable physical conditions i.e. no kinks, no exposure of armor.
2) Successful OTDR testing
3) Both ends being sealed using heat shrinkable end caps.

For unaccounted optical fiber cable not returned to owner after reconciliation, deductions of 1.25 times the landed cost of optical fiber cable will be made.

JOINTING

Each splice loss shall be $\leq$ 0.1 dB at 1310 nm.

In all the jointing locations (normal joints at the end of each drum as well as other joints) at least 20m of cable from each end of the cable shall be left surplus in a coiled. During jointing, electrical continuity of each of the metallic layer in the optical fiber cable shall be maintained.

After completion of each joint at site, it shall be tested for water proof-ness by immersing it is water along-with OFC for 5 minutes.

Jointing closures shall be issued to the vendor as a free issue material for all planner joints as per the approved cable alignment sheets. (Cable alignment sheets are to be submitted immediately after award of work for approval of owner/consultant). Jointing closures, jointing pits and all

accessories (along–with jointing, installation of joints, jointing pits etc. all complete) for unplanned joints shall be provided by the vender at their own cost.

The OFC coil shall rest on the floor of the pit after turns being secured with cable ties. The lid of the jointing pit should be ~1000mm below the ground level after installation. The HDPE conduit shall enter the pit at the bottom level of the pit. Proper arrangement should be done for protection of the cable at the entry points (Sealing of the HDPE conduit entry points at the jointing / blowing pits e.g. sealing of the cable entry points after cable installation).

Joint markers

All jointing locations shall be marked with proper identification markers. The Bidder shall supply fabricate and install the joint location markers. These markers shall be in line to the markers as given in Annexure Drawing/Sketch of this Bid document. The markers shall show the progressive joint No. and distance of the Joint as directed by site- Incharge. (SIC)

These markers shall be installed approximately 1mtr away from the jointing pit in the direction as per the instruction of SIC/Owner.

Electronic markers

Additionally, bidder shall provide electronic locating system suitable for field use to locate underground-buried Optical fiber cable joints.

The system shall consist of:

a) Electronic marker (to be buried underground along-with Optical fiber cable joints).
b) Marker locator (including probe & locator electronics).
c) The electronic markers shall be placed at all joint locations (planned and unplanned).

The electronic markers shall be lightweight and shall have a passive tuned resonant circuit, enclosed and sealed within a casing. The marker locator shall be able to locate the electronic markers from a distance of 2.2m minimum with the help of audio and visual signals. The markers shall be of color suitable for Oil & Gas application.

The marker locator and the probe shall be of lightweight and portable enough to be carried (in suitable carrying case, to be provided) on shoulder. The locator shall be able to work on batteries (dry alkaline) for continuously 8 hours.

The electronic locating system shall be able to work in saline atmosphere in coastal area and shall be protected against corrosion.

The electronic locating system shall not be affected by any metal, alternating current, etc. The casing of the electronic marker shall be resistant to chemicals, minerals, water ingress and

temperature variation normally encountered in underground environments. The material used for the manufacture of electronic markers shall be protected against any damage due to rodents or any other insects in the underground environment.

Each marker locator provided shall be complete with its set of accessories (i.e. necessary interfaces, connecting cables, software, etc.)

The electronic markers shall be buried underground 30 mm above the lid of the jointing pits and shall not be in direct contract with any metallic body.

SECTION 5 (GENERAL)

5.1 VENDOR DATA REQUIREMENT AND DOCUMENTATION
(Exclusively for OFC Telecom work)

a) Six sets of Documentation shall be supplied with each submission.
b) All documents shall be in English language only.
c) During engineering stage, owner/consultant shall review/approve drawings/documents to be mutually agreed with the vendor.

5.1.1 With each initial bid, the following documents shall be submitted (for information only) :

CV's of key personnel has to be associated in this project.

5.1.2 After the award of work, the Bidder for review and approval from Owner/Consultant shall supply the following documents in order to start cable laying at site:

1) Supply of cable alignment sheet.

Cable alignment shall comprise the following as a minimum.

i) Detailed measurement of length of optical fiber cable route along-with details of road, nullah, river crossings, high Tension lines etc.

ii) Location of Terminals, repeaters and planned joints.

For the sections where the cable route may leave the pipeline route, the vendor shall make a proper topographic survey to define the route and to determine the existence of over ground or underground services that could interfere with the installation. The vendor shall thereafter prepare a cable route sheet with proper scale showing the entire crossing and topographic details as needed to define the route and its characteristics.

2) Procedure for laying Optical Fibre cable through Permanently Lubricated HDPE conduit across any river / bridge.

3) Procedure for laying Optical Fibre cable through Permanently Lubricated HDPE conduit across Minor River, nullah and road crossing.

4) Optical fiber cable jointing procedure.

5) Quality Assurance program as requested and the following:

a) Daily optical fiber laying/ jointing/ testing report formats.
b) Approved documents for all the material to be used during optical fiber laying i.e. HDPE, warning mat etc.

6) Factory acceptance test procedure for HDPE conduit shall be provided.

7) Any other data, document not specifically mentioned, but required for the satisfactory completion, operation and maintenance of the system shall be provided.

5.1.3 Documents to be supplied before 'Final acceptance certificate' issued by Owner:

1) As built cable route sheets shall comprise the following as a minimum :

i) Location of joints, crossings.

ii) At each joint location.

a) Progressive optical fiber cable length, including the additional length at each joint location.
b) Fiber length, fiber length between joints, as measured by OTDR.
c) Progressive pipeline chainage.
d) Distance of joint from nearest pipeline markers & crossings, etc.

2) Final cable test reports (individual cable drums, hop to hop between repeaters, section and end to end).

3) All final documents for this project in electronic form.

5.2 VENDOR'S SITE OFFICE

Vendor's site office shall be capable of performing the following function :

a) Receipt of cable drums / equipment/goods at site, checking them for correctness and completeness, storage, transportation of good, etc.
b) Installation of the optical fiber cable in best engineering practice and workmanship.
c) Check out on proper installation.
d) Liaison with Vendor's head office.
e) Jointing, Testing and commissioning activities.
f) Conducting site acceptance testing to the satisfaction of owner.

5.3 QUALITY ASSURANCE PROGRAM:

a) Bidder shall submit the details of Quality Assurance Program followed by him. Bidder shall obtain and forward the Quality Assurance Program for material supplied by the Sub-Vender.
b) The Owner /Consultant reserves the right to inspect and test each material / equipment at all stages of production and commissioning of the system. The inspection and the testing shall include but not limited to raw materials, components, sub- assemblies, prototypes, final product etc.

c) For factory inspection and testing, Bidder shall arrange all that is required e.g. QA personnel, space, test equipments etc. for successful carried out of the jab by Owner / consultant at Bidder's cost at manufacturer's works. This excluded the costs of transportation, lodgings, boarding of the Owner / consultant.

d) It shall be explicitly understood that under no circumstances shall any approval of the Owner / consultant relieve the Bidder of his responsibility for material, design, quality assurance and the guaranteed performance of the system and its constituents.

e) Bidder shall invite the Owner / consultant, at least 15 days in advance, of the date at which system shall be ready for Inspection and testing. All relevant documents and manuals, approved engineering drawing etc. shall be available with Owner / consultant well in advance of the start of inspection and testing.

f) Owner / consultant or his representative shall after completion of inspection and testing to their satisfactions, issue factory acceptance certificate to release the equipments for shipment. No equipments shall be shipped under any circumstances unless a factory acceptance certificates has been issued for it, unless agreed otherwise by the owner / consultant.

5.4 TESTING & FINAL DOCUMENTATION

The following tests (in the same sequence) shall be conducted final acceptance of material / laid cable.

A1 Factory acceptance testing (if applicable)

A2 Regular Testing

A3 Site Acceptance Testing (SAT)

a) These tests shall be carried out on all material Equipment supplied by bidder including those supplied by sub vendors, if any

b) Bidder shall arrange all necessary test instruments, manpower, testing gear, accessories etc

c) All technical personal assigned by bidder shall be fully conversant with the system specification and requirements They shall have the specific capability to make the system operative quickly and efficiently and shall not interfere or be interfered by other concurrent testing, construction and commissioning activities in progress. They shall also have the capability to incorporate any minor modification / suggestion put forward by owner / consultant.

d) Power supply and any temporary commissioning facility including communication system required for installation / testing / commissioning of the material / cable laying etc. shall be arranged by the bidder.

e) TEST PLAN

Bidder shall submit to owner and consultant 'Test Plans " well in advance of commencement of actual testing in each of the above mentioned test categories (refer clause a)

The plans shall include:

i) Test to be conducted and purpose of test.
ii) Test procedure (including time schedule for the tests) and identification of test inputs details and desired test results.

f) Test Report

The observation and test results obtained during various tests conducted shall be compiled and documented to produce test reports by bidder. The test reports shall be given for each hop of the concerned section. The report shall contain the following information to a minimum.

1. Test Results
2. Comparison of test results with anticipated (as per specifications) test results as given in test plans and reason for deviation if any .
3. The data furnished shall prove convincingly that :

   a) The system meets the guaranteed performance objectives.
   b) Mechanical and electrical limits were not exceeded.

Factory Acceptance Testing for the Items to be supplied by the Bidder: (FAT if applicable)

Factory acceptance test shall be carried out after review and approval of FAT procedures/ documents and shall be conducted at the manufacturing facilities from where the respective material / subsystems are offered. The factory acceptance testing shall be conducted in the presence of the owner / consultant. The test shall be carried out on all equipment/ items including those supplied by sub vendors and factory acceptance certificates shall be issued. The factory test shall include but not limited to :

1. Mechanical checks to the equipment for dimensions, inner and outer supports, finishing, welds, hinges, terminal boards, connectors, cables, painting etc.
2. Check for assuring compliance with standards mentioned in the specifications
3. Individual check on each / module / sub-assembly in accordance with the modes and diagnostics programs of the bidder.
4. Environmental testing.
5. Functional tests.
6. Any other test not included in FAT document but relevant to the project as desired by owner / Consultant at the time of Factory acceptance testing.

Regular Testing:

After laying and jointing of cables and back – filling of the trench, the cable shall be tested for attenuation over the laid cable and log off the same in Daily optical fibber cable laying, jointing, testing format shall be maintained.

SITE ACCEPTANCE TESTING (SAT) & FINAL ACCEPTANCE.

Site acceptance testing for handing over of laid cable and HDPE duct shall be done in the presence of owner / consultant / telecom system vendor in the format provided by site in charge.

Upon successful completion of the ‘ Site Acceptance Testing ‘ any shortfalls when compared to the contract shall be made good by the vender.

The Bidder shall then provide as built documents as specified. After this, Owner / consultant shall notify the vendor in writing his final acceptance of the laid cable/Duct and the cable /Duct shall be considered ‘commissioned’. Bidder shall hand over to all free issued items after reconciliation to Owners store.

Nothing herein above provided, inclusive of the ‘Final Acceptance Certificate’ shall absolve vender of his full liabilities under the contract inclusion of and relative to the system performance and material Guarantee/warranty.

****

SPECIFICATION/ PROCEDURE

FOR

OPTICAL FIBRE CABLE TESTING

Specification No.: MEC/S/05/E5/T/002

MECON LIMITED

DELHI - 110 092

0	06.06.2005	Sudhir	Rakesh Shukla	Pankaj Shrivastava
Revision	Date	Prepared by	Checked by	Approved by

INDEX

1. TEST PROCEDURE

1.1 FIBRE LENGTH MEASUREMENT

1.1.1 Test Description

1.1.2 Test Equipment

1.1.3 Procedure

1.2 INSERTION LOSS MEASUREMENT

1.2.1 Test Description

1.2.2 Tools and Equipment required

1.2.3 Procedure

Appendices :

Appendix – 1 (A & B) : Test Format : Fibre Length Measurement

Appendix – 2 (A & B) : Test Format : Insertion Loss Measurement

TEST PROCEDURE

The Optical Fibre cable will be tested for its continuity and average loss in dB/km. The link will be tested and recorded in the format given in **Appendix-1 & 2.**

1.1 Fibre Length Measurement

1.1.1 Test Description

This test will check the continuity of the fibre from station to station and record the length of fibre. Average loss per kilometer of fibre length shown in dB/km shall be recorded for information only. Testing will be done from both ends and average will be calculated (for both 1310 nm and 1550 nm).

1.1.2 Test Equipment

1. Optical Time Domain Reflectometer (OTDR)
2. Patchcords, pigtails

1.1.3 Procedure

- Power on the OTDR and make the settings as required for the top under test.
- Splice a pigtail to one of the fibres
- Connect the OTDR with pigtail
- Make the laser ON and observe the trace till it gets settled up to the end of the trace.
- Store the results in the hard disk/floppy disk with proper identification of the fibre under test.
- Record the results in format
- Repeat the procedure for the Opposite direction.
- Test Formats are provided in **Appendix-1** (A & B)
- Repeat above steps for each fibre

1.2 Insertion Loss Measurement

1.2.1 Test Description

During the insertion loss measurement, light is launched (LASER) in the fibre by using a LASER source from one end at the other end by using an Optical Power meter the received is measured. Fibre loss is calculated by subtracting the receive power from the transmit power. This test also determines the fibre termination continuity on end to end basis as the measurement is done on both the ends of a link.

1.2.2 Tools and Equipment required

1. Power meter working on 1310 nm and 1550 nm
2. Laser source working on 1310 nm and 1550 nm

3. Patchcords (10 mtrs)

1.2.3 Procedure

- One power meter, one laser source and one unit of optical talk set are required at each end.
- At location A, switch ON the laser source, set it to operating wavelength of 1310 nm and connect it to the power meter (set at 1310 nm) by patch cord and record the laser power transmitted. Record it in the test sheet.
- Cut the patch cords, laser source & power meter remaining connected to the 2 halves of the patch cord (i.e. 2 pig tails).
- Splice each of the pigtails to two ends of the same fibre under test.
- Record the power received in test sheet
- To establish communication between two stations A & B, connect the Optical talk set to one of the fibre (for example fibre No. 24) at both the stations. When that particular fibre is next for testing connects the talk set to one on which testing is complete (for example fibre No.1).
- Confirm on the talk set that the power received is recorded.
- Repeats the test for 1550nm.
- Connect the source to next connector at Location A and Power Meter at Location B.
- Repeat the same procedure with source at Location B and Power Meter at Location A.
- Continue the above process till all fibres are tested
- Average loss of each fibre should be less than the average loss estimated.
- Test formats are provided in **Appendix-2** (A & B)

Appendix-1 A

FIBRE LENGTH MEASUREMENT

Date : _____

Location A : _____

Location B : _____

Wavelength : 1310 nm

Equipment used : _____

Tube No./ color	Fibre No./ Color	Fibre Length (m)	Optical loss dB/km From A	Optical loss dB/km From B
1. Blue	1. Blue			
	2. Orange			
2. Orange	3. Green			
	4. Brown			
3. Green	5. Slate			
	6. White			
4. Brown	7. Red			
	8. Black			
5. Slate	9. Yellow			
	10. Violet			
6. White	11. Pink			
	12. Aqua			
7. Red	13. Blue			
	14. Orange			
8. Black	15. Green			
	16. Brown			
9. Yellow	17. Slate			
	18. White			
10. Violet	19. Red			
	20. Black			
11. Pink	21. Yellow			
	22. Violet			
12. Aqua	23. Pink			
	24. Aqua			

Cable loss (average of above) : _____ km

(ALL LOSSES MEASURED IN dB/km)

Signature & date
(Tested & handed over by
Cable laying vendor for HDD)

Signature & date
(Witnessed & Taken over by
Main Line cable laying vendor)

Signature & date
Witnessed by Client/MECON representative (s)

Appendix-1 B

FIBRE LENGTH MEASUREMENT

Date : _____

Location A : _____

Location B : _____

Wavelength : 1550 nm

Equipment used : _____

Tube	Fibre	Fibre Length	Optical loss dB/km	
No./ color	No./ Color	(m)	From A	From B
1. Blue	1. Blue			
	2. Orange			
2. Orange	3. Green			
	4. Brown			
3. Green	5. Slate			
	6. White			
4. Brown	7. Red			
	8. Black			
5. Slate	9. Yellow			
	10. Violet			
6. White	11. Pink			
	12. Aqua			
7. Red	13. Blue			
	14. Orange			
8. Black	15. Green			
	16. Brown			
9. Yellow	17. Slate			
	18. White			
10. Violet	19. Red			
	20. Black			
11. Pink	21. Yellow			
	22. Violet			
12. Aqua	23. Pink			
	24. Aqua			

Cable loss (average of above) : _____ km

(ALL LOSSES MEASURED IN dB/km)

Signature & date
(Tested & handed over by
Cable laying vendor for HDD)

Signature & date
(Witnessed & Taken over by
Main Line cable laying vendor)

Signature & date
Witnessed by Client/MECON representative (s)

Appendix-2 A

INSERTION LOSS MEASUREMENT

Date : _____

Location A : _____ Location B : _____

Wavelength : 1310 nm Equipment used : _____

Cable Length from Appendix 1A : _____ km

Number of Splices (including Pigtails-N : _____

Number of connectors-C : _____

Average IL = 0.38L + 0.1N + 0.5C : _____ (estimated)

Tube No./ color	Fibre No./ Color	A-B Power Transmitted at A		B-A Power Transmitted at B		Average IL
		Power received at B	IL (A-B)	Power received at A	IL (B-A)	
1. Blue	1. Blue					
	2. Orange					
2. Orange	3. Green					
	4. Brown					
3. Green	5. Slate					
	6. White					
4. Brown	7. Red					
	8. Black					
5. Slate	9. Yellow					
	10. Violet					
6. White	11. Pink					
	12. Aqua					
7. Red	13. Blue					
	14. Orange					
8. Black	15. Green					
	16. Brown					
9. Yellow	17. Slate					
	18. White					
10. Violet	19. Red					
	20. Black					
11. Pink	21. Yellow					
	22. Violet					
12. Aqua	23. Pink					
	24. Aqua					

(ALL LOSSES MEASURED IN dB/km)

Signature & date
(Tested & handed over by
Cable laying vendor for HDD)

Signature & date
(Witnessed & Taken over by
Main Line cable laying vendor)

Signature & date
Witnessed by Client/MECON representative (s)

Appendix-2 B

INSERTION LOSS MEASUREMENT

Date : _____

Location A : _____ Location B : _____

Wavelength : 1550 nm Equipment used : _____

Cable Length from Appendix 1A : _____ km

Number of Splices (including Pigtails-N : _____

Number of connectors-C : _____

Average IL = 0.22L + 0.1N + 0.5C : _____ (estimated)

Tube No./ color	Fibre No./ Color	A-B Power Transmitted at A		B-A Power Transmitted at B		Average IL
		Power received at B	IL (A-B)	Power received at A	IL (B-A)	
1. Blue	1. Blue					
	2. Orange					
2. Orange	3. Green					
	4. Brown					
3. Green	5. Slate					
	6. White					
4. Brown	7. Red					
	8. Black					
5. Slate	9. Yellow					
	10. Violet					
6. White	11. Pink					
	12. Aqua					
7. Red	13. Blue					
	14. Orange					
8. Black	15. Green					
	16. Brown					
9. Yellow	17. Slate					
	18. White					
10. Violet	19. Red					
	20. Black					
11. Pink	21. Yellow					
	22. Violet					
12. Aqua	23. Pink					
	24. Aqua					

(ALL LOSSES MEASURED IN dB/km)

Signature & date
(Tested & handed over by
Cable laying vendor for HDD)

Signature & date
(Witnessed & Taken over by
Main Line cable laying vendor)

Signature & date
Witnessed by Client/MECON representative (s)

ELECTRICAL & INSTRUMENTATION SECTION

TECHNICAL SPECIFICATION

PERMANENTLY LUBRICATED TELECOM HDPE DUCT & ACCESSORIES
TS No. : MEC / TS / 05 / E5 / T / 037

Prepared & Issued By

MECON LIMITED
DELHI

1	11.11.2006	Modified as reqd.			
0	11.07.2005	First Issue	Vikas Jain	Rakesh Shukla	Pankaj Shrivastava
Revision	Date	Description	Prepared by	Checked by	Approved by

Contents

Sl. No.	Description
1.0	Scope
2.0	Reference Documents
3.0	PLB HDPE Duct Specification
4.0	PLB HDPE Duct Accessories
5.0	Inspection & Testing
6.0	Identification Marking
7.0	Type Approval and Acceptance Test
8.0	Storage at Manufacturing Works
9.0	Quality Assurance Plan and Testing
10.0	Vendor Data Requirement and Documentation
11.0	Packaging and Delivery
12.0	Enclosures:

1. Table – I : Scale of Sampling for visual and dimensional requirements.
2. Table – 2 : Sampling for Acceptance tests
3. Annexure – I : Oxidation Induction Test
4. Annexure – II : Internal Co-efficient of Friction

1.0 **SCOPE**

This specification covers the minimum generic requirement of permanently self-lubricated high Density Polyethylene ducts (PLB HDPE ducts) for use as underground conduits for optical fibre cables and associated accessories, suitable for installation of OFC by blowing technique.

The scope of work shall include supply of PLB HDPE ducts and the accessories as per the specification/ requirements given in this document.

However Optical Fibre Cable shall be laid in a permanently lubricated HDPE pipe using blowing technique.

1.1 Supply of special tools and tackles as mentioned in the bills of quantity.

1.2 Supply of complete technical literature and documentation as defined in Section 10.

1.3 Quality Assurance and testing as described at section 9, to the complete satisfactory of the Owner/ Consultant and/or third appointed agency.

2.0 **REFERENCE DOCUMENTS**

Unless otherwise specified, this document requires references to the latest standards of the following:

IS 2530	Methods for test for Polyethylene Molding Materials and Polyethylene Compounds
IS 4984	High Density Polyethylene Pipes for water supply
IS 7328	High Density Polyethylene materials for molding and extrusion
IS 9938	Recommended colours for PVC insulation for LF wires and cables
IS 12235 (Part – 9)	Methods of test for unplasticized PVC pipes for potable water supplies – Impact strength at 0°C
IS 14151 (Part – 1)	Ployethylene pipes for sprinkler irrigation systems (Part – I Pipes)
ASTMD 1693	Test method for environmental stress cracking of ethylene plastics.

3.0 **PLB HDPE Duct Specification :**

3.1 The PLB HDPE duct shall consist of two concentric layers, the outer layer being HDPE, co-extruded with an inner layer of solid permanent lubricant, to reduce the internal co-efficient of Friction (ICF). The lubricant shall be of a solid layer of uniform thickness so formulated to provide a permanent, low friction boundary layer between the inner surface

of the duct and Optical Fiber cable. The lubricant layer shall be clearly visible in cross-section, concentric with the outer layer.

3.2 Alternatively the duct can be of a homogenous construction (without a separate inner layer) meting all the requirements of this specification.

3.3 The PLB HDPE duct shall be supplied in a continuous length in coil form, suitable for shipping and handing purposes.

3.4 **MATERIAL**

3.4.1 **Two Layer Construction**

3.4.2 Outer Layer

The base HDPE rein used for the outer layer of the PLB HDPE duct shall conform to any designation of IS – 7328 or to any equivalent standard meeting the following requirements, when tested as per IS – 2530. However, the manufacturers shall furnish the designation for the HDPE resin as permanently IS – 7328 as applicable.

a)	Density	:	0.940 TO 0.958 g/cc AT 27°C
B)	Melt Flow Rate (MFR)	:	0.2 to 1.1 g/10 minutes at 190°C & 5 kg load.

3.4.3 Inner Layer

The inner lubrication material shall be of friction reducing, polymeric material which shall be integral with HDPE layer. The lubricant materials shall have no toxic or dermatic hazards for safe handling. In the finished PLB HDPE duct, the co-extruded layer of solid permanent lubricant shall be integral part with HDPE and shall be white in colour and clearly visible in cross-section of duct.

3.4.4 The inner layer of solid permanent lubricant shall be continuous all through and shall not come out during storage, usage and throughout the life of the duct.

3.5 **Homogenous Construction:**

The HDPE material used for this construction shall meet the requirements listed in clause 4.1.1, such that the finished duct shall satisfy the internal Co-efficient of friction (ICF) and all other requirements of this specification.

3.6 The raw material (s) used for the duct shall meet the following requirements :

i) The anti-oxidants used shall be physiologically harmless.

ii) None of the additives shall be used separately or together in quantities as to impair long term physical and chemical properties of the duct.

iii) Single pass rework material of the same composition produced from the manufacturer's own production shall be used and it shall not exceed 10% in any case.

iv) The raw material used for extrusion shall be dried the moisture content to less than 0.1%.

v) Suitable UV stabilizers shall be used for manufacturer of the duct to protect against ultra violet degradation, when stored in open for a minimum period of 8 months.

vi) The raw material used in the manufacturer of the duct shall be such that the service life of the duct and all its accessories can be expected to be more than 50 years including the life of permanent lubricant.

4.0 PLB HDPE DUCT ACCESSORIES

4.1 The following accessories are required for jointing the ducts and shall be supplied along with the ducts. The manufacturers shall provide complete design details, procedure for method of installation and type/ grade of the material used for the accessories. The qty. will be as per material requisition (MR).

a) ***Plastic Coupler***

It is used to couple two ducts. The design of this shall be simple, easy to install and shall provide airtight and water tight joint between the two ducts. The coupler shall ensure that the two ducts are butted smoothly without any step formation in the inner surface. The jointing shall meet the air pressure test of 10 kg/cm^2 for a minimum period of 2 hours without any leakage.

b) ***End Plug.***

This is for sealing the ends of the empty ducts, prior to installation of the Optical Fiber Cable and shall be fitted immediately after laying of the duct, to prevent the entry of any dirt, water, moisture, insects/ rodents etc.

c) ***Cable Sealing Plug***

This is used to seal the ends of the ducts perfectly, after the cable is installed in the duct, to prevent the entry of dirt, water, moisture, insects/ rodents etc. This is required at all places where cable has come out of the duct either for jointing or entry into the building as required. The sealing plug shall be capable of accommodating standard sizes of optical fibre cable taking into account the variation in diameter due to tolerance limits, etc.

d) ***End Cap***

This cap is made of hard rubber, shall be fitted into both ends of duct coil after manufacturing the duct. This shall avoid entry of duct, mud and rainwater into the duct during the transit and storage.

Note: The Accessories in clause 6.1 (b) and (c) shall be tested for air tightness with a pressure of 1 bar for 30 minutes. For carrying out the tests for the above accessories suitable length of duct shall be taken.

4.2 The following additional tools are required for jointing for the ducts and installation for optical fibre cable. These items can be procured as per the Manufacturer/ Supplier's specification, as and when required by the Owner.(This is required if exclusively mention in the Material Requisition).

a) ***Duct Cutter***

This is required to cut the duct ends squarely without any burr or notch.

b) ***C-Spanner***

This is required to tighten Plastic Coupler properly so as to ensure air/water tightness as specified above.

c) ***Blowing Equipment***

The equipment used for installing optical fibre cable by blowing technology shall be capable of pushing 1 km (minimum) cable into the duct with powerful air stream generated by a compressor. The compressor shall have the following characteristics:

Pressure	:	Min 8 bar Max. 12 bar
Flow rate	:	10 m^3/ minute

The mechanical feeder of the equipment shall not cause any damage to the sheath/ jacket of the optical fibre cable.

5.0 INSPECTION AND TESTS:

The manufacturer shall perform all inspection and test as per the requirements of this specification and the relevant codes, prior to shipment at this works. Such inspection and test shall be, but not limited to the following:

5.1 **Visual Inspection**

The ducts shall be checked visually for ensuring good workmanship that the ducts shall be free from blisters, shirks hole, flaking, chips, scratches, roughness, break and other defects. the ducts shall be smooth, clean, round. The ends shall be cleanly cut and shall be square with axis of the duct.

5.2 The colour of the duct shall be green and uniform throughout. Each duct shall contain 4 approximately equi-spaced continuous longitudinal stripes of width 3-mm minimum in white colour. These stripes shall be co-extruded during manufacturing. The material of the stripes shall be same as that of base compound for the duct.

5.2.1 In the case of two layer construction the inner layer (Soil Lubricant) shall be white in colour.

5.2.2 The colours of the duct, stripe and inner layer (in the case of two layer construction) shall be identifiable under normal lighting conditions and generally conform to IS-9938.

5.3 **Dimension of Ducts**

The nominal size of the ducts shall be 40/33 mm & 32/26 mm and shall meet the following requirements.

		40 mm/ 33 mm	**32 mm/ 26 mm**
a)	Outside diameter	40 mm + 0.4 mm	32 mm + 0.3 mm
b)	Wall thickness	3.5 mm ± 0.2 mm	3.0 mm ± 0.2 mm
c)	Standard length	1000 ± 100 mtr.	1000 ± 100 mtr.
d)	Maximum Outer Diameter of Optical Fiber Cable (OFC) that can be Installed by air blowing Technique	16 mm	12 mm

Note: Selection of duct size will depend on the outside diameter of the Optical Fiber Cable (OFC) to be installed.

5.4.1 Tensile Strength and Elongation

The samples removed from the PLB HDPE ducts when tested as permanently IS-14151 (Part – I) shall meet the following requirements.

Tensile Strength	:	Min 20 N/mm^2
Elongation	:	Min. 350%

5.4.2 Reversion Test:

The test shall be carried out as per IS-4984. For this purpose, a duct length of 200 mm shall be placed horizontally in an air-oven or a suitable liquid bath on a support at 110 ± 2°C for 60 minutes so that the dimensional change in duct section are not impeded. After cooling to room temperature the dimensional change of the duct section shall be measured in the longitudinal direction and the deviation from the initial length shall be calculated and stated in percentage. The dimensions shall not changes by more than 3% in the longitudinal direction.

5.4.3 Environmental Stress Crack Resistance Test:

The specimen cut from the PLB HDPE ducts shall meet the environmental stress cracking as described in ASTM D-1693, when tested with 10% Igepal (CO 630) solution at 50 ±1°C for 96 hours. There shall be no failure.

5.4.4 Impact Strength Test:

The test has to be carried as per IS-12235 (Part – 9). A sample duct 150 mm in length shall be placed on heavy rigid block whose faces are at an angle of 120°. A striker with a hemispherical nose of 13 mm radius and loaded to a total weight of 10 kg shall be allowed to fall freely in a suitable vertical guides through a height of 1.5 m before striking the duct. The line of fall of the striker shall coincide with the diameter of the duct. The duct shall not crack or split.

5.4.5 Crush Resistance Test :

Samples of duct of 150 mm ± 2 mm in length shall be subjected to a dead load of not less than 50 kg for one minute and shall be allowed to recover for 5 minutes. The deflection with load on and after recovery period shall not exceed 10% and 2% respectively.

5.4.6 Mandrel Test:

A 150 mm long mandrel of diameter, 3 mm less than the internal diameter of the duct shall be passed through a 5 meter length of duct, freely throughout the length, when the duct is bent to a radius of 5 meters.

5.4.7 Ovality Test:

Ovality is the difference between maximum outside diameter and the minimum outside diameter at the same cross-section of the duct, at 300 mm away from the end. The ovality for 40/33 mm and 32/26 mm ducts, when measured as per IS_4984 shall not exceed 1.4 mm and 1.3 mm respectively.

5.4.8 Coil Set Test :

The PLB HDPE duct shall unroll of the drums without snaking or waving having zero coil set. Thus the duct shall lay straight into the trench without re-coiling. For this purpose, when a minimum length of 50 meters duct taken from the coil and laid on the ground, it shall be straight without any bends or kinks and without deformation, except 5 meters from each end.

5.4.9 Oxidation Induction Test:

The induction time in oxygen when tested with a copper pan as per method in Annexure – I, shall not be less than 30 minutes.

5.4.10 Hydraulic Characteristics :

The duct shall be tested for internal pressure creep rupture test as per IS-4984. For this purpose, a sample length of 10 times the outside diameter of the duct shall be taken. At the end of the test, the sample shall not shown signs of localised swelling or leakage and shall not burst during the test duration. The test showing failure within a distance equivalent to the length of end cap from the end shall be disregarded and the test repeated. The test temperature and the duration of the test shall be as follows:

Test	Test Temp °C	Test Duration (Hrs.) (Min, holding time)	Induced Stress (Mpa)
Type Test	80	165	3.5
Acceptance test	80	48	3.8

5.4.11 Internal Co-efficient of Friction:

The internal Co-efficient of Friction when tested as permanently method in Annxurer – II, shall not exceed 0.06, when tested with respect to Nylon jacketted unarmored Optical Fiber Cable i.e., 24 F Fiber or 12 F as required.

5.4.12 Optical Fiber Cable Blowing Test:

For this test an Optical fiber Cable of a diameter nearest to the diameter indicated in this specification, relevant to the size of duct under test shall be installed by blowing of the cable in a length of 1 km of the duct. The duct shall be laid with bends in the horizontal

and vertical planes and a raise in the middle. The 1 km section shall include two couplings at suitable locations.

The OFC shall then be blown out. It shall be inspected for any visual damage. The OFC shall then be blown in again.

It shall be possible to blow in the Optical Fiber Cable through the 1 km duct, each time in not more then 30 minutes. There shall be no visible damage to OFC.

The test will be conducted on two samples out of the five submitted for Type Approval.

5.4.13 Owner/ Consultant reserves the right to perform stage – wise inspection and witness tests as indicated above at manufacturer's works prior to shipment. Manufacturer shall give reasonable access and facilities required for inspection to the Owner / Consultant Inspector.

Owner/ Consultant reserved- the right to require additional testing at any time to confirm or further investigation a suspected fault. The cost incurred shall be to manufacturer's account. In no case shall any action Owner/ Consultant or his Inspector relive the manufacturer of his responsibility for material, design, quality etc. Inspection and test performed / withered by the Owner/ Consultant Inspector shall in no way relieve the manufacturer's obligation to perform the required inspection and test.

5.4.14 Test Certificate

Manufacturer shall submit all the test report of the test performed as per above requirement.

The certificates shall be valid only when signed by Owner/ Consultant Inspector. Only the certificate material shall be dispatched from manufacturer works.

6.0 IDENTIFICATION MARKINGS

The duct shall be prominently marked with indelible link, with the following information at intervals every meter to enable identification of the pipe. The size of ink markings shall be distinct, clearly and easily visible.

- Client Name
- Client Logo
- Manufacturer's Name (Also can be abbreviated form)
- Name of the duct with size
- Machine number/ specific serial number of the duct
- Date of manufacturing
- Sequential length marking at every meter.

7.0 **TYPE APPROVAL AND ACCEPTANCE TEST :**

7.1 All the tests mentioned in this document shall be carried out on the 5 standard lengths of ducts and the samples must pass these tests before according the type approval. The supplier shall furnish 5 standard length for carrying out these tests for according type approval. Bulk manufacturer and supply shall start only after issue of type approval. The type approval certificate shall clearly indicated the type/ grade/ source of high-density polyethylene raw material, the size of the duct and the construction of the duct i.e., Two layer of Homogenous.

7.2 Fresh type approval shall be obtained whenever grade/ source of raw material HDPE resin or Solid Lubricant is changed.

7.3 **Acceptance Tests**

7.3.1 The acceptance tests shall be carried out on samples from the lot as per Table – 1 for Dimensional and Visual requirements. The requirements for Tensile Strength & Elongation, Reversion Test, Environmental Stress Crack resistance, Impact Strength, Crush resistance, Oxidation Induction Test, Hydraulic Characteristics and internal Co-efficient of Friction shall be carried out as per Table – 2.

7.3.2 The Owner at his discretion at any point of time can modify the acceptance tests and the sampling plan.

8.0 **STORAGE**

All the material shall be stores in the manufacturer's premises in such a manner that it will not affect the performance of the product.

9.0 **QUALITY ASSURANCE PROGRAM & TESTING**

9.1 **Quality Assurance Program**

a) Vendor shall submit the details for Quality Assurance Program followed by him beginning with raw materials, fabricated components, assemblies, etc., to finished product (AS Applicable). Vendor shall obtain and forward the Quality Assurance Program for equipment supplied by Sub-contractor.

b) The Owner/ Consultant and/ or third appointed agency reserves the right to inspect and test duct and accessories etc. at all stages of production and testing. The inspection and testing shall include but not be limited to materials, sub-assemblies, prototypes, produced units, guaranteed, performance specifications etc.

c) For factory inspection and testing, vendor shall arrange all the is required e.g., quality assurance personnel spaces, test gear etc., for successful carrying out of

the job by the Owner's respectively at vendor's cost at the vendor's/ Manufacturer 's works.

d) Owner's representatives shall have free entry and access to any and all parts of the Vendor's facilities associated with manufacturing and testing of the system at any given time.

e) It shall be explicitly understood that under no circumstances shall any approval of the Owner or his representatives relieve the vendor of his responsibility of material, design, quantity assurance and the guaranteed performance of the system and its constants.

f) Vendor shall invite the Owner/ Consultant, at least 30 days in advance, of the date on which material shall be ready for inspection and testing. All relevant documents and manuals approved engineering drawings, etc shall be provided to the Owner's / consultant's representative's well in advance of the start of inspection and Testing.

g) Owner/ Consultant shall, after completion of inspection and testing to their satisfactory, issues factory acceptance certificate to release duct / accessories for shipment. No. Duct / accessories shall be shipped under any circumstances unless a factory acceptance certificate has been issued for it, unless agreed otherwise by Owner/ Consultant.

h) **PLB HDPE Duct Testing**

Factory testing shall be conducted for acceptance of the duct at the manufacturing facility, wherefrom duct is offered for this project before final acceptance, as per the approval test plan

i) **Accessories Testing :**

Accessories shall be tested before final acceptance, as per the approved test plan.

j) **Test Instruments :**

i) Vendor shall arrange all test equipment's/ instruments, manpower, test-gear, accessories etc. necessary for testing.

ii) All technical personnel assigned by vendor shall be fully conversant with the system specifications and requirements. They shall have the specific capability to make the system operative quickly and efficiently and shall not interface or be interfered by other concurrent construction and commissioning activities in progress. They shall also have the capability to incorporate any minor modification/ suggestions put forward by Owner/ Consultant.

iii) Power supply required for testing shall be arranged by the vendor

iv) *Test Plane*

Vendor shall submit to owner and consultant 'Test Plans' well in advance of commencement of actual testing.

The plans shall include:

- Functional and performance description (in short) and tests to be conducted and purpose of test.
- Test procedures (including time schedule for the tests) and identification of test inputs details and desired test results.

v) *Test report*

The observation and test results obtained during various tests conducted shall be complied and documented to produce test reports by vendor. The test reports shall be given for each equipment / items and system as a whole. The report contain the following information to a minimum/

vi) *Test Results*

- Comparison of tests results with anticipated test result as given in test plans and reasons for deviations if any,
- The data furnished shall prove convincingly that:
- The system meets the Guaranteed performance objective.
- Mechanical/ Optical/ Electrical limits were not exceeded.
- Failure profiles during the tests are well within the specified limits.

10.0 VENDOR DATA REQUIREMENTS AND DOCUMENTATION

10.1 All the documents shall be is English language only.

10.2 Six sets of documents shall be supplied with final submission.

10.3 With the initial bid, the following documents shall be submitted

i) Duct Construction Details and Duct Life.
ii) Accessories Details.
iii) Technical Literature etc.

10.4 Following documents shall be supplied to Owner/ Consultant in order to start Factory Acceptance Testing

a) For Review Approval

i) Detailed Testing procedure for Duct.
ii) Detailed test procedure for accessories
iii) Quality assurance program
iv) Any other data/ documents not specifically mentioned but required for the satisfactory completion of the work

b) For Information

i) Detail technical Literature and manuals for duct & accessories
ii) Installation, Maintenance & Operation Instruction Manual for all the supply items

11.0 PACKAGE AND DELIVERY

The store shall be supplied in coils of suitable size for delivery in such a manner that they arrive at their distribution in a safe and undamaged condition and will permit the loading, unloading and handing the stores using standard moving equipment. The minimum inner bending diameter of technical coiled duct shall be 25 times the outer diameter of the cut. The material used for packaging wrapping sealing, moisture, resistant, corrosion prevents etc. as per applicable shall be of recognized brands and shall conform to best standards for packaging. The packing shall protect the material from impact vibration rough handling rain, dust, damp, insects, rodents etc., Each packing should have packing slip and test dispatch clearance documents.

Table – 1

SCALE OF SAMPLING FOR VISUAL AND DIMENSIONAL, REQUIREMENTS

No. of coils (Duct) in the Lot	Sample No.	Sample Size	Cumulative Sample Size	Acceptance No.	Rejection No.
(1)	(2)	(3)	(4)	(5)	(6)
Up to 150	First	13	13	0	2
	Second	13	26	1	2
151 to 280	First	20	20	0	3
	Second	20	40	3	4
281 to 500	First	32	32	1	4
	Second	32	64	4	5
501 to 1200	First	50	50	2	5
	Second	50	100	6	7
1201 to 3200	First	80	80	3	7
	Second	80	160	8	9
3201 to 10000	First	125	125	5	9
	Second	125	250	12	13
10001 to 35000	First	200	200	7	11
	Second	200	400	18	19

Criteria:

The number of ducts given for the first sample in Column 3 shall be examined for dimension and visual requirements. A duct failing to satisfy any of these requirements shall be considered as defective. The lot shall be deemed to have satisfied these requirements, if the number of defectives found in the first sample are less than or equal to the corresponding acceptance number given in Column 5. The lot shall be deemed not to have met these requirements of the number of defectives found in the first sample is greater than or equal to the corresponding rejection number given in Column 6. If, however, the number of defectives found in the first sample, lies between the corresponding acceptance and rejection numbers given in Column 5 and 6, the second sample of the size given in Column 3 shall be taken and examined for these requirements. The lot shall be considered to have satisfied these requirements, if the number of defectives found in the cumulative sample is less than or equal to the corresponding acceptance number given in Column 5 otherwise not.

TABLE – 2

SAMPLING FOR ACCEPTANCE TESTS

A separate sample size for each of the tests shall be taken as stipulated at random from the samples already examined for dimensions and visual inspection. All the ducts in each of the sample size shall be tested for compliance for the requirements for as per clause no. 5.4 of technical specification:

(a) Tensile Strength & Elongation
(b) Reversion Test
(c) Environmental Stress Crack Resistance
(d) Impact Strength
(e) Crush Resistance
(f) Oxidation Induction Test
(g) Hydraulic Characteristics
(h) Internal Co-efficient of Friction

The lot shall be considered to have met the requirements of these tests, if none of samples tested fails.

No. of Coils	Sample Size
Up to 150	3
151 to 1200	5
1201 to 35000	8

Annexure – I

OXIDATION INDUCTION TEST FOR PLB HDPE DUCT

1.0 A short length of completed duct (approximately 30 cm) shall be sealed at the ends and placed in an oven at temperature of 68 ± 1°C for 8 hours. The sample shall then be allowed to cool at room temperature for at least 16 hours. The sample shall be clean and dry. The sample shall then by tested by means of a Differential Scanning Calorimeter (DSC) or by Differential Thermal Analyser (DTA).

2.0 **INSTRUMENT TEST PROCEDURE :**

2.1 **Cell cleaning**: The cell shall be held at approximately 400 °C for 10 minutes in Nitrogen. The cell shall be cleaned after standing over night and between testing of different formulations.

2.2 **Temperature Calibration**: This has to be done according to the instrument manual. The temperature scale should be adjusted until the determined melting point of pure Indium metal is 156.6 °C at a heat rate of 5 °C per minute or any other heat rate as indicated in the manual of the equipment is permitted.

2.3 **Copper Pan Preparation**: Prepare fresh oxide coatings by holding the pan in the flame of Fisher burner until it begins to glow (about 3 seconds). Remove the pan from the flame and immediately cool in a gentle stream of air. A fresh pan shall be used for each test, and the copper shall be of electrolyte grade.

2.4 **Sample Preparation**: Take the sample weighing about 5 mg from the duct conditioned as indicated above. Position the sample in the center of the copper pan. Cover with clean 316 stainless steel screen (40 mesh) and crimp the pan.

2.5 **Nitrogen Purge**: Place the sample pan and reference pan in instrument cell. Flush for 5 minutes with cylinder of nitrogen (99.6% extra dry grade) at 60 ± 10 cc per minute.

2.6 **Oxidation Test**: Rapidly increase the temperature of the sample (20 °C /min or greater) from 100 °C or lower initial temperature to 199 ± 1°C. After thermal equilibrium is obtained (steady recorder signal) switch to 80 ± 20 cc per minute oxygen flow and simultaneously start time-base recording. The oxygen used for the test should be equivalent to or better than 99.9% extra dry grade.

2.7 **Induction Period**: The oxygen induction point shall be recorded as time zero, and the chart speed shall be sufficient to provide a clearly discernible slope at the start of the exothermic reaction. The test in the pure dry oxygen atmosphere shall continue until the exothermic peak is produced. The intersection of the tangent of the exothermic sloped line with the extended base line will be drawn. The time form time zero to this intersection point is read from the base line and recorded as the oxidative induction time.

Anenxure – 2

INTERNAL CO-EFFICIENT OF FRICTION TEST FOR PLB HDPE DUCT

1. **SCOPE:**

These procedure details the method employed to determine internal friction properties of the duct.

2. **APPARATUS :**

Extensometer machine, circular test fixture of diameter 750 mm (capable of having secured to it), 25 kg weight, optical fibre cable and pulley wheel.

3. **METHOD:**

a) A suitable length of the duct, per-conditioned at 23 ± 2°C for 2 hours, shall be secured to the text fixture such that the sample completes a 450°C wrap. With one end extending vertically 200 mm towards the floor.

b) A suitable length of optical fibre cable shall be inserted into the sample.

c) The extensometer and the test fixture shall be aligned and secured from movement.

d) The 25 kg tail weight shall be attached to the optical fibre cable extending from the 200 mm vertical extension of the sample such that there is a minimum free travel of 150 mm for the weight.

e) The other end of the optical fibre cable shall be attached via a pulley, to the extensometer such that the planes of travel are in no direction diagonal and there shall be slack remaining in the optical fibre cable.

f) The extensometer shall be operated, and the maximum load applied, in lifting the 25 kg weight to a minimum travel of 150 mm shall be noted.

g) Extensometer conditions
Load : kg or Newtons
Speed : 500 mm / minute
Mode : Tension

4. The co-efficient of friction shall be calculated by the following equation:

Internal Co-efficient of Friction (ICF) = $\log_e (T1/T2) / Q$

Where, T1 = Pulling force in kg;

T2 = 25 kg

Q = Angle of the subtending are between T1 & T2 in radians (i.e. 450 ° = 7.85398 radians)

****

TECHNICAL SPECIFICATION FOR

OPTICAL FIBRE CABLE
&
ASSOCIATED ITEMS

Technical Specification No. :
MEC / TS / 05 / E5 / T / 096

Prepared & Issued By

MECON LIMITED
DELHI

Revision	Date	Descriptions	Prepared by	Checked by	Approved by
4	16.08.2017	Revised spec. & reissued	RG	VJ	PS
3	18.06.2015	Revised spec. & reissued	RG	VJ	PS
2	24.02.2011	Revised spec. & reissued	VJ	RS	PS
1	16.03.2007	Revised spec. & reissued	VJ	RS	PS
0	28.03.2006	First issue	Harsha	Vikas Jain	Pankaj Shrivastava

INDEX

1.0 INTRODUCTION

2.0 DATA TO BE FURNISH BY THE BIDDER

3.0 SCOPE OF WORK

4.0 DESIGN OBJECTIVES AND GUIDELINES

4.1 Standards applicable

4.2 Approval of documents

4.3 General Guidelines

5.0 SUB SYSTEM SPECIFICATIONS

5.1 Optical fibre cable

5.2 Jointing Closures with accessories (Refer MR)

6.0 GENERAL SPECIFICATIONS

6.1 Vendor data requirements & documentation

6.2 Packing

6.3 Quality Assurance Programme & Testing

Annexure '1' : Suggestive Cable Construction for 24 count CSTA Optical Fibre Cable

Annexure '2' : Suggestive List of Special Tools and Tackles for OFC (refer MR)

Annexure '3' : DATA TO BE FURNISH BY THE BIDDER ALONG WITH BID

1.0 **INTRODUCTION** :

1.1. The purpose of this specification is to define the outline requirement of an Optical Fiber (OFC) System for the Telecommunication requirements which is most suitable for cross country pipeline project.

It is proposed to procure 24 fibre OFC, corrugated steel tape armored cable designated for Blowing through Telecom Duct and direct burial application to meet the telecommunications requirements. The OFC shall be blown into the self-lubricated HDPE Duct directly using "Blowing Techniques". The cable manufacturing shall be such that it should be suitable for the blowing in Telecom Duct.

1.2. In case of any conflict between the specifications, enclosed suggested construction drawing, data sheets, related codes and standards etc, vendor shall refer the matter in writing to the purchaser, and shall obtain clarification in writing before starting the manufacturing/constructing OFC.

1.3. Vendor shall be responsible for selection of best materials to meet the purchaser's specifications. In case of any modification / change in materials supplier / QA & QC requirement later date to meet the Purchaser's Specifications, the same shall be done by the vendor without any price and delivery implications.

2.0 DATA TO BE FURNISHED BY THE BIDDER:

(Bidder shall furnished this information at the time of their offer otherwise their offer may be rejected / disqualified for OFC work) Enclosed as Annexure – 3.

3.0 SCOPE OF WORK

3.1.1 As part of scope, it is desired to supply necessary OFC and associated items (refer Material Requisitions), as a total responsibility for Design, Engineering, Manufacturing, Testing and Supply Supply including transportation to the designated stores, loading & unloading complete in all respect as per the specifications provided in the Bid documents.

The Scope of work shall include supply of optical fibre cable, Joint closure and Tools as per the specification / requirement given in this document (refer Material Requisitions, to be supplied as per the scope of MR)

The fibre for the cable can be procured from any reputed fibre manufacturer and the inspection of the offered fibre shall be carried out at the premises of fibre manufacturer or cable manufacturer by the bidder and inspection by owners at Owner's prerogative.

Compliance with the requirements of this specification does not relieve the Supplier of the OFC of proper design, meeting all the specified rated operating and service conditions.

The fibre for the cable can be procured from any reputed Optical Fibre manufacturers but preferably from one of the followings:

1. Lucent
2. Fujikura
3. Corning
4. Alcatel
5. Sumitomo
6. Furukawa
7. Sterlite

Optical fibre shall meet all the technical specification mentioned in the tender documents. Owner / MECON reserve the right to check the technical properties of the fibre prior to fabrication/ manufacturing of cables. Supplier has to offer the fibre for inspection either in the premises of fibre manufactures/ cable manufactures or wherever testing facility exists. Bidder has to witness the same, however, Owner / MECON reserves the rights to get the optical fibre tested for its technical parameters from any recognized independent test houses in India and abroad.

3.1.1.1 Design, Engineering, Manufacture, Testing and supply of Corrugated steel tape armoured (CSTA) or Electrolytically Chrome Plated Low Carbon Steel Armoured (ECCSA) optical fibre cables as follows:

Multi-grade cable of 24 fibre counts, out of this 6 fibre counts are ITU-T G.655 and 18 fibre counts are ITU-T G.652 D specification embedded in one cable suitable for direct underground burial application or Blowing. However OFC also shall be laid in a permanently lubricated HDPE Telecom duct using blowing techniques.

3.1.1.2 Manufacture/Procurement, Testing and supply of suitable Joint closures including all necessary accessories of any of the following make:

i) 3M
ii) Siemens
iii) TE Connectivity India Pvt Ltd
iv) Any other make from the approved vendor list of client with supporting paper

(To be supplied if requested in Material Requisition / Price Schedule)

3.1.1.3 Supply of Special Tools and Tackles as mentioned in the Bill of quantity. The Tools & Tackles to be supply for the joints closures should be from the same manufacturing as that of the joint closures.

(To be supplied if requested in Material Requisition / Price Schedule)

3.1.1.4 Supply of complete technical literature and documentation as defined in Clause 6.1.

3.1.1.5 Quality Assurance and Testing as described at Clause 6.4 to the complete satisfaction of the Owner/MECON &/or third appointed agency.

4.0 DESIGN OBJECTIVE AND GUIDELINES

4.1 STANDARDS APPLICABLE

The OF cable/materials provided shall conform to the latest editions of standards like ITU-T, TIA, IEC, EIA, ASTM & BS.

International Electro-technical Commission (IEC)

IEC 60092-3	Electrical Installations in Ships & semi; Part 3: Cables [Construction, Testing and Installations] Second Edition & semi; Amendment 1-1969 & semi; Amendment 2-1971 & semi; Amendment 3-1973 & semi; Amendment 4-1974 & semi; Amendment 5-1979 & semi; Amendment 6-1984
IEC 60502	Extruded Solid Dielectric Insulated Power Cables for Rated Voltages from 1 kV up to 30 kV First Edition

International Organization for Standardization (ISO)

ISO 9001 Quality Systems - Model for Quality Assurance in Design/Development, Production, Installation and Servicing

ISO 9003 Quality Systems - Model for Quality Assurance in Final Inspection &Test

ISO 9004 Quality Management and Quality System Elements – Guidelines

Electronic Industries Association (EIA)

EIA TIA-455 Standard Test Procedure for Fibre Optic Fibres, Cables, Transducers, Sensors, Connecting and Terminating Devices, and Other Fibre Optic Components

EIA TIA-492AAA-A Detail Specification for 62.5-Micrometer Core Diameter/125-Micrometer Cladding Diameter Class Ia Graded-Index Multimode Optical Fibres

EIA TIA 492AAA Detail Specification for Class IV a Dispersion-Unshifted Single-Mode Optical Fibres

International Telecommunications Union

ITU-T G650 Definition and test methods for the relevant parameters of single mode fibres – Series G

ITU-T G651 Characteristics of a 50/125 micrometer multimode graded index optical fibre cable – Series G

ITU-T G652 Characteristics of a single mode non-dispersion – shifted optical fibre cable – Series G

ITU-T-G655 Characteristics of a single mode non-zero dispersion – shifted optical fibre cable – Series G

Telecordia GR-20 - Core specifications.

The optical fibre cable / materials provided shall conform to the latest editions of standards like ITU-T, TIA, IEC, EIA, ASTM & BS

In case of any conflict between the above standards and the specifications, the matter shall be referred to OWNER/MECON.

Vendor shall proceed with design of the cable/equipment only after obtaining clarifications from OWNER/MECON in all such cases.

4.2 APPROVAL OF DOCUMENTS

The vendor shall be completely responsible for the successful completion of the job. However, to ensure a good quality of workmanship, as also of the offered system, vendor shall prepare and submit the documents (as per clause 6.1 of section 6) to be approved by the OWNER / MECON.

Vendor shall proceed with the manufacture / procurement / installation of the respective materials and/or equipments only after obtaining the necessary approval from the Owner/MECON.

4.3 **GENERAL GUIDELINES**

a) Vendor shall be totally responsible for quality of offered Optical Fibre, cable/materials/equipments till the life as define in the tender.

b) OWNER/MECON reserves the right to modify/revise/alter the specifications of cable/equipments prior to acceptance of any offer.

c) If during the course of execution of the work any discrepancy or inconsistency, error or omission in any of the provisions of the contract is discovered, the same shall be referred to the owner/ MECON who shall give his decision in the matter and issue instruction directing the manner in which the work is to be carried out. The decision of the OWNER/MECON shall be final and conclusive and the contractor shall carry out the work in accordance therewith.

d) The model numbers of jointing closure offered for this project must have been in successful field use for more than one year.

e) It shall be strictly as per OWNER prerogative and decision of OWNER in the matter being final, not more than 5 % of total quantity ordered may be accepted by OWNER in shorter length than specified 4 KM $\pm$ 2.5% at a discounted price by applying a discount to the ex-works price indicated in price schedule as follows: (Refer MR for the drum size & quantity)

Drum Length 3000 Mtrs to 3899 Mtrs	:	25% discount
Drum Length 2000 Mtrs to 2999 Mtrs	:	50% discount

f) It shall be strictly as per OWNER prerogative and decision of OWNER in the matter being final, not more than 5 % of total quantity (of specified drum) ordered may be accepted by OWNER in shorter length than specified 2 KM $\pm$ 2.5% at a discounted price by applying a discount to the ex-works price indicated in price schedule as follows: (Refer MR for the drum size & quantity)

Drum Length 1000 Mtrs to 1899 Mtrs	:	25% discount
Drum Length less than 1000 Mtrs	:	Not acceptable

5.0 **SUB SYSTEM SPECIFICATIONS**

5.1 **OPTICAL FIBRE CABLE**

GENERAL

The vendor shall be totally responsible for the desired performance of the offered Optical fibre, cable including Design, Engineering, Manufacture and Testing and Supply including transportation to the designated stores, loading & unloading complete in all respect. The cable shall be suitable for storage in open storage yard in any season / weather condition.

The cables should be made with central core tube design.

Multi grade mono-mode cable with 24 fibre counts, out of this 6 fibre counts are as per ITU-T G 655 and 18 fibre counts are as per ITU- T G652 D specifications.

The types of optical fibre cable required are as follows.

CSTA or ECCSA, direct underground burial type Optical Fibre Cable suitable has to be laid by blowing techniques.

Corrugated steel tape armoured or Electrolytically Chrome Plated Low carbon Steel Armoured cable shall be of direct burial type / suitable for blowing and shall be laid at an approximate depth of 1.6 meters from the ground level directly or through HDPE Telecom duct and shall be required to cross various roads, railways, canals, small rivers, marshy areas etc. through appropriate casings, directly/ or inside duct as per site conditions. The cable shall be laid in a permanently lubricated HDPE pipe using blowing techniques.

The intent of the following specifications is to establish the minimum requirements and guidelines for the Optical fibre cable to be supplied for this project.

5.1.1. CABLE CONSTRUCTION SPECIFICATIONS FOR 24 FIBRE

5.1.1.1. General

a) Desired operation life of finished cable **Better than 35 years**
(Suitable for storage in open yard in all weather conditions)

b) Length of CSTA or ECCSA direct underground Burial type O.F. Cable per drum **(Refer MR for size of Drum)** 4 Km ± 2.5 % or 2 Km ± 2.5 %

c)1 Cable weight in single drum **Bidder to provide**

c)1.1 ***(no splicing shall be permitted on any fibre in a drum length of the cable)***

d) Protection required

The cable shall be protected against damages from termite, rodent, fire, chemicals (such as oil & natural gas, LPG and other petroleum products), moisture and water over the lifetime of the cable.

g) Cable identification

i) The outer surface of the cable shall be permanently & legibly marked with colour in contrast to the outer sheath at regular intervals not exceeding one meter with *Name of Owner/Logo of the Owner, Name of manufacturer, structure of cable and 'OPTICAL FIBRE CABLE'*. All the marking over OFC shall be by Hot Foil Indentation and such that it should not be erased during field use.

ii) The outer surface of each completed cable shall have sequentially numbered metric length markers spaced at regular intervals of one meter.

h) Construction details of cable

i) Strength member FRP (minimum 2 mm dia)

ii) Filling of core The tubes shall be filled up with moisture resistant jelly which should be compatible with the coated fibre and the surroundings. The Jelly shall also be flooded over the stranded tubes to ensure blocking of water

transmission. The jelly over the cable core shall be contained by a polyester tape rapped over the cable core. Dry core construction is also accepted subjected to suitability from water penetration.

iii) Number of fibres per tube 6 (Six) fibre per tube. For color of fibre Refer cross section dwg

iii) Colour of tubes — 4 different distinct color.
No of tubes — 4 (Four) tubes ***brown for G 655***
Filler tubes — 02/03 (or as required)
Refer cross section dwg

iv) Moisture barrier — Water swellable yarn /Tape (dry binder threads impregnated with super absorbent- polymer SAP shall be applied helically over the central strength member with a minimum pitch of 25 mm. Further Water blocking tape of 0.15 mm minimum thickness applied longitudinally over the loose tube. The tape shall form a close fit around the cable core with a sealed overlap of 10 % or 6 mm minimum.

v) a) Core covering — Non-metallic strength member comprising of aramid yarn shall be applied helically over the core.

b) Rip Cord — 2 numbers below the MDPE sheath and 2 numbers below Corrugated steel tape.

vi) Inner sheath — **MDPE (with UV Stabilized, Anti Rodent, Anti-Termite additives)**

Thickness of inner sheath — 1.50 mm minimum

vii) Armouring (Direct Underground Burial Type) — CSTA Tape or Electrolytically chrome plated low carbon steel tape both side coated with ethylene acrylic copolymer applied longitudinally with minimum overlap of 10% or 6 mm.

Thickness of steel tape — 0.15 mm minimum

Thickness of each polymer layer — 0.04 mm minimum

viii) Outer sheath — **HDPE (with UV Stabilized, Anti Rodent, Anti-Termite additives)**

Thickness of outer sheath — 1.5 mm minimum

ix) Electrical continuity of the respective metallic layers shall be maintained between the ends of the cable in each cable drum.

X) Overall cable outer diameter shall not exceed 16 mm, bidder to specify

5.1.1.2 Mechanical Characteristics of cable

a) Temperature

Installation & operation (-) 20 Deg. C to (+) 70 Deg. C

Storage (-) 05 Deg. C to 70 Deg. C

b) Tensile strength

For CSTA, Direct underground burial Type OFC — The cable shall have sufficient strength to withstand a load of value T= 9.81W Newton, Where W = weight of 1Km of cable in Kg.

The load shall not produce total strain exceeding 0.25% in the fibre.

c) Cable weight in Kg/Km — Bidder to specify

d) Minimum bending radius — 20*Cable diameter

5.1.1.3 Average splice loss < 0.1db

5.1.1.4 Maximum overall diameter of the cable 16 mm (vendor to confirm)

5.1.1.5 Cross sectional diagram of the cable is attached for reference as **Annexure - 1**. The cable should be confirmed as per this cross sectional drawing. Bidder should submit the proposed / offered cross section diagram of the cable with the bid giving full details. It should confirm to general practice followed internationally. Approval has to be taken before construction of OFC.

TECHNICAL SPECIFICATIONS OF FIBRES TYPE I (* nos fibre – G652D)

Single Mode Optical Fibre, Fully ITU T rec. G652 D Oct 2000, IEC60793-1 & Telecordia GR 20 Core Compliant

Sr. no	Parameter	Requirement	
1.0	**Transmission characteristics**		
1.1	Attenuation coefficient At 1310nm At 1550nm At 1625nm	In bare fibre ≤0.35dB/Km ≤0.20dB/Km ≤0.23dB/Km	In cable ≤0.37dB/Km ≤0.22dB/Km
1.2	Mode field diameter at 1310nm Nominal Tolerance	Any single value 8.6 – 9.5µm ± 0.7µm	
1.3	Cut-off wavelength on 2 mt sample of fibre	≤1320	
1.4	Chromatic dispersion 1285-1330nm 1270-1340 nm Zero dispersion wavelength Zero dispersion slope	 ≤3.5ps/nm-Km ≤5.3ps/nm. Km 1300 –1324nm ≤0.093ps/sqnm. Km	
2.0	**Dimensional Specification**		
2.1	Geometrical parameter • Primary coating diameter • Cladding Diameter • Clad non-circularity • Mode field concentricity error	 245 ± 10µ m 125 ± 1µ m ≤ 1% ≤ 0.8µ m	

3.0	Mechanical Performance	
3.1	Fibre Curl	4m
3.2	Fibre Proof test	1%

MATERIAL PROPERTIES OF THE FIBRE:

a) Protective materials/coatings

Optical fibres shall be coated with UV cured double Acrylate Resin. It should not have any reaction with cladding or core material. The coatings should provide maximum. Resistance to micro bending & abrasion and ensure mechanical & optical strength. The coatings shall be easily stripped with mechanical tools.

b) Fibre Identification

The coatings shall be in various distinct colours in order to facilitate fibre identification. Fibres colours shall correspond to IEC publication 793-2 and 304. The colours shall correspond reasonably with standard colours and shall readily be identifiable and shall be durable. The colours used should have fast colours properties and should not fade during the lifetime of cable. The coating and the colour shall not react with surrounding jelly. The vender shall take prior approval from HPCL for the colour scheme for fibre identification before commencement of manufacture of OFC.

TECHNICAL SPECIFICATIONS OF FIBRES TYPE II

Single Mode Optical Fibre Type-I Fully ITU-T G-655 October'2000, IEC60793-2 and Telecordia GR – 20 Cores Compliant

Sr. no	Parameter	Requirement	
1. Transmission characteristics			
1.1	Attenuation coefficient At 1550nm At 1625nm	In bare fibre ≤0.22dB/Km ≤0.24dB/Km	In cable ≤0.24dB/Km ≤0.26dB/Km
1.2	Mode field diameter Nominal Tolerance	Any Single value between 8-11μ m ± 0.7μm	
1.3	Cut-off wavelength on 2 mt sample of fibre	≤1480	
1.4	Chromatic dispersion 1530-1565nm 1565-1625 nm Zero Dispersion wavelength Zero dispersion slope	 0.1- 6 ps/nm-Km 4 – 11.2 ps/nm. Km ≤ 1530nm ≤0.093ps/sqnm. Km	
1.5	Polarized Mode dispersion IN Cable, maximum individual fibre	≤ 0.15ps/√Km	
1.6	Attenuation with bending 100 turns on a mandrel of 60mm diameter 1 turn on mandrel of 32mm diameter	≤ 0.05dB at 1550nm ≤ 0.5dB at 1550nm ≤ 0.6dB at 1625nm	

3.0	**Dimensional Specification**	
2.1	Geometrical parameter 1. Primary coating diameter 2. Cladding Diameter 3. Clad non-circularity 4. Mode field concentricity error 5. Effective area	 245±10μ m 125 ± 1μ m ≤ 1% ≤ 0.8μ m ≥ 50squm.
4.0	**Mechanical Performance**	
3.1	Fibre Curl	4m
3.2	Fibre Proof test	1%

MATERIAL PROPERTIES OF THE FIBRE:

a) Protective materials/coatings

Optical fibres shall be coated with UV cured double Acrylate Resin. It should not have any reaction with cladding or core material.

The coatings should provide max resistance to micro bending & abrasion and ensure mechanical & optical strength. The coatings shall be easily stripped with mechanical tools.

b) Fibre Identification

The coatings shall be in various distinct colours in order to facilitate fibre identification. Fibres colours shall correspond to IEC publication 793-2 and 304. The colours shall correspond reasonably with standard colours and shall readily be identifiable and shall be durable. The colours used should have fast colours properties and should not fade during the lifetime of cable. The coating and the colour shall not react with surrounding jelly. The vender shall take prior approval for the colour scheme for fibre identification before commencement of manufacture of OFC.

5.1.3 OPTICAL FIBRE CABLE TESTS

The following minimum tests shall be conducted at the factory for the acceptance of the cable (Tests under item No. 5.1.3.1 shall be conducted by the Bidder on his own and test results send to the Owner/MECON for approval/review. Tests under item No. 5.1.3.2 shall be conducted by the Bidder in the presence of Approved Third Party Inspection Agency and Owner/MECON, after receiving test results under item no. 1)(In addition the Bidder shall provide Supplier's test certificate for the various types of raw materials used in manufacturing of this optical fibre cable) during inspection.

LEGEND

AT : All to be tested (100 %)

ST : Sample test (5%) OR Minimum one drum of specified length

5.1.3.1		Tests for fibre:	Testing	Test Reference
	a)	Core (mode field) diameter and concentricity error	AT	ITU-T, G 652 & G.655

	b)	Cut-off wavelength	AT	ITU-T, G 652 & G.655
	c)	Attenuation coefficient		
	c1)	at 1300nm	AT	ITU-T, G 652 & G.655
	c2)	at 1550nm	AT	ITU-T, G 652 & G.655
	C3)	Spectral attenuation G.655	AT	ITU-T
	d)	Chromatic dispersion		
	d1)	at 1300 nm	AT	ITU-T, G 652 & G.655
	d2)	at 1550nm	AT	ITU-T, G 652 & G.655
	d3)	From 1530 to 1565nm G.655	AT	ITU-T G.655
	e)	Cladding		
	ei)	Diameter	AT	ITU-T, G 652 & G.655
	eii)	Non circularity	AT	ITU-T, G 652 & G.655
	f)	Water immersion	ST	IEC– 60793 – 53
5.1.3.2	Tests on completed cables:			
5.1.3.2.1	Visual inspection:			
	a)	Cable lay-up and fibre identification	ST	
	b1)	Identification and length marking on outer jacket.	ST	
	b2)	Colour contrast of the marking with the outer sheath of the cables	ST	
	c)	Overall diameter of the cable	ST	
5.1.3.2.2	Tests for moisture barrier:			
	a)	Thickness of layers	ST	
	b)	Extent of overlapping	ST	
	c)	Water immersion	ST	
5.1.3.2.3	Tests for corrugated steel tape armouring:			
	a)	Thickness of layers	ST	
	b)	Extent of overlapping	ST	

c) Electrical continuity of metallic layers AT

b) Electrical discontinuity between CSTA and moisture barrier AT

5.1.3.2.4 Other tests:

a) Attenuation at 1310 nm & 1550nm AT ITU-T, G. 652 & G.655
Polarization Mode dispersion ST ITU-T

b) Tensile performance ST IEC-794-1-E1

b1) CST-ECCSA, direct underground burial type O.F. Cable
(with a tensile load of value T= 9.81 W Newton, where W = weight of 1 km `Cable' in kg).

c) Crush ST IEC-794-1-E3
(with 200 kg of load to be slowly placed and held for 60 seconds. The change in attenuation should not exceed 0.1dB/km)

d) Impact ST IEC-794-1-E4
(with a mass of 5 kg allowed to fall freely from 500 mm height on the cable sample 10 times repeatedly with a gap between one impact to another approximately at 60 seconds. The change in attenuation should not exceed 0.05dB/km)

e) Torsion ST IEC-794-1-E7
(with a weight of 7.5 kg attached to the stationery chuck and shall be subjected to 10 cycles. The change in attenuation should not exceed 0.05dB/km)

f) Bend ST IEC-794-1-E11
(To be performed preferably with Procedure 1 (of IEC) with a mandrel diameter of 24D mm, where D is the diameter of the cable and testing shall be done with 4 turns of cable wrapped and then unwrapped for 10 complete cycles. The change in attenuation should not exceed 0.05dB/km at 1310nm & 1550nm.

g) i) Load test : a load of 100 N. No damage to the fibre, sheath or to the other cable elements.
ii) Kink ST IEC-794-1-E10
Radius: 10*Cable diameter. No kink shall occur.

h) Temperature cycling ST IEC-794-1-F1
(Temperature cycle shall be taken as☺
i) at room temperature : 1 hr.
ii) at zero degrees : 12 hrs.
iii) at 65 degrees : 12hrs
iv) from 65 degrees to room temperature : 1 hr
(The change in attenuation should not exceed 0.1dB/km)

i) Water penetration test ST IEC-794-1-F5
Water head: 1 M. Test period 24 hrs No leakage from test length cable

j) Sheath integrity (Spark test) ST IEC-794-1-F3
The sheath shall withstand a spar test voltage of at least 8KVr.m.s. or 12 KV d.c.

k) ESCR at 50 deg C for 48 hrs ST IEC-794-1
(Sample of outer sheath - No crack observe)

NOTES :

In case optical fibre cables, tested and inspected in accordance with this specification, fail to pass the test or non comply with the specification requirement, the tests shall be repeated on a further representative set of cable pieces, and if it again fails, the whole lot shall be rejected subject to the discretion of the Owner/MECON.

All RAW material test reports and test reports of fibre shall be made available at the time of inspection for review.

Bidder shall provide detailed test procedures for each of the above-mentioned tests DURING DETAILED ENGINEERING.

All the necessary test instruments shall be made available with valid calibration from the certified statutory laboratory / NABL accredited lab only. All the internal test certificate and material test reports shall be forwarded along with inspection call.

5.2 **JOINTING CLOSURES (applicable if part of supply as per MR)**

Jointing closures shall be suitable for the cables, as mentioned under clause 5.1. Jointing closures should be Dust tight (No dust ingress) and Protected against immersion in water (Suitable for continuous immersion in saline water) and should be complete with all accessories including splice cassettes splice protection and all other accessories including accessories for electrical continuity of metallic layers of optical fibre cable. The jointing closures shall be provided with suitable jointing pit support hardware to secure the jointing closures to a ~1200 mm dia. circular jointing pit.

Jointing Closure Tests

The following tests shall be conducted as a minimum:

a) Water Ingress Test

The cable-jointing box shall be assembled along with a continuous piece of cable passing through. The jointing box shall then be secured at the bottom of a immersion tank containing water upto a height of 2.0 m at normal room temperature for a period of 24 hours. The joint box will then be opened as per the specified procedure and visually examined for any ingress of water. It shall be declared to have passed the test in case there is no water present inside the box.

b) Impact test

The cable joint box shall be kept on a metal platform. A weight of 5 kgs spherical type having radius of R 50mm at striking end will be made to strike the box at the middle after having been released from a height of 500mm for 10 times. The joint box will be declared to have passed the test in case there are no cracks or fracture inside or outside of the box.

c) Drop and topple test

A drop test platform consisting of a steel plate not less than 6.5mm thick has to be used. The steel plate is bolted to a fully set concrete block at least 460mm thick. The joint box shall then be allowed to topple and fall freely from a height of 2000mm. The joint box will be declared to have passed the test in case there is no visible damage to the enclosure.

d) Pulling test

The joint box should be assembled with a long length of cable so that it can be pulled to the required tension of 200 kgs to check the strength of fixing arrangement inside the joint box.

e) Static load test

The assembled cable joint closure shall be kept on a platform with dimension more than that of cable joint closure. A curved hollow profiled mandrel shall be used for application of load and the mandrel shall be at the middle straight part of the joint closure. Weights shall be gradually placed on the mandrel till the weight becomes 200 kgs. The joint box shall be kept under the weight for a period of 24 hours. The joint closure shall be declared to have passed the test in case there is no visible damage.

Bidder shall provide detailed test procedures for testing Jointing Closures, and may improve upon the same.

6.0 GENERAL SPECIFICATIONS

6.1 VENDOR DATA REQUIREMENT AND DOCUMENTATION

a) One set of Hard copy till the approval of Document and after approval two sets of hard copy and 6 sets of soft copy in CDs.

b) All documents shall be in English language only.

c) During system definition /engineering stage, owner/MECON shall review/approve drawings/documents to be mutually agreed with the vendor.

6.1.1 With the initial bid, the following documents shall be submitted:

1) Clause wise compliance of Technical specification and acceptance all terms & condition.
2) Cable construction-showing cross section of the offered Optical fibre cable, providing details of each layer (Specifically mentioning, material used thickness etc.).
3) Cable lifetime calculations.
4) Jointing Closure details. (If applicable)

6.1.2 The following documents for the complete system shall be supplied to Owner/MECON in order to start Factory Acceptance Testing:

a) Following documents shall be supplied for review and approval.

1) Detailed testing procedure for Optical fibre cable, Internal testing reports, RAW materials and testing reports.

2) Detailed testing procedure for Joint closures & Test Instruments.(if applicable)

3) Quality Assurance program (OFC, JC & test instruments etc separately)

4) Any other data, document not specifically mentioned, but required for satisfactory completion, operation and maintenance of the system shall be provided.

b) Following documents shall be supplied for information only.

1) Detail Technical manual of Joint closures and each type of instruments/equipment containing circuit diagrams and description.

2) Maintenance manual of each type of instrument/equipment.

6.2 PACKING

All equipments/instruments/cable drums shall be individually packed in suitable containers/crates designed to avoid damage to the equipments during transit and storage in accordance with best commercial practice and with the requirements of applicable specifications. The materials used for packaging, wrapping. Sealing, moisture resistant barriers, corrosion preventers, etc. shall be of recognized brands and shall conform to best standards in the areas in which the articles are packaged. *The packing shall protect the equipment from impact, vibration, rough handling, rain, dust, damp, insects, rodents, etc. Each container/crate shall be subjected to impact, vibration and other mechanical tests and all drum shall be suitable for storage in any type of weather condition in open field.*

Each container shall have a copy of factory acceptance test report enclosed in it.

Packages for optical fibre cable shall make provision to allow for two (2) meters of excess cable on the inner end of the package to be accessed from outside. The outer end of the cable shall have pulling eye with heat shrinkable sleeves attached to it. The inner end of the cable shall be provided with a heat shrinkable sleeve. The ends shall be adequately protected to allow for normal handling during shipment.

6.3 QUALITY ASSURANCE PROGRAMME & TESTING

QUALITY ASSURANCE PROGRAMME

a) Vendor shall submit the details of Quality Assurance Programme followed by him beginning with raw materials, fabricated components, assemblies, etc. to finished product (AS APPLICABLE). Vendor shall obtain and forward the Quality Assurance Programme for equipment supplied by Sub-contractor, if any.

b) The owner, MECON and/or third appointed agency reserves the right to inspect and test cable, jointing closures, etc at all stages of production and testing. The inspection and testing shall include but not be limited to materials, sub-assemblies, prototypes, produced units, guaranteed performance specifications, etc.

c) For Factory inspection and testing, Vendor shall arrange all that is required e.g., quality assurance personnel, space, test gear etc. for successful carrying out of the job by the Owner's representatives at Vendor's cost at the Vendor's/Manufacturer's works.

d) Owner's representatives shall have free entry and access to any and all parts of the Vendor's facilities associated with manufacturing and testing of the system at any given time.

e) *It shall be explicitly understood that under no circumstances shall any approval of the Owner or his representatives relieve the Vendor of his responsibility for material, design, quality assurance and the guaranteed performance of the system and its constituents.*

f) Vendor shall invite the Owner/MECON, at least 15 days in advance, of the date on which system shall be ready for Inspection and Testing. All relevant documents and manuals; approved engineering drawings, etc. shall be provided to the Owner's representatives well in advance of the start of Inspection and Testing. In case of third part inspection shall be arrange along with inspection of client/MECON.

f) Owner/MECON shall, after completion of inspection and testing to their satisfaction, issue factory acceptance certificates to release the cable/jointing closures for shipment. No cable/jointing closures shall be shipped under any circumstances unless a factory acceptance certificate has been issued for it, unless agreed otherwise by Owner/MECON.

6.3.1 TESTING

a1) Optical Fibre Cable

Factory testing shall be conducted for acceptance of the cable at the manufacturing facility, wherefrom cable is offered for this project before final acceptance, as per the approved test plan.

a2) Jointing closures

Jointing closures shall be tested before final acceptance, as per the approved test plan.

a3) Test Instruments

All test instruments shall be provided with calibration certificates. Test instruments shall be tested for functional operations, as per the approved test plan.

b) Vendor shall arrange all test equipments/instruments, manpower, test-gear, accessories, etc., necessary for testing.

c) All technical personnel assigned by Vendor shall be fully conversant with the system specifications and requirements. They shall have the specific capability to make the system operative quickly and efficiently and shall not interfere or be interfered by other concurrent construction and commissioning activities in progress. They shall also have the capability to incorporate any minor modifications/suggestions put forward by MECON/Owner.

d) Power supply required for testing shall be arranged by the Vendor.

e) Test Plan

Vendor shall submit to Owner and MECON `Test Plans' well in advance of commencement of actual testing.

The plans shall include:

ei) Functional and performance description (in short) and Tests to be conducted and purpose of test.

eii) Test procedures (including time schedule for the tests) and identification of test inputs details and desired test results.

f) Test Report

The observations and test results obtained during various tests conducted shall be compiled and documented to produce Test Reports by Vendor. The Test Reports shall be given for each equipment/item and system as a whole. The report shall contain the following information to a minimum:

fi) Test results.

fii) Comparison of test results with anticipated test result as given in test plans and reasons for deviations if any.

fiii) The data furnished shall prove convincingly that:

I) The system meets the Guaranteed performance objectives.
II) Mechanical/Optical/Electrical limits were not exceeded.
III) Failure profile during the tests are well within the specified limits.

ANNEXURE

Annexure '1' : Cable Construction for 24 count CSTA Optical Fibre Cable
Annexure '2' : List of Special Tools & Tackles for OFC.
Annexure "3" : DATA TO BE FURNISHED BY THE BIDDER

Annexure '1'

Suggestive Schematic Constructional Diagram For 24 Fibre OFC (Ref cl 5.1.1 above) (Bidder has to provide details as per spec requirement)

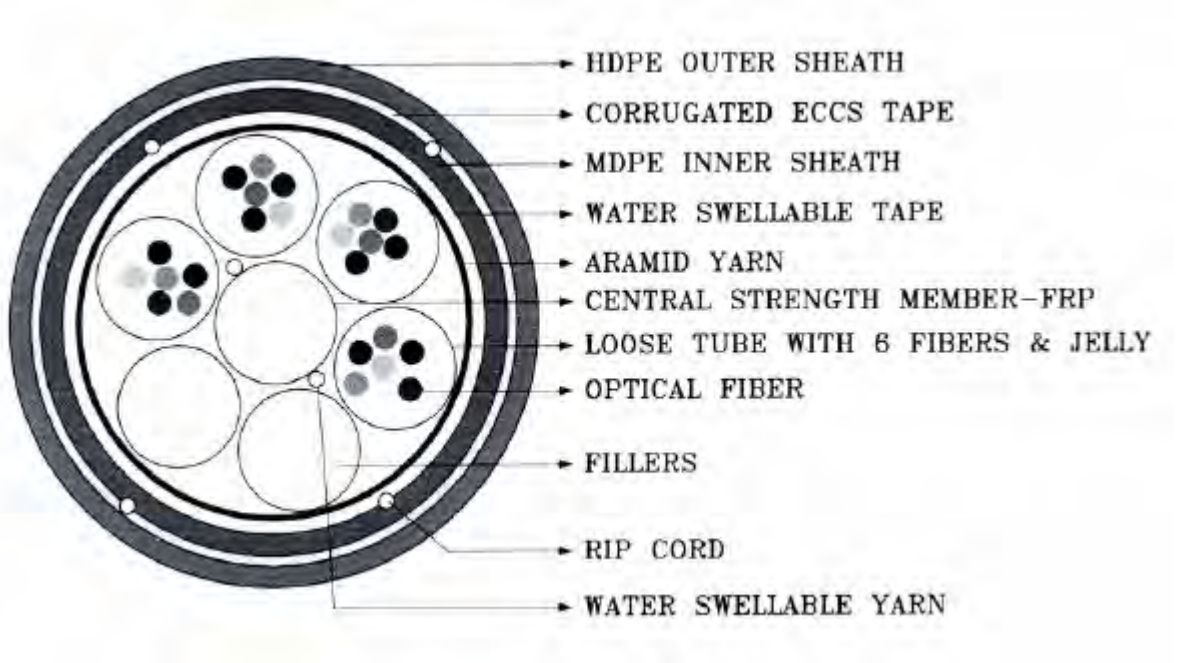

Fibre colors	: BI, Or, Gr,, Br, SL, Nat
Loose Tube colours	: BI, Or, Gr, Br
Filler colors	: Black/Natural
Outer Diameter	: 16 mm Maximum

Annexure '2'

List of Special Tools and Tackles for OFC:

The bidder shall fill quoted for the list provided against each item in the un-priced offer of the bid (Bidder is required to quote for all items in this bid document) (supply if applicable; refer MR)

Special Tools and Tackles

Optical Fibre Cable preparation tool kit (Each set consisting of followings)

1.	Three Wheel cutter (HDPE/ MDPE/ CSTA/ ECCS etc. accurately	1 No.
2.	Sheath Cutter (for cutting sheath)	1 No.
3.	Adjustible torgue wrench with adopter	1 No.
4.	Adjustible Knife	1 No.
5.	Hack-Saw (small)	1 No.
6.	Armour punch	1 No.
7.	Measuring tape - SS (3 meters)	1 No.
8.	L-N key	1 No.
9.	Cable Cutter	1 No.
10.	Crosshead screw driver	1 No.
11.	Flat head screw driver	1 No.
12.	Combination Plier	1 No.
13.	Scissors	1 No.
14.	Flat spanners	1 No.
15.	Loose tube cutter	1 No.
16.	Stripper	1 No.
17.	V-Groove	1 No.
18.	Installation kit for splice closures	1 No.
19.	Fibre Cleaver (Diamond cutter)	1 No.
20.	5 Meter pigtails with FC/ PC Connector at one end	1 No.
21.	10 meter patch cord with FC/PC Connector at both end	1 No.

2 sets of documentation for Technical literature for Tools and Tackles and user manuals shall be provided.

Annexure -3

DATA TO BE FURNISHED BY THE BIDDER:

(Bidder shall furnished this information at the time of their offer otherwise their offer may be rejected / disqualified for OFC work)

Sl. No.	Description	Specification	To be filled by bidder
1	Name & address of the Bidder for OFC.		
1.1	Whether Bidder is OFC Manufacturer	OFC	Yes/ No
1.2	Supply Record		
1.2 a	Manufacturing facilities from which OFC were supplied for earlier projects within last three years from the bid date.	- Jelly Filled, 1300nm/ 1550nm, single mode CSTA/ ECCS, slotted core / loose tube OFC, as per ITU G-652 - OFC as per ITU G-655	
1.2 b	Whether the manufacturing facilities for the cables in 1.2 a above is Bidder's own facility.		Yes/ No
1.2 c	Detail of order in respect of having supplied minimum * KMs of OFC in last three years including at least ** KMs of steel Tap armoured OFC. * / ** Refer BEC – Technical	* KMs (minimum) ** KMs (minimum)	
1.2 d	Detail of manufacturing facilities of OFC for the project including locations / capacity etc.		
1.2 e	Optical fiber cable offered & available range		
1.2 f	Enlist the documentary evidence of Bidder's capability to manufacturing and supply of above a) P.O.Copies Order completion certificate	To be enclosed	
1.2 g	Name of the manufacturer of Optical fibre		
1.3	OFC rejected / found defective after supply		
2.0	**Jointing Closure**	If applicable	
2.1	Name and Address of the Bidder / supplier		
2.2	Place of manufacturing		
2.3	Users certificate confirming satisfactory performance for at least six months as on bid due date.		
2.4	Special tool and Tackles as per the list given in the Bill of quantity		

The Bidder shall be entirely and exclusively responsible for all works under this bid document. Bidder to fill blank spaces (marked (b)), of this form. Legend : NA – Not applicable.

Sl. No	Description	Performed by (Provide name)	Place of execution of the activity
1.1	Single source responsibility with Performance guarantee for successful completion of scope of work for this project.		
1.2	Design & Engineering		
1.3	Optical fiber cable & accessories		
1.4	Documentation		

Bidder shall specifically indicate the deviation related to technical work if any and give proper justification with documentary evidence for specific deviation.

****

III. TECHNICAL SPECIFICATION FOR TEMPORARY CATHODIC PROTECTION WORKS

Technical Specification

for

Temporary Cathodic Protection Works

Rev. : 3
Edition : 1

SPECIFICATION
FOR
TEMPORARY CATHODIC PROTECTION SYSTEM

SPECIFICATION NO.:- MEC/TS/05/E9/016A

(OIL & GAS SBU)
MECON LIMITED
DELHI 110 092

CONTENTS

SL. NO.	DESCRIPTION
1.0	SCOPE
2.0	CODES AND STANDARDS
3.0	CORROSION DATA
4.0	CATHODIC PROTECTION DESIGN PARAMETERS
5.0	CATHODIC PROTECTION DESIGN CRITERIA
6.0	SYSTEM DETAILS
7.0	INSTALLATION
8.0	CIVIL WORKS
9.0	TESTING AND INSPECTION AT WORKS
10.0	PACKING AND TRANSPORT
11.0	SYSTEM TESTING COMMISSIONING AND INTERFERENCE MITIGATION
12.0	SYSTEM MONITORING
13.0	DRAWINGS AND DOCUMENTS
14.0	INSTRUMENTS, TOOLS AND SPARES
15.0	INFORMATION REQUIRED WITH BID

AMENDMENT STATUS

Sl. No.	Clause / Paragraph / Annexure / Exhibit / Drawing Amended	Page No.	Revision	Date	By (Name)	Verified (Name)
1	Cl. No. 4.1 & 4.3 (Protection current density & Anode utilization factor)	-	1	05.06.11	AM	SS
2	4.1 (ii)-Current Density	-	-	Sept-12	AM	DGM
3	Revised & Issued as standard specification	-	2	Oct-15	AM	MKJ
4	Revised & Issued as Standard Specification	-	3	Aug-2019	AM	MKJ

1.0 SCOPE

1.1 This specification defines the requirements of design, engineering supply of materials, installation, testing and commissioning of temporary cathodic protection system of external surface of cross country underground pipeline/structure including supplementing of corrosion survey, investigation for interference/ interaction problems and mitigation of the same. Unless otherwise specified monitoring of the temporary cathodic protection system till the commissioning of permanent C.P. System shall be carried out by temporary C.P. contractor.

This specification defines the basic guidelines to develop a suitable temporary cathodic protection system for the structure required to be protected. All data required in this regard shall be taken into consideration to develop an acceptable design and for proper engineering of the system.

1.2 Compliance with these specifications and/ or approval of any of the contractor's documents shall in no case relieve the contractor of contractual obligations.

1.3 In case where temporary and permanent cathodic protection works are being executed by the same agency, activities of permanent CP system which are common to temporary CP system shall be completed as part of temporary CP system. In cases where temporary and permanent cathodic protection works are being executed by different agencies, the contractual scope of work shall be referred for further details.

1.4 All work to be performed and supplies to be effected as a part of contract shall require specific approval of owner or his authorised representative. Major activities requiring approval shall include but not be limited to the following :-

- Corrosion survey data interpretation report and design basis for CP system.
- CP system design package
- Purchase requisitions for major equipment and vendor approval
- Detailed engineering package
- Field testing and commissioning procedure
- Procedures for interference testing and mitigation
- CPL survey and system monitoring procedures

2.0 CODES AND STANDARDS

2.1 The system design, performance and materials to be supplied shall unless otherwise specified, conform to the requirements of latest relevant applicable standards of :-

i)	NACE Standard SP-0169	:	Standard Practice Control of External Corrosion on Underground or Submerged Metallic Piping Systems.
ii)	NACE Publication 10A190	:	Measurement technique related to criteria for CP of Underground or Submerged Steel Piping System (as defined in NACE Standard RPO169-83)
ii)	NACE Standard SP-0177	:	Standard Practice Mitigation of Alternating Current and Lightning Effects on Metallic

			Structures and Corrosion Control System.
iv)	NACE Standard SP-0286	:	Standard Practice the electrical isolation of Cathodically Protected Pipelines.
v)	NACE Publication No. 54276	:	Cathodic Protection Monitoring for Buried Pipelines
vi)	NACE Standard SP-0572	:	Standard Practice for Design, Installation & Operation of Impressed Current Deep Ground beds
vii)	NACE Standard SP-200	:	Standard Practise for Steel Cased Pipeline Crossings
viii)	NACE Standard SP-0104	:	The Use of Coupons for Cathodic Protection Monitoring Applications
ix)	BS 7361 Part I	:	Code of Practice for Cathodic Protection for land and Marine applications
x)	VDE 0150	:	Protection against Corrosion due to Stray Current from DC Installations.
xi)	IS : 7098 Part I	:	XLPE insulated cables.
xii)	IS: 8062	:	Code of practice for cathodic protection of steel structures
xiii)	NACE TM 0497	:	Measurement Techniques Related to Criteria for Cathodic Protection on Underground or Submerged Metallic Piping Systems

- Pbody book on control of pipeline corrosion

In case of conflicting requirements amongst any of the above standards the publication having most stringent requirement shall be governing.

2.2 The equipment shall also confirm to the provisions of Indian Electricity rules and other statutory regulations currently in force in the country.

2.3 In case of any contradiction between various referred standards / specifications / data sheet and statutory regulations the following order of priority shall govern:

- Statutory Regulations
- Schedule of rates & Scope of work/PJS
- Data Sheets
- Design Basis
- Job Specification/Scope of work
- This Specification
- Codes and Standards.

3.0 CORROSION DATA

3.1 The corrosion survey including soil resistivity data along ROW and other data required for CP design is attached with this document. However, verification of its veracity and adequacy shall be the entire responsibility of the contractor. In addition, contractor shall have to generate/ collect additional data as required for completeness of the job. Contractor shall also carry out soil resistivity survey at temporary anode ground bed locations for proper design of ground beds. Wenner's 4-pin method or approved equal shall be used for such measurements. Survey instruments shall have maximum AC and DC ground current rejection feature.

Care shall be taken to ensure that the resistivity observations are not influenced by the presence of foreign pipelines / structures, and earth currents in the vicinity of EHV / HV lines and installations using earth return in their power system etc.

3.2 Additional data to be collected

The following data shall be collected to generate design data for evaluation of interaction/ interference possibilities due to presence of other services in ROW/ in vicinity.

i. Route and types of foreign service/pipeline in and around or crossing the right of way (including those existing and those which are likely to come up during contract execution or any abandoned pipelines).

ii. Details of Existing Pipelne including diameter, wall thickness, pressure, pipeline coating against corrosion, soil cover used in case of pipelines.

iii. Detail of the existing cathodic protection system protecting the services i.e. location, rating, type of protection, anode beds, test station locations and their connection schemes.

iv. Graphical representation of existing structure/ pipe-to soil potential records. CP unit current/ voltage readings.

v. Remedial measures existing on foreign pipeline/services to prevent interaction.

vi. Possibility of integration/isolation of CP system, which may involve negotiations with owners of other services.

vii. River crossing with detail of location/chainage, Name of river, Length of river.

viii. Crossing and parallel running of electrified and non-electrified traction (along with information regarding operating voltage, type AC/DC etc.) as well as abandoned tracks near ROW having electrical continuity with the tracks in use.

ix. Crossing and parallel running of any HT/AC/DC overhead line (existing/proposed) along with details of voltage, type AC/DC etc.

x. Voltage rating, number of cores and sheathing details of under ground power cables, running in parallel or crossing ROW.

xi. Information on existing and proposed DC/AC power sources and system having earth as return path, in the vicinity of the entire pipeline, route such as HV/DC sub stations, fabrication yards with electric welding etc.

xii. Any masonry work for other concrete or non conductive constructions in the ROW which may block the CP current or cause interference to the pipeline.

xiii. Any other relevant information that may be needed in designing and implementing proper protection scheme for the proposed pipeline.
Unless otherwise mentioned, Contractor shall conduct necessary potential gradient survey for any existing anode ground bed that may interfere with the CP system of the pipeline covered under this project.

3.3 Report

On completion of all field work a report incorporating all the results generated from surveys and details of additional data collected shall be furnished. The report shall also contain detailed interpretation of survey results and resistivity data enclosed, probable interference prone areas etc. to form design basis for the scheme of cathodic protection. This report shall be plotted on semi-log graph sheets.

4.0 CATHODIC PROTECTION DESIGN PARAMETERS

Unless otherwise specified in the project specifications, following parameters shall be used for design of temporary cathodic protection system.

Those parts of sacrificial anode cathodic protection system which will be integrated with permanent CP system shall be designed based on permanent CP parameters.

4.1 Protection current density

(i) Pipe lines having FBE Coatings

Pipeline surrounding Resistivity	Minimum Protection current density*
	Temporary CP ($\mu A/m^2$)
Normal Soil (10-100 Ohm-Mtr)	60
Marshy Area/ HDD (<10 Ohm-Mtr)	90
High Resistivity Area (more than 100 ohm-mtr. Resistivity)	40

(ii) Pipe lines having polyethylene coatings

Pipeline surrounding Resistivity	Minimum Protection current density*
	Temporary CP ($\mu A/m^2$)
Normal Soil (10-100 Ohm-Mtr)	40
Marshy Area/ HDD (<10 Ohm-Mtr)	75
High Resistivity Area (more than 100 ohm-mtr. Resistivity)	25

* Actual current density to be adopted shall be decided based upon soil and other environmental conditions, proximity of foreign pipelines and structures affecting interference. Where considered necessary for satisfactory protection of pipeline the current density shall be suitably increased by contractor.

4.2 Safety factor for current density : 1.3

4.3 Anode utilization factor : 0.88 for Centre Connected Mg Anodes
0.6 for End Connected Mg Anodes &

0.85 for Centre Connected Zn Anodes
0.5 for End Connected Zn Anodes
0.6 for Ribbon anodes

4.4 Pipeline natural potential : (-) 0.45 V

4.5 Unless otherwise specified in project specification the design life of temporary CP shall be as mentioned in Scope of work and that of permanent CP shall be 35 years.

5.0 CATHODIC PROTECTION DESIGN CRITERIA

5.1 Cathodic protection system shall be designed to meet the following criteria:

a) The pipe to soil potential measurements shall be more negative than (-) 850 mV (Off) polarized potentials with respect to a saturated copper/ copper sulphate reference electrode.

b) In rare circumstances a minimum polarisation shift of (-) 100 millivolts of cathodic polarization between the structure surface & a stable reference electrode shall indicate adequate levels of cathodic protection for the pipeline. The formation or decay of this polarisation can be measured to satisfy this criterion.

Discretion to use any of the criteria listed above shall solely rest with the owner/ owner's representative.

a) A positive potential swing of 50 mill volts and above shall be considered as sufficient to indicate the presence of an interaction situation (i.e. Interference on the pipeline) requiring investigation and incorporation of mitigation measures by the CONTRACTOR.

6.0 SYSTEM DETAILS

The system shall include the following major equipment/sub-systems unless otherwise specified:

- Sacrificial anodes and anode ground beds
- Test stations
- Surge diverter/grounding cell
- Polarisation cells
- Interconnecting cables
- Cable to pipe connections
- CP System at cased crossings
- Electrical resistance probes & Reader
- Polarisation Coupons

All equipment shall be new and supplied by approved reputed manufacturers. Equipment offered shall be field proven. Equipment requiring specialized maintenance or operation shall be avoided as far as possible and prototype equipment shall not be accepted. Make and construction of all material shall be subject to owner's approval.

The detailed specification of each system and equipment shall be furnished by the contractor. However, certain minimum requirements for the major equipment are highlighted in this document.

As far as possible equipment including test stations, anode lead junction boxes, etc., shall be located in safe area. All equipment located in hazardous areas shall be of flame proof type as per IS: 2148 or equivalent international standard for gas groups IIA & IIB and temp. Class T3. Indigenous equipment shall be certified by CMRI or any other recognized testing body and shall be approved by the concerned statutory authority. All flameproof equipment shall carry the BIS license marking as per the requirement of statutory authorities.

All imported equipment for hazardous area may be tested and certified by an independent certifying agency of country of equipment origin and shall be approved by the concerned statutory authority in India.

6.1 Anode Ground Beds

6.1.1 The pipeline shall be protected by pre-packed zinc/ magnesium anodes.

6.1.2 Along ROW where soil resistivity predominantly remains low, ranges from 0-10 ohm. m and pH value is within 9, zinc anodes may be provided. Anodes of type I as per ASTM-B 418 standard shall be used for seawater, brackish water or saline electrolyte application and anode of type II as per ASTM-B 418 standard shall be used for fresh water, back fill and soil applications.

6.1.3 Along ROW where soil resistivity predominantly in the range of 10 ohm. m to 30 ohm. m low potential (1.55V) magnesium anodes may be provided.

6.1.4 At saline soil Ag/Agcl reference electrode should be used and not Zinc electrode.

6.1.5 Along ROW where soil resistivity is predominantly in the range of 30 ohm.m to 50 ohm.m high potential (1.75V) magnesium anodes may be provided.

6.1.6 At high resistivity area where resistivity is of the order of 50 ohm-m and above magnesium ribbon anodes may be provided.

6.1.7 Where magnesium anodes are used for protection of polyethylene coated pipelines, the anodes shall be preferably of low potential (1.55 V) type.

6.1.8 Anodes shall be installed along the pipeline at suitable intervals as per pipeline protection voltage attenuation calculations and ground bed resistance/ current output of anode installations. Minimum one anode installation shall be provided for every 1 (one) km of the pipeline. At high resistivity area the magnesium ribbon anodes shall be installed all along the pipeline by the side of the pipeline in the pipeline trench or in separate trench.

6.1.9 Each electrically continuous section of pipeline shall preferably be protected totally by one type (material) of anodes to avoid inter-anode circulation currents.

6.1.10 The anodes shall be installed at sufficient depth to reach moist soil and shall be separated from the pipe line by at least 5m and 2m for magnesium and zinc anodes respectively. The magnesium ribbon abode shall be separated from the pipeline by at least ½ meter. The anode connections to pipeline shall be routed through test stations.

6.1.11 For sacrificial anode ground bed which shall be integrated with permanent CP System the leads of all the anodes shall be brought up to the test station and shall be terminated individually.

6.1.12 The number of anodes at each ground bed shall be sufficient for providing the specified pipe protection current density taking into consideration the ground bed resistance, pipe coating resistance, cable resistance, etc. Contractor shall prepare a table for number of anodes required at different soil resistivities to produce the specified protection current. Any deficiency in the protection system if noticed during commissioning or during monitoring shall be corrected by the CP contractor by suitably augmenting the system with additional anodes without any cost / schedule implications.

6.1.13 For the portion of the pipeline for which for CP system has been specified based on the permanent CP system parameters, the contractor shall ascertain the requirement of the cathodic protection current density indicated in Cl. No. 4.1 above. Where specified in the project specification / datasheet the requisite current density test /survey shall be conducted by the contractor to establish the adequacy of the CP current requirement & number of anode ground beds.

6.2.1 Magnesium anode

The anode shall confirm to the requirements of ASTM-B 843 standard. The anode shall be of high manganese, magnesium alloy packed with special back fill. The metallurgical composition, potential and consumption rate of anode shall be as below:

(i) Composition:

Element	Weight (Low Potential type)	Weight (High Potential type)
Manganese	0.15%	0.5 – 1.3%
Copper	0.02% max.	0.02% max.
Silicon	0.1% max.	0.05% max.
Zinc	2.5% - 3.5%	
Aluminium	5.3% - 6.7%	0.01% max.
Iron	0.003% max.	0.03% max.
Nickel	0.002% max.	0.001% max.
Other metallic elements		
- Each	-	0.05% max.
- Total	0.3% max.	0.3% Max.
Magnesium	Balance	Balance

(ii)	Anode closed circuit potential	1.55 volts	1.75 volts
(iii)	Anode consumption rate	7.9 kg/(A yr)Max.	7.9 kg/(A yr) Max.

6.2 Zinc Anode

The anode shall confirm to the requirements of ASTM-B 418 standard. The anode (other than ribbon anode) shall be packaged with special back fill. The metallurgical composition of anode, potential and consumption rate shall be as below. Anodes of Type-I shall be used for seawater, brackish water or saline electrolyte application and anodes of Type-II shall be used for fresh water, back fill and soil applications.

(i) Composition:

Element	Weight Type-I	Weight Type-II
Aluminum	0.1% to 0.5%	0.005% max.
Cadmium	0.025 – 0.07%	0.003% max.
Copper	0.005% max.	0.002% max.
Iron	0.005% max.	0.0014% max.
Lead	0.006% max.	0.003% max.
Others	0.01% max.	-
Zinc	Remainder	Remainder

(ii)	Anode closed circuit potential	1.1 volts	1.1 volts
(iii)	Anode consumption Rate	11.24 kg/(A yr) max.	11.24 kg/(A yr) max.

6.2.1 Contractor shall furnish spectrographic analysis from each heat both for zinc and magnesium anodes along with electrochemical test results.

6.2.2 The anodes for grounding of cathodically protected above ground pipelines at intermediate SV station, pigging stations, etc., grounding of motor operated valves on cathodically protected portion of the pipeline, grounding of pipeline through polarization cell at EHV / HV line crossings or running in parallel, etc. shall be of minimum 20 kg net weight each. The anode and cable terminations shall be suitable for the anticipated fault current at the location of installation. For pipelines protected by sacrificial anodes, for directly grounding the pipeline shall be of the same type as the one provided for the protection of the pipeline.

6.3 Special Backfill

The composition of special back fill for anodes shall be as below. In any case, the thickness of back fill shall not be less than 50 mm on all sides of the anode.

Hydrated Gypsum	75%
Bentonite Clay	20%
Sodium Sulphate	5%

6.3.1 The anodes shall be provided with cable tail of sufficient length to reach junction box test station as applicable without tension.

6.3.2 Tolerance in fabrication of anodes

The anode surface shall be free from cracks which may reduce the performance of the anode.

Any cracks which follow the longitudinal direction of elongated anodes shall not be acceptable.

Small cracks in the transverse direction of elongated anodes and in anodes of other shapes may be accepted provided the cracks would not cause any mechanical failure during service of the anode considering that the combination of cracks and lack of bond to the anode core is detrimental.

For transverse cracks the acceptable limits shall be furnished by the bidders along with the offer.

The anode shall be free from excessive shrinkages. The following limits shall be used:

- Maximum 10% of the depth of anode or 50% of the depth of the anode core whichever is less. The depression may be measured from the edged of one side.

The surface of the anodes shall be free from coatings and slag/dross inclusions etc.

The maximum deviation from straightness shall not exceed 2%.

The weight tolerance on individual anodes may be taken as ± 5%. The total weight of the anodes shall not have negative tolerance.

Recommended dimensional tolerance shall be as follows:

Length	± 2.5%

Width/thickness ± 5%

6.4 Test Stations

6.4.1 Test stations shall be provided along the pipeline ROW for monitoring the performance of the Cathodic Protection system at intervals not exceeding 1000 meters area unless otherwise specified. In addition to above, test stations shall also be provided at the following locations:

a. At the locations of anode ground beds
b. At all insulating joints
c. At vulnerable locations with drastic changes in soil resistivity
d. At connections of surge diverters, grounding cells and polarisation cells
e. At HV AC/DC overhead line crossings and selected locations where HT overhead line is in the vicinity of the pipeline & running parallel.
f. At location of cable crossing.
g. At tap-off stations, at receipt station.
h. At both sides of major river crossings.
i. At high voltage cable crossings or along routes where HV cables are running in parallel.
j. In the vicinity of DC net works or grounding system where interference problems are suspected.
k. At crossings/parallel running of other pipeline / structures
l. At the locations of reference cell and Electrical Resistance probe installation.
m. At both sides of cased crossings, at both sides of railway line crossings.
n. At any other locations considered vulnerable locations where interference is expected
o. At location of CTSU.
p. At the locations of reference cell, Polarisation coupons Installation and ER probe installation.
q. At locations of Sectionalising Valve (SV) stations & IP (Intermediate Pigging Stations).
r. At any other locations considered necessary by owner/owner's representative

6.4.2 Bond stations shall be provided with high quality shunt & resistor at required locations as a means to monitor and control current flow between the pipeline and foreign pipelines / structures / electrified railway tracks etc. that crossing and running parallel to the pipeline in common ROW or within 25 metre from the pipeline.

6.4.3 Test stations used for sacrificial anodes shall have high quality shunt for measurement of anode current, and provision for resistance insertion to limit the anode current output & anode disconnecting link.

6.4.4 Sealing of Test stations shall be carried out by solid foam sealant or other solid sealing compound as approved by the engineer-in-charge.

6.4.5 Test station with current measuring facility shall be provided at each intermediate CP station drainage point (to measure pipeline from drainage point), at interference prone areas, on both sides of major river crossings and minimum one for every 10 km (max.) alongwith pipeline.

6.4.6 All test stations shall have weather proof enclosure, having degree of protection IP 55 with hinged lockable shutter. Enclosure shall be made of sheet steel of at least 3 mm thickness and shall be suitable for M.S. post mounting. The test stations shall be designed with terminals required for both temporary and permanent CP system and shall be suitable for total life of permanent CP system.

6.4.7 The test stations shall be installed with the front of the test station facing the pipeline. The name plate of test stations shall in minimum carry following information.

- Test station number
- Chainage in km
- Test station connection scheme type
- Distance from pipeline in meters
- Direction of product flow

6.4.8 Terminal blocks and different scheme of wiring as required shall be provided in the test station as per the test station connection scheme sketch. Minimum 20% spare terminals shall be provided in each TLP.

6.4.9 The location of all the test stations shall be marked with their connection schemes and other relevant information's on alignment sheets. A detailed test station schedule shall be prepared.

6.5 Surge diverter, Grounding cell and Polarisation cell

6.5.1 Where high voltage (66 KV and above) transmission line runs in parallel or crosses the pipeline, the pipeline shall be grounded through polarisation cells (Solid State) & zinc anodes of minimum 20 kg net wt. each. Grounding shall be done at regular intervals of maximum 0.5 km where transmission lines run parallel within 100 meter of the pipeline (Both side of ROW) through polarisation cell to ground any surges on the pipeline that would appear in case of transmission line faults.

6.5.2 In case of continuous induction of voltage on the pipeline beyond safe limits is expected or observed during commissioning due to HV Line or other of any rating, the pipeline shall be grounded to a separate earthing system of Zn galvanic anodes/Zn Ribbon anodes/ Pre-packed AC mitigation wire through polarisation cell.

6.5.3 Explosion proof Surge Diverter (Spark Gap Arrester) shall be connected across each insulating joint to protect it from high voltage surges as per drawing.

6.5.4 The total system including cables, cable termination, anodes/ surge diverters, polarization cells shall be suitable for the anticipated fault current at the location of installation.

6.5.5 Unless otherwise specified on data sheet, the minimum rating of grounding cells, polarisation cells and surge diverters shall be as below:

(i) Polarisation cell

- Type : Solid state (Min. 3.7 kA @ 30 Cycle) or as per scope of work/PJS

- Rating : Suitable to pass Min 5KA or more surge

(ii) Surge Diverter (Spark Gap Arrester)

- Type : Spark gap, Explosion Proof Type
- Current, 8/20 wave : 100 kA
- Spark over AC voltage :
- 50 Hz : 1 kV
- Impulse (1.2/50) micro sec) : 2.2 kV

6.5.6 Grounding system, Surge Diverter (Spark Gap Arrester), and polarisation cell system shall be sized for the design life of permanent CP system. The zinc or magnesium anodes meant for pipeline grounding shall also be sized for the life of the permanent CP system taking into account the current discharge from the anodes. The grounding system shall have minimum resistance to earth to restrict the pipeline voltage as per NACE / VDE criteria but shall not exceed 2 ohms. The anodes shall be pre packed with special backfill adequately so that the performance of the anode is not affected by the carbonates, bicarbonates, nitrates, etc. present in the soil. In any case, the thickness of back fill shall not be less than 50 mm on all the sides of the anode.

6.5.7 In case of HT transmission overhead lines of voltage below 66KV also requisite mitigation measures should be provided to take care of continuous induction of voltage interface due to presence of transmission line in close proximity. The pipeline shall be grounded through polarization cell to earth system of HV tower causing the voltage induction or to a separate earthing system of zinc anodes through polarization cell. Pipe to soil AC PSP data shall be recorded for at-least 72 hrs at each HT (11 KV & above) line crossing the pipeline and running parallel.

6.5.8 Motor operated valves where located on the cathodically protected portion of the pipeline shall be grounded by a zinc or magnesium anode of 20 kg net where the type of anode provided for the CP system of the pipeline is zinc or magnesium respectively. The MOV power supply cable armour shall be insulated (by cutting and taping with insulation tape) at MOV end to avoid armour carrying CP current.

6.5.9 The above ground cathodically unprotected pipeline at intermediate SV stations, pigging stations, etc. and terminals shall be earthed with GI earth electrodes along with connection to the station main earth grid. The resistance to earth of grounding shall be limited to 2 ohms max.

6.6 Polarisation Coupons

The coupon shall have one side exposed area of 10 mm x 10 mm (or as decided in detail engineering to simulate the discharge current from coating holiday) unless other wise specified in project specification/data sheet. The Polarisation Coupons shall be made from the material of the pipeline. Cable connection of 10 mm2 and 4 mm2 shall be provided to the coupon for connecting it to pipeline for cathodic protection and potential measurements respectively. Connection of

coupon to pipeline shall be through a vacuum sealed magnetic reed switch housed inside the test station/ rapid disconnection switch. The magnetic reed switch shall be rated to carry and break minimum 10 mA at 50 V DC.

Polarisation coupons shall be provided as per the requirement of NACE SP104:2014.

6.7 Electrical Resistance Probe

6.7.1 Where specified in project specifications, electrical resistance probes utilising the electrical resistance technique shall be provided along the pipeline at marshy areas and at vulnerable locations to monitor the external corrosion activity on the pipeline. The lead wires of the probe shall be connected to pipeline and terminated inside test station enabling periodic resistance measurement with the probe using a portable measuring instrument.

6.7.2 The material of the E/R probe element shall be of the same alloy as of the pipeline material. The E/R probes shall be provided preferably at the bottom portion of pipeline. The locations of E/R probes shall be got approved. Portable E/R probe reading instrument shall be supplied by contractor as per SOR/Data Sheet. The probe reading instrument have IP-55 protection & digital display.

6.8 CP at Cased Crossing

At cased crossings where casing is provided, the casing shall be protected by sacrificial anode installations. The sacrificial anode installations shall be provided at both ends of casing. The anode installation shall be sized based on permanent C.P. design parameters specified for the main pipeline.

For Coated Casing protection for carrier pipe by ribbon anodes shall be provided and detailed calculation shall be submitted for approval.

For Bare Casing (Uncoated or Un-Painted) protection for carrier pipe by ribbon anodes may not be provided and as far as possible bare casings shall be used for cased crossings.

6.9 Reference Cell Access Points

Reference cell access points shall be provided near insulating joint locations and at SV stations, where the ground is paved, for measurement of pipe to soil potentials. A perforated PVC pipe filled with native soil and buried at the location shall be provided for the purpose. The length of the PVC pipe shall be adequate to reach the native soil below the paving.

6.10 Painting

The sheet steel used for fabrication shall be thoroughly cleaned and degreased to remove mill scale, rust, grease and dirt. Fabricated structures shall be pickled and then rinsed to remove any trace of acid. The under surfaces shall be prepared by applying a coat of phosphate paint and a coat of yellow zinc chromate primer. The under surfaces shall be free from all imperfections before undertaking the finished coat. After preparation of the under surface, spray painting with two coats of final paint shall be done. The finished panel shall be dried in oven in dust free atmosphere.

Panel finish shall be free from imperfections like pin holes, orange peels, run off paint, etc.

All unpainted steel parts shall be painted with corrosion resistance paint as per approved procedure.

6.11 TCP Cables

TCP Cables shall be annealed high conductivity, tinned, stranded copper conductor, XLPE insulated 650/1100 V grade, armoured/un-armoured, PVC sheathed. The size of the copper conductor shall be 6 sq mm for anode cable from anode to buried junction box, 10 sq mm from junction box to test station, 10mm² from test station to pipeline. The size of the conductor shall be 6 sq mm for potential measurement, 10 sq.mm for current measurement and 25mm² for bonding, polarisation cell/grounding cell/Earthing and surge diverter connection purpose. The anode cable from anode to junction box (buried) shall be unarmoured. The length of anode tail cable shall be sufficient enough to reach junction box (buried) in case of temporary CP anodes and up to test station in case of permanent CP sacrificial anodes. PE Sleeves shall be provided for unarmoured cables.

7.0 INSTALLATION

7.1 Cable Laying

7.1.1 Cables shall be laid in accordance with approved layout drawings to be prepared by the contractor. No straight through joint shall be permitted in a single run of cable. Cable route shall be carefully measured and cables cut to required length. Minimum ½ metre cable slack shall be provided near anodes, pipeline and test stations to account for any settling.

7.1.2 All cables inside station/plant area shall be laid at a depth of 0.75 M. Cables outside station/plant area shall be laid at a depth of 1.5m. Cables shall be laid in sand under brick cover back filled with normal soil. Outside the station/plant area the routes shall be marked with Polyethylene cable warning mats placed at a depth of 0.9m from the finished grade.

7.1.3 All underground unarmoured cables forming part of permanent CP system shall run through PE sleeves. Cables along the pipeline shall be carried along the top of the pipe by securely strapping it with adhesive tape or equivalent as required.

7.1.4 Hume pipe of proper size shall be provided for all underground cables for road crossings.

7.1.5 Cables shall be neatly arranged in trenches in such a manner that criss-crossing is avoided and final take off to equipment is facilitated.

7.1.6 In case of above ground cable, all unarmoured CP cables shall be laid in GI conduits of sufficiently large size, up to accessible height for protecting against the mechanical damage.

7.1.7 The armour of all the cables from pipeline to test station (potential measurement, reference cell cables, cathode cables, etc.) and test station to ground bed (anode cable) shall be earthed only at test station end of the cable to avoid armour carrying CP current. The cable armour shall be insulated by cutting and taping with insulation tape.

7.2 Cable to Pipe Connections

All the cable connections to the pipeline including charged foreign pipeline shall be made using an approved exothermic process. A suitable water proof sealing system of the cable connections shall be made which will be compatible with parent coating system of the pipeline after exothermic process. The resistance of cable to pipe at the connection point shall not exceed 0.1 ohm. Coating shall be repaired after connection of cable conductor to pipeline. The coating repair material shall be compatible with the original coating and shall prevent ingress of water along the cable surface and at the interface of coating repair with the original pipe coating.

For charged pipeline pin-brazing shall be used. Eutectic solder shall not be acceptable for charged or non-charged pipeline.

8.0 CIVIL WORKS

All civil works associated with the complete cathodic protection work shall be included in the scope of contractor. This shall include providing cable trenches, foundation for equipment and all test stations, etc.

9.0 TESTING AND INSPECTION AT WORKS

9.1 OWNER/OWNER's representative shall visit the works during manufacture of various equipment to assess the progress of work as well as to ascertain that only quality raw material is used for the same. All necessary assistance during such inspections shall be provided.

9.2 The minimum testing, inspection requirements for all components/ equipments shall confirm to the requirements as defined in the relevant codes and standards. Detailed inspection and testing procedures along with the acceptance criteria shall be prepared by CONTRACTOR for OWNER's approval.

9.3 Test certificates including test records, performance curves etc., shall be furnished. All test certificates shall be endorsed with sufficient information to identify equipment to which the certificate refers to and must carry project title, owner's name and purchase order details etc.

9.4 Owner reserves the right to ask for inspection of all or any item under the contract and witness all tests and carry out inspection or authorise his representative to witness test and carry out inspection. CONTRACTOR shall notify the OWNER or OWNER's representative at least 20 days in advance giving exact details of tests, dates and addresses of locations where the tests would be carried out.

10.0 PACKING AND TRANSPORT

All equipment/material shall be protected for inland/marine transport, carriage at site and outdoor storage during transit and at site. All packages shall be clearly, legibly and durably marked with uniform block letters giving the relevant equipment/material details. each package shall contain a packing list in a water proof envelope. Copies of the packing list in triplicate, shall be forwarded to owner prior to despatch. All items of material shall be clearly marked for easy identification against

the packing list.

11.0 SYSTEM TESTING, COMMISSIONING AND INTERFERENCE MITIGATION

11.1 System testing at site.

11.2 Contractor shall furnish the detailed field testing and commissioning procedure for approval. Field tests as per the approved procedures shall be carried out on the equipment/systems before being put into service. the acceptance of the complete installation shall be contingent upon inspection and field test results.

11.3 Before the CP facilities are placed in operation all necessary tests shall be carried out to establish that all equipment, devices, wiring and connection, etc., have been correctly installed, connected and are in good working condition as required for intended operation.

11.4 Owner/owner's representative may witness all the tests. At least one week's notice shall be given before commencing the tests.

11.5 All tools, equipments and instruments required for testing shall be provided by CONTRACTOR.

11.6 Generally following tests shall be carried out and recorded in proforma given in subsequent clauses:

Checking : Visual inspection, comparison with drawings and specifications.

Inspection : Detailed physical inspection

Testing : Simulation tests of equipment to determine its operational fitness.

Cables

- Cable no.
- Voltage grade
- Conductor cross-section
- Continuity check
- Voltage test
- Insulation resistance values between core to earth and between cores
- All cables shall be tested by 500 V megger

Insulating joint

Checking of insulating joint for leakage, before and after energisation of C.P. by means of insulating joint tester. Pipe to soil potential of both protected and non-protected sides of insulating joint shall be checked before and after energistaion of CP system.

Polarisation cell

- Location/identification number
- Rating
- Check for wiring
- Check for standby current drain with CP energisation (current drain with respect to voltage across the cell shall be recorded)
- Details of grounding provided for polarization cell.

Grounding cell

- Location
- Type (no. of anodes)
- Ratings

Surge diverter

- Location/identification no.
- Ratings
- Check for healthiness
- Explosion proof enclosure
- Check for proper connection.

E/R Probe

- Location / Identification number
- Checking of wiring as per schematics
- Resistance reading of probe

Anode ground beds

- Location/test station number
- Current output of the ground bed
- Vertical / horizontal
- Check for actual layout and compliance with drawings.

11.7 Commissioning

11.7.1 Natural pipe to soil potential shall be measured at each test station location and casing pipeline at the locations of cased crossings prior to connecting anodes to pipeline. The pipe to soil potential observation shall be repeated after connecting the anodes after allowing sufficient time for polarisation. The current output of the anode installation shall also be measured to ensure that it does not exceed the output current capacity of the anodes. In case the anode output current exceeds the rated capacity it shall be controlled by insertion of resistance element in the anode circuit inside test station and the pipe to soil potential shall be rechecked for adequacy of protection. Additional anodes shall be provided where required to achieve desired level of protection. In case pipe to soil potential exceeds the specified value, suitable resistance shall be inserted in the anode circuit to limit the potential.

Each anode installation shall become individually operational as above.

11.7.2 After connecting all the anode ground beds to pipeline, measurement of pipe to soil potentials shall be taken at each test station to ensure conformity to protection criteria along with coupon data.

11.7.3 In case of insufficient protection as per the CP design criteria on any portion of the pipeline, CONTRACTOR shall carry out necessary additions modification to the provided protection in consultation with the OWNER / OWNER's Representative.

11.7.4 Resistance readings of the probe shall be taken at all the locations of electrical resistance probes.

11.8 Interference Mitigation

11.8.1 Investigation shall be made for stray current electrolysis of the pipeline, mutual interface between the pipeline and foreign pipelines / structures, interference on foreign pipeline / structures due to the CP of the pipeline and ground bed. AC induction on pipeline due to overhead high voltage line, interference due to high voltage DC lines & grounding, electric traction, etc.

11.8.2 Where transmission lines cross the pipeline or run in parallel within or more than 25m from the pipeline, AC voltage measurements shall also be made on the pipeline to find out continuous induction of voltage. In case of induced voltage being beyond safe limits, the pipeline shall be grounded in line with clause no. 6.4 above.

11.8.3 Measurements including pipe to soil potential and pipeline current etc., on the pipeline/structure being CP protected shall be made to investigate the current discharge and collection locations.

11.8.4 In case of fluctuating stray currents investigation shall be made continuously over a period of time and if required simultaneously at different locations to find out the stray current source. For long time measurements, recorders shall preferably be used.

11.8.5 Where foreign pipeline (unprotected or protected by independent CP system) runs in parallel to the pipeline in same trench or very near to the pipeline, and is not bonded to the pipeline then investigation shall be made for current discharge points on both the pipelines.

11.8.6 Mitigation measured shall be provided depending on type of interference. These shall include installation of bond with variable resistor and diodes, installation of galvanic anodes for auxiliary drainage of current, adjustment/relocation (if possible) of offending interference source, provision of electric shield etc., depending on the type of interference.

11.8.7 Bonding with foreign pipeline/structure as a mitigation measure shall be provided where the owner of the pipeline/structure has no objection, otherwise, alternative mitigation measure shall be provided. Where bonding is provided for mitigation the bonding resistor shall be adjusted for optimum value for minimum/no interference. Galvanic anodes installed as a mitigation measure shall be sized for the life specified for permanent CP.

12.0 <u>SYSTEM MONITORING</u>

The temporary CP system provided shall be monitored at all the test stations once in a month for healthiness/adequacy of protection till commissioning of permanent CP or for design life of temporary CP specified, whichever is earlier. During this period if any deficiency/interference in protection system is noticed the same shall be rectified/augmented by additional anodes as required. The monitoring report shall be submitted regularly to owner to review.

13.0 DRAWINGS AND DOCUMENTS

13.1 General

13.1.1 Within three weeks from the date of issue of PURCHASE ORDER, CONTRACTOR shall submit four copies of the list of all drawings/ datasheets/ manuals/ procedures for approval, identifying each by a number and descriptive title and giving the schedule date. This list shall be revised and extended, as necessary, during the progress of work

13.1.2 All drawings and documents shall be in English and shall follow metric system. Number of copies of each submission shall be as follows unless otherwise specified.

	Submission	No. of Copies
a.	For review/approval	4
b.	Drawings issued for execution construction	5+1
c.	Final / As built drawings execution/construction	5+1
d.	Operation/Maintenance manual, vendor data	5+1

13.2 Contract drawings and documents

13.2.1 As a part of the contract, drawings and documents shall be furnished which shall include but not be limited to the following:

a. Report on corrosion survey
b. Basis of system design calculations, equipment selection criteria and sizing calculations.
c. Bill of material, material requisitions, purchase requisitions

13.2.2 Detailed construction drawings (including as built drawings)

a. Sacrificial anode fabrication drawings
b. Typical layout drawing for anode ground bed installation and connection
c. Equipment layout, cable layout and schedules
d. Fabrication, installation and connection scheme drawing for different types of test stations.
e. Fabrication and installation details of surge diverter, grounding cell and polarisation cell with its enclosure and housing

f. Cable-to-pipe joint details for charged and non-charged pipelines.
g. Incorporation of anode beds, polarisation cell, surge diverters, test stations, etc., and other relevant features of CP system design in Pipeline alignment sheet and other related drawings
h. Identification of section of pipeline affected by interference, source of interference and details of interference mitigation arrangements provided. various measurement data at all relevant test stations with and without mitigation measures provided.
i. Detailed commissioning report including various measurement data at all test stations, etc.
j. Vendor drawings and catalogues, test certificates
k. Operation and maintenance manual
l. Miscellaneous

- Equipment inspection and testing procedure
- Construction, installation procedures
- Field testing and commissioning procedures
- Procedure for monitoring of cathodic protection after commissioning
- Quality control procedures

14.0 INSTRUMENT, TOOLS AND SPARES

14.1 CONTRACTOR shall supply all instruments, tools and tackles necessary for proper operation and maintenance of complete cathodic protection system and associated equipment.

14.2 CONTRACTOR shall provide a list of spares and consumables required for proper operation and maintenance of part of cathodic protection system to be integrated with permanent CP system designed on the basis of permanent CP design parameters and associated equipment, for two years operation of the system.

15.0 INFORMATION REQUIRED WITH THE BID

Refer scope of work/PJS for the information required along with Bid.

-X-X-X-

IV. SURVEY REPORTS

(GEOTECHNICAL INVESTIGATION REPORT)

(GEOTECHNICAL INVESTIGATION REPORT)

1. TANGANI RIVER

IGGL

5th Floor, Central Mall, Christian Basti,
GS Road, Guwahati, Assam 781005

PROJECT

TOPOGRAPHICAL SURVEY & GEOTECHNICAL INVESTIGATION, PROVIDING SERVICES FOR ESTABLISHING ROU IN ROW AND OBTAINING PERMISSION FOR PROPOSED NATURAL GAS PIPELINE GRID IN NORTH EAST INDIA FOR GROUP A

GUWAHATI - NUMALIGARH - ITANAGAR - DIMAPUR NATURAL GAS PIPELINE PROJECT

Tangani River CH. 51+690.18Km.

GEO-TECHNICAL INVESTIGATION REPORT

SURVEY AGENCY:

S.K.P. PROJECTS PVT. LTD.

Head Office:- 201-205, Sai Samarth Complex,
Makarpura Road, Vadodara – 390 013.
Ph. No. 7228940501, 7228940502
E-mail : skp@skpprojects.com ,
Web: **www.skpprojects.com**

ISO 9001:2015

INTRODUCTION

Indradhanush Gas Grid Limited (IGGL) is a Joint Venture of IGGL, ONGC, GAIL, OIL and NRL. IGGL was incorporated on the 10th of August 2018, towards implementing the Hydrocarbon Vision 2030 for North-East India released by Ministry of Petroleum & Natural Gas in 2016. Hydrocarbon Vision 2030 envisages North-East India economic development by leveraging the region's Hydrocarbon potential, enhancing access to clean fuel and accelerating the growth of entire North East India.

As per plan on the Vision Document, The Gas Grid Project connects eight North-Eastern State, Assam, Arunachal Pradesh, Meghalaya, Manipur, Mizoram, Nagaland, Tripura and Sikkim, to the national Gas Grid through Barauni-Guwahati Gas Pipeline. From Guwahati, the pipeline extends to Numaligarh, Dimapur, Kohima and Imphal in one direction, Shillong, Silchar, Aizawl and Agartala in the second direction and to Itanagar in the third direction. Gangtok gets connected to Siliguri from the gas pipeline coming from Barauni to Guwahati.

The natural gas grid in North east is planned to connect with upcoming Barauni-Guwahati natural gas pipeline as a part of Urja-Ganga scheme. The grid would also connect to sustainable and viable gas sources in North-east.
With a vision to develop North east region as a dominant hydrocarbon hub at the forefront of India's energy economy, "Hydrocarbon Vision 2030 of North East India" has been developed by Ministry of Petroleum and Natural Gas (MoPNG). One of the objective of the vision is transition towards use of sustainable forms of energy by developing a natural gas grid and CNG highways that will inter connect the States in the North east region as well as with National gas grid, which will increase consumption of natural gas as a fuel of choice.

The work of Carrying Out Detailed Engineering Survey and Soil Survey and Providing Services for Establishing of RoU in RoW for proposed Group: A

(Guwahati - Numaligarh - Itanagar - Dimapur Natural Gas Pipeline Project) has been awarded to **M/s. SKP Projects Pvt. Ltd.** Vadodara vide Work Order No. **IGGL/C&P/LOA/SKP-BSW/09-19,** dated **28.09.2019.**

Further, the work of laboratory tests, chemical tests for soil/water samples and preparation of test report has assigned to **M/s. Geo Test House,** Vadodara by M/s. S.K.P. Projects Pvt. Ltd., Vadodara.

The present report covers the details of boreholes drilled at Ch. 51+690.18Km. Tangani River Cross section of sub-soil profile noticed in the boreholes, carry out field and laboratory investigation, sampling, codes and standards followed for conducting the tests along with the data interpretations and engineering analysis.

Location: Tangani River (Ch. 51+690.18 km)

Sr. No.	Name of Crossing	Bore Hole No.	Terminated Depth (m)	G. W.T. Below G.L.(m)
1	Tangani River	BH 49A	25	0.00
		BH 49B	25	0.00
		BH 49C	25	0.00
		BH 49D	25	0.00
		BH 49E	25	0.00
		BH 49F	25	0.00
		BH 49G	25	0.00
		BH 49H	25	0.00
		BH 49I	25	0.00
		BH 49J	25	0.00
		BH 49K	25	0.00
		BH 49L	25	0.00
		BH 49M	25	0.00

Sr. No.	Bore Hole Identification	Co-ordinate		Remarks
		Easting	Northing	
1	BH 49A	412658.328	2943271.294	
	BH 49B	412708.986	2943289.564	
	BH 49C	412733.069	2943337.731	
	BH 49D	412783.726	2943356.001	
	BH 49E	412807.810	2943404.168	
	BH 49F	412858.467	2943422.938	
	BH 49G	412882.550	2943470.604	
	BH 49H	412928.562	2943484.745	
	BH 49I	412947.999	2943528.781	
	BH 49J	412998.657	2943347.952	
	BH 49K	413022.740	2943595.218	
	BH 49L	413073.397	2943613.488	
	BH 49M	413097.480	2943661.655	

SCOPE OF WORK

The scope of this survey includes drilling boreholes to determine the probable sub surface conditions such as stratification, denseness of the strata, position of ground water table etc. and conducting necessary field tests and to collect Disturb and undisturbed soil samples for laboratory testing and submission of detailed report to IGGL for review and approval.

2.1 By Shell & Auger

- Agency has carried out boreholes of 150mm diameter. The exploratory work at site shall be carried out using shell and auger equipment. The boreholes shall be terminated at a depth, whenever with chiseling and subsequent cleaning with bailer, the bore hole cannot be advanced more than 300mm in one hour.

- The casing shall be extended up to a maximum depth which could be possible as per site conditions. No bentonite mud shall be used to advance boring. Chiseling shall be carried out with minimum 0.5mm tone cross type chisel falling from a height of 2.0m. Chiseling and cleaning with bailer shall be done alternately, each operating from 5 to 10 minutes. Refusal to chiseling shall be considered after one hour of chiseling or when progress is less than 30 cm for each 200 drops, whichever is later.

- The bore holes thereafter shall be extended by core drilling method using Nx size drilling bits until 50% core recovery is achieved. Cores shall be properly preserved in core boxes and shall be handed over to IGGL if required. Whenever clay or other soft material is interspersed in rocky strata, the drilling shall continue deeper into rock to ascertain such formation.

- Disturbed samples from boring shall be collected as per scope and representative samples placed systematically for proper logging of the strata.

The existing ground level shall be marked. Proper logging shall be done with description of different strata encountered with their reduced levels.

- (Profile of the different strata shall be plotted joining all adjacent boreholes apart from individual boreholes. All bore holes after completion of work shall immediately be filled in with a mixture of bentonite slurry and clay sand mixture).

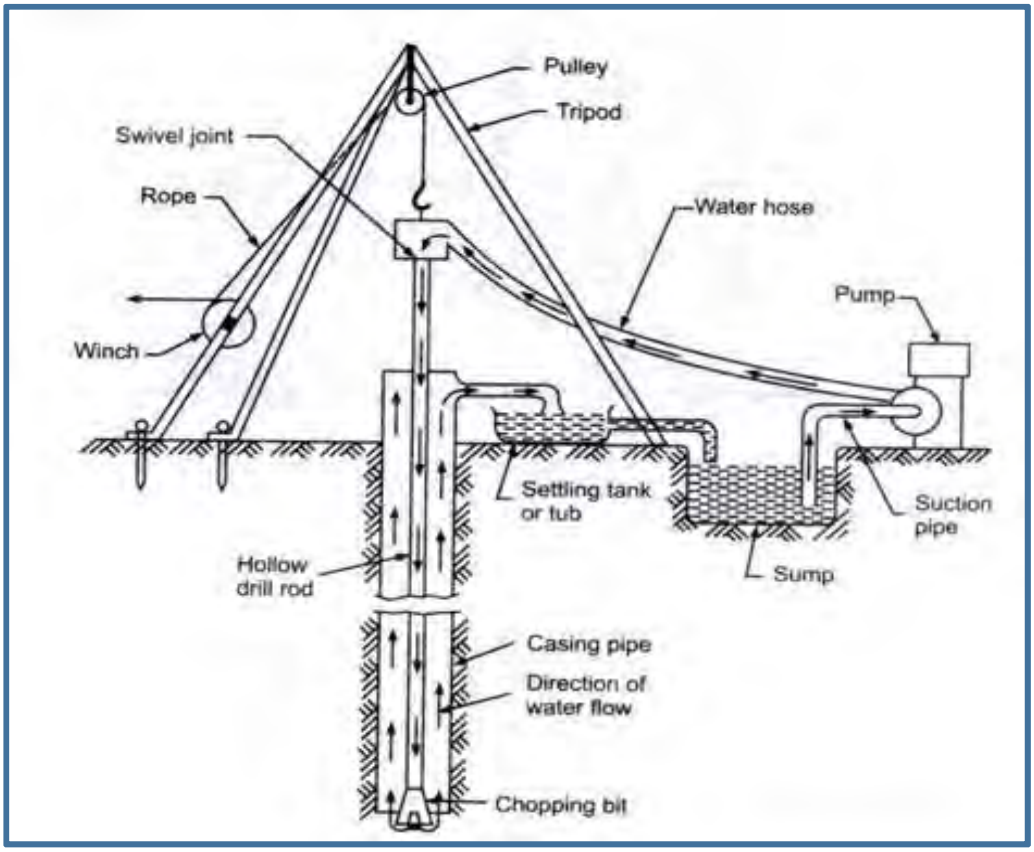

2.2 By Mud Circulation Drilling

- In case the site conditions require the bore drilling shall be employed using Mud circulation method. It should be adopted in all type of soils. Minimum diameter of bore holes shall be 150mm if the rate of progress of boring in hard strata is observed to be slow (Not more than 20 cm in two hours) contractor may be permitted to adopt core drilling with Nx size bit.However, the bit for core drilling shall be with double tube core barrel and this core drilling operation shall be at no extra cost to the owner so long as to core

recovery is less than 25%. Commencement of rock coring shall be considered at a depth below which the core recovery is min 25%. For rock strata encountered having RQD 50% Diamond Head of Nx size drilling bits shall be used.

- Termination of bore holes shall be as indicated below. Max length cored in rock shall be limited to 10 x Nx if rock available within 2.0m from the Bed/GL level. Length of rock coring will decrease linearly.

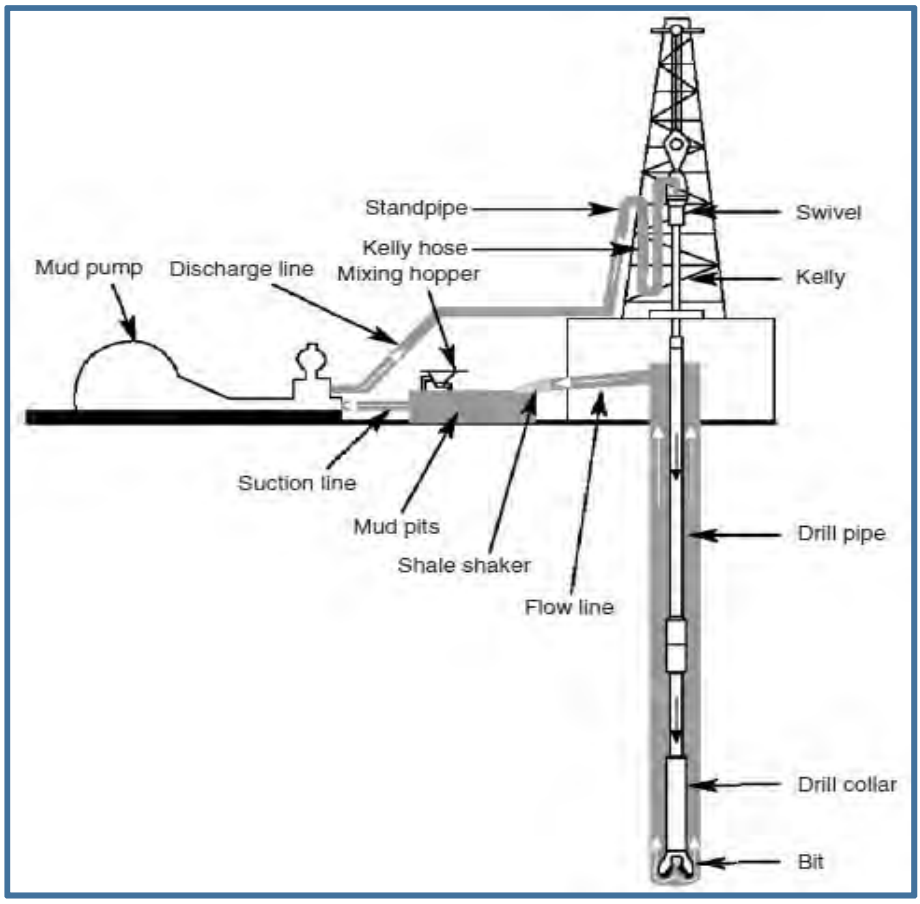

2.3 Method of Sampling

- In cohesive and semi cohesive soils, undisturbed samples conforming to IS:2132 shall be taken using open tube samples with an area ratio of less than 15% so as to obtain a core of sample of 100mm diameters and 450mm long at every change in stratum or at intervals of 5.0 meter whichever is less. The tube shall be properly marked and the ends of the sample tube shall be sealed properly with wax of thickness not less than 25mm and capped properly immediately after the sample is recovered from the bore holes to ensure no loss of moisture with time while retained in the tube. Sample tubes shall be immediately shifted to the laboratory for testing.

2.4 Disturbed Sample collection

- During the advancement of the boring Disturbed samples are collected from auger cuttings or from split spoon sampler of SPT.

- Disturbed soil samples shall be placed in suitable jars labeled properly for onward transmission to the laboratory. These samples shall be sent to the laboratory immediately after the boring is completed. All SPT samples shall also be similarly preserved.

2.5 Undisturbed Sample collection

- During the advancement of the boring Undisturbed samples are collected at suitable interval depending on the soil strata.Normal interval for undisturbed is 5m or at the change of strata whichever occurs earlier. First samples shall be taken at 2.0m depth. For stiff clay area ratio of the sampling tubes shall not exceed 20%. In soft deposits, piston samples shall be used to collection UDS. Undisturbed soil samples were collected in 100mm diameter thin walled tube as per IS: - 2132 - 1986. The sampler used for the sampling had smooth surface and appropriate area ratio and cutting edge angle thereby minimizing disturbance of soil during sampling.

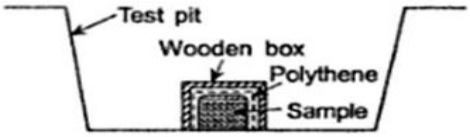

Fig. 2.5 Block sample of clay.

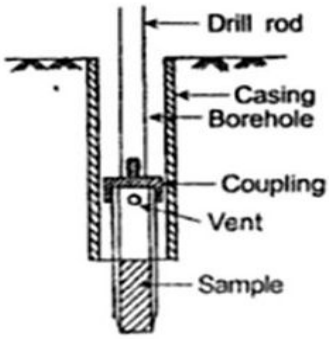

Fig. 2.6 Open drive sampler.

2.6 Standard Penetration Test (SPT)

- The standard penetration tests shall be conducted in boreholes at interval of 2.0m depth starting the first test at 1.0m depth below existing ground level up to 10.0m below ground level and there after every 3.0m interval or change of strata which ever is earlier.

- Last SPT shall be conducted at the termination depth of borehole. The disturbed representative samples shall be visually classified, labeled for identification, and properly preserved for laboratory testing. SPT shall be terminated at any depth when the number of blows exceeds 100 for a penetration of 30cm or less but disturbed samples shall be collected in 2.0m interval up to depth of investigation. All test equipment and tools shall confirm to relevant IS code of practice.

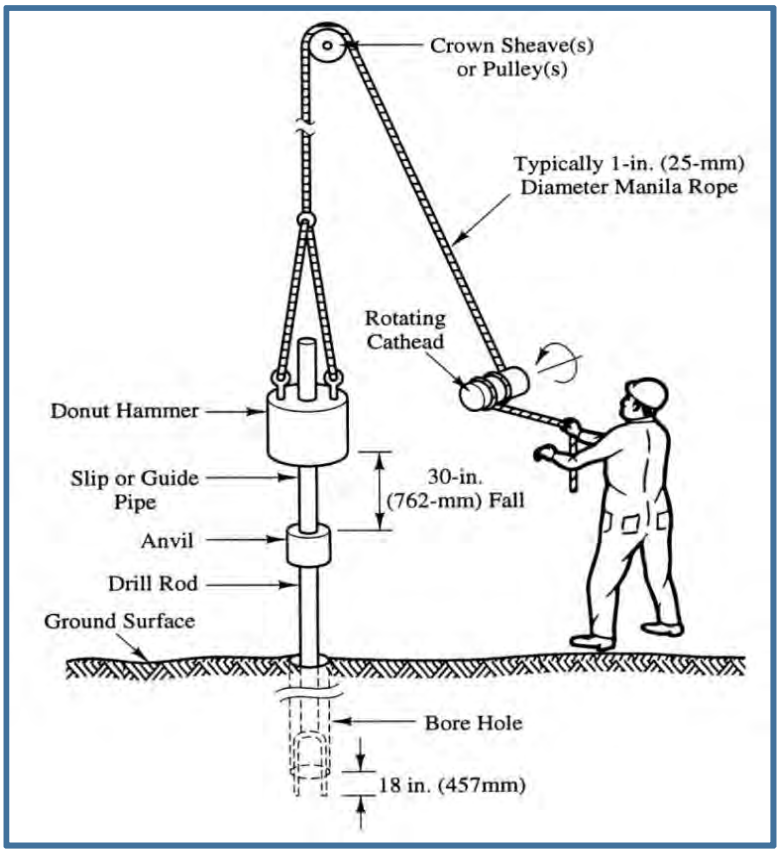

2.7 Core Drilling in Rock

- Core drills shall be so designed that in sound rock, continuous recovery of core is achieved. Water is circulated down the hollow rods, which returns outside them, carrying the rock cuttings to the surface as sludge. These shall be retained as samples in traversing friable rock where cores cant be recovered. It is important to ensure that boulders or layers of cemented soils are not mistaken for bed rock.

- This necessitates core drilling to a depth of at least 3m in bed rock in areas where boulders are known to occur. For shear strength determination, a core with diameter to height ratio of 1:1 is required. Rock pieces may be used for determination of specific gravity and classification.

2.8 Rock Core Recovery

- This is the ratio of the length of core recovered to length of core run and is expressed as a percentage. The parameter provides a useful guide to the quality of drilling operation.

  Total Rock core recovery defined as the quotient:

  TCR = (lsum of pieces/ltotal core run)

  lsum of pieces = Sum of length of core pieces

  ltotal core run = Total length of core run

2.9 Rock Quality Designation

- This is the total length of those pieces of core, which is 10cm in length or longer, expressed as a percentage of the run length. This provides a good indication of the quality of the rock mass.

  RQD is defined as the quotient:

  RQD = (lsum of length of core pieces>100mm/ ltotal core run)

  ltotal core run = Total length of core run

2.10 Standing Ground Water Level

- Records shall be maintained of the level at which water is struck and the level of any rapid inflow shall also be recorded. On reaching such level the borehole shall be left open for a period of two hours to observe the rise of water in the casing. Bore hole can be continued, thereafter, up to the end of the day.

- The level of water in the casing at the end of the day and at the beginning of the next day shall be recorded properly. For studying the ground water table no drilling mud will be permitted for stabilizing the hole.

2.11 Laboratory Tests

- Laboratory tests shall be conducted on selected samples collected from site to establish the physical and chemical properties of soil. Following tests shall be done as appropriate in accordance with latest relevant Indian code of practice.

2.11.1 Sieve Analysis
2.11.2 Hydrometer Analysis
2.11.3 Atterberg Limits
2.11.4 Natural Moisture Content
2.11.5 Bulk & Dry Density
2.11.6 Specific Gravity
2.11.7 Permeability Test
2.11.8 Consolidation Test
2.11.9 Direct Shear Test
2.11.10 Triaxial Test
2.11.11 Shrinkage Limit Test
2.11.12 Free swell Index Test
2.11.13 Swelling Pressure
2.11.14 UCS Test (Soil)
2.11.15 Chemical Test on soil & Water
2.11.16 UCS Test (Rock)
2.11.17 Specific Gravity (Rock)

METHODOLOGY

3.1 Sieve Analysis

- A sieve analysis is a practice or procedure used to assess the particle size distributionof a granular material by allowing the material to pass through a series of sieves of progressively smaller mesh size and weighing the amount of material that is stopped by each sieve as a fraction of the whole mass.

- Sieve analysis is conduct by the wet sieving method and Sieve shaker by passing through the following IS sieves: 4.75 mm, 2.36 mm, 425µ and 75µ.

3.2 Atterberg's Limits

- The Atterberg's limits are a basic measure of the critical water contents of a fine-grained soil and its Shrinkage limit, Plastic limit, and Liquid limit. Liquid limit and Plastic limits are carried out for the determination of different characteristic of soil.

- The tests performed in accordance with I.S.2720 P-5-1985 by using Con Penetrometer. Liquid limit and plastic limit of soils are both depend up on the amount and type of clay in a soil and form the basis for the soil classification system for cohesive soils based on the Plasticity index.

- The liquid limit of the soil with corresponds to the moisture content of a paste which would give 20mm penetration of the cone is determined by using following formula.

$$WL = Wx / (0.65+0.0175*X).$$

Where, X = Penetration of cone in the sample

Wx = Moisture Content of the soil sample at the respective penetration

- For Plastic Limit, a soil sample weighing at least 20 gm of the soil sample passing 425 micron IS sieve is thoroughly mixed with water such that it can be easily molded with fingers.

- A ball is formed with about 8 to 10 gm of this soil and is rolled between the fingers and the glass plate with just sufficient pressure to roll the mass into a thread of uniform diameter of 3mm throughout its length. The soil is kneaded to a uniform mass and rolled again. The process is continued until the thread crumbles.
- The pieces of crumbled soil thread are collected for moisture content determination and reported as plastic limit. Values of LL, PL & PI are shown in summary III.

3.3 Natural Moisture Content

- Test procedure conforms to IS: 2720 (Part II). A moisture cup is loosely filled with soil sample and weighed with lid. It is then kept over oven with lid removed and maintained at temperature of oven at 110°C for 24 hours. The lid of the container is then replaced and the dry weight found out. The percentage of water content has been calculated using the formula.

$$W = w2 - w3 \times 100/w3-w1$$

Where,

W = moisture content (%)

w1 = weight of container with lid, in gm.

w2 = weight of container with wet soil, in g.

w3 = weight of container with dry soil, in g.

3.4 Bulk & Dry Density

- Bulk and dry density were carried out in accordance with IS: 2720(Part-2 – 1983). The field density is found out by following equation.

Field Density (bulk) = Weight of soil mass / Volume of soil mass

And,

Field Dry Density = Bulk Density/ (1 + w),

Where, w is field moisture content.

3.5 Specific Gravity (IS: 2720 Part III)

- In order to determine the specific gravity of soil particles these tests were conducted on selected samples in 50ml volumetric density bottle using procedure described in IS. The value of Specific Gravity is shown in summary.

3.6 Permeability Test (IS: 2720 Part XVII)

- Test was carried out on undisturbed soil specimen in order to determination of co-efficient of permeability of soils using falling head and the constant head methods. This test is recommended for soils with coefficient of permeability in the range 10-3 to 10-7 cm/sand maximum particle size of 9.5mm.

3.7 Consolidation Test (IS: 2720 Part XV)

- Test was carried out on undisturbed soil specimen in order to determine the settlement characteristics of soil at different depths. Sample is extruded to the consolidation ring of 60mm dia.

- The edge is trimmed carefully such that the sample flushes with the top and bottom edges of the ring. The thickness of the specimen is measured and the weight is recorded. The bottom porous stone is then centered on the base of the consolidation cell.
- The specimen is placed centrally between the bottom porous stone and the upper porous stone. A filter paper is provided in-between specimen and porous stones. The consolidometer is placed in position in the loading device and suitably adjusted.

- Dial gauge is clamped into position for recording the relative movement between the base of the cell and the loading cap. A seating pressure of 0.05 kg / sq. cm is applied to the specimen. The cell is kept filled with water. After 24 hrs the test is continued using a loading sequence on the soil specimen of 0.25, 0.50, 1.00, 2.00, 4.00 & 8.00 kg / sq. cm.
- For each loading increment after application of load, readings of the dial gauge is taken using time sequence 0, 0.25, 1.00, 2.25, 2, 6.25, 9, 16, 25, 36, 49 … up to 24 hrs. From the observations of all incremental pressure, void ratio versus log (pressure) curve is obtained. The slope of the straight line portion shows compression index Cc.

3.8 Direct Shear Test (IS: 2720 Part XIII)

- Direct Shear Test is a strength test, which is performed on the soil sample to determine the value of angle of internal friction.The direct shear test is generally conducted on cohesion less soil as consolidated drained (CD) test.

3.9 Triaxial Shear Test- (IS: 2720 Part XI)

- Triaxial Shear Test is a strength test, which is performed on the soil sample to determine the value of cohesion and angle of internal friction. In the present case, test samples were prepared from undisturbed samples and were tested in the Triaxial Apparatus with UN-drained / drained condition and UN-consolidated / consolidated condition simulating the actual site conditions.

3.10 Shrinkage Limit Test (IS: 2720 Part VI)

- Shrinkage limit Test carried out for the determination of different characteristic of soil. 100 gm of soil sample from a thoroughly mixed portion of the material passing through 425 micron IS Sieve is taken.
- About 30 gm of above soil sample is placed in the evaporating dish and thoroughly mixed with distilled water to make a paste, And dish is filled in three layers by placing approximately 1/3rd of the amount of wet soil with the help of spatula.

- The wet soil cake air dried until the colour of the pat turns from dark to light. Then it is oven dried at 1050 to 1100 C then the weight of oven dry soil pat is calculated (W0). Than the shrinkage dish is filled with mercury and then it is be pressed with plain glass plate to remove excess mercury.
- The mercury from the shrinkage dish is poured into a measuring jar and the volume of shrinkage dish is calculated. This volume is recorded as the volume of the wet soil pat (V). Then the oven dried soil pat is placed on the surface of the mercury in the cup and pressed by means of glass plate with prongs, the mercury so displaced by the dry soil pat is weighed and its volume (V0) is calculating by unit weight of mercury.

3.11 Free Swell Index Test - (IS: 2720 Part XL)

- Free Swell Index Test carried out for the determination of different characteristic of soil. The representative oven dried soil sample each of 10 gm. passing through 425 micron sieve. For each soil sample in to each of the two glass graduated cylinders of 100 ml capacity, fill one cylinder with kerosene and other with the distilled water up to 100 ml mark. Place it for 24 Hrs. and record the volume of each cylinder.

3.12 UCS Test (IS: 2720 Part X)

- The purpose of this laboratory test is to determine the unconfined compressive strength of a cohesive soil sample. This is an unconsolidated undrained test (UU or Q type) test where the lateral confining pressure is equal to zero.

3.13 UCS Test (Rock) (IS: 9143)

- The UCS Test of rock is measure of a material's strength. The unconfined compressive strength is the maximum axial compressive stress that a right cylindrical sample. Sample placed in loading frame and apply axial load continuously and without shock until the load become constant, reduce, or a predetermined amount of strain is achieved.

- The stress rate or strain rate selected should be that which produces failure in the test time between 2 to 15 minutes.

DESIGN: -

- Classifications of Rock as per RMR Value are presented below in Table - 1. And the Safe Bearing Pressure based on RMR value is tabulated in Table 2.

3.14 SBC BASED ON RMR VALUE (IS 12070)

Table-1: ROCK MASS RATING

Parameter	Assessment of values and rating				
Intact rock UCS, MPa Rating	>250 15	100-250 12	50-100 7	25-50 4	1-25 1
RQD% Rating	>90 20	75-90 17	50-75 13	25-50 8	<25 3
Meanfracture spacing Rating	>2m 20	0.6-2m 15	200-600mm 10	60-200mm 8	<60mm 5
Fracture conditions Rating	Rough tight 30	Open<1mm 25	Weathered 20	Gouge<5mm 10	Gouge>5mm 0
Groundwater Rating	Dry 15	Damp 10	Wet 7	Dripping 4	Flowing 0
Fracture orientation Rating	v. favourable 0	favourable -2	fair -7	Un favourable -15	v.Un favourable -25
Rock mass rating (RMR) is sum of the six rating			Note that orientation rating are negative		

As per IS 12070, Table 2 Net Safe Bearing Pressures Based on RMR					
Amendment 01 - 2008					
Classification No.	I	II	III	IV	V
Description of Rock	Very Good	Good	Fair	Poor	Very Poor
RMR	100 - 81	80 - 61	60 - 41	40 - 21	20 - 0
qns, t/m2	600 - 448	440 - 228	280-141	135 - 48	45 - 30

DESIGN :-

- Calculations for both Safe Bearing Capacity (SBC) and Safe Bearing Pressure (SBP) are carried out considering shear parameters and consolidation characteristics of the sub strata.

3.15 SBC BASED ON SHEAR: -(IS: 8009 Part I)

- The ultimate net bearing capacity is evaluated after taking into consideration of shape factor and depth factor of the foundation in accordance with IS: 6403-1981. The net bearing capacity worked out using the following equation.

$$Q = C\, N_c S_c\, d_c i_c + q\,(N_q - 1)\, S_q d_q i_q + 0.5\, B\, \gamma\, N_r\, S_r d_r i_r W'$$

Where,

C = Cohesion **q** = Overburden Pressure

γ = Density **B =** Width of the Footing

N_c, N_q, N_r = Bearing capacity Factor

S_c, S_q, S_r = Shape Factor

d_c, d_q, d_r = Depth Factor

i_c, i_q, i_r = Inclination Factor

W = Water Table Factor

3.16 SAFE BEARING PRESSURE: - (IS: 8009 Part I)

- The total settlement is computed as summation of immediate and secondary settlement.

$$St = Si + Sc$$

Where,

Si is Immediate Settlement

$$Si = p\,B\,\frac{(1 - \pi^2)}{E}\,I$$

Where,

p = Foundation Pressure, kg/cm^2

B = Width of Footing,

m = Poisson's Ratio

I = Influence Factor

E = Modulus of Elasticity, kg/cm^2

Sc is Secondary Settlement

$$Sc = \frac{Ht}{(1+e_o)}\,Cc\,Log_{10}\frac{(po + \delta p)}{po}$$

Where,

Ht = Thickness of Soil Layer, m

Cc = Compression Index

e_o= Initial Void Ratio

po = Initial Effective Pressure

p = Increase in effective pressure

DESIGN OF PILE :-

Bored Cast In-Situ Pile design as per IS: 2911 (Part 1/Sec II)

For Non-Cohesive Soils (Clause No. 5.3.1.1 – Appendix B 1)

$Qu = Ap \times (0.5 \times D \times \gamma \times N\gamma + Pd \times Nq) + K \times PD \times \tan\delta \times As$

For Cohesive Soils (Clause No. 5.3.1.1 – Appendix B 2)

$Q_u = (A_p \times N_c \times C_p + \alpha \times C_s \times A_s)$

Where,

A_p = Cross-Sectional area of pile toe

D = Diameter of stem

γ = Effective unit weight of soil at pile toe

P_D = Effective Overburden Pressure at pile toe

N_q & N_c = Bearing capacity factors

K = Coefficient of earth pressure

P_D = Effective Overburden Pressure at around stem

δ = Angle of wall friction

A_s = Surface Area of Pile Stem

C_p = Average Cohesion around Pile Toe

α = Reduction Factor

Chemical Analysis

pH Value (IS: 2720, Part XXVI)

- Twenty gram of soil sample is mixed with 50ml of distilled water. Suspension is then stirred for few seconds and allowed the stand for one hour with occasional stirring. It is stirred again, immediately before testing. The PH meter is calibrated with standard buffers and PH of the soil suspension is measured.

Chloride Content

- Five to six drops of potassium chromate indicator is added to 10ml of filtrate to get yellow color and then titrated against silver nitrate solution (0.02N)

End Point: Yellow brick red color

Chloride content, (%) = 0.071 x V1 x V/(S xWd)

Where,

V1 = Volume of silver nitrate used during titration (ml)
S = Volume of filtrate taken for the test (ml)
Wd = Weight of dry soil taken for filtration (gm)
V = Volume of filtrate obtained from Wd (ml)

Sulphate Content

- 5 ml of sodium chloride – hydrochloric and mixture, 5 ml of Glycerol-Ethanol mixture and 0.075g of Barium chloride is added to 25ml of soil filtrate (Water sample is tested directly after adding the regents).

- This is stirred for about an hour and the absorbance is measured against distilled water blank using a colorimeter. The sulphate content of the sample is deducted from the standard curve. Water sample is tested directly.

GEOLOGICAL INFORMATION

The State of Assam is occupied by rocks belonging to, (a) Proterozoic Gneissic Complex, (b) Shillong Group of Meso-Palaeo Proterozoic age, (c) Granite Plutons of Neo-Proterozoic-Lower Palaeozoic age, (d) Lower Gondwana sedimentary rocks of Permo-carboniferous age (e) Alkali Complexes of Samchampi, Borpung and volcanic rocks represented by Sylhet Trap of Cretaceousage, (f) Lower Tertiary (Paleocene-Eocene) shelf sediments of the Jaintia Group extending along the southern and eastern flanks of Mikir Hills and geosynclinal sediments of Disang Group in parts of the North Cachar Hills, (g) Upper Tertiary (Oligocene to Pliocene) shelf and geosynclinal sediments covering the southern flanks of Mikir Hills, the North Cachar Hills and the hills of the Cachar district in the Surma valley area. These rocks are also exposed along the northern foothills of Naga-Patkai range bordering the southern margin of Sibsagar, Jorhat and Dibrugrah districts. Along the southern foothills of Eastern Himalaya facing the northern border of Assam a narrow strip of Siwalik rocks are exposed (h) the Quaternary deposits comprising of Older and Newer Alluvium occur in flood plains and terraces of the Brahmaputra valley, Surma valley and other river basins of Assam.

Geological structures generally act either as conduits or as barrier to flow of groundwater. Lineaments representing faults, fractures, shear zones etc. are the structural features that control the occurrence and movement of ground water in haxd rock terrain. The important geological structures reported are faults inferred to have cut across the valley fill of Quaternary alluvium. Some fractures show semi-circular pattern as in the Fatalist area.

SEISMIC HAZARDS

Seismic Hazard- refers to the study of expected earthquake ground motions at the earth's surface, and its likely effects on existing natural conditions and man-made structures for public safety considerations; the results of such studies are published as seismic hazard maps, which identify the relative motion of different areas on a local, regional or national basis.

With hazards thus determined, their risks are assessed and included in such areas as building codes for standard buildings, designing larger buildings and infrastructure projects, land use planning and determining insurance rates. The seismic hazard studies also may generate two standard measures of anticipated ground motion, both confusingly abbreviated MCE; the simpler probabilistic Maximum Considered Earthquake (or Event), used in standard building codes, and the more detailed and deterministic Maximum Credible Earthquake incorporated in the design of larger buildings and civil infrastructure like dams or bridges.

Both the occurrence of earthquakes in the past in and around India, the country is divided into five seismic zones.

- **Zone V:** Covers the areas liable to seismic intensity IX and above on Modified Mercalli Intensity Scale. This is the most severe seismic zone and is referred here as Very High Damage Risk Zone.
- **Zone IV:** Gives the area liable to MM VIII. This, zone is second in severity to zone V. This is referred here as High Damage Risk Zone.
- **Zone III:** The associated intensity is MM VII. This is termed here as Moderate Damage Risk Zone.
- **Zone II:** The probable intensity is MM VI. This zone is referred to as Low Damage Risk Zone.

- **Zone I:** Here the maximum intensity is estimated as MM V or less. This zone is termed here as Very Low Damage Risk Zone.

  Based on this zoning, about 60% of India's land area is under moderate seismic threat or more, i.e., under seismic zone III or above.

Largest Earthquake in Assam

12 June 1897 - Near Rangjoli, Assam, M8.0