INDRADHANUSH GAS GRID LIMITED

NORTH EAST GAS GRID PHASE-III OF IGGL

BID DOCUMENT
FOR
PROCUREMENT OF VALVES (4” & ABOVE)
UNDER
NORTH EAST GAS GRID PHASE-III OF IGGL.

OPEN DOMESTIC COMPETITIVE BIDDING (ODCB)

TENDER ID: VCS21000019

Tender No.: C221052-VCS-IGGL-TENDER-003-Rev-01

(VOLUME II OF II) - Rev-01

ENERGISING QUALITY

PREPARED AND ISSUED BY
VCS QUALITY SERVICES PVT. LTD.
Noida, India

ENERGISING QUALITY	**PROJECT NUMBER: C221052**	IGGL

MATERIAL REQUISITION FOR MAINLINE & STATION VALVES (4" & ABOVE: BALL, PLUG & GLOBE VALVE)			Total Sheets		21
Document No	C221052	00	PP	MR	2002

INDRADHANUSH GAS GRID LIMITED

NORTH EAST GAS GRID PHASE-III OF IGGL

D1	30.06.2022	Issued for Client Approval	AY	MC	HK
C1	04.06.2022	Issued for Client Review	AY	MC	HK
REV	**DATE**	**DESCRIPTION**	**PREP**	**CHKD**	**APPR**

CONTENT

1. PURPOSE 3

2. DEFINITION 3

3. DOCUMENT PRECEDENCE 3

4. SCOPE OF SUPPLY 4

5. NOTES 12

6. LIST OF ATTACHMENTS 20

1. PURPOSE

This document is for purchase of 4" & above valves (Ball, Plug & Globe) for North East Gas Grid Phase-III of IGGL. The Phase -III project is divided in two sections, Dimapur-Kohima - Imphal Pipeline Section (DIPL) & Siliguri- Gangtok Pipeline Section (SGPL).

For Construction purposes, DIPL section is further divided in two Parts i.e., PART-A & PART-B.

Construction purposes, SGPL section is further divided in three Parts i.e., PART-C, PART-D & PART-E

2. DEFINITION

Where used in this document, the following terms shall have the meanings indicated below, unless clearly indicated by the context to this order

PROJECT	North East Gas Grid Phase-III OF IGGL
OWNER	Indradhanush Gas Grid Limited (IGGL)
CONSULTANT	VCS Quality Services Private Limited (VCSQSPL) the party to act for and on behalf of OWNER for the EPMC Services.
MANUFACTURER	The party, which manufactures and supplies equipment and services to the OWNER or to Contractor
MR	Material Requisition

3. DOCUMENT PRECEDENCE

It shall be the responsibility of the MANUFACTURER/ VENDOR to inform the PURCHASER of any errors, ambiguities, inconsistencies, discrepancies or conflict of information that may be found to exist in any document, specification or drawing submitted by the PURCHASER.

In case of conflict, the order of precedence shall be as follows:

a. MR/PR and notes to MR

b. Data Sheets

c. Project Specifications

d. Basic Documents

e. Codes and Standards

f. Vendor Standards

As a general rule in the event of any discrepancy between technical matter and local laws/ regulations (and documents above listed) the most stringent shall be applied.

However, Owner/Consultant reserves the right to consider most stringent requirement among the document attached / referred.

MANUFACTURER/ VENDOR shall notify PURCHASER of any apparent conflicts between MR, specifications, related datasheets, any code and standards and any other specifications noted herein. (Resolution and/ or interpretation precedence shall be obtained from PURCHASER in writing before proceeding with the design/ manufacturer or completion of services).

4. SCOPE OF SUPPLY

The scope of supply includes Ball Valves, Plug Valve conforming to design standard API-6D & Globe Valve conforming to design standard BS-1873 and meeting other technical requirements as specified in bid document (i.e. as per MR, Data Sheets & Technical Specifications etc), getting approvals from Purchaser/ Consultant, procurement of raw material, manufacturing, assembly at shop, testing & inspection at manufacturer's works, packing & forwarding & transportation, unloading to Nagaland, Manipur, West Bengal & , Sikkim as per tender terms & conditions including supply of all pre commissioning & commissioning spares. The details of valves to be supplied are in Table below:

Sl. No.	DESCRIPTION	QTY	REMARKS
1.1	Ball Valves, Plug valves & Globe valve	As per Schedule of Quantities Clause 5.0 of this document	
1.2	Spare Parts and Special Tools		
	a). Start-up & commissioning spares	1 LOT	As per Vendor recommendation
	b). Two (2) years operating spare	1 LOT	As per Vendor recommendation
	c). Special tools / accessories for erection, operation and maintenance	1 LOT	As per Vendor recommendation
1.3	Painting and Coating	1 LOT	As per MR, Data sheet, Approved ITP & specification
1.4	Inspection and Testing	1 LOT	As per MR, Data sheet, Approved ITP & specification
1.5	Inspection and Test Plan	1 LOT	To be submitted by vendor
1.6	Test Certificate	1 LOT	As per MR, Data sheet, Approved ITP & specification

1.7	Vendor Documentation	1 LOT	As per MR, Data sheet, Approved ITP & specification
1.8	Marking, Packaging & Transportation	1 LOT	As per MR, Data sheet, Approved ITP & specification
1.9	Preparation for Shipment	1 LOT	As per MR & specification
1.10	Delivery Point	Delivery location shall be as defined in Clause 6.0 of this MR.	
1.11	Delivery Schedule	For all Item Nos: Five Months (05) on FOT Site Basis. Date of receipt & acceptance of material at site shall be considered as the date of delivery	

5. SCHEDULE OF QUANTITIES

5.1 BALL VALVES -MANUAL (SPLIT BODY DESIGN)

DIMAPUR - KOHIMA – IMPHAL(DIPL) AND SILIGURI-GANGTOK (SGPL) PIPELINE ROUTE									
Item. No.	**Size**	**Piping Class/ Rating**	**Bore**	**Ends**	**Data sheet Doc Number**	**Qty. (Nos)**	**Valve Tag No**	**Location /Body type**	**Remarks**
1	12″	D1A 600#	RB	FE	C221052-00-PP-DS-2002A	11	12″-BV-D1A-RB-2001	AG, Split Body Design, 8 Nos with Locking, 3 Nos without Locking	5 Nos DIPL 6 Nos SGPL
2	12″	D1A 600#	RB	BW	C221052-00-PP-DS-2002A	4	12″-BV-D1A-RB-2001	AG, Split Body Design,	2 Nos DIPL 2 Nos SGPL
3	8″	D1A 600#	RB	BW	C221052-00-PP-DS-2002A	2	8″-BV-D1A-RB-2002	AG , Split Body Design	1 Nos DIPL 1 Nos SGPL

DIMAPUR - KOHIMA – IMPHAL(DIPL) AND SILIGURI-GANGTOK (SGPL) PIPELINE ROUTE									
Item. No.	**Size**	**Piping Class/ Rating**	**Bore**	**Ends**	**Data sheet Doc Number**	**Qty. (Nos)**	**Valve Tag No**	**Location /Body type**	**Remarks**
4	4″	A1A 150#	FB	FE	C221052-00-PP-DS-2002B	09	4″-BV-A1A-FB-2001	AG, Split Body Design With Locking Arrangement	5 Nos DIPL 4 Nos SGPL
5	4″	D1A 600#	RB	FE	C221052-00-PP-DS-2002A	60	4″-BV-D1A-RB-2001	AG, Split Body Design. (16 Nos TSO)	31 Nos DIPL 29 Nos SGPL

5.2 BALL VALVES -MANUAL (FULLY WELDED BODY DESIGN)

DIMAPUR - KOHIMA – IMPHAL(DIPL) AND SILIGURI-GANGTOK (SGPL) PIPELINE ROUTE									
Item .No.	**Size**	**Piping Class/ Rating**	**Bore**	**Ends**	**Data sheet Doc Number**	**Qty. (Nos)**	**Valve Tag No**	**Location/ Body Type**	**Remarks**
6	8″	D1A 600#	RB	BW	C221052-00-PP-DS-2002A	21	8″-BV-D1A-RB-2002	AG , Fully welded Body Design	12 Nos DIPL 9 Nos SGPL
7	4″	D1A 600#	RB	BW	C221052-00-PP-DS-2002A	25	4″-BV-D1A-RB-2002	AG , Fully welded Body Design	13 Nos DIPL 12 Nos SGPL
8	4″	D1A 600#	RB	BW	C221052-00-PP-DS-2002A	36	4″-BV-D1A-RB-2003	UG, Stem Extension, Fully welded Body Design	20 Nos DIPL 16 Nos SGPL

5.3 BALL VALVES -ACTUATED (GOOV)-FULLY WELDED BODY DESIGN

DIMAPUR - KOHIMA – IMPHAL(DIPL) & SILIGURI-GANGTOK (SGPL) PIPELINE ROUTE									
Item. No.	Size	Piping Class/ Rating	Bore	Ends	Data sheet Doc Number	Qty. (Nos)	Valve Tag No	Location/ Body Type	Remarks
9	12″	ML 600#	FB	BW	C221052-00-PP-DS-2002C	08	GOOV 3402, GOOV 4601, GOOV 4101, GOOV 4103	Above Ground, Fully welded Body Design	4 Nos DIPL
							GOOV 1002, GOOV 2001, GOOV 1601, GOOV 1602		4 Nos SGPL
10	12″	ML 600#	FB	BW	C221052-00-PP-DS-2002D	18	GOOV-3501,3601,3701, 3801,3901,4001, 4201,4301,4401, 4501	UG, Stem Extension, Fully welded Body Design	10 Nos DIPL
							GOOV-1101,1201,1301, 1401,1501,1701, 1801,1901,		8 Nos SGPL
11	12″	D1A 600#	RB	BW	C221052-00-PP-DS-2002C	08	GOOV 3401, GOOV 4602, GOOV 4102, GOOV 4104	Above Ground, Fully welded Body Design	4 Nos DIPL
							GOOV 1001, GOOV 2002, GOOV 1603, GOOV 1604		4 Nos SGPL

5.4 PLUG VALVES

DIMAPUR - KOHIMA – IMPHAL(DIPL) & SILIGURI-GANGTOK (SGPL) PIPELINE ROUTE									
Item .No.	Size	Piping Class/ Rating	Bore	Ends	Data sheet Doc Number	Qty. (Nos)	Valve Tag No	Location	Remarks
12	4″	D1A 600#	-	FE	C221052-00-PP-DS-2002E	9	4″-PV-D1A-2004	Above Ground,	5 Nos DIPL
									4 Nos SGPL

DIMAPUR - KOHIMA – IMPHAL(DIPL) & SILIGURI-GANGTOK (SGPL) PIPELINE ROUTE									
Item .No.	**Size**	**Piping Class/ Rating**	**Bore**	**Ends**	**Data sheet Doc Number**	**Qty. (Nos)**	**Valve Tag No**	**Location**	**Remarks**
13	4″	D1A 600#	-	BW	C221052-00-PP-DS-2002E	9	4″-PV-D1A-2004	Above Ground,	5 Nos DIPL 4 Nos SGPL

5.5 GLOBE VALVES

DIMAPUR - KOHIMA – IMPHAL(DIPL) & SILIGURI-GANGTOK (SGPL) PIPELINE ROUTE									
Item. No.	**Size**	**Piping Class/ Rating**	**Bore**	**Ends**	**Data sheet Doc Number**	**Qty. (Nos)**	**Valve Tag No**	**Location**	**Remarks**
14	4″	D1A 600#	-	BW	C221052-00-PP-DS-2002F	18	4″-GV-D1A-2005	UG (Extended Stem)	10 Nos DIPL 8 Nos SGPL
15	4″	D1A 600#	-	FE	C221052-00-PP-DS-2002F	44	4″-GV-D1A-2006	A/G	23 Nos DIPL 21 Nos SGPL

LEGENDS:

BW: Butt Welded, FE: Flange End

CS: Carbon Steel,

AG: Above Ground UG: Under Ground

FB: Full Bore RB: Reduce Bore

BV : Ball Valve PV : Plug valve.

GV : Globe Valve GOOV: Gas Over Oil Actuated Valve

D1A: 600# Carbon Steel Piping Class , A1A: 150# Carbon Steel Piping Class

6. DELIVERY LOCATION

MR ITEM SR NO	SIZE (Inch)	VALVE DESCRIPTION	PART-A (DIPL)	PART-B (DIPL)	PART-C (SGPL)	PART-D (SGPL)	PART-E (SGPL)	TOTAL (Nos)	REMARKS
		DELIVERY STATE	NAGALAND	MANIPUR	WEST BENGAL	WEST BENGAL	SIKKIM		
1	12”	Ball Valve, D1A 600#, RB, FE, A/G, Split Body Design,	2	3	3	3	-	11	5 Nos DIPL & 6 Nos SGPL
2	12”	Ball Valve, D1A 600#, RB, BW, A/G, Split Body Design,	1	1	1	-	1	4	2 Nos DIPL & 2 Nos SGPL
3	8”	Ball Valve, D1A 600#, RB, BW, A/G, Split Body Design,	-	1	-	-	1	2	1 Nos DIPL & 1 Nos SGPL
4	4”	Ball Valve, A1A 150#, FB, FE, A/G, Split Body Design, With Locking Arrangement	2	3	1	2	1	9	5 Nos DIPL & 4 Nos SGPL
5	4”	Ball Valve, D1A 600#, RB, FE, A/G, Split Body Design,	12	19	8	14	7	60	31 Nos DIPL & 29 Nos SGPL

MR ITEM SR NO	SIZE (Inch)	VALVE DESCRIPTION	PART-A (DIPL)	PART-B (DIPL)	PART-C (SGPL)	PART-D (SGPL)	PART-E (SGPL)	TOTAL (Nos)	REMARKS
		DELIVERY STATE	NAGALAND	MANIPUR	WEST BENGAL	WEST BENGAL	SIKKIM		
6	8″	Ball Valve, D1A 600#, RB, BW, A/G , Fully welded Body Design	7	5	3	4	2	21	12 Nos DIPL & 9 Nos SGPL
7	4″	Ball Valve, D1A 600#, RB, BW, A/G , Fully welded Body Design	4	9	3	6	3	25	13 Nos DIPL & 12 Nos SGPL
8	4″	Ball Valve, D1A 600#, RB, BW, U/G, Stem Extension, Fully welded Body Design	12	8	6	6	4	36	20 Nos DIPL & 16 Nos SGPL
9	12″	Ball Valve, ML 600#, FB, BW, Above Ground, Fully welded Body Design, GOOV valves	1	3	1	2	1	8	4 Nos DIPL & 4 Nos SGPL
10	12″	Ball Valve, ML 600#, FB, BW, Under Ground, Extended Stem, fully welded Body Design, GOOV.	6	4	3	3	2	18	10 Nos DIPL & 8 Nos SGPL

MR ITEM SR NO	SIZE (Inch)	VALVE DESCRIPTION	PART-A (DIPL)	PART-B (DIPL)	PART-C (SGPL)	PART-D (SGPL)	PART-E (SGPL)	TOTAL (Nos)	REMARKS
		DELIVERY STATE	NAGALAND	MANIPUR	WEST BENGAL	WEST BENGAL	SIKKIM		
11	12"	Ball Valve, D1A, 600#, RB, BW, Above Ground, fully welded Body Design, GOOV	1	3	1	2	1	8	4 Nos DIPL & 4 Nos SGPL
12	4"	Plug Valve, D1A 600#, FE, Above Ground	2	3	1	2	1	9	5 Nos DIPL & 4 Nos SGPL
13	4"	Plug Valve, D1A 600#, BW, Above Ground	2	3	1	2	1	9	5 Nos DIPL & 4 Nos SGPL
14	4"	Globe Valve, D1A 600#, BW, UG (Extended Stem)	6	4	3	3	2	18	10 Nos DIPL & 8 Nos SGPL
15	4"	Globe Valve, D1A 600#, FE, Above Ground,	10	13	6	9	6	44	23 Nos DIPL & 21 Nos SGPL

7. NOTES:

1. All valves (including all components) shall be designed and suitable for Natural Gas.
2. Design Data for the Project:
   - Pipeline Service : Natural Gas
   - Design Pressure : 92 kg/ cm² for 600#
   - Max Design Temp (Above Ground) : 65°C
   - Min Design Temp : (-) 29°C for CS
3. Vendor shall check/ review Valve body calculation based on design conditions and manufacturing requirements and submit necessary to company for approval.
4. Vendor shall Design Valve body and other pressure containing parts as per ASME Sec VIII Div-1. However the minimum wall thickness shall not be less than the minimum requirement of ASME B16.34.
5. The bore of full bore butt-welded & flanged valve shall be in line with Connecting pipe, however in any case it shall not be less than minimum required shown in Client Ball Valve specification, Data sheet & API 6D.
6. All Valves shall be fire safe design.
7. Ball Valve & Plug Valve shall be designed as per API 6D and Globe Valve shall be designed as per BS 1873
8. Bidder shall submit torque table along with the bid for actuated valves.
9. For the entire Valves Charpy V-notch test shall be conducted for each heat treatment lot and for each heat of steel used. Charpy V-notch test shall be conducted at (-) 29°C for CS & at (-) 45°C for LTCS with the impact test provisions of ASTM A 370. Results of Charpy V-notch test shall be recorded.
10. Certification shall be EN 10204 type 3.2.
11. Vendors to note that for minimum inspection and testing requirement of the valves shall be governed by attached ITP with this MR. However, vendor shall submit their ITP for approval covering the requirement specified in attached QAP. same shall be finalized during ITP approval stage after award.
12. Painting for above ground valves shall be as per painting specification VPC-SS-PP-2502 for coastal & marine Environment and underground valve shall be painted with 100% Solid high build epoxy (Powercrete R-95) with a minimum dry film thickness of 1000 microns or 1.5 mm thick polyurethane coating.

13. Design of weld end valves shall be such that during field welding operations, the soft seals or plastic components of the valve (wherever used) is not liable to be damaged. Valve manufacturer shall provide recommendation for field welding operations.

14. The quantities indicated above are indicative and are subject to variation up to ± 25 % (minimum of one number, any fraction shall be taken as next whole number). The price quoted for the items shall remain valid for any change in quantity within such variation.

15. **DOCUMENTS & DATA REQUIREMENTS**

15.1 The table here under specifies the quantities and the nature of the documents to be submitted by the Package Contractor to Purchaser.

15.2 The documents required at the inquiry stage and to be included in the bid are listed under column A.

15.3 The documents required after award of the Contract and subject to the written approval of the Purchaser are listed under column B

15.4 The final and certified documents are listed under column C

15.5 Any document, even when preliminary, shall be binding and therefore duly identified and signed by the Vendor. It shall bear the Purchaser's Project reference, the Material Requisition number and the identification number.

15.6 The drawings/documents shall be reviewed, checked, approved and duly signed/stamped by successful Bidder/supplier before submission. Revision number shall be changed during submission of the revised successful Bidder/supplier documents and all revisions shall be highlighted by clouds. Whenever the successful Bidder/supplier require any sub-supplier drawings to be reviewed by IGGL/VCS, the same shall be submitted by the supplier after duly reviewed, approved and stamped by the successful Bidder/supplier. Direct submission of the sub-supplier's drawings without contractor's approval shall not be entertained

15.7 Review/Approval of the successful Bidder/supplier drawings by IGGL/VCS would be only to review the compatibility with basic designs and concepts and in no way absolve the successful Bidder/supplier of his responsibility/contractual obligation to comply with tender requirements, applicable codes, specifications and statutory rules/regulations. Any error/deficiency noticed during any stage of manufacturing/execution/installation shall be promptly corrected by the successful Bidder/supplier without any extra cost or time, whether or not comments on the same were received from IGGL/VCS during the drawing review stage.

15.8 The successful Bidder/ Supplier shall submit a prerecorded Training CDs/DVDs and it shall comprise the basic theories and fundamentals, related standards, design parameters, scanned copies of approved drgs./docs., manufacturing & inspection methods, operating & maintenance instructions and other relevant details. The CDs/DVDs shall have to be self-contained, user-friendly using animation/videos and other multimedia techniques.

15.9 **THE DOCUMENTS ARE FULLY PART OF THE SUPPLY WHICH SHALL BE COMPLETE ONLY IF AND WHEN THE DOCUMENTS COMPLYING FULLY WITH THE TENDER REQUIREMENTS ARE RECEIVED BY THE PURCHASER.**

Sr No	Documents & Data	A	B		C	
		No. of Copies	No. of Copies	Required Date (from FOI)	No. of Copies	Required Date (Before Dispatch)
1.	Completed Data Sheets	3	3	2 Weeks	3	2 Weeks (with final technical file)
2.	Drawing / Data Submittal list / schedule	-	3	2 Weeks + monthly	3	2 Weeks
3.	Fabrication, test and delivery schedule (per item)	3	3	2 Weeks + monthly	3	2 Weeks
4.	Fire Safe certificate as per API 6FA & API 607	3	-	-	-	-
5.	Progress Report	-	3	2 Weeks + monthly	3	2 Weeks
6.	Catalogues / References	3	-	-	3	With final technical file
7.	GA drawings + Sectional drawings + Material specification + Unit weight. + Unit volume + Package dimensions per unit (all above per valve and actuator)	3	3	2 Weeks	3	With final technical file
8.	"Way of Shipping" as per Notes to Material Requisition	-	3	7 days	-	-

9.	Packing / shipping list with weights and dimensions	-	3	2 Weeks before shipping	3	2 Weeks (with final technical file)
10.	Design calculations for pressure containing parts	-	3	2 Weeks	3	2 Weeks (with final technical file)
11.	Welding details for the pups	-	3	2 Weeks	3	2 Weeks (with final technical file)
12.	Torque curves + Torque calculations	3	3	2 Weeks	3	2 Weeks (with final technical file)
13.	Bill of materials (on drawings)	-	3	2 Weeks	3	2 Weeks (with final technical file)
14.	Recommended spare parts list (for erection and commissioning)	3	-	-	3	2 Weeks (with final technical file)
15.	Recommended spares parts list (for 2 years operation)	3	-	-	3	2 Weeks (with final technical file)
16.	Welding procedure specification and records WPS / PQR	-	3	2 Weeks	3	2 Weeks (with final technical file)
17.	QA / QC program	3	3	2 Weeks	3	2 Weeks (with final technical
18.	Inspection and Test Procedures along with Quality Assurance Plan	3	3	2 Weeks	3	2 Weeks (with final technical file)
19.	Test Reports	-	-	-	3	2 Weeks (with final technical
20.	NDE / NDT Reports	-	-	-	3	2 Weeks (with final technical
21.	Heat Treatment Reports	-	-	-	3	2 Weeks (with final technical
22.	Hydrotest and air test report	-	-	-	3	2 Weeks (with final technical file)
23.	Maintenance and operating manuals	-	-	-	3	2 Weeks (with final technical file)
24.	Installation instructions & Site inspection procedure	-	-	-	3	2 Weeks (with final technical file)
25.	Material certificate as per EN 10204 - 3.2	-	-	-	3	2 Weeks (with final technical file)
26.	Painting system description & procedure	3	3	2 weeks	3	2 Weeks (with final technical file)

27.	List of sub-vendors with their scope	3	3	2 weeks		
28.	Training CDs/DVDs covering design, operation & maintenance	-	-	-	3	2 Weeks (with final technical file)
29.	Final technical file, preliminary copy for approval (in soft & hardcopy)	-	3	2 weeks before dispatch/ shipping	-	-
30.	Final technical file (hardcopy)	-	-	-	3	Before shipping
31.	Final technical file (softcopy – .pdf - Acrobat files in CD ROM / DVD)	-	-	-	6	

Notes for above table:

a) In case of e-bids, only single copy of documents / drawings / data under column A need be uploaded.

b) Durations in column B (required date) are weeks after FOI or as indicated in Table.

c) Durations in column C (required date) are weeks after document approval or as indicated in Table. Due date of each document may be proposed.

d) The above documents & data requirements shall also be supplemented by all Documentation requirements Mentioned (if any) in Specification.

e) For documents & data requirements of valve actuators refer Technical specification for valve actuators shall be refer.

16. The Vendor shall be completely responsible for the design, materials, manufacture & fabrication, testing, inspection, preparation for shipment and transport of the above equipment strictly in accordance with the MR and all attachments thereto. Minimum all pressure containing and pressure controlling parts of Valves and Actuators shall be provided with EN 10204-3.2 certificates.

17. Vendor scope of work includes the equipment with all internals and accessories shown on the datasheets, specifications and all unmentioned parts necessary for a satisfactory operation and testing, except those which are indicated to be out of the vendor's supply.

18. Inspection shall be in accordance with EN 10204 3.2 certification shall be issued for each dispatched valve. Vendor shall appoint anyone of the TPIA for inspection purpose. Vendor has to intimate the TPIA name from below listed agencies to IGGL/VCS prior to perform any inspection activity

Apart from inspection by TPIA, Inspection shall also be performed by IGGL and or its authorized representative / VCS and or its authorized inspection agency (AIA), as set out and specified in the codes and particular documents forming this MR.

Bidder shall provide one / two office along with furniture for IGGL and VCS/ TPIA personnel for entire duration of the manufacturing. AC Office shall have table/ Chair/internet connectivity/stationary/courier and printing facilities for inspection officers for round the clock inspection during manufacturing.

19. Bidder shall list & quote spares for 2-year normal operation.

20. Bidder to include the startup and commissioning spares for valves and actuators (as applicable) in the quoted price for Valves. However, list of spares (start up and commissioning) to be made available without prices as per attached formats. In case no startup/commissioning spares are recommended by the bidder but the same are required at the time of startup/commissioning, Bidder shall supply such spares free of cost.

21. Vendor to indicate in his offer the gross weight (in kg or Metric Tonne) per unit, volume (in m3) per unit and dimensions (L x B x H) of package (wooden box, etc.) to accommodate unit quantity or number of quantities (as applicable).

22. Vendor shall establish the equivalence/superiority of any material proposed (With justification of material properties and availability) other than that specified in Datasheet.

23. Bidders to note that all the documents/drawings submitted by them as a part of bid shall be considered only to assess Bidder's technical capability and shall in no way absolve them from complying with all the requirements of the Tender. All items to be supplied by the Bidder shall be strictly in accordance with tender requirements.

24. Bidder/supplier shall submit hard copies of all documents/ drawings to VCS/IGGL, as listed in columns B & C of table for document and data requirement under Clause/note 15.9 of MR and also in all technical specifications. The date of receipt of these documents/ drawings at VCS/IGGL shall be deemed as the date of submission. If any documents/ drawings require re-submission due to any error/ deficiency noticed during review/ approval stage, in that event the additional time required by the bidder/supplier to get the revised document/ drawing reviewed/approved by VCS/IGGL shall be solely to bidder's/supplier's account and in no case the bidder/ supplier shall be entitled for any time or cost benefit.

25. Bidders to note that the valves supplied by them shall be capable to withstand the field hydro test pressure (i.e. 1.5 times of design pressure) for 6 to 24 hours test holding duration under field / site conditions. The valve's ball shall be kept in either partial or full open condition for entire test duration and test medium will

be non-corrosive water. The vendor shall be liable for repair/ replacement of valve if found faulty during site hydro test at his risk & cost. All cost for associated activities like packaging, transportation etc. in connection to repair / replacement of valve shall be borne by the bidder. No claim shall be entertained by the Owner / Purchaser in this regard.

26. Vendors to note that packing & transportation of the valves shall be done strictly as per attached technical specification for handling and transportation.

27. Bidders to note that for all the actuated valves in this MR, successful bidder shall have to arrange for one site visit for Valve/ Actuator to address site related issues, if arise during installation/ commissioning. The price for the same have to be built-in quoted prices for such valves. Further, The scope of visit shall be to cover all sites, inclusive of Airfare Boarding, Lodging, Local Transport, Incidental, Traveling etc. & all other expenses, where such valves are installed/ being installed. This requirement is in addition to the provisions of Defect Liability Period (DLP).

28. Vendors to note that the entire ordered quantity shall be offered for IGGL/VCS inspection as per following table. In case no. of visits of IGGL/VCS engineer become more than as specified in table below for complete order quantity, vendor shall bear the touring expenditure of IGGL/ VCS engineers as per company rules. IGGL/VCS reserves the right to waive off this requirement in case of project exigencies.

Sr No	Size Range	Minimum Quantity for one lot
1	8” to 14”	Upto 20 valves
2	¾” to 6”	Upto 200 valves

29. In case of any multiple of the ordered quantity the no. of valves shall be divided by quantity specified for one lot in above mentioned table to arrive at the no. of lots. No. of lots shall be determined by rounding off to next integer.

30. Vendors to note that TPI inspection is either to be conducted before IGGL/ VCS inspection or in parallel. In no case TPI inspection shall be permitted after IGGL/ VCS inspection. For the valves where IGGL/ VCS inspection extent is 100% witness, TPI inspection maybe allowed in parallel with IGGL/ VCS. However, for valves requiring 10% IGGL/ VCS witness inspection, vendor has to finish TPI inspection before raising call and upload TPI inspection report in Inspection Management System of IGGL/ VCS.

31. Extent of IGGL/ VCS witness during final inspection shall be as follows:

Sr No	Size	Class	IGGL/ VCS Inspection extent
1	2” to 8”	150	10% random witness and document review for 100% valves.
2	10” and more	150	100% witness.
3	2” to 6”	300 and higher	10% random witness and document review for 100% valves.
4	8” and more	300 and higher	100% witness.
5	Below 2”	All classes	10% random witness and document review for 100% valves.

32. **Strip Test**: Vendor need to demonstrate strip test of bolted body Ball valves. For this test one valve of each ordered size and rating shall be selected at random after successful hydro and pneumatic tests by TPI & IGGL/VCS inspector. The valve shall be dismantled completely. Alloy steel parts shall be checked for compliance to relevant material code using Positive material identification technique. Selected valve(s) shall then be reassembled after replacing sacrificial parts like gasket & O-rings and complete final inspection as per approved ITP shall be carried out once again to ensure the repeatability of body seals and seats.

33. Valves shall be delivered at locations specified in tender documents. All transportation, handling, delivery shall be in bidder’s scope.

34. Bidder shall furnish quotation only in case he can supply material strictly as per this MR and specification/ data sheets forming part of MR.

35. The submission of prices by the bidder shall be construed to mean that he has confirmed compliance with all technical specifications of the corresponding item(s).

36. If the offer contains any technical deviations or clarifications or stipulates any technical specifications (even if in line with MR requirements) and does not include complete scope & Technical/ Performance Data required to be submitted with the offer, the offer shall be liable for rejection.

37. Bidder must submit all documents/ drawings/ calculations as specified in relevant specification along with his offer and after award of order.

38. Purchaser's inspector reserves the right to perform stage wise inspection and witness tests, as indicated in specification for valves at manufacture's works prior to shipment. Manufacturer shall give reasonable notice of time and shall provide without charge reasonable access and facilities require for inspection to the purchaser's inspector. Inspection and tests performed/witnessed by purchaser's inspector shall in no way relieve the manufacturer's obligation to perform the required inspection and test.

39. **Bidder to submit followings documents along with his offer/Bid.**

    a. Bidder must submit Signed & stamped copy of whole technical tender (MR, Specification, data sheet, SOR, ITP etc.) as token of having read, understood and totally accepted all the terms and conditions.
    b. Duly filled up, Signed & stamped Compliance Statement as per attached format.
    c. Duly filled up, Signed & stamped Check List as per attached format.
    d. Duly filled up, Signed & stamped No-deviation sheet as per attached format.

8. LIST OF ATTACHMENTS

1. Data Sheet - Ball Valves; C201052-00-PP-DS-(2002A to 2002D)
2. Data Sheet - Plug Valve; C201026-00-PP-DS-(2002E)
3. Data Sheet - Globe Valves; C201052-00-PP-DS-(2002F)
4. Data Sheet for Actuator (ON-OFF VALVES) C201026-00-IN-DS-5002
5. Process Data Sheet for On-Off Valves (C221052-DIPL-PC-DS-1001 & C221052-SGPL-PC-DS-1001
6. Standard Specification for Pipeline Ball Valves; VPC-SS-PP-2004
7. Standard Specification for Plug Valves; VCS-SS-PP-2051
8. Standard Specification for Assorted Valves; VPC-SS-PP-2504
9. Standard Specification for GOOV VCS-SPC-5205
10. Standard Specifications for Painting; VPC-SS-PP-2502
11. Inspection and Test Plan – Ball Valve; VCS-ITP-PP-2007
12. Inspection and Test Plan – Check & Globe Valves; VCS-ITP-PP-2008
13. Inspection and Test Plan – Plug Valves; VCS-ITP-PP-2009
14. Inspection and Test Plan – Actuator; C221052-00-IN-ITP-5004
15. Piping Material Specification; Doc. No. C221052-00-PP-PMS-2001
16. P&IDS
17. Std Specification for quality Management System From vendor VPC- SS- PP- 2044
18. Std Specification for Document requirement from suppliers VPC- SS- PP- 2043

19. Checklist – Technical
20. Compliance Statement
21. Deviation Sheet
22. Drawings and Documents
23. Instruction to Bidder
24. List of Spares
25. Reference List
26. Recommended Third Party Inspection Agency (TPIA)

ENERGISING QUALITY	CLIENT : INDRADHANUSH GAS GRID LIMITED	JOB NO : C221052
IGGL	PROJECT : NORTH EAST GAS GRID PHASE-III OF IGGL	DOC. NO.: C221052-00-PP-DS-2002A
	DATA SHEET OF FE/BW, ABOVEGROUND/UNDERGROUND, MANUAL BALL VALVE DN 100 TO DN 300 (NPS 4" to NPS 12") Rating 600#, D1A, SPLIT /WELDED BODY DESIGN	No. of Pages : 02 — Revision: C1 (26.05.2022), D1 (30.06.2022)

Location		NAGALAND, MANIPUR, WEST BENGAL, SIKKIM - INDIA	MR No.	C221052-00-PP-MR-2002A
SR.NO		C221052-DIPL-PC-PID-1001 TO 1013 & C221052-SGPL-PC-PID-1001 TO 1011	P.O No.	#
1	GENERAL	Valve Manufacturer		
2	GENERAL	Tag Numbers / Material Requisition Item No.	Refer Material Requistion (MR) Item No: 1, 2, 3 & 5 - (Split Body Design) Refer Material Requistion (MR) Item No: 6, 7, 8 - (Fully Welded Body Design)	
3	GENERAL	Company's Specification No.	VPC-SS-PP-2004	
4	GENERAL	Category	-	
5	GENERAL	Pipeline Line No	Not Required	
6	GENERAL	Class	D1A, 600#	
7	DESIGN AND TEST REQUIREMENTS	Size	DN 100 (NPS 4") to DN 300 (NPS 12")	
8	DESIGN AND TEST REQUIREMENTS	Type of Valve	Trunion Mounted, Double Block and Bleed, Antistatic, Vent Drain/ Flush Connection with Anti Blowout Stem, Split Body Design or Fully Welded Body Design as specified in MR	
9	DESIGN AND TEST REQUIREMENTS	Type of Port (Full / Reduced)	Refer Material Requistion (Doc. No- C221052-00-PP-MR-2002)	
10	DESIGN AND TEST REQUIREMENTS	Design Temperature (º C) — Maximum	65	
11	DESIGN AND TEST REQUIREMENTS	Design Temperature (º C) — Minimum	-29	
12	DESIGN AND TEST REQUIREMENTS	Corrosion Allowance (mm)	1.5	
13	DESIGN AND TEST REQUIREMENTS	Installation (Aboveground/Underground)	Refer Material Requistion (MR)	
14	DESIGN AND TEST REQUIREMENTS	Service	Natural Gas (NG)	
15	DESIGN AND TEST REQUIREMENTS	End Connection	Refer Material Requistion (Doc. No- C221052-00-PP-MR-2002)	
16	DESIGN AND TEST REQUIREMENTS	Flange Face Finish	RF/125AARH for Flanged Ends (As applicable)	
17	DESIGN AND TEST REQUIREMENTS	Design Standards	API 6D	
18	DESIGN AND TEST REQUIREMENTS	End Connection Standard	ANSI B16.5 for Flanged Ends (As applicable)/ ANSI 16.25 for Butt Welded Ends (As applicable)	
19	DESIGN AND TEST REQUIREMENTS	ASME Class	600#	
20	DESIGN AND TEST REQUIREMENTS	Stem Extension Requirement	Required for Under Ground Valves (Refer Material Requistion for AG or UG)	
21	DESIGN AND TEST REQUIREMENTS	Length of Stem Extension	For UG underground valves (Refer MR) , 2.5-3.0 meter from Centerline of pipe (Refer Note-20).	
22	DESIGN AND TEST REQUIREMENTS	Orientation of Stem	Perpendicular to Valve axis	
23	DESIGN AND TEST REQUIREMENTS	Type of Valve Operator	DN ≤ 100 mm (4") - Wrench / Lever - Pull Force 350N max. DN ≥ 150 mm (6") - Gear Operated	
24	DESIGN AND TEST REQUIREMENTS	Valve Actuator Operating Time	Not Applicable	
25	DESIGN AND TEST REQUIREMENTS	Requirement of Locking Mechanism (LO / LC)	Refer Material Requistion (Doc. No- C221052-00-PP-MR-2002)	
26	DESIGN AND TEST REQUIREMENTS	Length of Pup Piece / Nipple (mm), (If Required) (Note-16) (Integrally welded to the BW valve on each side)	Required for Welded End Valves, as per Ball Valve Specification	
27	DESIGN AND TEST REQUIREMENTS	Pup Piece Size / Material Grade / Schdeule/ Thickness (Note-16)	As per Piping Material Specification	
28	DESIGN AND TEST REQUIREMENTS	Operator Specification No.	Not Applicable	
29	DESIGN AND TEST REQUIREMENTS	Valve Design Pressure (barg)	90.22	
30	DESIGN AND TEST REQUIREMENTS	Hydrostatic Test Pressure (barg) & Time	Body :135.33 barg & Test Duration as per API 6D	Seat : 99.24 barg & Test Duration as per API 6D
31	DESIGN AND TEST REQUIREMENTS	Pneumatic Test Pressure (barg) & Time	7.0 barg & Test Duration as per API 6D	
32	DESIGN AND TEST REQUIREMENTS	Charpy Impact Test (º C)	Yes (at -29 °C)	
33	DESIGN AND TEST REQUIREMENTS	Fire Safe Design (Note-24)	API 6FA / ISO10497	
34	DESIGN AND TEST REQUIREMENTS	Anti Static Testing Requirement	As per API 6D Latest Edition	
35	DESIGN AND TEST REQUIREMENTS	Hardness Test	248 HV10 max	
36	DESIGN AND TEST REQUIREMENTS	Painting (Note-21)	As per specification (Suitable for Industrial Corrosive Environment) Note-21	
37	DESIGN AND TEST REQUIREMENTS	Operator Data Sheet No.	Not Applicable	
38	PROCESS DATA (Applicable for Actuator)	Flow (Min/Nor/Max) (m^3/hr)	Not Applicable	
39	PROCESS DATA (Applicable for Actuator)	Pressure (Min/Nor/Max) (barg)	Not Applicable	
40	PROCESS DATA (Applicable for Actuator)	Temperature (Min/Nor/Max) (º C)	Not Applicable	
41	PROCESS DATA (Applicable for Actuator)	Max Shutoff DP (barg)	Not Applicable	
42	PROCESS DATA (Applicable for Actuator)	Viscosity (cP)	Not Applicable	
43	PROCESS DATA (Applicable for Actuator)	Density (Kg/m^3)	Not Applicable	
44	PROCESS DATA (Applicable for Actuator)	Mol . Wt	Not Applicable	
45	PROCESS DATA (Applicable for Actuator)	Sp Heat Ratio (Cp/Cv)	Not Applicable	
46	PROCESS DATA (Applicable for Actuator)	Compressibility (Z)	Not Applicable	
47	PROCESS DATA (Applicable for Actuator)	Ambient Temperature	Not Applicable	
48	CONNECTING PIPE DETAIL	Outside Diameter (Inch)	Size 4" to 12"	
49	CONNECTING PIPE DETAIL	Thickness (mm) / Schedule	As per Piping Material Specification	
50	CONNECTING PIPE DETAIL	Pipe Material	As per Piping Material Specification	
51	CONNECTING PIPE DETAIL	Design Code	ASME B31.8	
52	CONNECTING PIPE DETAIL	ASME Rating	600#	
53	CONNECTING PIPE DETAIL	Piping Class	D1A, 600#	
54	CONNECTING PIPE DETAIL	Orientation of Pipe	Suitable for all orientation	

ENERGISING QUALITY / IGGL	CLIENT : INDRADHANUSH GAS GRID LIMITED	JOB NO : C221052
	PROJECT : NORTH EAST GAS GRID PHASE-III OF IGGL	DOC. NO.: C221052-00-PP-DS-2002A
	DATA SHEET OF FE/BW, ABOVEGROUND/UNDERGROUND, MANUAL BALL VALVE DN 100 TO DN 300 (NPS 4" to NPS 12") Rating 600#, D1A, SPLIT /WELDED BODY DESIGN	No. of Pages : 02 — Revision: C1 (26.05.2022), D1 (30.06.2022)

Location	NAGALAND, MANIPUR, WEST BENGAL, SIKKIM - INDIA	MR No.	C221052-00-PP-MR-2002A
SR.NO	C221052-DIPL-PC-PID-1001 TO 1013 & C221052-SGPL-PC-PID-1001 TO 1011	P.O No.	#

		Part Description	Material Specified	Material Offered (By Bidder)
55	VALVE MATERIAL			
56		Body	ASTM A216 GR. WCC/ASTM 105	
57		Ball (Single Piece, Solid Construction)	SS-304 / SS-316 (Solid) OR (ASTM A105/ ASTM A216 Gr. WCC) + 75 micron ENP	
58		Seat Rings (No Casting)	(AISI 4140 +75 micron ENP)/ AISI 410/ SS 304/ SS 316	
59		Seat Seal	Primary Devlon V/ PEEK/ Viton with Secondary Metal to Metal	
60		Stem (No Casting)	(AISI 4140 +75 micron ENP)/ AISI 410 / SS 304 / SS 316	
61		Trunion	ASTM A216 GR. WCC/ASTM 105	
62		Stem Seal	VITON/ PTFE	
63		Body Seal	VITON/ PTFE	
64		Gland	13% Cr. Steel/ SS 316 / SS 304	
65		Stud Bolts/Nut	ASTM A 193 Gr. B7/ ASTM A 194 Gr. 2H	
66		Handle / Lever / Hand Wheel	Carbon Steel	

67	DATA TO BE PROVIDE BY VENDOR (if Applicable)	Valve Model No.		*
68		Flow Coefficient, Kv (Cubic Meters per Hour)		*
69		Valve Cavity Volume(CC)	Open position	*
70			Closed position	*
71		Operator Manufacturer / Model No.		*
72		Break-away Torque Under Max. Diff Pressure(Nm)		*
73		Running Torque (Open - Close/Close - Open) (Nm)		*

74	NOTES	**NOTES:**
75		1. Bidder to submit Soft Seal details and type, grade & class selected with manufacturer's recommendation like Pressure-Temperature Curve/Table for not to damage the soft seal during welding of valve ends at site.
76		2. This Data Sheet shall be read in conjunction with Piping Material Specification, valve Specification & other Tender Documents.
77		3. Dimension / Input Data as & where marked " * " shall be supplied by Vendor.
78		4. Manufacturer shall have valid API 6D license to use API monogram.
79		5. Valve design shall ensure repair of stem seals / packing under full line pressure.
80		6. 100.0 % Valve castings shall undergo Radiographic Examination.
81		7. Valves shall have support foot & lifting lugs as per valve Specification.
82		8. Valve design shall ensure repair of stem seals / packing under full line pressure.
83		9. Wrench operated valves shall be supplied with wrench.
84		10. The Charpy Impact temperature shall be -29°C as specified in data sheet and it shall superceded the Specification (VPC-SS-PP-2004) requirement at 0°C
85		11. A supplementary air seat test as per API 6D (Annex I, Para I.9 Type II) shall be carried out for all valves. A bubble tight seal is required without the use of any sealant. No leakage is allowed. Test pressure shall be held for at least 15 minutes.
86		12. Design of weld end valves shall be such that during field welding operations, the soft seals or plastic components of the valve (where ever used) is not liable to be damaged. The manufacture shall furnish necessary field welding instructions and post-weld test procedure to demonstrate integrity and leak-tightness of valves after field welding operations.
87		13. Gear operators, when provided, shall have a self-locking provision and shall be fully encased in water proof/ splash proof enclosure and shall be filled with suitable grease
88		14. For the manual operator of all valves, the diameter of the hand wheel or the length of operating wrench shall be such that under the maximum differential pressure, the total force required to operate the valve does not exceed 350N.
89		15. Manufacturer shall also indicate the number of turns of hand wheel in case of gear operators (along with their offer) required for Operating the valve from full open to full close position. The numbers of turn shall not exceed 250 for valves sizes up to 24" and 450 for valve size above 24".
90		16. Adequacy for Length of pup piece/ Nipple shall be confirmed by manufacturer so as to avoid damage to seats during field welding or post weld heat treatment.These nipples shall be welded to the valve body by the manufacturer before fitting the packings, seats & seals.
91		17. Name plate material shall be minimum stainless steel. Marking shall be as per MSS-SP-25
92		18. Valve body & other pressure containing parts shall be designed as per ASME Sec-VIII Div-I. Minimum thickness shall not be less than ASME B16.34.
93		19. For tag No./ Fluid Data/ Operating Data refer Process Document , P&IDs
94		20. Stem extension length shall be finalized during drawing approval stage after award of order.
95		21.For the valves to be installed underground the external surfaces of buried portion of the valve shall be painted with 100% Solid high build epoxy(Powercrete R-95) with a minimum dry film thickness of 1000 microns or 1.5 mm thick polyurethane coating
96		22. Bidder shall clearly write all / any deviation against each part material of valve in the space provided for. Wherever bidder agrees with company's spec bidder shall indicate "agreed". Flanges of flanged end cast/ forged body shall be integrally cast/ forged with the body of valve.
97		23. All Elastomereric material used for pressure tight sealing or drip sealing shall be of anti Explosive Decompression type and must be certified according to testing Procedures. Manufacturer shall submit test certificate confirming conformance with Anti Explosive Decompression. Manufacturer shall confirm the suitability of soft sealing and seating material for the pressure and temperature & service mentioned above in this data sheet.
98		24.Fire Safe test certificate qualifying the valves as per API 6FA/ API 607/ ISO 10497 carried out in last 10 years shall be furnished.
99		25. Flanges of flanged end cast/ forged body shall be integrally cast/ forged with the body of valve.Vendor to guarantee the suitability of seat/ seal material for the given service condition
100		26. Minimum all pressure containing and controlling parts of the valve shall be provided with EN 10204-3.2 certificate.

ENERGISING QUALITY	CLIENT : INDRADHANUSH GAS GRID LIMITED	JOB NO : C221052	
IGGL	PROJECT : NORTH EAST GAS GRID PHASE-III OF IGGL	DOC. NO.: C221052-00-PP-DS-2002B	
	DATA SHEET OF FE, ABOVEGROUND, MANUAL BALL VALVE DN 100 (NPS 4") Rating 150#, A1A, SPLIT BODY DESIGN	No. of Pages : 02	Revision: C1 (26.05.2022), D1 (30.06.2022)

Location		NAGALAND, MANIPUR, WEST BENGAL, SIKKIM - INDIA	MR No.	C221052-00-PP-MR-2002
SR.NO		C221052-DIPL-PC-PID-1001 TO 1013 & C221052-SGPL-PC-PID-1001 TO 1011	P.O No.	#
1	GENERAL	Valve Manufacturer		
2	GENERAL	Tag Numbers / Material Requisition Item No.	Refer Material Requistion (MR) Item No: 4 (SPLIT BODY DESIGN)	
3	GENERAL	Company's Specification No.	VPC-SS-PP-2004	
4	GENERAL	Category	-	
5	GENERAL	Pipeline Line No	Not Required	
6	GENERAL	Class	A1A, 150#	
7	DESIGN AND TEST REQUIREMENTS	Size	DN 100 (NPS 4")	
8	DESIGN AND TEST REQUIREMENTS	Type of Valve	Trunion Mounted, Double Block and Bleed, Antistatic, Vent Drain/ Flush Connection with Anti Blowout Stem, Split Body Design	
9	DESIGN AND TEST REQUIREMENTS	Type of Port (Full / Reduced)	Refer Material Requistion (Doc. No- C221052-00-PP-MR-2002)	
10	DESIGN AND TEST REQUIREMENTS	Design Temperature (º C) – Maximum	65	
11	DESIGN AND TEST REQUIREMENTS	Design Temperature (º C) – Minimum	-29	
12	DESIGN AND TEST REQUIREMENTS	Corrosion Allowance (mm)	1.5	
13	DESIGN AND TEST REQUIREMENTS	Installation (Aboveground/Underground)	Refer Material Requistion (MR)	
14	DESIGN AND TEST REQUIREMENTS	Service	Natural Gas (NG)	
15	DESIGN AND TEST REQUIREMENTS	End Connection	Flanged End	
16	DESIGN AND TEST REQUIREMENTS	Flange Face Finish	RF/125AARH for Flanged Ends	
17	DESIGN AND TEST REQUIREMENTS	Design Standards	API 6D	
18	DESIGN AND TEST REQUIREMENTS	End Connection Standard	ANSI B16.5 for Flanged Ends	
19	DESIGN AND TEST REQUIREMENTS	ASME Class	150#	
20	DESIGN AND TEST REQUIREMENTS	Stem Extension Requirement	Not Applicable	
21	DESIGN AND TEST REQUIREMENTS	Length of Stem Extension	Not Applicable	
22	DESIGN AND TEST REQUIREMENTS	Orientation of Stem	Perpendicular to Valve axis	
23	DESIGN AND TEST REQUIREMENTS	Type of Valve Operator	DN ≤ 100 mm (4") - Wrench / Lever - Pull Force 350N max.	
24	DESIGN AND TEST REQUIREMENTS	Valve Actuator Operating Time	Not Applicable	
25	DESIGN AND TEST REQUIREMENTS	Requirement of Locking Mechanism (LO / LC)	Refer Material Requistion (Doc. No- C221052-00-PP-MR-2002)	
26	DESIGN AND TEST REQUIREMENTS	Length of Pup Piece / Nipple (mm), (If Required) (Note-16) (Integrally welded to the BW valve on each side)	Not Applicable	
27	DESIGN AND TEST REQUIREMENTS	Pup Piece Size / Material Grade / Schdeule/ Thickness (Note-16)	As per Piping Material Specification	
28	DESIGN AND TEST REQUIREMENTS	Operator Specification No.	Not Applicable	
29	DESIGN AND TEST REQUIREMENTS	Valve Design Pressure (barg)	19	
30	DESIGN AND TEST REQUIREMENTS	Hydrostatic Test Pressure (barg) & Time	Body :28.5 barg & Test Duration as per API 6D	Seat : 20.9 barg & Test Duration as per API 6D
31	DESIGN AND TEST REQUIREMENTS	Pneumatic Test Pressure (barg) & Time	7.0 barg & Test Duration as per API 6D	
32	DESIGN AND TEST REQUIREMENTS	Charpy Impact Test (º C)	Yes (at -29 °C)	
33	DESIGN AND TEST REQUIREMENTS	Fire Safe Design (Note-24)	API 6FA / ISO10497	
34	DESIGN AND TEST REQUIREMENTS	Anti Static Testing Requirement	As per API 6D Latest Edition	
35	DESIGN AND TEST REQUIREMENTS	Hardness Test	248 HV10 max	
36	DESIGN AND TEST REQUIREMENTS	Painting	As per specification (Suitable for Industrial Corrosive Environment)	
37	DESIGN AND TEST REQUIREMENTS	Operator Data Sheet No.	Not Applicable	
38	PROCESS DATA (Applicable for Actuator)	Flow (Min/Nor/Max) (m^3/hr)	Not Applicable	
39	PROCESS DATA (Applicable for Actuator)	Pressure (Min/Nor/Max) (barg)	Not Applicable	
40	PROCESS DATA (Applicable for Actuator)	Temperature (Min/Nor/Max) (º C)	Not Applicable	
41	PROCESS DATA (Applicable for Actuator)	Max Shutoff DP (barg)	Not Applicable	
42	PROCESS DATA (Applicable for Actuator)	Viscosity (cP)	Not Applicable	
43	PROCESS DATA (Applicable for Actuator)	Density (Kg/m^3)	Not Applicable	
44	PROCESS DATA (Applicable for Actuator)	Mol . Wt	Not Applicable	
45	PROCESS DATA (Applicable for Actuator)	Sp Heat Ratio (Cp/Cv)	Not Applicable	
46	PROCESS DATA (Applicable for Actuator)	Compressibility (Z)	Not Applicable	
47	PROCESS DATA (Applicable for Actuator)	Ambient Temperature	Not Applicable	
48	CONNECTING PIPE DETAIL	Outside Diameter (Inch)	Size 4"	
49	CONNECTING PIPE DETAIL	Thickness (mm) / Schedule	As per Piping Material Specification	
50	CONNECTING PIPE DETAIL	Pipe Material	As per Piping Material Specification	
51	CONNECTING PIPE DETAIL	Design Code	ASME B31.8	
52	CONNECTING PIPE DETAIL	ASME Rating	150#	
53	CONNECTING PIPE DETAIL	Piping Class	A1A, 150#	
54	CONNECTING PIPE DETAIL	Orientation of Pipe	Suitable for all orientation	

ENERGISING QUALITY / IGGL	CLIENT : INDRADHANUSH GAS GRID LIMITED	JOB NO : C221052
	PROJECT : NORTH EAST GAS GRID PHASE-III OF IGGL	DOC. NO.: C221052-00-PP-DS-2002B
	DATA SHEET OF FE, ABOVEGROUND, MANUAL BALL VALVE DN 100 (NPS 4") Rating 150#, A1A, SPLIT BODY DESIGN	No. of Pages : 02 — Revision: C1 (26.05.2022), D1 (30.06.2022)

Location	NAGALAND, MANIPUR, WEST BENGAL, SIKKIM - INDIA	MR No.	C221052-00-PP-MR-2002
SR.NO	C221052-DIPL-PC-PID-1001 TO 1013 & C221052-SGPL-PC-PID-1001 TO 1011	P.O No.	#

		Part Description	Material Specified	Material Offered (By Bidder)
55	VALVE MATERIAL			
56		Body	ASTM A216 GR. WCC/ASTM 105	
57		Ball (Single Piece, Solid Construction)	SS-304 / SS-316 (Solid) OR (ASTM A105/ ASTM A216 Gr. WCC) + 75 micron ENP	
58		Seat Rings (No Casting)	(AISI 4140 +75 micron ENP)/ AISI 410/ SS 304/ SS 316	
59		Seat Seal	Primary Devlon V/ PEEK/ Viton with Secondary Metal to Metal	
60		Stem (No Casting)	(AISI 4140 +75 micron ENP)/ AISI 410 / SS 304 / SS 316	
61		Trunion	ASTM A216 GR. WCC/ASTM 105	
62		Stem Seal	VITON/ PTFE	
63		Body Seal	VITON/ PTFE	
64		Gland	13% Cr. Steel/ SS 316 / SS 304	
65		Stud Bolts/Nut	ASTM A 193 Gr. B7/ ASTM A 194 Gr. 2H	
66		Handle / Lever / Hand Wheel	Carbon Steel	

67	DATA TO BE PROVIDE BY VENDOR (if Applicable)	Valve Model No.		*
68		Flow Coefficient, Kv (Cubic Meters per Hour)		*
69		Valve Cavity Volume(CC)	Open position	*
70			Closed position	*
71		Operator Manufacturer / Model No.		*
72		Break-away Torque Under Max. Diff Pressure(Nm)		*
73		Running Torque (Open - Close/Close - Open) (Nm)		*

74	NOTES	**NOTES:**
75		1. Bidder to submit Soft Seal details and type, grade & class selected with manufacturer's recommendation like Pressure-Temperature Curve/Table for not to damage the soft seal during welding of valve ends at site.
76		2. This Data Sheet shall be read in conjunction with Piping Material Specification, valve Specification & other Tender Documents.
77		3. Dimension / Input Data as & where marked " * " shall be supplied by Vendor.
78		4. Manufacturer shall have valid API 6D license to use API monogram.
79		5. Valve design shall ensure repair of stem seals / packing under full line pressure.
80		6. 100.0 % Valve castings shall undergo Radiographic Examination.
81		7. Valves shall have support foot & lifting lugs as per valve Specification.
82		8. Valve design shall ensure repair of stem seals / packing under full line pressure.
83		9. Wrench operated valves shall be supplied with wrench.
84		10. The Charpy Impact temperature shall be -29°C as specified in data sheet and it shall superceded the Specification (VPC-SS-PP-2004) requirement at 0°C
85		11. A supplementary air seat test as per API 6D (Annex I, Para I.9 Type II) shall be carried out for all valves. A bubble tight seal is required without the use of any sealant. No leakage is allowed. Test pressure shall be held for at least 15 minutes.
86		12. Design of weld end valves shall be such that during field welding operations, the soft seals or plastic components of the valve (where ever used) is not liable to be damaged. The manufacture shall furnish necessary field welding instructions and post-weld test procedure to demonstrate integrity and leak-tightness of valves after field welding operations.
87		13. Gear operators, when provided, shall have a self-locking provision and shall be fully encased in water proof/ splash proof enclosure and shall be filled with suitable grease
88		14. For the manual operator of all valves, the diameter of the hand wheel or the length of operating wrench shall be such that under the maximum differential pressure, the total force required to operate the valve does not exceed 350N.
89		15. Manufacturer shall also indicate the number of turns of hand wheel in case of gear operators (along with their offer) required for Operating the valve from full open to full close position. The numbers of turn shall not exceed 250 for valves sizes up to 24" and 450 for valve size above 24".
90		16. Adequacy for Length of pup piece/ Nipple shall be confirmed by manufacturer so as to avoid damage to seats during field welding or post weld heat treatment.These nipples shall be welded to the valve body by the manufacturer before fitting the packings, seats & seals.
91		17. Name plate material shall be minimum stainless steel. Marking shall be as per MSS-SP-25
92		18. Valve body & other pressure containing parts shall be designed as per ASME Sec-VIII Div-I. Minimum thickness shall not be less than ASME B16.34.
93		19. For tag No./ Fluid Data/ Operating Data refer Process Document , P&IDs
94		20. Stem extension length shall be finalized during drawing approval stage after award of order.
95		21.For the valves to be installed underground the external surfaces of buried portion of the valve shall be painted with 100% Solid high build epoxy(Powercrete R-95) with a minimum dry film thickness of 1000 microns or 1.5 mm thick polyurethane coating
96		22. Bidder shall clearly write all / any deviation against each part material of valve in the space provided for. Wherever bidder agrees with company's spec bidder shall indicate "agreed". Flanges of flanged end cast/ forged body shall be integrally cast/ forged with the body of valve.
97		23. All Elastomereric material used for pressure tight sealing or drip sealing shall be of anti Explosive Decompression type and must be certified according to testing Procedures. Manufacturer shall submit test certificate confirming conformance with Anti Explosive Decompression. Manufacturer shall confirm the suitability of soft sealing and seating material for the pressure and temperature & service mentioned above in this data sheet.
98		24.Fire Safe test certificate qualifying the valves as per API 6FA/ API 607/ ISO 10497 carried out in last 10 years shall be furnished.
99		25. Flanges of flanged end cast/ forged body shall be integrally cast/ forged with the body of valve.Vendor to guarantee the suitability of seat/ seal material for the given service condition
100		26. Minimum all pressure containing and controlling parts of the valve shall be provided with EN 10204-3.2 certificate.

ENERGISING QUALITY	CLIENT : INDRADHANUSH GAS GRID LIMITED	JOB NO : C221052	
	PROJECT : NORTH EAST GAS GRID PHASE-III OF IGGL	DOC. NO.: C221052-00-PP-DS-2002C	
	DATA SHEET OF BW, ABOVEGROUND, ACTUATED BALL VALVE (GOOV) DN 300 (NPS 12") Rating 600#, D1A/ MAILINE X-70, WELDED BODY DESIGN	No. of Pages : 02	Revision: C1 26.05.2022; D1 30.06.2022

Location	NAGALAND, MANIPUR, WEST BENGAL, SIKKIM - INDIA	MR No.	C221052-00-PP-MR-2002
SR.NO	C221052-DIPL-PC-PID-1001 TO 1013 & C221052-SGPL-PC-PID-1001 TO 1011	P.O No.	#

1	GENERAL	Valve Manufacturer		
2		Tag Numbers / Material Requisition Item No.		Refer Material Requistion (MR) Item No: 9, 11
3		Company's Specification No.		VPC-SS-PP-2004
4		Category		-
5		Pipeline Line No		Not Required
6		Class		D1A, 600#/ Mainline X-70 (600#)
7	DESIGN AND TEST REQUIREMENTS	Size		DN 300 (NPS 12")
8		Type of Valve		Trunion Mounted, Double Block and Bleed, Antistatic, Vent Drain/ Flush Connection with Anti Blowout Stem, Welded Body Design
9		Type of Port (Full / Reduced)		Refer Material Requistion (Doc. No- C221052-00-PP-MR-2002)
10		Design Temperature (º C)	Maximum	65
11			Minimum	-29
12		Corrosion Allowance (mm)		1.5
13		Installation (Aboveground/Underground)		Above ground
14		Service		Natural Gas (NG)
15		End Connection		Butt Welded Ends
16		Flange Face Finish		Not Applicable
17		Design Standards		API 6D
18		End Connection Standard		ANSI B16.5 for Flanged Ends/ ANSI 16.25 for Butt Welded Ends
19		ASME Class		600#
20		Stem Extension Requirement		Not Required
21		Length of Stem Extension (If Required , Note-20)		Not Applicable
22		Orientation of Stem		Perpendicular to Valve axis
23		Type of Valve Operator		Gas Over Oil Actuated
24		Valve Actuator Operating Time		Gas Over Oil Actuated Valve (Refer Actuator Data Sheet Doc. No: C221052-00-IN-DS-5002)
25		Requirement of Locking Mechanism (LO / LC)		Not Applicable
26		Length of Pup Piece / Nipple (mm), (If Required) (Note-16)		Required for Welded End Valves, as per Ball Valve Specification
27		Pup Piece Size / Material Grade / Schdeule/ Thickness (Note-16)		For D1A Pipe Class: As per Piping Material Specification For Mainline : API 5L GR X-70 PSL2, thickness 9.53 mm
28		Operator Specification No.		VCS-SPC-5205
29		Valve Design Pressure (barg)		90.22
30		Hydrostatic Test Pressure (barg) & Time		Body :135.33 barg & Test Duration as per API 6D Seat : 99.24 barg & Test Duration as per API 6D
31		Pneumatic Test Pressure (barg) & Time		7.0 barg & Test Duration as per API 6D
32		Charpy Impact Test (º C)		Yes (at -29 °C)
33		Fire Safe Design (Note-24 & 25)		API 6FA / ISO10497
34		Anti Static Testing Requirement		As per API 6D Latest Edition
35		Hardness Test		248 HV10 max
36		Painting (Note-21)		As per specification (Suitable for Industrial Corrosive Environment) Note-21
37		Operator Data Sheet No.		(Refer Actuator Data Sheet Doc. No: C221052-00-IN-DS-5002)
38	PROCESS DATA (Applicable for Actuator)	Flow (Min/Nor/Max) (m^3/hr)		Refer Process Data Sheet
39		Pressure (Min/Nor/Max) (barg)		
40		Temperature (Min/Nor/Max) (º C)		
41		Max Shutoff DP (barg)		
42		Viscosity (cP)		
43		Density (Kg/m^3)		
44		Mol . Wt		
45		Sp Heat Ratio (Cp/Cv)		
46		Compressibility (Z)		
47		Ambient Temperature		
48	CONNECTING PIPE DETAIL	Outside Diameter (Inch)		12"
49		Thickness (mm) / Schedule		For Pipe Class D1A: As per Piping Material Specification For Mainline : API 5L GR X-70 PSL2, thickness 9.53 mm
50		Pipe Material		For Pipe Class D1A: As per Piping Material Specification For Mainline : API 5L GR X-70 PSL2
51		Design Code		ASME B31.8
52		ASME Rating		600#
53		Piping Class		D1A, 600#/ Mainline X-70 (600#)
54		Orientation of Pipe		Suitable for all orientation

ENERGISING QUALITY	IGGL	CLIENT : INDRADHANUSH GAS GRID LIMITED	JOB NO : C221052
		PROJECT : NORTH EAST GAS GRID PHASE-III OF IGGL	DOC. NO.: C221052-00-PP-DS-2002C
		DATA SHEET OF BW, ABOVEGROUND, ACTUATED BALL VALVE (GOOV) DN 300 (NPS 12") Rating 600#, D1A/ MAILINE X-70, WELDED BODY DESIGN	No. of Pages : 02 — Revision: C1 (26.05.2022), D1 (30.06.2022)

Location	NAGALAND, MANIPUR, WEST BENGAL, SIKKIM - INDIA	MR No.	C221052-00-PP-MR-2002
SR.NO	C221052-DIPL-PC-PID-1001 TO 1013 & C221052-SGPL-PC-PID-1001 TO 1011	P.O No.	#

		Part Description	Material Specified	Material Offered (By Bidder)
55	VALVE MATERIAL			
56		Body	ASTM A216 GR. WCC/ASTM 105	
57		Ball (Single Piece, Solid Construction)	SS-304 / SS-316 (Solid) OR (ASTM A105/ ASTM A216 Gr. WCC) + 75 micron ENP	
58		Seat Rings (No Casting)	(AISI 4140 +75 micron ENP)/ AISI 410/ SS 304/ SS 316	
59		Seat Seal	Primary Devlon V/ PEEK/ Viton with Secondary Metal to Metal	
60		Stem (No Casting)	(AISI 4140 +75 micron ENP)/ AISI 410 / SS 304 / SS 316	
61		Trunion	ASTM A216 GR. WCC/ASTM 105	
62		Stem Seal	VITON/ PTFE	
63		Body Seal	VITON/ PTFE	
64		Gland	13% Cr. Steel/ SS 316 / SS 304	
65		Stud Bolts/Nut	ASTM A 193 Gr. B7/ ASTM A 194 Gr. 2H	
66		Handle / Lever / Hand Wheel	Carbon Steel	

67	DATA TO BE PROVIDE BY VENDOR (if Applicable)	Valve Model No.		*
68		Flow Coefficient, Kv (Cubic Meters per Hour)		*
69		Valve Cavity Volume(CC)	Open position	*
70			Closed position	*
71		Operator Manufacturer / Model No.		*
72		Break-away Torque Under Max. Diff Pressure(Nm)		*
73		Running Torque (Open - Close/Close - Open) (Nm)		*

74	NOTES	**NOTES:**
75		1. Bidder to submit Soft Seal details and type, grade & class selected with manufacturer's recommendation like Pressure-Temperature Curve/Table for not to damage the soft seal during welding of valve ends at site.
76		2. This Data Sheet shall be read in conjunction with Piping Material Specification, valve Specification & other Tender Documents.
77		3. Dimension / Input Data as & where marked " * " shall be supplied by Vendor.
78		4. Manufacturer shall have valid API 6D license to use API monogram.
79		5. Valve design shall ensure repair of stem seals / packing under full line pressure.
80		6. 100.0 % Valve castings shall undergo Radiographic Examination.
81		7. Valves shall have support foot & lifting lugs as per valve Specification.
82		8. Valve design shall ensure repair of stem seals / packing under full line pressure.
83		9. Wrench operated valves shall be supplied with wrench.
84		10. The Charpy Impact temperature shall be -29°C as specified in data sheet and it shall superceded the Specification (VPC-SS-PP-2004) requirement at 0°C
85		11. A supplementary air seat test as per API 6D (Annex I, Para I.9 Type II) shall be carried out for all valves. A bubble tight seal is required without the use of any sealant. No leakage is allowed. Test pressure shall be held for at least 15 minutes.
86		12. Design of weld end valves shall be such that during field welding operations, the soft seals or plastic components of the valve (where ever used) is not liable to be damaged. The manufacture shall furnish necessary field welding instructions and post-weld test procedure to demonstrate integrity and leak-tightness of valves after field welding operations.
87		13. Gear operators, when provided, shall have a self-locking provision and shall be fully encased in water proof/ splash proof enclosure and shall be filled with suitable grease
88		14. For the manual operator of all valves, the diameter of the hand wheel or the length of operating wrench shall be such that under the maximum differential pressure, the total force required to operate the valve does not exceed 350N.
89		15. Manufacturer shall also indicate the number of turns of hand wheel in case of gear operators (along with their offer) required for Operating the valve from full open to full close position. The numbers of turn shall not exceed 250 for valves sizes up to 24" and 450 for valve size above 24".
90		16. Adequacy for Length of pup piece/ Nipple shall be confirmed by manufacturer so as to avoid damage to seats during field welding or post weld heat treatment.These nipples shall be welded to the valve body by the manufacturer before fitting the packings, seats & seals.
91		17. Name plate material shall be minimum stainless steel. Marking shall be as per MSS-SP-25
92		18. Valve body & other pressure containing parts shall be designed as per ASME Sec-VIII Div-I. Minimum thickness shall not be less than ASME B16.34.
93		19. For tag No./ Fluid Data/ Operating Data refer Process Document , P&IDs
94		20. Stem extension length shall be finalized during drawing approval stage after award of order.
95		21.For the valves to be installed underground the external surfaces of buried portion of the valve shall be painted with 100% Solid high build epoxy(Powercrete R-95) with a minimum dry film thickness of 1000 microns or 1.5 mm thick polyurethane coating
96		22. Bidder shall clearly write all / any deviation against each part material of valve in the space provided for. Wherever bidder agrees with company's spec bidder shall indicate "agreed". Flanges of flanged end cast/ forged body shall be integrally cast/ forged with the body of valve.
97		23. All Elastomereric material used for pressure tight sealing or drip sealing shall be of anti Explosive Decompression type and must be certified according to testing Procedures. Manufacturer shall submit test certificate confirming conformance with Anti Explosive Decompression. Manufacturer shall confirm the suitability of soft sealing and seating material for the pressure and temperature & service mentioned above in this data sheet.
98		24.Fire Safe test certificate qualifying the valves as per API 6FA/ API 607/ ISO 10497 carried out in last 10 years shall be furnished.
99		25. Flanges of flanged end cast/ forged body shall be integrally cast/ forged with the body of valve.Vendor to guarantee the suitability of seat/ seal material for the given service condition
100		26. Minimum all pressure containing and controlling parts of the valve shall be provided with EN 10204-3.2 certificate.

ENERGISING QUALITY / IGGL	CLIENT : INDRADHANUSH GAS GRID LIMITED	JOB NO : C221052
	PROJECT : NORTH EAST GAS GRID PHASE-III OF IGGL	DOC. NO.: C221052-00-PP-DS-2002D
	DATA SHEET OF BW, UNDERGROUND, ACTUATED BALL VALVE (GOOV) DN 300 (NPS 12") Rating 600#, MAINLINE X-70, WELDED BODY DESIGN	No. of Pages : 02 — Revision: C1 (26.05.2022), D1 (30.06.2022)

Location		NAGALAND, MANIPUR, WEST BENGAL, SIKKIM - INDIA	MR No.	C221052-00-PP-MR-2002
SR.NO		C221052-DIPL-PC-PID-1001 TO 1013 & C221052-SGPL-PC-PID-1001 TO 1011	P.O No.	#
1	GENERAL	Valve Manufacturer		
2	GENERAL	Tag Numbers / Material Requisition Item No.	Refer Material Requistion (MR) Item No: 10	
3	GENERAL	Company's Specification No.	VPC-SS-PP-2004	
4	GENERAL	Category	-	
5	GENERAL	Pipeline Line No	Not Required	
6	GENERAL	Class	Mainline X-70 (600#)	
7	DESIGN AND TEST REQUIREMENTS	Size	DN 300 (NPS 12")	
8	DESIGN AND TEST REQUIREMENTS	Type of Valve	Trunion Mounted, Double Block and Bleed, Antistatic, Vent Drain/ Flush Connection with Anti Blowout Stem, Welded Body Design	
9	DESIGN AND TEST REQUIREMENTS	Type of Port (Full / Reduced)	Refer Material Requistion (Doc. No- C221052-00-PP-MR-2002)	
10	DESIGN AND TEST REQUIREMENTS	Design Temperature (º C) — Maximum	65	
11	DESIGN AND TEST REQUIREMENTS	Design Temperature (º C) — Minimum	-29	
12	DESIGN AND TEST REQUIREMENTS	Corrosion Allowance (mm)	1.5	
13	DESIGN AND TEST REQUIREMENTS	Installation (Aboveground/Underground)	Underground	
14	DESIGN AND TEST REQUIREMENTS	Service	Natural Gas (NG)	
15	DESIGN AND TEST REQUIREMENTS	End Connection	Butt Welded Ends	
16	DESIGN AND TEST REQUIREMENTS	Flange Face Finish	Not Applicable	
17	DESIGN AND TEST REQUIREMENTS	Design Standards	API 6D	
18	DESIGN AND TEST REQUIREMENTS	End Connection Standard	ANSI B16.5 for Flanged Ends/ ANSI 16.25 for Butt Welded Ends	
19	DESIGN AND TEST REQUIREMENTS	ASME Class	600#	
20	DESIGN AND TEST REQUIREMENTS	Stem Extension Requirement	Required	
21	DESIGN AND TEST REQUIREMENTS	Length of Stem Extension (If Required , Note-20)	Required , 2.5-3.0 meter from Centerline of pipe (Refer Note-20)	
22	DESIGN AND TEST REQUIREMENTS	Orientation of Stem	Perpendicular to Valve axis	
23	DESIGN AND TEST REQUIREMENTS	Type of Valve Operator	Gas Over Oil Actuated	
24	DESIGN AND TEST REQUIREMENTS	Valve Actuator Operating Time	Gas Over Oil Actuated Valve (Refer Actuator Data Sheet Doc. No: C221052-00-IN-DS-5002)	
25	DESIGN AND TEST REQUIREMENTS	Requirement of Locking Mechanism (LO / LC)	Not Applicable	
26	DESIGN AND TEST REQUIREMENTS	Length of Pup Piece / Nipple (mm), (If Required) (Note-16)	Required for Welded End Valves, as per Ball Valve Specification	
27	DESIGN AND TEST REQUIREMENTS	Pup Piece Size / Material Grade / Schdeule/ Thickness (Note-16)	12", API 5L GR X-70 PSL2, thickness 8.38 mm	
28	DESIGN AND TEST REQUIREMENTS	Operator Specification No.	VCS-SPC-5205	
29	DESIGN AND TEST REQUIREMENTS	Valve Design Pressure (barg)	90.22	
30	DESIGN AND TEST REQUIREMENTS	Hydrostatic Test Pressure (barg) & Time	Body :135.33 barg & Test Duration as per API 6D	Seat : 99.24 barg & Test Duration as per API 6D
31	DESIGN AND TEST REQUIREMENTS	Pneumatic Test Pressure (barg) & Time	7.0 barg & Test Duration as per API 6D	
32	DESIGN AND TEST REQUIREMENTS	Charpy Impact Test (º C)	Yes (at -29 °C)	
33	DESIGN AND TEST REQUIREMENTS	Fire Safe Design (Note-24 & 25)	API 6FA / ISO10497	
34	DESIGN AND TEST REQUIREMENTS	Anti Static Testing Requirement	As per API 6D Latest Edition	
35	DESIGN AND TEST REQUIREMENTS	Hardness Test	248 HV10 max	
36	DESIGN AND TEST REQUIREMENTS	Painting	Note-21	
37	DESIGN AND TEST REQUIREMENTS	Operator Data Sheet No.	(Refer Actuator Data Sheet Doc. No: C221052-00-IN-DS-5002)	
38	PROCESS DATA (Applicable for Actuator)	Flow (Min/Nor/Max) (m^3/hr)	Refer Process Data Sheet	
39	PROCESS DATA (Applicable for Actuator)	Pressure (Min/Nor/Max) (barg)		
40	PROCESS DATA (Applicable for Actuator)	Temperature (Min/Nor/Max) (º C)		
41	PROCESS DATA (Applicable for Actuator)	Max Shutoff DP (barg)		
42	PROCESS DATA (Applicable for Actuator)	Viscosity (cP)		
43	PROCESS DATA (Applicable for Actuator)	Density (Kg/m^3)		
44	PROCESS DATA (Applicable for Actuator)	Mol . Wt		
45	PROCESS DATA (Applicable for Actuator)	Sp Heat Ratio (Cp/Cv)		
46	PROCESS DATA (Applicable for Actuator)	Compressibility (Z)		
47	PROCESS DATA (Applicable for Actuator)	Ambient Temperature		
48	CONNECTING PIPE DETAIL	Outside Diameter (Inch)	12"	
49	CONNECTING PIPE DETAIL	Thickness (mm) / Schedule	For Mainline : API 5L GR X-70 PSL2, thickness 8.38 mm	
50	CONNECTING PIPE DETAIL	Pipe Material	API 5L GR X-70 PSL2	
51	CONNECTING PIPE DETAIL	Design Code	ASME B31.8	
52	CONNECTING PIPE DETAIL	ASME Rating	600#	
53	CONNECTING PIPE DETAIL	Piping Class	Mainline X-70	
54	CONNECTING PIPE DETAIL	Orientation of Pipe	Suitable for all orientation	

ENERGISING QUALITY / IGGL	CLIENT : INDRADHANUSH GAS GRID LIMITED	JOB NO : C221052
	PROJECT : NORTH EAST GAS GRID PHASE-III OF IGGL	DOC. NO.: C221052-00-PP-DS-2002D
	DATA SHEET OF BW, UNDERGROUND, ACTUATED BALL VALVE (GOOV) DN 300 (NPS 12") Rating 600#, MAINLINE X-70, WELDED BODY DESIGN	No. of Pages : 02 — Revision: C1 (26.05.2022), D1 (30.06.2022)

Location	NAGALAND, MANIPUR, WEST BENGAL, SIKKIM - INDIA	MR No.	C221052-00-PP-MR-2002
SR.NO	C221052-DIPL-PC-PID-1001 TO 1013 & C221052-SGPL-PC-PID-1001 TO 1011	P.O No.	#

		Part Description	Material Specified	Material Offered (By Bidder)
55	VALVE MATERIAL			
56		Body	ASTM A216 GR. WCC/ASTM 105	
57		Ball (Single Piece, Solid Construction)	SS-304 / SS-316 (Solid) OR (ASTM A105/ ASTM A216 Gr. WCC) + 75 micron ENP	
58		Seat Rings (No Casting)	(AISI 4140 +75 micron ENP)/ AISI 410/ SS 304/ SS 316	
59		Seat Seal	Primary Devlon V/ PEEK/ Viton with Secondary Metal to Metal	
60		Stem (No Casting)	(AISI 4140 +75 micron ENP)/ AISI 410 / SS 304 / SS 316	
61		Trunion	ASTM A216 GR. WCC/ASTM 105	
62		Stem Seal	VITON/ PTFE	
63		Body Seal	VITON/ PTFE	
64		Gland	13% Cr. Steel/ SS 316 / SS 304	
65		Stud Bolts/Nut	ASTM A 193 Gr. B7/ ASTM A 194 Gr. 2H	
66		Handle / Lever / Hand Wheel	Carbon Steel	

67	DATA TO BE PROVIDE BY VENDOR (if Applicable)	Valve Model No.		*
68		Flow Coefficient, Kv (Cubic Meters per Hour)		*
69		Valve Cavity Volume(CC)	Open position	*
70			Closed position	*
71		Operator Manufacturer / Model No.		*
72		Break-away Torque Under Max. Diff Pressure(Nm)		*
73		Running Torque (Open - Close/Close - Open) (Nm)		*

74	NOTES	**NOTES:**
75		1. Bidder to submit Soft Seal details and type, grade & class selected with manufacturer's recommendation like Pressure-Temperature Curve/Table for not to damage the soft seal during welding of valve ends at site.
76		2. This Data Sheet shall be read in conjunction with Piping Material Specification, valve Specification & other Tender Documents.
77		3. Dimension / Input Data as & where marked " * " shall be supplied by Vendor.
78		4. Manufacturer shall have valid API 6D license to use API monogram.
79		5. Valve design shall ensure repair of stem seals / packing under full line pressure.
80		6. 100.0 % Valve castings shall undergo Radiographic Examination.
81		7. Valves shall have support foot & lifting lugs as per valve Specification.
82		8. Valve design shall ensure repair of stem seals / packing under full line pressure.
83		9. Wrench operated valves shall be supplied with wrench.
84		10. The Charpy Impact temperature shall be -29°C as specified in data sheet and it shall superceded the Specification (VPC-SS-PP-2004) requirement at 0°C
85		11. A supplementary air seat test as per API 6D (Annex I, Para I.9 Type II) shall be carried out for all valves. A bubble tight seal is required without the use of any sealant. No leakage is allowed. Test pressure shall be held for at least 15 minutes.
86		12. Design of weld end valves shall be such that during field welding operations, the soft seals or plastic components of the valve (where ever used) is not liable to be damaged. The manufacture shall furnish necessary field welding instructions and post-weld test procedure to demonstrate integrity and leak-tightness of valves after field welding operations.
87		13. Gear operators, when provided, shall have a self-locking provision and shall be fully encased in water proof/ splash proof enclosure and shall be filled with suitable grease
88		14. For the manual operator of all valves, the diameter of the hand wheel or the length of operating wrench shall be such that under the maximum differential pressure, the total force required to operate the valve does not exceed 350N.
89		15. Manufacturer shall also indicate the number of turns of hand wheel in case of gear operators (along with their offer) required for Operating the valve from full open to full close position. The numbers of turn shall not exceed 250 for valves sizes up to 24" and 450 for valve size above 24".
90		16. Adequacy for Length of pup piece/ Nipple shall be confirmed by manufacturer so as to avoid damage to seats during field welding or post weld heat treatment.These nipples shall be welded to the valve body by the manufacturer before fitting the packings, seats & seals.
91		17. Name plate material shall be minimum stainless steel. Marking shall be as per MSS-SP-25
92		18. Valve body & other pressure containing parts shall be designed as per ASME Sec-VIII Div-I. Minimum thickness shall not be less than ASME B16.34.
93		19. For tag No./ Fluid Data/ Operating Data refer Process Document , P&IDs
94		20. Stem extension length shall be finalized during drawing approval stage after award of order.
95		21.For the valves to be installed underground the external surfaces of buried portion of the valve shall be painted with 100% Solid high build epoxy(Powercrete R-95) with a minimum dry film thickness of 1000 microns or 1.5 mm thick polyurethane coating
96		22. Bidder shall clearly write all / any deviation against each part material of valve in the space provided for. Wherever bidder agrees with company's spec bidder shall indicate "agreed". Flanges of flanged end cast/ forged body shall be integrally cast/ forged with the body of valve.
97		23. All Elastomereric material used for pressure tight sealing or drip sealing shall be of anti Explosive Decompression type and must be certified according to testing Procedures. Manufacturer shall submit test certificate confirming conformance with Anti Explosive Decompression. Manufacturer shall confirm the suitability of soft sealing and seating material for the pressure and temperature & service mentioned above in this data sheet.
98		24.Fire Safe test certificate qualifying the valves as per API 6FA/ API 607/ ISO 10497 carried out in last 10 years shall be furnished.
99		25. Flanges of flanged end cast/ forged body shall be integrally cast/ forged with the body of valve.Vendor to guarantee the suitability of seat/ seal material for the given service condition
100		26. Minimum all pressure containing and controlling parts of the valve shall be provided with EN 10204-3.2 certificate.

ENERGISING QUALITY / IGGL	**CLIENT : INDRADHANUSH GAS GRID LIMITED**	**JOB NO : C221052**
	PROJECT : NORTH EAST GAS GRID PHASE-III OF IGGL	**DOC. NO.: C221052-00-PP-DS-2002E**
	DATA SHEET OF FE & BW, ABOVEGROUND, PLUG VALVE DN 100 (NPS 4") Rating 600#, D1A	**No. of Pages : 02** — Revision: C1 (26.05.2022), D1 (30.06.2022)

Location		**NAGALAND, MANIPUR, WEST BENGAL, SIKKIM - INDIA**	**MR No.**	**C221052-00-PP-MR-2002**
SR.NO		**C221052-DIPL-PC-PID-1001 TO 1013 & C221052-SGPL-PC-PID-1001 TO 1011**	**P.O No.**	**#**
1	**GENERAL**	Valve Manufacturer		
2		Tag Numbers / Material Requisition Item No.	**Refer Material Requistion (MR) Item No: 12 & 13**	
3		Company's Specification No.	**VCS-SS-PP-2051**	
4		Category	**-**	
5		Pipeline Line No	**Not Required**	
6		Class	**D1A, 600#**	
7	**DESIGN AND TEST REQUIREMENTS**	Size	**DN 100 (NPS 4")**	
8		Type of Valve	**Regular Pattern**	
9		Type of Port (Full / Reduced)	**Refer Material Requistion (Doc. No- C221052-00-PP-MR-2002)**	
10		Design Temperature (º C) — Maximum	**65**	
11		Design Temperature (º C) — Minimum	**-29**	
12		Corrosion Allowance (mm)	**1.5**	
13		Installation (Aboveground/Underground)	**AboveGround**	
14		Service	**Natural Gas (NG)**	
15		End Connection	**Refer Material Requistion (Doc. No- C221052-00-PP-MR-2002)**	
16		Flange Face Finish	**RF/125AARH for Flanged Ends (As applicable)**	
17		Design Standards	**API 6D**	
18		End Connection Standard	**ANSI B16.5 for Flanged Ends (As applicable)/ ANSI 16.25 for Butt Welded Ends (As applicable)**	
19		ASME Class	**600#**	
20		Stem Extension Requirement	**Not Applicable**	
21		Length of Stem Extension	**Not Applicable**	
22		Orientation of Stem	**Not Applicable**	
23		Type of Valve Operator	**As per Standard Specification**	
24		Valve Actuator Operating Time	**Not Applicable**	
25		Requirement of Locking Mechanism (LO / LC)	**Refer Material Requistion (Doc. No- C221052-00-PP-MR-2002)**	
26		Length of Pup Piece / Nipple (mm), (If Required) (Note-16) (Integrally welded to the BW valve on each side)	**Not Applicable**	
27		Pup Piece Size / Material Grade / Schdeule/ Thickness (Note-16)	**Not Applicable**	
28		Operator Specification No.	**Not Applicable**	
29		Valve Design Pressure (barg)	**90.22**	
30		Hydrostatic Test Pressure (barg) & Time	**Body :135.33 barg & Test Duration as per API 6D**	**Seat : 99.24 barg & Test Duration as per API 6D**
31		Pneumatic Test Pressure (barg) & Time	**7.0 barg & Test Duration as per API 6D**	
32		Charpy Impact Test (º C)	**Yes (at -29 °C)**	
33		Fire Safe Design (Note-24)	**API 6FA / API 607**	
34		Anti Static Testing Requirement	**As per API 6D Latest Edition**	
35		Hardness Test	**248 HV10 max**	
36		Painting (Note-17)	**As per specification (Suitable for Industrial Corrosive Environment) Note-17**	
37		Operator Data Sheet No.	**Not Applicable**	
38	**PROCESS DATA (Applicable for Actuator)**	Flow (Min/Nor/Max) (m^3/hr)	**Not Applicable**	
39		Pressure (Min/Nor/Max) (barg)	**Not Applicable**	
40		Temperature (Min/Nor/Max) (º C)	**Not Applicable**	
41		Max Shutoff DP (barg)	**Not Applicable**	
42		Viscosity (cP)	**Not Applicable**	
43		Density (Kg/m^3)	**Not Applicable**	
44		Mol . Wt	**Not Applicable**	
45		Sp Heat Ratio (Cp/Cv)	**Not Applicable**	
46		Compressibility (Z)	**Not Applicable**	
47		Ambient Temperature	**Not Applicable**	
48	**CONNECTING PIPE DETAIL**	Outside Diameter (Inch)	**Size 4"**	
49		Thickness (mm) / Schedule	**As per Piping Material Specification**	
50		Pipe Material	**As per Piping Material Specification**	
51		Design Code	**ASME B31.8**	
52		ASME Rating	**600#**	
53		Piping Class	**D1A, 600#**	
54		Orientation of Pipe	**Suitable for all orientation**	

ENERGISING QUALITY	CLIENT : INDRADHANUSH GAS GRID LIMITED		JOB NO : C221052
IGGL	PROJECT : NORTH EAST GAS GRID PHASE-III OF IGGL		DOC. NO.: C221052-00-PP-DS-2002E
	DATA SHEET OF FE & BW, ABOVEGROUND, PLUG VALVE DN 100 (NPS 4") Rating 600#, D1A	No. of Pages : 02	Revision: C1 26.05.2022; D1 30.06.2022

Location	NAGALAND, MANIPUR, WEST BENGAL, SIKKIM - INDIA	MR No.	C221052-00-PP-MR-2002
SR.NO	C221052-DIPL-PC-PID-1001 TO 1013 & C221052-SGPL-PC-PID-1001 TO 1011	P.O No.	#

		Part Description	Material Specified	Material Offered (By Bidder)
55	VALVE MATERIAL			
56		Body	ASTM A216 GR. WCB/ASTM A105	
57		Plug	(ASTM A216 GR. WCB/ASTM A105) + 75 microns ENP Coating	
58		Cover	ASTM A216 GR. WCB/ASTM A105	
59		Stem	(AISI 4140 + 75 microns ENP Coating)/ AISI 410	
60		Stem Seal	PTFE/ Graphite	
62		Body Stud	ASTM A 193 Gr. B7	
63		Body Nut	ASTM A 194 Gr. 2H	
66		Handle / Lever / Hand Wheel	Carbon Steel	

67	DATA TO BE PROVIDE BY VENDOR (if Applicable)	Valve Model No.		*
68		Flow Coefficient, Kv (Cubic Meters per Hour)		*
69		Valve Cavity Volume(CC)	Open position	*
70			Closed position	*
71		Operator Manufacturer / Model No.		*
72		Break-away Torque Under Max. Diff Pressure(Nm)		*
73		Running Torque (Open - Close/Close - Open) (Nm)		*

74	NOTES	**NOTES:**
75		1. This Data Sheet shall be read in conjunction with Tender Documents & Specifications.
76		2. Dimension / Input Data as & where marked " * " shall be supplied by Vendor.
77		3.All tests shall be carried out as per API 6D & BSEN 12266 part-1.
78		4. Gland packing assembly shall permit repair of gland packing under full line pressure.
79		5. Valve design shall ensure repair of stem seals / packing under full line pressure.
80		6. 100.0 % Valve castings shall undergo Radiographic Examination.
81		7. Valves shall have support foot & lifting lugs as per valve Specification.
82		8. Valve design shall ensure repair of stem seals / packing under full line pressure.
83		9. Wrench operated valves shall be supplied with wrench.
84		10. The Charpy Impact temperature shall be -29°C as specified in data sheet and it shall superceded the Specification (VPC-SS-PP-2004) requirement at 0°C
85		11. Design of Welded Valves shall be such that during field welding operation, the soft or plastic components of valve are not liable to be damages.
86		12. Gasket Material Graphite Shall Be Provided With Corrosion Inhibitor.
87		13. Valve wall thickness shall be as per ANSI B16.34.
88		14 .For the valves to be installed underground the external surfaces of buried portion of the valve shall be painted with 100% Solid high build epoxy (Powercrete R-95) with a minimum dry film thickness of 1000 microns or 1.5 mm thick polyurethane coating
89		15. Stem extension length shall be finalized during drawing approval stage after award of order.
90		16.For the valves to be installed underground the external surfaces of buried portion of the valve shall be painted with 100% Solid high build epoxy(Powercrete R-95) with a minimum dry film thickness of 1000 microns or 1.5 mm thick polyurethane coating
91		17. Fire Safe test certificate qualifying the valves as per API 6FA/ API 607/ ISO 10497 carried out in last 10 years shall be furnished.
92		18. Stops shall be provided for positive alignment of plug with ports and ensure proper installation of handle.
93		19. Compressed asbestos fibre (CAF) shall not be used for body sealing / gasket materials.
94		20. Minimum all pressure containing and controlling parts of the valve shall be provided with EN 10204-3.2 certificate.

ENERGISING QUALITY	CLIENT : INDRADHANUSH GAS GRID LIMITED	JOB NO : C221052	
	PROJECT : NORTH EAST GAS GRID PHASE-III OF IGGL	DOC. NO.: C221052-00-PP-DS-2002F	
	DATA SHEET OF FE/BW, ABOVEGROUND/UNDERGROUND, GLOBE VALVE DN 100 (NPS 4") Rating 600#, D1A	No. of Pages : 02	Revision: C1 (26.05.2022), D1 (30.06.2022)

Location		NAGALAND, MANIPUR, WEST BENGAL, SIKKIM - INDIA	MR No.	C221052-00-PP-MR-2002
SR.NO		C221052-DIPL-PC-PID-1001 TO 1013 & C221052-SGPL-PC-PID-1001 TO 1011	P.O No.	#
1	GENERAL	Valve Manufacturer		
2	GENERAL	Tag Numbers / Material Requisition Item No.	Refer Material Requistion (MR) Item No: 14, 15	
3	GENERAL	Company's Specification No.	VPC-SS-PP-2504	
4	GENERAL	Category	-	
5	GENERAL	Pipeline Line No	Not Required	
6	GENERAL	Class	D1A, 600#	
7	DESIGN AND TEST REQUIREMENTS	Size	DN 100 (NPS 4")	
8	DESIGN AND TEST REQUIREMENTS	Type of Valve	Rising Stem	
9	DESIGN AND TEST REQUIREMENTS	Type of Port (Full / Reduced)	Refer Material Requistion (Doc. No- C221052-00-PP-MR-2002)	
10	DESIGN AND TEST REQUIREMENTS	Design Temperature (º C) Maximum	65	
11	DESIGN AND TEST REQUIREMENTS	Design Temperature (º C) Minimum	-29	
12	DESIGN AND TEST REQUIREMENTS	Corrosion Allowance (mm)	1.5	
13	DESIGN AND TEST REQUIREMENTS	Installation (Aboveground/Underground)	Refer Material Requistion (MR)	
14	DESIGN AND TEST REQUIREMENTS	Service	Natural Gas (NG)	
15	DESIGN AND TEST REQUIREMENTS	End Connection	Refer Material Requistion (Doc. No- C221052-00-PP-MR-2002)	
16	DESIGN AND TEST REQUIREMENTS	Flange Face Finish	RF/125AARH for Flanged Ends (As applicable)	
17	DESIGN AND TEST REQUIREMENTS	Design Standards	BS 1873	
18	DESIGN AND TEST REQUIREMENTS	End Connection Standard	ANSI B16.5 for Flanged Ends (As applicable)/ ANSI 16.25 for Butt Welded Ends (As applicable)	
19	DESIGN AND TEST REQUIREMENTS	ASME Class	600#	
20	DESIGN AND TEST REQUIREMENTS	Stem Extension Requirement	Required for Under Ground Valves (Refer Material Requistion for AG or UG)	
21	DESIGN AND TEST REQUIREMENTS	Length of Stem Extension	For UG underground valves (Refer MR) , 2.5-3.0 meter from Centerline of pipe (Refer Note-15)	
22	DESIGN AND TEST REQUIREMENTS	Orientation of Stem	Perpendicular to Valve axis	
23	DESIGN AND TEST REQUIREMENTS	Type of Valve Operator	As per Standard Specification	
24	DESIGN AND TEST REQUIREMENTS	Valve Actuator Operating Time	Not Applicable	
25	DESIGN AND TEST REQUIREMENTS	Requirement of Locking Mechanism (LO / LC)	Refer Material Requistion (Doc. No- C221052-00-PP-MR-2002)	
26	DESIGN AND TEST REQUIREMENTS	Length of Pup Piece / Nipple (mm), (If Required) (Note-16) (Integrally welded to the BW valve on each side)	Not Applicable	
27	DESIGN AND TEST REQUIREMENTS	Pup Piece Size / Material Grade / Schdeule/ Thickness (Note-16)	Not Applicable	
28	DESIGN AND TEST REQUIREMENTS	Operator Specification No.	Not Applicable	
29	DESIGN AND TEST REQUIREMENTS	Valve Design Pressure (barg)	90.22	
30	DESIGN AND TEST REQUIREMENTS	Hydrostatic Test Pressure (barg) & Time	Body :135.33 barg & Test Duration as per code	Seat : 99.24 barg & Test Duration as per code
31	DESIGN AND TEST REQUIREMENTS	Pneumatic Test Pressure (barg) & Time	7.0 barg & Test Duration as per code	
32	DESIGN AND TEST REQUIREMENTS	Charpy Impact Test (º C)	Yes (at -29 °C)	
33	DESIGN AND TEST REQUIREMENTS	Fire Safe Design (Note-24)	API 6FA / ISO10497	
34	DESIGN AND TEST REQUIREMENTS	Anti Static Testing Requirement	As per BS-1873 Latest Edition	
35	DESIGN AND TEST REQUIREMENTS	Hardness Test	248 HV10 max	
36	DESIGN AND TEST REQUIREMENTS	Painting (Note-17)	As per specification (Suitable for Industrial Corrosive Environment)	
37	DESIGN AND TEST REQUIREMENTS	Operator Data Sheet No.	Not Applicable	
38	PROCESS DATA (Applicable for Actuator)	Flow (Min/Nor/Max) (m^3/hr)	Not Applicable	
39	PROCESS DATA (Applicable for Actuator)	Pressure (Min/Nor/Max) (barg)	Not Applicable	
40	PROCESS DATA (Applicable for Actuator)	Temperature (Min/Nor/Max) (º C)	Not Applicable	
41	PROCESS DATA (Applicable for Actuator)	Max Shutoff DP (barg)	Not Applicable	
42	PROCESS DATA (Applicable for Actuator)	Viscosity (cP)	Not Applicable	
43	PROCESS DATA (Applicable for Actuator)	Density (Kg/m^3)	Not Applicable	
44	PROCESS DATA (Applicable for Actuator)	Mol . Wt	Not Applicable	
45	PROCESS DATA (Applicable for Actuator)	Sp Heat Ratio (Cp/Cv)	Not Applicable	
46	PROCESS DATA (Applicable for Actuator)	Compressibility (Z)	Not Applicable	
47	PROCESS DATA (Applicable for Actuator)	Ambient Temperature	Not Applicable	
48	CONNECTING PIPE DETAIL	Outside Diameter (Inch)	Size 4"	
49	CONNECTING PIPE DETAIL	Thickness (mm) / Schedule	As per Piping Material Specification	
50	CONNECTING PIPE DETAIL	Pipe Material	As per Piping Material Specification	
51	CONNECTING PIPE DETAIL	Design Code	ASME B31.8	
52	CONNECTING PIPE DETAIL	ASME Rating	600#	
53	CONNECTING PIPE DETAIL	Piping Class	D1A, 600#	
54	CONNECTING PIPE DETAIL	Orientation of Pipe	Suitable for all orientation	

ENERGISING QUALITY / IGGL	CLIENT : INDRADHANUSH GAS GRID LIMITED		JOB NO : C221052
	PROJECT : NORTH EAST GAS GRID PHASE-III OF IGGL		DOC. NO.: C221052-00-PP-DS-2002F
	DATA SHEET OF FE/BW, ABOVEGROUND/UNDERGROUND, GLOBE VALVE DN 100 (NPS 4") Rating 600#, D1A	No. of Pages : 02	Revision: C1 (26.05.2022), D1 (30.06.2022)

Location	NAGALAND, MANIPUR, WEST BENGAL, SIKKIM - INDIA	MR No.	C221052-00-PP-MR-2002
SR.NO	C221052-DIPL-PC-PID-1001 TO 1013 & C221052-SGPL-PC-PID-1001 TO 1011	P.O No.	#

		Part Description	Material Specified	Material Offered (By Bidder)
55	VALVE MATERIAL	Part Description	Material Specified	Material Offered (By Bidder)
56		Body	ASTM A216 GR. WCB/ASTM 105	
57		Bonnet	ASTM A216 GR. WCB/ASTM 105	
58		Disc	STELLITED-6	
59		Seat Ring	STELLITED-6	
60		Stem	13% Cr. Steel (No Casting)	
61		Gland/ Stem Packing	Graphited Asbestos with Sacrificial Corrosion Inhibitor & Inconel Wire Reinforcement	
62		Body Stud	ASTM A 193 Gr. B7	
63		Body Nut	ASTM A 194 Gr. 2H	
66		Handle / Lever / Hand Wheel	Carbon Steel	

67	DATA TO BE PROVIDE BY VENDOR (if Applicable)	Valve Model No.		*
68		Flow Coefficient, Kv (Cubic Meters per Hour)		*
69		Valve Cavity Volume(CC)	Open position	*
70			Closed position	*
71		Operator Manufacturer / Model No.		*
72		Break-away Torque Under Max. Diff Pressure(Nm)		*
73		Running Torque (Open - Close/Close - Open) (Nm)		*

74	NOTES	**NOTES:**
75		1. This Data Sheet shall be read in conjunction with Tender Documents & Specifications.
76		2. Dimension / Input Data as & where marked " * " shall be supplied by Vendor.
77		3.All tests shall be carried out as per BS 1873 & BSEN 12266 part-1.
78		4. Gland packing assembly shall permit repair of gland packing under full line pressure.
79		5. Valve design shall ensure repair of stem seals / packing under full line pressure.
80		6. 100.0 % Valve castings shall undergo Radiographic Examination.
81		7. Valves shall have support foot & lifting lugs as per valve Specification.
82		8. Valve design shall ensure repair of stem seals / packing under full line pressure.
83		9. Wrench operated valves shall be supplied with wrench.
84		10. The Charpy Impact temperature shall be -29°C as specified in data sheet and it shall superceded the Specification (VPC-SS-PP-2004) requirement at 0°C
85		11. Design of Welded Valves shall be such that during field welding operation, the soft or plastic components of valve are not liable to be damages.
86		12. Gasket Material Graphite Shall Be Provided With Corrosion Inhibitor.
87		13. Valve wall thickness shall be as per ANSI B16.34.
88		14 .For the valves to be installed underground the external surfaces of buried portion of the valve shall be painted with 100% Solid high build epoxy (Powercrete R-95) with a minimum dry film thickness of 1000 microns or 1.5 mm thick polyurethane coating
89		15. Stem extension length shall be finalized during drawing approval stage after award of order.
90		16.For the valves to be installed underground the external surfaces of buried portion of the valve shall be painted with 100% Solid high build epoxy(Powercrete R-95) with a minimum dry film thickness of 1000 microns or 1.5 mm thick polyurethane coating
91		17. Minimum all pressure containing and controlling parts of the valve shall be provided with EN 10204-3.2 certificate.

Energising Quality VCS Quality Services Pvt. Ltd.	PROJECT NUMBER: C221052			IGGL	
PROCESS DATASHEET FOR GOOV VALVES				Total Sheets	7
Document no.	**C221052**	**DIPL**	**PC**	**DS**	**1001**

INDRADHANUSH GAS GRID LIMITED

NORTH EAST GAS GRID PHASE-III OF IGGL

C1	30.05.2022	Issued for Client Review	KT	AD	SKP
REV	**DATE**	**DESCRIPTION**	**PREP**	**CHKD**	**APPR**

IGGL Energising Quality	**CLIENT : Indradhanush Gas Grid Limited**	**JOB. NO. C211052**
	PROJECT : North East Gas Grid Phase - III of IGGL	**C221052-DIPL-PC-DS-1001**
	PROCESS DATA SHEET FOR GOOV VALVES (NATURAL GAS PIPELINE SYSTEM)	**Sh 2 of 7** — **Rev** **C1**

	Tag No.	Unit	GOOV-3401			GOOV-3402			GOOV-3501		
GENERAL	P&ID Reference	-	C221052-DIPL-PC-PID-1001			C221052-DIPL-PC-PID-1001			C221052-DIPL-PC-PID-1002		
	Line Designation	-	12"-P-34-3411-D1A			12"-P-34-3416-X70			12"-P-34-3415-X70		
	Location	-	Dispatch terminal at Dimapur			Dispatch terminal at Dimapur			SV/DIPL/01 STATION		
FLUID DATA	Fluid Name, phase at WP/WT	-	Natural Gas, Gaseous			Natural Gas, Gaseous			Natural Gas, Gaseous		
	Erosive/Corrosive/Flammable/Toxic	-	- / -/ Yes / -			- / -/ Yes / -			- / -/ Yes / -		
	Specific Gravity :	-	0.562			0.562			0.562		
	Viscosity at WP/WT	cP	0.00184			0.00184			0.00184		
	Vapour fraction (mass)	-	1.00			1.00			1.00		
OPERATING / DESIGN DATA	Flow rate, Design	MMSCMD	0.07 - 0.15			0.07 - 0.15			0.07 - 0.15		
	Allowable DP at above flow rate	kg/cm^2	-			-			-		
	Pressure, Inlet / Shutoff / Design	kg/cm^2g	37	92	92	37	92	92	37	92	92
	Temp., Inlet / Shutoff / Design	° C	25 - 50	-29 / 65	-29 / 65	25 - 50	-29 / 65	-29 / 65	25 - 50	-29 / 65	-29 / 65
	Shutoff pressure direction (forward/reverse)	-	-			-			-		
	Closing time	sec	By Instrumentation			By Instrumentation			By Instrumentation		
	Failure position	-	Fail Last			Fail Last			Fail Last		
	Handwheel (override) required or not	-	Yes			Yes			Yes (Note-3)		
	Leakage rate/class	-	By Instrumentation			By Instrumentation			By Instrumentation		
	Fire safety required or not	-	Yes			Yes			Yes		
	Design for : offshore, refinery, IBR, etc.	-	Onshore			Onshore			Onshore		
	Actuator principle (Solenoid/Motor/Pneum.)	-	Gas Over Oil Actuated			Gas Over Oil Actuated			Gas Over Oil Actuated		
	Position switches required for open/closed/both	-	Both			Both			Both		
	Hazardous Area Classification & Enclosure	-	By Instrumentation			By Instrumentation			By Instrumentation		
	Type of valve e.g. ball, gate, etc..	-	Ball			Ball			Ball		
	Line size valve required or not	Yes/No	Yes			Yes			Yes		
	Full bore/ Reduced bore	-	Reduced bore			Full bore			Full bore		
	Pipe class/rating/Basic MOC	-	D1A / 600# / CS (Note-2)			X70 / - / CS (Note-2)			X70 / - / CS (Note-2)		
	Installation Type	-	Above ground			Above ground			Under ground		

REV	REVISION DESCRIPTION	DATE	PREP	CHKD	APPD
C1	Issued for Client Review	30.05.2022	KT	AD	SKP

NOTES

1. All instruments tag number shall be prefixed as project code and area code "C221052-DIPL".
2. Basic MOC given is of the line. Suitable MOC for Instruement shall be selected by Instrumentation.
3. Valve shall have rising stem.

IGGL Energising Quality	**CLIENT : Indradhanush Gas Grid Limited**	**JOB. NO. C211052**
	PROJECT : North East Gas Grid Phase - III of IGGL	**C221052-DIPL-PC-DS-1001**
	PROCESS DATA SHEET FOR GOOV VALVES (NATURAL GAS PIPELINE SYSTEM)	**Sh 3 of 7** — **Rev** **C1**

	Tag No.	Unit	GOOV-3601			GOOV-3701			GOOV-3801		
GENERAL	P&ID Reference	-	C221052-DIPL-PC-PID-1003			C221052-DIPL-PC-PID-1004			C221052-DIPL-PC-PID-1005		
	Line Designation	-	12"-P-35-3503-X70			12"-P-36-3607-X70			12"-P-37-3706-X70		
	Location	-	SV/DIPL/02 STATION			SV/DIPL/03 STATION			SV/DIPL/04 STATION		
FLUID DATA	Fluid Name, phase at WP/WT	-	Natural Gas, Gaseous			Natural Gas, Gaseous			Natural Gas, Gaseous		
	Erosive/corrosive/flammable/toxic	-	- / -/ Yes / -			- / -/ Yes / -			- / -/ Yes / -		
	Density : liquid / gas / vapour	-	0.562			0.562			0.562		
	Liquid viscosity at WP/WT	cP	0.00184			0.00184			0.00184		
	Vapour fraction (mass)	-	1.00			1.00			1.00		
OPERATING / DESIGN DATA	Flow rate, Design	MMSCMD	0.07 - 0.15			0.07 - 0.15			0.07 - 0.15		
	Allowable DP at above flow rate	kg/cm^2	-			-			-		
	Pressure, Inlet / Shutoff / Design	kg/cm^2g	37	92	92	37	92	92	37	92	92
	Temp., Inlet / Shutoff / Design	° C	25 - 50	-29 / 65	-29 / 65	25 - 50	-29 / 65	-29 / 65	25 - 50	-29 / 65	-29 / 65
	Shutoff pressure direction (forward/reverse)	-	-			-			-		
	Closing time	sec	By Instrumentation			By Instrumentation			By Instrumentation		
	Failure position	-	Fail Last			Fail Last			Fail Last		
	Handwheel (override) required or not	-	Yes (Note-3)			Yes (Note-3)			Yes (Note-3)		
	Leakage rate/class	-	By Instrumentation			By Instrumentation			By Instrumentation		
	Fire safety required or not	-	Yes			Yes			Yes		
	Design for : offshore, refinery, IBR, etc.	-	Onshore			Onshore			Onshore		
	Actuator principle (Solenoid/Motor/Pneum.)	-	Gas Over Oil Actuated			Gas Over Oil Actuated			Gas Over Oil Actuated		
	Position switches required for open/closed/both	-	Both			Both			Both		
	Hazardous Area Classification & Enclosure	-	By Instrumentation			By Instrumentation			By Instrumentation		
	Type of valve e.g. ball, gate, etc..	-	Ball			Ball			Ball		
	Line size valve required or not	Yes/No	Yes			Yes			Yes		
	Full bore/ Reduced bore	-	Full bore			Full bore			Full bore		
	Pipe class/rating/Basic MOC	-	X70 / - / CS (Note-2)			X70 / - / CS (Note-2)			X70 / - / CS (Note-2)		
	Installation Type	-	Under ground			Under ground			Under ground		

REV	REVISION DESCRIPTION	DATE	PREP	CHKD	APPD
C1	Issued for Client Review	30.05.2022	KT	AD	SKP

NOTES

1. All instruments tag number shall be prefixed as project code and area code "C221052-DIPL".
2. Basic MOC given is of the line. Suitable MOC for Instruement shall be selected by Instrumentation.
3. Valve shall have rising stem.

IGGL Energising Quality	**CLIENT : Indradhanush Gas Grid Limited**	**JOB. NO. C211052**
	PROJECT : North East Gas Grid Phase - III of IGGL	**C221052-DIPL-PC-DS-1001**
	PROCESS DATA SHEET FOR GOOV VALVES (NATURAL GAS PIPELINE SYSTEM)	**Sh 4 of 7** — **Rev** **C1**

	Tag No.	Unit	GOOV-3901			GOOV-4001			GOOV-4101		
GENERAL	P&ID Reference	-	C221052-DIPL-PC-PID-1006			C221052-DIPL-PC-PID-1007			C221052-DIPL-PC-PID-1008		
	Line Designation	-	12"-P-38-3804-X70			12"-P-39-3908-X70			12"-P-41-4108-X70		
	Location	-	SV/DIPL/05 STATION			SV/DIPL/06 STATION			IP STATION AT TADUBI		
FLUID DATA	Fluid Name, phase at WP/WT	-	Natural Gas, Gaseous			Natural Gas, Gaseous			Natural Gas, Gaseous		
	Erosive/corrosive/flammable/toxic	-	- / -/ Yes / -			- / -/ Yes / -			- / -/ Yes / -		
	Density : liquid / gas / vapour	-	0.562			0.562			0.562		
	Liquid viscosity at WP/WT	cP	0.00184			0.00184			0.00184		
	Vapour fraction (mass)	-	1.00			1.00			1.00		
OPERATING / DESIGN DATA	Flow rate, Design	MMSCMD	0.07 - 0.15			0.07 - 0.15			0.07 - 0.15		
	Allowable DP at above flow rate	kg/cm^2	-			-			-		
	Pressure, Inlet / Shutoff / Design	kg/cm^2g	37	92	92	37	92	92	37	92	92
	Temp., Inlet / Shutoff / Design	° C	25 - 50	-29 / 65	-29 / 65	25 - 50	-29 / 65	-29 / 65	25 - 50	-29 / 65	-29 / 65
	Shutoff pressure direction (forward/reverse)	-	-			-			-		
	Closing time	sec	By Instrumentation			By Instrumentation			By Instrumentation		
	Failure position	-	Fail Last			Fail Last			Fail Last		
	Handwheel (override) required or not	-	Yes (Note-3)			Yes (Note-3)			Yes		
	Leakage rate/class	-	By Instrumentation			By Instrumentation			By Instrumentation		
	Fire safety required or not	-	Yes			Yes			Yes		
	Design for : offshore, refinery, IBR, etc.	-	Onshore			Onshore			Onshore		
	Actuator principle (Solenoid/Motor/Pneum.)	-	Gas Over Oil Actuated			Gas Over Oil Actuated			Gas Over Oil Actuated		
	Position switches required for open/closed/both	-	Both			Both			Both		
	Hazardous Area Classification & Enclosure	-	By Instrumentation			By Instrumentation			By Instrumentation		
	Type of valve e.g. ball, gate, etc..	-	Ball			Ball			Ball		
	Line size valve required or not	Yes/No	Yes			Yes			Yes		
	Full bore/ Reduced bore	-	Full bore			Full bore			Full bore		
	Pipe class/rating/Basic MOC	-	X70 / - / CS (Note-2)			X70 / - / CS (Note-2)			X70 / - / CS (Note-2)		
	Installation Type	-	Under ground			Under ground			Above ground		

REV	REVISION DESCRIPTION	DATE	PREP	CHKD	APPD
C1	Issued for Client Review	30.05.2022	KT	AD	SKP

NOTES

1. All instruments tag number shall be prefixed as project code and area code "C221052-DIPL".
2. Basic MOC given is of the line. Suitable MOC for Instruement shall be selected by Instrumentation.
3. Valve shall have rising stem.

IGGL Energising Quality	**CLIENT : Indradhanush Gas Grid Limited**	**JOB. NO. C211052**
	PROJECT : North East Gas Grid Phase - III of IGGL	**C221052-DIPL-PC-DS-1001**
	PROCESS DATA SHEET FOR GOOV VALVES (NATURAL GAS PIPELINE SYSTEM)	**Sh 5 of 7** — **Rev** **C1**

	Tag No.	Unit	GOOV-4102			GOOV-4103			GOOV-4104		
GENERAL	P&ID Reference	-	C221052-DIPL-PC-PID-1008			C221052-DIPL-PC-PID-1008			C221052-DIPL-PC-PID-1008		
	Line Designation	-	12"-P-41-4102-D1A			12"-P-41-4115-X70			12"-P-41-4106-D1A		
	Location	-	IP STATION AT TADUBI			IP STATION AT TADUBI			IP STATION AT TADUBI		
FLUID DATA	Fluid Name, phase at WP/WT	-	Natural Gas, Gaseous			Natural Gas, Gaseous			Natural Gas, Gaseous		
	Erosive/corrosive/flammable/toxic	-	- / -/ Yes / -			- / -/ Yes / -			- / -/ Yes / -		
	Density : liquid / gas / vapour	-	0.562			0.562			0.562		
	Liquid viscosity at WP/WT	cP	0.00184			0.00184			0.00184		
	Vapour fraction (mass)	-	1.00			1.00			1.00		
OPERATING / DESIGN DATA	Flow rate, Design	MMSCMD	0.07 - 0.15			0.07 - 0.15			0.07 - 0.15		
	Allowable DP at above flow rate	kg/cm^2	-			-			-		
	Pressure, Inlet / Shutoff / Design	kg/cm^2g	37	92	92	37	92	92	37	92	92
	Temp., Inlet / Shutoff / Design	° C	25 - 50	-29 / 65	-29 / 65	25 - 50	-29 / 65	-29 / 65	25 - 50	-29 / 65	-29 / 65
	Shutoff pressure direction (forward/reverse)	-	-			-			-		
	Closing time	sec	By Instrumentation			By Instrumentation			By Instrumentation		
	Failure position	-	Fail Last			Fail Last			Fail Last		
	Handwheel (override) required or not	-	Yes			Yes			Yes		
	Leakage rate/class	-	By Instrumentation			By Instrumentation			By Instrumentation		
	Fire safety required or not	-	Yes			Yes			Yes		
	Design for : offshore, refinery, IBR, etc.	-	Onshore			Onshore			Onshore		
	Actuator principle (Solenoid/Motor/Pneum.)	-	Gas Over Oil Actuated			Gas Over Oil Actuated			Gas Over Oil Actuated		
	Position switches required for open/closed/both	-	Both			Both			Both		
	Hazardous Area Classification & Enclosure	-	By Instrumentation			By Instrumentation			By Instrumentation		
	Type of valve e.g. ball, gate, etc..	-	Ball			Ball			Ball		
	Line size valve required or not	Yes/No	Yes			Yes			Yes		
	Full bore/ Reduced bore	-	Reduced bore			Full bore			Reduced bore		
	Pipe class/rating/Basic MOC	-	D1A / 600# / CS (Note-2)			X70 / - / CS (Note-2)			D1A / 600# / CS (Note-2)		
	Installation Type	-	Above ground			Above ground			Above ground		

REV	REVISION DESCRIPTION	DATE	PREP	CHKD	APPD
C1	Issued for Client Review	30.05.2022	KT	AD	SKP

NOTES

1. All instruments tag number shall be prefixed as project code and area code "C221052-DIPL".
2. Basic MOC given is of the line. Suitable MOC for Instruement shall be selected by Instrumentation.
3. Valve shall have rising stem.

IGGL Energising Quality	**CLIENT : Indradhanush Gas Grid Limited**	**JOB. NO. C211052**
	PROJECT : North East Gas Grid Phase - III of IGGL	**C221052-DIPL-PC-DS-1001**
	PROCESS DATA SHEET FOR GOOV VALVES (NATURAL GAS PIPELINE SYSTEM)	**Sh 6 of 7** — **Rev** **C1**

	Tag No.	Unit	GOOV-4201			GOOV-4301			GOOV-4401		
GENERAL	P&ID Reference	-	C221052-DIPL-PC-PID-1009			C221052-DIPL-PC-PID-1010			C221052-DIPL-PC-PID-1011		
	Line Designation	-	12"-P-41-4115-X70			12"-P-42-4208-X70			12"-P-43-4308-X70		
	Location	-	SV/DIPL/07 STATION			SV/DIPL/08 STATION			SV/DIPL/09 STATION		
FLUID DATA	Fluid Name, phase at WP/WT	-	Natural Gas, Gaseous			Natural Gas, Gaseous			Natural Gas, Gaseous		
	Erosive/corrosive/flammable/toxic	-	- / -/ Yes / -			- / -/ Yes / -			- / -/ Yes / -		
	Density : liquid / gas / vapour	-	0.562			0.562			0.562		
	Liquid viscosity at WP/WT	cP	0.00184			0.00184			0.00184		
	Vapour fraction (mass)	-	1.00			1.00			1.00		
OPERATING / DESIGN DATA	Flow rate, Design	MMSCMD	0.07 - 0.15			0.07 - 0.15			0.07 - 0.15		
	Allowable DP at above flow rate	kg/cm^2	-			-			-		
	Pressure, Inlet / Shutoff / Design	kg/cm^2g	37	92	92	37	92	92	37	92	92
	Temp., Inlet / Shutoff / Design	° C	25 - 50	-29 / 65	-29 / 65	25 - 50	-29 / 65	-29 / 65	25 - 50	-29 / 65	-29 / 65
	Shutoff pressure direction (forward/reverse)	-	-			-			-		
	Closing time	sec	By Instrumentation			By Instrumentation			By Instrumentation		
	Failure position	-	Fail Last			Fail Last			Fail Last		
	Handwheel (override) required or not	-	Yes (Note-3)			Yes (Note-3)			Yes (Note-3)		
	Leakage rate/class	-	By Instrumentation			By Instrumentation			By Instrumentation		
	Fire safety required or not	-	Yes			Yes			Yes		
	Design for : offshore, refinery, IBR, etc.	-	Onshore			Onshore			Onshore		
	Actuator principle (Solenoid/Motor/Pneum.)	-	Gas Over Oil Actuated			Gas Over Oil Actuated			Gas Over Oil Actuated		
	Position switches required for open/closed/both	-	Both			Both			Both		
	Hazardous Area Classification & Enclosure	-	By Instrumentation			By Instrumentation			By Instrumentation		
	Type of valve e.g. ball, gate, etc..	-	Ball			Ball			Ball		
	Line size valve required or not	Yes/No	Yes			Yes			Yes		
	Full bore/ Reduced bore	-	Full bore			Full bore			Full bore		
	Full bore/ Reduced bore	-	X70 / - / CS (Note-2)			X70 / - / CS (Note-2)			X70 / - / CS (Note-2)		
	Installation Type	-	Under ground			Under ground			Under ground		

REV	REVISION DESCRIPTION	DATE	PREP	CHKD	APPD
C1	Issued for Client Review	30.05.2022	KT	AD	SKP

NOTES

1. All instruments tag number shall be prefixed as project code and area code "C221052-DIPL".
2. Basic MOC given is of the line. Suitable MOC for Instruement shall be selected by
3. Valve shall have rising stem.

IGGL Energising Quality			CLIENT : Indradhanush Gas Grid Limited						JOB. NO. C211052		
			PROJECT : North East Gas Grid Phase - III of IGGL						C221052-DIPL-PC-DS-1001		
			PROCESS DATA SHEET FOR GOOV VALVES (NATURAL GAS PIPELINE SYSTEM)						Sh 7 of 7	Rev C1	
	Tag No.	Unit	GOOV-4501			GOOV-4601			GOOV-4602		
GENERAL	P&ID Reference	-	C221052-DIPL-PC-PID-1012			C221052-DIPL-PC-PID-1013			C221052-DIPL-PC-PID-1013		
	Line Designation	-	12"-P-44-4408-X70			12"-P-45-4505-X70			12"-P-46-4616-D1A		
	Location	-	SV/DIPL/10 STATION			Reciept terminal at Imphal			Reciept terminal at Imphal		
FLUID DATA	Fluid Name, phase at WP/WT	-	Natural Gas, Gaseous			Natural Gas, Gaseous			Natural Gas, Gaseous		
	Erosive/corrosive/flammable/toxic	-	- / -/ Yes / -			- / -/ Yes / -			- / -/ Yes / -		
	Density : liquid / gas / vapour	-	0.562			0.562			0.562		
	Liquid viscosity at WP/WT	cP	0.00184			0.00184			0.00184		
	Vapour fraction (mass)	-	1.00			1.00			1.00		
OPERATING / DESIGN DATA	Flow rate, Design	MMSCMD	0.07 - 0.15			0.07 - 0.15			0.07 - 0.15		
	Allowable DP at above flow rate	kg/cm^2	-			-			-		
	Pressure, Inlet / Shutoff / Design	kg/cm^2g	37	92	92	37	92	92	37	92	92
	Temp., Inlet / Shutoff / Design	° C	25 - 50	-29 / 65	-29 / 65	25 - 50	-29 / 65	-29 / 65	25 - 50	-29 / 65	-29 / 65
	Shutoff pressure direction (forward/reverse)	-	-			-			-		
	Closing time	sec	By Instrumentation			By Instrumentation			By Instrumentation		
	Failure position	-	Fail Last			Fail Last			Fail Last		
	Handwheel (override) required or not	-	Yes (Note-3)			Yes			Yes		
	Leakage rate/class	-	By Instrumentation			By Instrumentation			By Instrumentation		
	Fire safety required or not	-	Yes			Yes			Yes		
	Design for : offshore, refinery, IBR, etc.	-	Onshore			Onshore			Onshore		
	Actuator principle (Solenoid/Motor/Pneum.)	-	Gas Over Oil Actuated			Gas Over Oil Actuated			Gas Over Oil Actuated		
	Position switches required for open/closed/both	-	Both			Both			Both		
	Hazardous Area Classification & Enclosure	-	By Instrumentation			By Instrumentation			By Instrumentation		
	Type of valve e.g. ball, gate, etc..	-	Ball			Ball			Ball		
	Line size valve required or not	Yes/No	Yes			Yes			Yes		
	Full bore/ Reduced bore	-	Full bore			Full bore			Reduced bore		
	Pipe class/rating/Basic MOC	-	X70 / - / CS (Note-2)			X70 / - / CS (Note-2)			D1A / 600# / CS (Note-2)		
	Installation Type	-	Under ground			Above ground			Above ground		

REV	REVISION DESCRIPTION	DATE	PREP	CHKD	APPD
C1	Issued for Client Review	30.05.2022	KT	AD	SKP

NOTES

1. All instruments tag number shall be prefixed as project code and area code "C221052-DIPL".
2. Basic MOC given is of the line. Suitable MOC for Instruement shall be selected by
3. Valve shall have rising stem.

Energising Quality VCS Quality Services Pvt. Ltd.	PROJECT NUMBER: C221052			IGGL	
PROCESS DATASHEET FOR GOOV VALVES				Total Sheets	7
Document no.	C221052	SGPL	PC	DS	1001

INDRADHANUSH GAS GRID LIMITED

NORTH EAST GAS GRID PHASE-III OF IGGL

C1	31.05.2022	Issued for Client Review	KT	AD	SKP
REV	**DATE**	**DESCRIPTION**	**PREP**	**CHKD**	**APPR**

IGGL Energising Quality	**CLIENT : Indradhanush Gas Grid Limited**	**JOB. NO. C211052**
	PROJECT : North East Gas Grid Phase - III of IGGL	**C221052-SGPL-PC-DS-1001**
	PROCESS DATA SHEET FOR GOOV VALVES (NATURAL GAS PIPELINE SYSTEM)	**Sh 2 of 7** — **Rev** **C1**

	Tag No.	Unit	GOOV-1001			GOOV-1002			GOOV-1101		
GENERAL	P&ID Reference	-	C221052-SGPL-PC-PID-1001			C221052-SGPL-PC-PID-1001			C221052-SGPL-PC-PID-1002		
	Line Designation	-	12"-P-10-1001-D1A			12"-P-10-1003-X70			12"-P-10-1003-X70		
	Location	-	Dispatch terminal at Siliguri			Dispatch terminal at Siliguri			SV/SGPL/01 STATION		
FLUID DATA	Fluid Name, phase at WP/WT	-	Natural Gas, Gaseous			Natural Gas, Gaseous			Natural Gas, Gaseous		
	Erosive/Corrosive/Flammable/Toxic	-	- / -/ Yes / -			- / -/ Yes / -			- / -/ Yes / -		
	Specific Gravity :	-	0.562			0.562			0.562		
	Viscosity at WP/WT	cP	0.00184			0.00184			0.00184		
	Vapour fraction (mass)	-	1.00			1.00			1.00		
OPERATING / DESIGN DATA	Flow rate, Design	MMSCMD	0.07			0.07			0.07		
	Allowable DP at above flow rate	kg/cm^2	-			-			-		
	Pressure, Inlet / Shutoff / Design	kg/cm^2g	30	92	92	30	92	92	30	92	92
	Temp., Inlet / Shutoff / Design	° C	25 - 50	-29 / 65	-29 / 65	25 - 50	-29 / 65	-29 / 65	25 - 50	-29 / 65	-29 / 65
	Shutoff pressure direction (forward/reverse)	-	-			-			-		
	Closing time	sec	By Instrumentation			By Instrumentation			By Instrumentation		
	Failure position	-	Fail Last			Fail Last			Fail Last		
	Handwheel (override) required or not	-	Yes			Yes			Yes (Note-3)		
	Leakage rate/class	-	By Instrumentation			By Instrumentation			By Instrumentation		
	Fire safety required or not	-	Yes			Yes			Yes		
	Design for : offshore, refinery, IBR, etc.	-	Onshore			Onshore			Onshore		
	Actuator principle (Solenoid/Motor/Pneum.)	-	Gas Over Oil Actuated			Gas Over Oil Actuated			Gas Over Oil Actuated		
	Position switches required for open/closed/both	-	Both			Both			Both		
	Hazardous Area Classification & Enclosure	-	By Instrumentation			By Instrumentation			By Instrumentation		
	Type of valve e.g. ball, gate, etc..	-	Ball			Ball			Ball		
	Line size valve required or not	Yes/No	Yes			Yes			Yes		
	Full bore/ Reduced bore	-	Reduced bore			Full bore			Full bore		
	Pipe class/rating/Basic MOC	-	D1A / 600# / CS (Note-2)			X70 / - / CS (Note-2)			X70 / - / CS (Note-2)		
	Installation Type	-	Above ground			Above ground			Under ground		

REV	REVISION DESCRIPTION	DATE	PREP	CHKD	APPD
C1	Issued for Client Review	31.05.2022	KT	AD	SKP

NOTES

1. All instruments tag number shall be prefixed as project code and area code "C221052-SGPL".
2. Basic MOC given is of the line. Suitable MOC for Instruement shall be selected by Instrumentation.
3. Valve shall have rising stem.

IGGL Energising Quality	**CLIENT : Indradhanush Gas Grid Limited**	**JOB. NO. C211052**
	PROJECT : North East Gas Grid Phase - III of IGGL	**C221052-SGPL-PC-DS-1001**
	PROCESS DATA SHEET FOR GOOV VALVES (NATURAL GAS PIPELINE SYSTEM)	**Sh 3 of 7** — **Rev** **C1**

	Tag No.	Unit	GOOV-1201			GOOV-1301			GOOV-1401		
GENERAL	P&ID Reference	-	C221052-SGPL-PC-PID-1003			C221052-SGPL-PC-PID-1004			C221052-SGPL-PC-PID-1005		
	Line Designation	-	12"-P-11-1108-X70			12"-P-12-1208-X70			12"-P-13-1308-X70		
	Location	-	SV/SGPL/02 STATION			SV/SGPL/03 STATION			SV/SGPL/04 STATION		
FLUID DATA	Fluid Name, phase at WP/WT	-	Natural Gas, Gaseous			Natural Gas, Gaseous			Natural Gas, Gaseous		
	Erosive/corrosive/flammable/toxic	-	- / -/ Yes / -			- / -/ Yes / -			- / -/ Yes / -		
	Density : liquid / gas / vapour	-	0.562			0.562			0.562		
	Liquid viscosity at WP/WT	cP	0.00184			0.00184			0.00184		
	Vapour fraction (mass)	-	1.00			1.00			1.00		
OPERATING / DESIGN DATA	Flow rate, Design	MMSCMD	0.07			0.07			0.07		
	Allowable DP at above flow rate	kg/cm^2	-			-			-		
	Pressure, Inlet / Shutoff / Design	kg/cm^2g	30	92	92	30	92	92	30	92	92
	Temp., Inlet / Shutoff / Design	° C	25 - 50	-29 / 65	-29 / 65	25 - 50	-29 / 65	-29 / 65	25 - 50	-29 / 65	-29 / 65
	Shutoff pressure direction (forward/reverse)	-	-			-			-		
	Closing time	sec	By Instrumentation			By Instrumentation			By Instrumentation		
	Failure position	-	Fail Last			Fail Last			Fail Last		
	Handwheel (override) required or not	-	Yes (Note-3)			Yes (Note-3)			Yes (Note-3)		
	Leakage rate/class	-	By Instrumentation			By Instrumentation			By Instrumentation		
	Fire safety required or not	-	Yes			Yes			Yes		
	Design for : offshore, refinery, IBR, etc.	-	Onshore			Onshore			Onshore		
	Actuator principle (Solenoid/Motor/Pneum.)	-	Gas Over Oil Actuated			Gas Over Oil Actuated			Gas Over Oil Actuated		
	Position switches required for open/closed/both	-	Both			Both			Both		
	Hazardous Area Classification & Enclosure	-	By Instrumentation			By Instrumentation			By Instrumentation		
	Type of valve e.g. ball, gate, etc..	-	Ball			Ball			Ball		
	Line size valve required or not	Yes/No	Yes			Yes			Yes		
	Full bore/ Reduced bore	-	Full bore			Full bore			Full bore		
	Pipe class/rating/Basic MOC	-	X70 / - / CS (Note-2)			X70 / - / CS (Note-2)			X70 / - / CS (Note-2)		
	Installation Type	-	Under ground			Under ground			Under ground		

REV	REVISION DESCRIPTION	DATE	PREP	CHKD	APPD
C1	Issued for Client Review	31.05.2022	KT	AD	SKP

NOTES

1. All instruments tag number shall be prefixed as project code and area code "C221052-SGPL".
2. Basic MOC given is of the line. Suitable MOC for Instruement shall be selected by Instrumentation.
3. Valve shall have rising stem.

IGGL Energising Quality	**CLIENT : Indradhanush Gas Grid Limited**	**JOB. NO. C211052**
	PROJECT : North East Gas Grid Phase - III of IGGL	**C221052-SGPL-PC-DS-1001**
	PROCESS DATA SHEET FOR GOOV VALVES (NATURAL GAS PIPELINE SYSTEM)	**Sh 4 of 7** — **Rev** **C1**

	Tag No.	Unit	GOOV-1501			GOOV-1601			GOOV-1602		
GENERAL	P&ID Reference	-	C221052-SGPL-PC-PID-1006			C221052-SGPL-PC-PID-1007			C221052-SGPL-PC-PID-1007		
	Line Designation	-	12"-P-14-1408-X70			12"-P-16-1623-X70			12"-P-16-1637-X70		
	Location	-	SV/DIPL/05 STATION			IP STATION AT LAVA			IP STATION AT LAVA		
FLUID DATA	Fluid Name, phase at WP/WT	-	Natural Gas, Gaseous			Natural Gas, Gaseous			Natural Gas, Gaseous		
	Erosive/corrosive/flammable/toxic	-	- / -/ Yes / -			- / -/ Yes / -			- / -/ Yes / -		
	Density : liquid / gas / vapour	-	0.562			0.562			0.562		
	Liquid viscosity at WP/WT	cP	0.00184			0.00184			0.00184		
	Vapour fraction (mass)	-	1.00			1.00			1.00		
OPERATING / DESIGN DATA	Flow rate, Design	MMSCMD	0.07			0.07			0.07		
	Allowable DP at above flow rate	kg/cm^2	-			-			-		
	Pressure, Inlet / Shutoff / Design	kg/cm^2g	30	92	92	30	92	92	30	92	92
	Temp., Inlet / Shutoff / Design	° C	25 - 50	-29 / 65	-29 / 65	25 - 50	-29 / 65	-29 / 65	25 - 50	-29 / 65	-29 / 65
	Shutoff pressure direction (forward/reverse)	-	-			-			-		
	Closing time	sec	By Instrumentation			By Instrumentation			By Instrumentation		
	Failure position	-	Fail Last			Fail Last			Fail Last		
	Handwheel (override) required or not	-	Yes (Note-3)			Yes			Yes		
	Leakage rate/class	-	By Instrumentation			By Instrumentation			By Instrumentation		
	Fire safety required or not	-	Yes			Yes			Yes		
	Design for : offshore, refinery, IBR, etc.	-	Onshore			Onshore			Onshore		
	Actuator principle (Solenoid/Motor/Pneum.)	-	Gas Over Oil Actuated			Gas Over Oil Actuated			Gas Over Oil Actuated		
	Position switches required for open/closed/both	-	Both			Both			Both		
	Hazardous Area Classification & Enclosure	-	By Instrumentation			By Instrumentation			By Instrumentation		
	Type of valve e.g. ball, gate, etc..	-	Ball			Ball			Ball		
	Line size valve required or not	Yes/No	Yes			Yes			Yes		
	Full bore/ Reduced bore	-	Full bore			Full bore			Full bore		
	Pipe class/rating/Basic MOC	-	X70 / - / CS (Note-2)			X70 / - / CS (Note-2)			X70 / - / CS (Note-2)		
	Installation Type	-	Under ground			Above ground			Above ground		

REV	REVISION DESCRIPTION	DATE	PREP	CHKD	APPD
C1	Issued for Client Review	31.05.2022	KT	AD	SKP

NOTES

1. All instruments tag number shall be prefixed as project code and area code "C221052-SGPL".
2. Basic MOC given is of the line. Suitable MOC for Instruement shall be selected by Instrumentation.
3. Valve shall have rising stem.

IGGL Energising Quality	**CLIENT : Indradhanush Gas Grid Limited**	**JOB. NO. C211052**
	PROJECT : North East Gas Grid Phase - III of IGGL	**C221052-SGPL-PC-DS-1001**
	PROCESS DATA SHEET FOR GOOV VALVES (NATURAL GAS PIPELINE SYSTEM)	**Sh 5 of 7** — **Rev** **C1**

	Tag No.	Unit	GOOV-1603			GOOV-1604			GOOV-1701		
GENERAL	P&ID Reference	-	C221052-SGPL-PC-PID-1007			C221052-SGPL-PC-PID-1007			C221052-SGPL-PC-PID-1008		
	Line Designation	-	12"-P-16-1629-D1A			12"-P-16-1615-D1A			12"-P-16-1637-X70		
	Location	-	IP STATION AT LAVA			IP STATION AT LAVA			SV/SGPL/06 STATION		
FLUID DATA	Fluid Name, phase at WP/WT	-	Natural Gas, Gaseous			Natural Gas, Gaseous			Natural Gas, Gaseous		
	Erosive/corrosive/flammable/toxic	-	- / -/ Yes / -			- / -/ Yes / -			- / -/ Yes / -		
	Density : liquid / gas / vapour	-	0.562			0.562			0.562		
	Liquid viscosity at WP/WT	cP	0.00184			0.00184			0.00184		
	Vapour fraction (mass)	-	1.00			1.00			1.00		
OPERATING / DESIGN DATA	Flow rate, Design	MMSCMD	0.07			0.07			0.07		
	Allowable DP at above flow rate	kg/cm^2	-			-			-		
	Pressure, Inlet / Shutoff / Design	kg/cm^2g	30	92	92	30	92	92	30	92	92
	Temp., Inlet / Shutoff / Design	° C	25 - 50	-29 / 65	-29 / 65	25 - 50	-29 / 65	-29 / 65	25 - 50	-29 / 65	-29 / 65
	Shutoff pressure direction (forward/reverse)	-	-			-			-		
	Closing time	sec	By Instrumentation			By Instrumentation			By Instrumentation		
	Failure position	-	Fail Last			Fail Last			Fail Last		
	Handwheel (override) required or not	-	Yes			Yes			Yes (Note-3)		
	Leakage rate/class	-	By Instrumentation			By Instrumentation			By Instrumentation		
	Fire safety required or not	-	Yes			Yes			Yes		
	Design for : offshore, refinery, IBR, etc.	-	Onshore			Onshore			Onshore		
	Actuator principle (Solenoid/Motor/Pneum.)	-	Gas Over Oil Actuated			Gas Over Oil Actuated			Gas Over Oil Actuated		
	Position switches required for open/closed/both	-	Both			Both			Both		
	Hazardous Area Classification & Enclosure	-	By Instrumentation			By Instrumentation			By Instrumentation		
	Type of valve e.g. ball, gate, etc..	-	Ball			Ball			Ball		
	Line size valve required or not	Yes/No	Yes			Yes			Yes		
	Full bore/ Reduced bore	-	Reduced bore			Reduced bore			Full bore		
	Pipe class/rating/Basic MOC	-	D1A / 600# / CS (Note-2)			D1A / 600# / CS (Note-2)			X70 / - / CS (Note-2)		
	Installation Type	-	Above ground			Above ground			Under ground		

REV	REVISION DESCRIPTION	DATE	PREP	CHKD	APPD
C1	Issued for Client Review	31.05.2022	KT	AD	SKP

NOTES

1. All instruments tag number shall be prefixed as project code and area code "C221052-SGPL".
2. Basic MOC given is of the line. Suitable MOC for Instruement shall be selected by Instrumentation.
3. Valve shall have rising stem.

IGGL Energising Quality	**CLIENT : Indradhanush Gas Grid Limited**	**JOB. NO. C211052**
	PROJECT : North East Gas Grid Phase - III of IGGL	**C221052-SGPL-PC-DS-1001**
	PROCESS DATA SHEET FOR GOOV VALVES (NATURAL GAS PIPELINE SYSTEM)	**Sh 6 of 7** — **Rev** **C1**

	Tag No.	Unit	GOOV-1801			GOOV-1901			GOOV-2001		
GENERAL	P&ID Reference	-	C221052-SGPL-PC-PID-1009			C221052-SGPL-PC-PID-1010			C221052-SGPL-PC-PID-1011		
	Line Designation	-	12"-P-17-1708-X70			12"-P-18-1808-X70			12"-P-19-1908-X70		
	Location	-	SV/SGPL/07 STATION			SV/SGPL/08 STATION			Reciept terminal at Gangtok		
FLUID DATA	Fluid Name, phase at WP/WT	-	Natural Gas, Gaseous			Natural Gas, Gaseous			Natural Gas, Gaseous		
	Erosive/corrosive/flammable/toxic	-	- / -/ Yes / -			- / -/ Yes / -			- / -/ Yes / -		
	Density : liquid / gas / vapour	-	0.562			0.562			0.562		
	Liquid viscosity at WP/WT	cP	0.00184			0.00184			0.00184		
	Vapour fraction (mass)	-	1.00			1.00			1.00		
OPERATING / DESIGN DATA	Flow rate, Design	MMSCMD	0.07 - 0.15			0.07 - 0.15			0.07 - 0.15		
	Allowable DP at above flow rate	kg/cm^2	-			-			-		
	Pressure, Inlet / Shutoff / Design	kg/cm^2g	37	92	92	37	92	92	37	92	92
	Temp., Inlet / Shutoff / Design	° C	25 - 50	-29 / 65	-29 / 65	25 - 50	-29 / 65	-29 / 65	25 - 50	-29 / 65	-29 / 65
	Shutoff pressure direction (forward/reverse)	-	-			-			-		
	Closing time	sec	By Instrumentation			By Instrumentation			By Instrumentation		
	Failure position	-	Fail Last			Fail Last			Fail Last		
	Handwheel (override) required or not	-	Yes (Note-3)			Yes (Note-3)			Yes		
	Leakage rate/class	-	By Instrumentation			By Instrumentation			By Instrumentation		
	Fire safety required or not	-	Yes			Yes			Yes		
	Design for : offshore, refinery, IBR, etc.	-	Onshore			Onshore			Onshore		
	Actuator principle (Solenoid/Motor/Pneum.)	-	Gas Over Oil Actuated			Gas Over Oil Actuated			Gas Over Oil Actuated		
	Position switches required for open/closed/both	-	Both			Both			Both		
	Hazardous Area Classification & Enclosure	-	By Instrumentation			By Instrumentation			By Instrumentation		
	Type of valve e.g. ball, gate, etc..	-	Ball			Ball			Ball		
	Line size valve required or not	Yes/No	Yes			Yes			Yes		
	Full bore/ Reduced bore	-	Full bore			Full bore			Full bore		
	Full bore/ Reduced bore	-	X70 / - / CS (Note-2)			X70 / - / CS (Note-2)			X70 / - / CS (Note-2)		
	Installation Type	-	Under ground			Under ground			Above ground		

REV	REVISION DESCRIPTION	DATE	PREP	CHKD	APPD
C1	Issued for Client Review	31.05.2022	KT	AD	SKP

NOTES

1. All instruments tag number shall be prefixed as project code and area code "C221052-SGPL".
2. Basic MOC given is of the line. Suitable MOC for Instruement shall be selected by
3. Valve shall have rising stem.

IGGL Energising Quality	**CLIENT : Indradhanush Gas Grid Limited**	**JOB. NO. C211052**
	PROJECT : North East Gas Grid Phase - III of IGGL	**C221052-SGPL-PC-DS-1001**
	PROCESS DATA SHEET FOR GOOV VALVES (NATURAL GAS PIPELINE SYSTEM)	**Sh 7 of 7** — **Rev** **C1**

	Tag No.	Unit	GOOV-2002		
GENERAL	P&ID Reference	-	C221052-SGPL-PC-PID-1011		
	Line Designation	-	12"-P-20-2002-D1A		
	Location	-	Reciept terminal at Gangtok		
FLUID DATA	Fluid Name, phase at WP/WT	-	Natural Gas, Gaseous		
	Erosive/corrosive/flammable/toxic	-	- / -/ Yes / -		
	Density : liquid / gas / vapour	-	0.562		
	Liquid viscosity at WP/WT	cP	0.00184		
	Vapour fraction (mass)	-	1.00		
OPERATING / DESIGN DATA	Flow rate, Design	MMSCMD	0.07		
	Allowable DP at above flow rate	kg/cm^2	-		
	Pressure, Inlet / Shutoff / Design	kg/cm^2g	30	92	92
	Temp., Inlet / Shutoff / Design	° C	25 - 50	-29 / 65	-29 / 65
	Shutoff pressure direction (forward/reverse)	-	-		
	Closing time	sec	By Instrumentation		
	Failure position	-	Fail Last		
	Handwheel (override) required or not	-	Yes		
	Leakage rate/class	-	By Instrumentation		
	Fire safety required or not	-	Yes		
	Design for : offshore, refinery, IBR, etc.	-	Onshore		
	Actuator principle (Solenoid/Motor/Pneum.)	-	Gas Over Oil Actuated		
	Position switches required for open/closed/both	-	Both		
	Hazardous Area Classification & Enclosure	-	By Instrumentation		
	Type of valve e.g. ball, gate, etc..	-	Ball		
	Line size valve required or not	Yes/No	Yes		
	Full bore/ Reduced bore	-	Reduced bore		
	Pipe class/rating/Basic MOC	-	D1A / 600# / CS (Note-2)		
	Installation Type	-	Above ground		

REV	REVISION DESCRIPTION	DATE	PREP	CHKD	APPD
C1	Issued for Client Review	31.05.2022	KT	AD	SKP

NOTES

1. All instruments tag number shall be prefixed as project code and area code "C221052-SGPL".
2. Basic MOC given is of the line. Suitable MOC for Instruement shall be selected by

Energising Quality	PROJECT NUMBER:C221052			IGGL	
Datasheet for Gas Over Oil Actuator				Total Sheets	02
Document no.	C221052	00	IN	DS	5002

Indradhanush Gas Grid Limited

NORTH EAST GAS GRID PHASE-III OF IGGL

C1	11.05.2022	Issued for Client Review	VK	DGM	KNC
B1	04.05.2022	Issued for IDC	VK	SV	KNC
A1	02.05.2022	Issued for Internal Review	VK	SV	KNC
REV	**DATE**	**DESCRIPTION**	**PREP**	**CHKD**	**APPR**

DATA SHEET : GAS OVER OIL ACTUATOR						Rev.
GENERAL	1	Tag Number	Qty.	Refer P&IDs	Refer MR/SOR	
	2	Line Number		Refer P&IDs		
	3	Line size & Schedule		12" & 600#		
	4	Service		Natural Gas		
	5	P&ID No. / Schematic Diagram No.		C221052-DIPL-PC-PID-1001 to 1013	C221052-SGPL-PC-PID-1001 to 1011	
	6	Area Classification		Zone 1 Group IIA /IIB as per IEC, T3		
ACTUATOR	7	Type		Gas Over Oil Actuator		
	8	Min. Gas pressure for actuator sizing		Refer Process datasheet/P&ID		
	9	Supply pressure: Min/Nor/Max.				
	10	Shutoff pressure				
	11	Tubing material		SS 316		
	12	Tubing size: Pneumatic/Hydraulic		1/2" O.D.minimum.		
	13	Filter regulator		Required		
	14	Valve position indicator		OPEN/CLOSE		
	15	Manual override		Required on the actuator LCP		
	16	Failure Position		Fail Last		
	17	Painting		As per painting specification/Manufacturer standard		
	18	Local control panel cum JB		Required with Local Open & Close PB, L/R switch, JB, Limit switches & SOVs connections,DP switch signal etc.		
	19	Control panel material		SS 316		
	20	Logic/Tubing components		SS 316 (minimum)		
	21	Tube fittings		SS 316		
	22	Panel enclosure class		IP-65 or better		
	23	Stroke time		2-3 seconds per inch		
	24	Gas storage & hyd. Cylinder capacity		Min. two open & two close operations in case of loss of line pressure		
	25	Position switches		Required for both open and closed positions		
	26	Solenoid valve		Required, two (2) nos. One for open & other for close		
	27	Adjustable stopper for actuator		Required for both opening & closing		
	28	Stem Extension		Required for SV stations of GOOV		
	29	Switch Type		Non contact Proximity type with NAMUR design		
	30	Contact Rating		24 VDC, 1A		
	31	Cable Entry (Junction Box)		Total seven (7) nos.: 1/2" NPTF (3 nos), 3/4" NPTF (1 Nos.), 1" NPTF(1 No.). One each 1/2" NPTF & 3/4 " NPTF cable entry shall be kept as spare with plug.		
	32	Enclosure Material		SS 304		
	33	Enclosure Class		NEMA 4X (Note-1)		
	34	Certification		Required		
	35	Certification Agency		UL/FM/BASEEFA or Equal		
SERVICE	36	Fluid		Natural Gas		
	37	Flow :	Min. / Max.	Refer Process datasheet/P&ID		
	38		Normal			
	39	Operating Pressure	Min / Norm / Max			
	40	Press. Drop at normal flow	(bar g)			
	41	Design Pressure	(bar g)			
	42	Temperature	Operating / Design			
	43	Density at normal flow	Mol. Wt.			
	44	Compressibility Factor	Cp/Cv			
	45	Viscosity	Cp			
	46					
OTHERS	47	Manufacturer		*		
	48	Model No.	VALVE	**		
	49		ACTUATOR	*		
	50		VALVE POSITION SWITCH	*		
NOTES		"*" Bidder to provide /hold		"**" Refer Valve Data Sheet		

1	Limit switches,OPEN/CLOSE PB,local/remote selector switch, SOVs, DPS etc. shall be intrinsically safe to specified area classification.
2	Flying Leads are not acceptable.
3	Supplier shall provide Open/ Close push button, Local/remote selector swich and limit switches,SOVs,DPS,local control panel/JB,AFR,accumulator,local pressure gauges,safety valves,NRV etc. as required, shall be provided along with the GOV.
4	Suggested Vendor name of GOOV Actuators-Biffi Italia Srl, Ledeen(Italy), Virgo Valves & Control ltd.-India, Voith, Bettis, Rotork-UK, USA, India, Rotex, Schuck Group, Valve Italia. If Valve Vendor opt for any other actuator manufacturer not appearing in the list, the credentials and past track record of the new actuator manufacturer shall be submitted for purchaser review prior to construction.
5	Actuator shall be designed to operate it at max. differential pressure.
6	Differential pressure switch shall be provided across the valve, which is the part of the valve accessories.
7	GOV Operation logic shall be implemented in TIC (Telemetry Interface Cabinet) panel only.
8	The gas Pressure impulse for GOOV shall be taken either from Valve body or as shown in P&ID.
9	All limit switch signals,local OPEN/CLOSE PB signal,local/remote selector switch signal, SOVs & DPS signal shall be pre-wired in local control panel (LCP)/JB of GOV. Customer will lay one (1) multipair cable from actuator local control panel (LCP)/JB to remoteTIC(Telemetry Interface Cabinets) for hardwired signal interfacing. All the Signal interfacing shall be through potential free contacts. The voltage level shall be 24V DC.The operating voltage of SOV shall be 24V DC.

Energising Quality	CLIENT:	Indradhanush Gas Grid Ltd.	C1	11.05.2022	VK	DGM	KNC
			B1	04.05.2022	VK	SV	KNC
	PROJECT:	NORTH EAST GAS GRID PHASE-III of IGGL	A1	02.05.2022	VK	SV	KNC
			REV	DATE	PREP	CHKD	APPR

Document No.: C221052-00-IN-DS-5002

ENERGISING QUALITY

VCS QUALITY SERVICES PVT.LTD.

STANDARD SPECIFICATION
FOR
PIPELINE BALL VALVES

VPC-SS-PP-2004

03	03.01.2022	SR	MC	HK	HK
Rev. No	**Date**	**Prepared By**	**Checked By**	**Approved By**	**Authorized By**

UNCONTROLLED COPY	:	If printed
CONTROLLED COPY	:	If in soft and signed

REVISION RECORD						
Rev.	**Revision Date**	**Prepared by**	**Checked by**	**Approved by**	**Authorized by**	**Revision Description**
00	23.06.2017					Issued as Standard
		AS	SM	AD	SK	
01	22.05.2019					Revised based on API 6D 24TH Edition.
		BS	MC	AD	SK	
02	28.01.2020					Documents Formatting, numbering updated from SS-PL-004 to VPC-SS-PP-2004, vent drain Diagram updated, other Detail updated as marked
		MB	MC	AD	SK	
03	07.01.2022					Revised as Marked
		SR	MC	HK	HK	

ABBREVIATIONS:

ASME	American Society of Mechanical Engineers
ASTM	American Society for Testing and Materials
API	American Petroleum Institute
BHN	Brinell Hardness Number
DN	Nominal Size
HAZ	Heat Affected Zone
LC	Lock Close (valve locked in full close position)
LO	Lock Open (valve locked in full open position)
MSS-SP	Manufacturers Standardization Society - Standard Practice
NDT	Non Destructive Testing
NPS	Nominal Pipe Size
RTJ	Ring Type Joint
SSPC	Steel Structures Painting Council
MPI	Magnetic Particle Inspection
DP	Dye Penetrant

CONTENTS

1 SCOPE 5
2 REFERENCE DOCUMENTS 5
3 MATERIALS 6
4 DESIGN AND CONSTRUCTION REQUIREMENTS 7
5 INSPECTION & TESTS 13
6 TEST CERTIFICATES 16
7 PAINTING 16
8 MARKING & SHIPMENT 16
9 SPARES & ACCESSORIES 17
10 DOCUMENTATION 17

1 SCOPE

This specification covers the minimum requirements for design, manufacture, testing and supply of carbon steel ball valves of size DN 50 mm (2") and above and ASME pressure rating Class 150# thru 900# for use in onshore pipeline systems handling non-sour hydrocarbons in liquid or gaseous phase including Liquefied Petroleum Gas (LPG).

2 REFERENCE DOCUMENTS

All valves shall be manufactured and supplied in accordance with the American Petroleum Institute (API) Specification 6D, latest edition (edition in force at the time of issue of enquiry), Specification for Pipeline and Piping Valves, with additions and modifications as indicated in the following sections of this specification.

Reference has also been made in this specification to the latest edition (edition in force at the time of issue of enquiry) of the following Codes, Standards and Specifications.

2.1 American Society of Mechanical Engineers (ASME)

B31.3	:	Process Piping.
B31.4	:	Pipeline Transportation System for Liquid and Slurries.
B 31.8	:	Gas Transmission and Distribution Piping Systems.
B16.5	:	Pipe Flanges and Flanged Fittings.
B16.10	:	Face to Face and End to End Dimensions of Valves.
B 16.25	:	Butt Welding Ends.
B 16.34	:	Valves-Flanged, Threaded and Welding Ends.
B 16.47	:	Large Diameter Steel Flanges.
Section VIII	:	Boiler and Pressure Vessel Code - Rules for Construction of Pressure Vessels.
Section IX	:	Welding and Brazing Qualifications.

2.2 American Petroleum Institute (API)

1104	:	Specification for Welding of Pipelines and Related Facilities.

2.3 American Society for Testing and Materials (ASTM)

A370	:	Standard Test Methods and Definitions for Mechanical Testing of Steel Products.
B 733	:	Auto catalytic (Electro less) Nickel - Phosphorus Coatings on Metal.

2.4 Manufacturers Standardization Society (MSS)

SP-6	:	Standard Finishes for contact faces of Pipe Flanges and Connecting – End Flanges of Valves and Fittings.
SP-44	:	Steel Pipeline Flanges.

2.5 Steel Structures Painting Council (SSPC)

SSPC-VIS-I	:	Steel Structures Painting Council Visual Standard-Guide and Reference Photographs for Steel Surfaces prepared by Dry Abrasive Blast Cleaning.

2.6 In case of conflict between the requirements of this specification, API 6D and the Codes, Standards and Specifications referred above, the requirements of this specification shall govern.

3 MATERIALS

3.1 The material of major components of the ball valves shall be as indicated in Valve Data Sheet. Remaining components shall be as per Manufacturer's standard (suitable for the service indicated in the data Sheet) and shall be subjected to approval by Company. In addition, the material shall also meet the requirement specified hereinafter.

All process-wetted parts, metallic and non-metallic, sealant and lubricants shall be suitable for the service specified by the Company. Manufacturer shall confirm that all wetted parts are suitable for treated water/ seawater environment, which may be used during field testing.

Non-metallic parts of the valves (including O-rings, soft seals etc.) intended for hydrocarbon gas service shall be resistant to explosive decompression.

3.2 Carbon steel used for the manufacture of valves shall be fully killed.

3.3 The carbon equivalent (CE_{IIW}) of valve end connections which are subject to further field welding by Company shall not exceed 0.43 on check analysis for each heat of steel used, as calculated by the following formula:

$$CE_{IIW} = C + \frac{Mn}{6} + \frac{Cr + Mo + V}{5} + \frac{Cu + Ni}{15}$$

3.4 Charpy V-Notch Test Requirements

Charpy V-notch test on each heat of base material shall be conducted for all pressure containing parts such as Body, End Flanges, Stem and Welding Ends as well as Bolting materials for pressure containing parts.

Test procedure for Charpy V-Notch Test shall conform to ASTM A370.

For Carbon Steel, alloy steel & Stainless Steel (except Austenitic Grades) Materials, The impact test temperature shall be 0 °C or minimum design temperature indicated in valve

data sheet / MR, whichever is lower. The average absorbed energy value of three full sized specimens shall be 27 J (for materials with Specified Minimum Tensile Strength ≤100,000 psi)/ 34 J (for materials with Specified Minimum Tensile Strength >100,000 psi). The minimum impact energy value of any one specimen of the three specimens analysed as above, shall not be less than 22 J (for materials with Specified Minimum Tensile Strength ≤100,000 psi)/ 26 J (for materials with Specified Minimum Tensile Strength >100,000 psi).

For Low Temperature Carbon Steel Materials, the impact test temperature shall be as per requirement of Material Standard or minimum design temperature indicated in valve data sheet/MR, whichever is lower. The average absorbed energy value of three full sized specimens shall be 27 J (for materials with Specified Minimum Tensile Strength ≤100,000 psi)/ 34 J (for materials with Specified Minimum Tensile Strength >100,000 psi). The minimum impact energy value of any one specimen of the three specimens analysed as above, shall not be less than 22 J (for materials with Specified Minimum Tensile Strength ≤100,000 psi)/ 26 J (for materials with Specified Minimum Tensile Strength >100,000 psi).

Where the material specification requires impact values to be higher than specified in the above paragraphs, the higher values shall apply.

For duplex & super duplex stainless steel the Charpy V-Notch test values and test temperature shall be as per API 6D.

3.5 Hardness Test Requirements

For valves specified to be used for Gas service or LPG service, Hardness test shall be carried out as per ASTM A370 for each method of manufacture and each heat of steel used in the manufacture of valves. A full thickness cross section shall be taken for this purpose and the maximum hardness of the materials of valve components shall not exceed 248 HV_{10}.

3.6 Electroless Nickel Plating Requirements

For all such valves where Carbon Steel/Low temperature carbon steel is used as ball material, the ball shall have 75 micrometers (0.003 inches) thick Electro less Nickel Plating (ENP) as per ASTM B 733 with following classification:

- SC2, Type II, Class 2.

The hardness of plating shall be minimum 50 RC.

4 DESIGN AND CONSTRUCTION REQUIREMENTS

4.1 General

Valve design shall meet the requirements of API Specification 6D and shall be suitable for the service conditions indicated in the Valve Data Sheet. The ASME Boiler & Pressure Vessel Code, Section VIII, Div 1 shall be used to design the valve body. Allowable stress requirements shall comply the provisions of above code. Also, corrosion allowance indicated in Valve Data Sheet shall be considered in valve design; however, the minimum wall thickness shall not be less than the minimum requirement of ASME B16.34. The

manufacturer shall have valid license to use API monogram on valves manufactured as per API 6D.

4.2 Valve Installation

Valves shall be suitable for either buried or above ground installation as indicated in Valve Data Sheet/ Material requisition.

4.3 Valve Body

4.3.1 For above ground valve, valve body design shall be either fully welded or bolted type. For buried valves, valve body design shall be fully welded type only. Valve body joints with threads are not permitted.

4.3.2 Ball mounting shall be trunnion or pivot type only. Valve design shall minimize the possibility of debris ingress into the trunnion as far as practicable

4.4 Ball

Ball shall be of single piece, solid type construction.

4.5 Valve Bore Configuration

Valves shall be Full bore (FB) or Reduced bore (RB) as indicated in the Valve Data Sheet.

Full Opening Valve

Full bore valves shall be suitable for the passage of all types of pipeline pigs including instrumented intelligent pigs and regular cleaning, batching and scraper pigs on regular basis without causing damage to either the valve component or the pig. The full bore, valve shall provide an unobstructed profile for pigging operations in either direction. Full bore valves shall be designed to minimize accumulation of debris in the seat ring region to ensure that valve movement is not impeded. The bore of full bore butt-welded & flanged valves shall be in line with Connecting pipe as stated in valve data sheet or Valve MR, however in any case it shall not be less than the minimum required shown in Client Ball Valve specification & API 6D.

Reduced Opening Valve

The bore size of reduced bore valve shall correspond to that of a full-bore valve of smaller nominal diameter as indicated in Table- 4.5 below. For sizes of a particular rating not covered in API 6D, the bore size of the reduced bore valve shall be as per manufacturer`s Standard.

TABLE – 4.5

Nominal Valve Size	Nominal Valve Size for Reduced Bore	Nominal Valve Size	Nominal Valve Size for Reduced Bore
DN mm (NPS inches)	DN mm (NPS inches)	DNmm (NPSinches)	DNmm (NPS inches)
50 (2)	40 (1.5)	600 (24)	500 (20)

80 (3)	50 (2)	650 (26)	550 (22)
100 (4)	80 (3)	700 (28)	600 (24)
150 (6)	100 (4)	750 (30)	600 (24)
200 (8)	150 (6)	800 (32)	650 (26)
250 (10)	200 (8)	850 (34)	700 (28)
300 (12)	250 (10)	900 (36)	750 (30)
350 (14)	250(10)	950 (38)	800 (32)
400 (16)	300 (12)	1000 (40)	850 (34)
450 (18)	350 (14)	1050 (42)	900 (36)
500 (20)	400 (16)	1200 (48)	1050 (42)
550 (22)	450 (18)		

4.6 Seat Design

The valves shall either be a soft seated valve or metal seated valve or with primary metal-to metal contact and secondary soft seats or seat design shall be as indicated in valve data sheet.

For soft seated valves, Metal seat rings may be provided with soft insert. The same shall be positively locked in position in Metal seat rings.

For valves with primary metal to metal contact and secondary soft seats, O-rings or other seals if used for drip tight sealing shall be encased in a suitable groove in such a manner that it cannot be removed from seat ring and there is no extrusion during opening or closing operation of valve at maximum differential pressure corresponding to valve class rating. The seat rings shall be so designed as to ensure sealing at low as well as high differential pressures.

4.7 Valves shall be designed to withstand a sustained internal vacuum of at least 1 (one) mille-bar in both open and closed positions.

4.8 Double Block & Bleed Design

Valves shall have double block and bleed feature to facilitate complete flush, drain and venting of the valve body cavity. Cavity relief pressure shall be as per API 6D.

4.9 Sealant Injection

Full bore valves of nominal valve size DN 200 mm (8") & above and Reduced Bore valves of nominal valve size DN 250 mm (10") & above, shall have provision for secondary sealant injection under full line pressure for seat and stem seals. All sealant injection connections shall be provided with block valve and an internal non-return valve. Valve design shall have a provision to replace the sealant injection fitting under full line pressure. Location and arrangement of sealant points shall be as per Fig 4.9.

4.10 Vent & Drain

Valves shall be provided with vent and drain connections. Location and arrangement of

vents and drains shall be as per Fig. 4.9. Body vent and drain shall be provided with valves (Ball or Plug type). Number and size shall be as per Fig. 4.9.

Valve design shall ensure repair of stem seals/ packing under full line pressure.

4.11 Support Foot

Full bore valves of nominal valve size DN 200 mm (8") & above and Reduced bore valves of nominal valve size DN 250 mm (10") & above, shall be equipped with support foot and lifting lugs unless specified otherwise. Tapped holes and eyebolts shall not be used for lifting lugs. Height of support foot shall be kept minimum. The location and size of support foot/ lifting lugs shall ensure unrestrictive operation of vent/ drain valves. The design of support foot shall be such that it shall take minimum double the weight of the valve assembly.

4.12 Valve design shall be such as to avoid bimetallic corrosion between carbon steel and high alloy steel components. Suitable insulation shall be provided as required.

4.13 The valve body cavity over-pressure shall be prevented by self-relieving seat rings/ assemblies. Valve Cavity relief pressure when added to the valve pressure rating shall not exceed 133% of the pressure rating of the valve at its maximum specified design temperature.

4.14 Valve Ends

Valve ends shall be either flanged/ or butt welded or one end flanged and one end butt welded as indicated in the Valve Data Sheet. Flanges of the flanged end cast/ forged body valves shall be integrally cast/ forged with the body of the valve. Face to face/ end to end dimensions shall conform to API 6D. Face-to-face and end-to-end dimensions for valve sizes not specified in API 6D shall be in accordance with ASME B 16.10. Face-to-face and end-to-end dimensions not shown in API 6D or in ASME B 16.10 shall be as per Manufacturer Standard and shall be subject to approval by Company.

Flanged ends, if specified, shall have flanges as per ASME B16.5 for valve sizes up to DN 600 mm (24") excluding DN 550 mm (22"), as per MSS-SP-44/ ASME B 16.47 Series A for valve sizes DN 550 mm (22") and for DN 650 mm (26 inches) and above. Flange face shall be either raised face or ring joint type (RTJ) as indicated in Valve Data Sheet. Flange face finish shall be serrated or smooth as indicated in Valve Data Sheet. In case of RTJ flanges, the groove hardness shall be minimum 140 BHN.

Butt weld end preparation shall be as per ASME B 16.25. The thickness of the pipe to which the valve has to be welded shall be as indicated in the Valve Data Sheet. In case difference exists between thickness of welding ends of valve and connecting pipe, the welding ends of valve shall have bevel preparation as per ASME B31.4 or ASME B31.8 as applicable.

In case of all Butt welded end valves (including soft seated valves or valves with primary metal to metal and secondary soft seats), actual yield strength of valve body shall not be less than 2/3rd of the specified minimum yield strength (SMYS) of the connecting pipe material.

For soft seated valves with Butt welded end, valves shall be provided with pup pieces on

either side of length 200 mm each for size up-to 8" & 250 mm for size 10" and above, with material as specified in valve data sheet. Length of pup piece shall be confirmed by manufacturer so as to avoid damage to seats during field welding or post weld heat treatment. Pup piece thickness shall be calculated for the class rating. Vendor shall provide for each type (considering size, grade and thickness of the pup pieces used for all offered valves) of pup piece, test rings (500 mm long) from pup piece material for field weld procedure qualification. Valves shall be tested along-with pup piece.

4.15 Design of weld end valves shall be such that during field welding operations, the soft seals or plastic components of the valve (where ever used) is not liable to be damaged. The manufacturer shall furnish necessary field welding instructions and post-weld test procedure to demonstrate integrity and leak-tightness of valves after field welding operations.

4.16 POSITION INDICATORS

Valve shall be provided with ball position indicator and stops of rugged construction at the fully open and fully closed positions. For actuated valves, additionally mechanical means of position indicator shall be provided.

4.17 STEM EXTENSIONS

When stem extension requirement is indicated in Valve Data Sheet, the valves shall have the following provisions.

a. Valves provided with stem extension shall have water proof outer casing. Length of stem extension shall be as indicated in Valve Data Sheet. The length indicated corresponds to the distance between centerline of the valve opening and the top of mounting flange for valve operating device (gear operator/ power actuator as applicable).

b. In case of below Ground LTCS valves, Stem extension material shall be equivalent to stem material.

c. Vent and drain connections and sealant injection lines shall be terminated adjacent to the valve operator by means of suitable piping anchored to the valve body. The pipe used shall be API 5L Gr. B/ ASTM A 106 Gr. B, with Sch 160 for carbon steel valves and ASTM A 333 Gr 6, with Sch 160 for Low temperature carbon steel valves or the material shall be as specified in valve data sheet. The material of fittings for Carbon Steel valve shall be ASTM A105/ ASTM A234 Gr. WPB and material for the fittings for low temperature carbon steel valves shall be ASTM A 350 Gr LF2 Cl 1 or the material shall be as specified in valve data sheet. The fittings and valve end shall be Socket welded ANSI class 6000# as per ASME B 16.11 (For piping class up to 600#) and BW end (For Piping Class 900#).

d. Stem extension and stem housing design shall be such that the complete assembly will form a rigid unit giving positive drive under all conditions with no-possibility of free movement between valve body, stem extension or its operator.

e. Outer casing of stem extension shall have 3/8” or 1/2" NPT plugs at the top and bottom, for draining and filling with oil to prevent internal corrosion.

f. The Stem Extension shall be self-relieving.

4.18 OPERATING DEVICES

a. Valves shall have a power actuator or manual operator as indicated in the Valve Data Sheet. In case of manual operator, valve sizes, DN ≤ 100 mm (4") shall be wrench operated and valve sizes, DN ≥ 150 mm (6") shall be gear operated. The length of wrench shall not be longer than twice the face to face or end to end dimension of the valve. Each wrench operated valve shall be supplied with wrench. Valve design shall be such that damage due to malfunctioning of the operator or its controls will only occur in the operator gear train or power cylinder and that damaged parts can be replaced without the valve cover being removed.

b. The power actuator shall be in accordance with the Company Specification issued for the purpose and as indicated in the Valve and Actuator Data Sheet. Operating time shall be as indicated in Valve Data Sheet. Valve operating time shall correspond to full close to full open/ full open to full close under maximum differential pressure corresponding to the valve rating. For actuated valves, the actuator's rated torque output shall be 1.25 times the break torque required to operate the ball valve under the maximum differential pressure corresponding to the Valve Class Rating.

c. For the manual operator of all valves, the diameter of the hand wheel or the length of operating wrench shall be such that under the maximum differential pressure, the total force required to operate the valve does not exceed 350N. However, failing to meet above requirement, vendor shall offer gear operated valves. Manufacturer shall also indicate the number of turns of hand wheel in case of gear operators (along with their offer) required for Operating the valve from full open to full close position. The numbers of turn shall not exceed 250 for valves sizes up to 24” and 450 for valve size above 24”.

d. Direction of operation of hand wheel or wrench shall be in clock-wise direction while closing the valve. Hand wheels shall not have protruding spokes.

e. Gear operators, when provided, shall have a self-locking provision and shall be fully encased in water proof/ splash proof enclosure and shall be filled with suitable grease.

4.19 The tolerance on internal diameter and out of roundness at the ends for welded ends valves shall be as per connected pipe specification as indicated in the Valve Data Sheet.

4.20 LOCKING DEVICES

When indicated in Material Requisition/Data sheet/ Tender, valves shall have locking devices to lock the valve either in full open (LO) or full close (LC) positions. Locking devices shall be permanently attached to the valve operator and shall not interfere with operation of the valve.

4.21 WELDING

All welds shall be made by welders and welding procedures qualified in accordance with the provisions of ASME Section IX. The procedure qualification shall also include impact test and hardness test when required as per Clause 3.4 to 3.5 of this specification and shall meet the requirements as specified therein.

4.22 REPAIR WELDING

Repair by welding is not permitted for fabricated and forged body valves. However, repair

by welding as per ASME B16.34 is permitted for cast body valves. Such repairs shall be carried out at casting supplier's care only. Repair shall be carried out before any heat treatment of casting is done. Repair welding procedure qualification shall also include impact test and hardness test when required as per Clause 3.4 to 3.5 of this specification and shall meet the requirements as specified therein. Heat treatment and radiography shall be repeated after the weld repair.

4.23 No Casting is permitted for stem and stem extended material of all valve. Valve stem shall be capable of withstanding the maximum operating torque required to operate the valve against the maximum differential pressure corresponding to applicable class rating. The combined stress shall not exceed the maximum allowable stresses specified in ASME section VIII, Division 1. For power actuated valves, the valve stem shall be designed for maximum output torque of the selected power actuator (including gear box, if any) at valve stem.

4.24 Wherever specified for the part of valve in valve data sheet, minimum thickness of stelliting shall be 1.6mm

4.25 All Soft seated valves shall be fire safe design and qualified as per API 6FA/ API 607/ ISO 10497.

4.26 Soft-seated valves shall have antistatic device.

5 INSPECTION & TESTS

5.1 The Manufacturer shall perform all inspection and tests as per the requirements of this specification and the relevant codes, prior to shipment, at his works. Such inspection and tests shall be, but not limited to, the following:

5.2 All valves shall be visually inspected. The internal and external surfaces of the valves shall be free from any strikes, gouges and other detrimental defects. The surfaces shall be thoroughly cleaned and free from dirt, rust and scales.

5.3 Dimensional check on all valves shall be carried out as per the Company approved drawings.

5.4 Chemical composition and mechanical properties shall be checked as per this specification and relevant material standards, for each heat of steel used.

5.5 Non-destructive examination of individual valve material and component consisting of but not limited to castings, forgings, plates and assembly welds shall be carried out by the Manufacturer.

a. Body castings of all valves shall be radio graphically examined as per ASME B16.34. Procedure and acceptance criteria shall be as per ASME B 16.34. The extent of the radiography shall be as under:

Pressure Class Rating	Valve Size	Extent of Radiography
ANSI 150 # Class	≤ DN 600 mm (24")	Nil
	≥ DN 650 mm (26")	100%

ANSI 300 # Class	≤ DN 400 mm (16") ≥ DN 450 mm (18”)	Nil 100%
ANSI 600 # Class and above	All sizes	100%

Radiography shall be performed after the final heat treatment also.

All castings shall be wet magnetic particle inspected 100% of the internal surfaces. Method and acceptance shall, comply with ASME B 16.34.

b. All valves, with body fabricated from plates or made by, forgings, shall be ultrasonically examined in accordance with the procedure and acceptance standard as per ASME B16.34.

All forgings shall be Wet magnetic particle inspected 100% of the internal surfaces. Method and acceptance shall comply with ASME B16.34.

c. Bodies and bonnets made by welded assembly of segments of castings, forgings, plates or combinations thereof shall be examined, as applicable, by methods of 5.5 (a) for cast components or 5.5 (b) for forged components and plates.

5.6 Full inspection by radiography shall be carried out on all welds of pressure containing parts. Acceptance criteria shall be as per ASME B 31.4 or ASME B31.8 as applicable and API 1104.

5.7 Welds, which in Company's opinion cannot be inspected, by radiographic methods, shall be checked by ultrasonic or magnetic particle methods and acceptance criteria shall be as per ASME Sec. VIII , Division 1, Appendix 12 and, Appendix 6 respectively.

5.8 All finished wrought weld ends subject to welding in field shall be 100% ultrasonically tested for lamination type defects for a distance of 50 mm from the end. Laminations shall not be acceptable.

a. Weld ends of all cast valves subject to welding in field shall be 100% radio graphically examined and acceptance criteria shall be as per ASME B16.34.

b. After final machining, all bevel surfaces shall be inspected by dye penetrant or wet magnetic particle methods. All defects longer than 6.35 mm are rejected, as are the defects between 6.35 mm and 1.59 mm that are separated by a distance less than 50 times their greatest length. Rejectable defects must be removed. Weld repair of bevel surface is not permitted.

5.9 All valves shall be tested in compliance with the requirements of API 6D. During pressure testing, valves shall not have sealant lines and other cavities filled with sealant, grease or other foreign material: The drain, vent and sealant lines shall be either included in the hydrostatic shell test or tested independently. Test pressure shall be held for at least 30 minutes for both Shell & seat Test. No leakage is permissible during hydrostatic testing. The body cavity self-relieving feature meeting the requirements of clause 4.13 of this specification shall also be checked.

5.10 A supplementary air seat test as per API 6D (Annex I, Para I.9 Type II) shall be carried

out for all valves. A bubble tight seal is required without the use of any sealant. No leakage is allowed. Test pressure shall be held for at least 15 minutes.

5.11 Valves shall be subjected to Operational Torque Test as per API 6D (Annex I, Para I.6) under hydraulic pressure equal to maximum differential pressure corresponding to the applicable ANSI class rating of valve. It shall be established that the force required to operate the valve does not exceed the requirements stated in section 4.18 (C) of this specification.

5.12 Power actuated valves shall be tested after assembly of the valve and actuator, at the valve Manufacturer's works. At least five Open-Close-Open cycles without internal pressure and five Open-Close-Open cycles with maximum differential pressure corresponding to the valve rating shall be performed on the valve actuator assembly. The time for Full Open to Full Close shall be recorded during testing. If required, the actuator shall be adjusted to ensure that the opening and closing time is within the limits stated in Valve Data Sheet.

Hand operator provided on the actuator shall also be checked after above testing, for satisfactory manual over-ride performance.

These tests shall be conducted on minimum one valve out of a lot of five (5) valves of the same size, rating and the actuator model/ type. In case, the tests do not meet the requirements, retesting/ rejection of the lot shall be decided by the Company's Inspector.

5.13 Subsequent to successful testing as specified in clause 5.11 and 5.12 above, one (1) valve out of the total ordered quantity shall be randomly selected by the Company Representative for cyclic testing as mentioned below:

a. The valve shall be subjected to at least 100 Open-Close-Open cycles with maximum differential pressure corresponding to the valve rating.
b. Subsequent to the above, the valve shall be subjected to hydrostatic test and supplementary air seat test in accordance with clause 5.9 and 5.10.

In case this valve fails to pass these tests, the valve shall be rejected and two more valves shall be selected randomly and subjected to testing as indicated above. If both valves pass these tests, all valves manufactured for the order (except the valve that failed) shall be deemed acceptable. If either of the two valves fails to pass these tests, all valves shall be rejected or each valve shall be tested at the option of manufacturer.

Previously carried out test of similar nature shall be considered acceptable if the same has been carried out by Manufacturer in last two years. Valves of two sizes below and two sizes above the size of valve previously tested, and rating similar or one rating lower of valve tested previously, shall be qualified.

5.14 Checks shall be carried out to demonstrate that the dissimilar metals used in the valves are successfully insulated as per the requirement of clause 4.12 of this specification.

5.15 Anti-Static testing for soft seated valves in accordance with L.5 of API 6D.

5.16 Company reserves the right to perform stage wise inspection and witness tests as indicated in clause 5.1 above at Manufacturer's works prior to shipment. Manufacturer shall give reasonable access and facilities required for inspection to the Company's

Inspector. Company reserves the right to require additional testing at any time to confirm or further investigate a suspected fault. The cost incurred shall be to Manufacturer's account.

In no case shall any action of Company or his inspector shall relieve the Manufacturer of his responsibility for material, design, quality or operation of valves.

Inspection and tests performed/ witnessed by the Company's Inspector shall in no way relieve the Manufacturer's obligation to perform the required inspection and tests.

6 TEST CERTIFICATES

Manufacturer shall submit the following certificates in accordance with EN 10204 3.2.

a. Mill test certificates relevant to the chemical analysis and mechanical properties of the materials used for the valve construction as per the relevant standards.
b. Report on heat treatment carried out.
c. Test certificates of hydrostatic and pneumatic tests complete with records of timing and pressure of each test.
d. Test reports of radiograph and ultrasonic inspection, MPI and DP Inspection
e. Test report on operation of valves conforming to clause 5.11, 5.12 and 5.13 of this specification.
f. All other test reports and certificates as required by API 6D and this specification.

The certificates shall be considered valid only when signed by Company's Inspector. Only those valves which have been certified by Company's Inspector shall be dispatched from Manufacturer's works.

7 PAINTING

Valve surface shall be thoroughly cleaned, freed from rust and grease and applied with sufficient coats of corrosion resistant paint. Surface preparation shall be carried out by shot blasting to SA-2 ½ / SSPC-SP10. For Coastal area, painting shall be suitable for industrial marine environment. For the valves to be installed underground, when indicated in Valve Data Sheet, the external surfaces of buried portion of the valve shall be painted with 100% Solid high build epoxy with a minimum dry film thickness of 1000 microns or 1.5 mm thick polyurethane coating.

8 MARKING & SHIPMENT

8.1 All valves shall be marked as per API 6D. The units of marking shall be metric except nominal diameter, which shall be in inches.

8.2 Valve ends shall be suitably protected to avoid any damage during transit. All threaded and machined surfaces subject to corrosion shall be well protected by a coat of grease or other suitable material. All valves shall be provided with suitable protectors for flange faces, securely attached to the valves. Bevel ends shall be protected with metallic or high impact plastic bevel protectors.

8.3 All sealant lines and other cavities of the valve shall be filled with sealant before shipment.

8.4 Packaging and shipping instructions shall be as per API 6D.

8.5 The serial number of each valve indicated on its name plate shall appear on all required documentation in accordance with EN 10204 3.2.

8.6 Name Plate material shall be minimum stainless steel. Marking shall be as per MSS-SP-25

8.7 All valves shall be transported with ball in fully opened condition

8.8 On packages, following shall be marked legibly with suitable marking ink:

a. Order Number
b. Manufacturer's Name
c. Valve size and rating
d. Tag Number
e. Serial Number

9 SPARES & ACCESSORIES

9.1 Manufacturer shall furnish list of recommended spares and accessories for valves required during start-up and commissioning and supply of such spares shall be included in the price quoted by Manufacturer.

9.2 Manufacturer shall furnish list of recommended spares and accessories required for two years of normal operation and maintenance of valves and price for such spares shall be quoted separately.

10 DOCUMENTATION

Documentation to be submitted by Manufacturer to Company is summarized below. Number of Copies (Hard copies / soft copies etc.) shall be as indicated in CONTRACT document.

10.1 At the time of bidding, Manufacturer shall submit the following documents:

a. Reference list of similar ball valves manufactured and supplied in last seven years indicating all relevant details including project, year, client, location, size, rating, service etc.

b. Torque curves for the power actuated valves along with the break torque, running torque for the valve stem and maximum allowable stem torque.

c. Copy of valid API 6D Certificate.

d. Fire Safe test certificate qualifying the valves as per API 6FA/ API 607/ ISO 10497 carried out in last 10 years shall be furnished.

e. Details of support foot including dimensions and distance from valve centreline to bottom of support foot.

f. List of recommended spares required during start-up and commissioning & 2 years of normal operation and maintenance.

10.2 After placement of order, the Manufacturer shall submit the following drawings, documents and specifications for Company's approval***:***

a. General arrangement & detailed sectional drawings showing all parts with reference numbers and material specifications, overall dimensions and features. Number of turns of hand wheel required for operating the valve from full open to full close position for Gear Operated valves, painting/ coating scheme, Complete dimensional details of support foot (where applicable), shall be indicated in the GA.

Manufacture of valves shall commence only after approval of the above documents. Once the approval has been given by Company, any changes in design, material and method of manufacture shall be notified to Company whose approval in writing of all changes shall be obtained before the valve is manufactured.

10.3 Within 30 days from the approval date, Manufacturer shall submit to Company the approved drawings, documents and specifications as listed in clause 10.2 above.

10.4 Prior to shipment, Manufacturer shall submit to Company following:

a. Test certificates as per clause 6.0 of this specification.

b. Manual for installation, erection, maintenance and operation instructions including a list of recommended spares for the valves.

10.5 All documents shall be in English language only.

ABOVE GROUND INSTALLATION

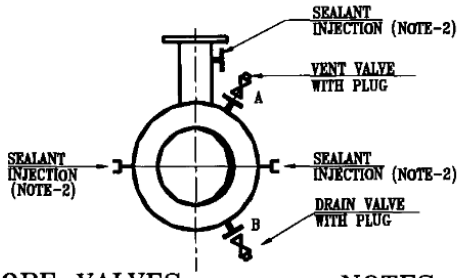

FULL BORE VALVES

VALVE SIZE, DN(mm)	A, DN(mm)	B, DN(mm)
50 TO 150	–	15
200 TO 600	15	25
650 & ABOVE	15	40

REDUCED BORE VALVES

VALVE SIZE, DN(mm)	A, DN(mm)	B, DN(mm)
50 TO 200	–	15
250 TO 750	15	25
ABOVE 750	15	40

NOTES:–

1. ALL VALVES (BALL OR PLUG) AND PLUGS FOR A AND B SHALL BE APPROVED BY THE PURCHASER.
2. SEALANT POINTS SHALL BE PROVIDED FOR FULL BORE VALVES OF NOMINAL VALVE SIZE 200 mm (8") & ABOVE AND REDUCED BORE VALVES OF NOMINAL VALVE SIZE, DN 250 mm (10") AND ABOVE ONLY. SEALANT LINES SHALL HAVE PROVISION TO REPLACE THE SEALANT INJECTION FITTING UNDER FULL LINE PRESSURE. SEALANT LINES SHALL HAVE BLOCK VALVE & INTERNAL NON RETURN VALVE.
3. ALL VENT/DRAIN CONNECTION SHALL BE WELDED WITH THE BODY.

UNDERGROUND INSTALLATION

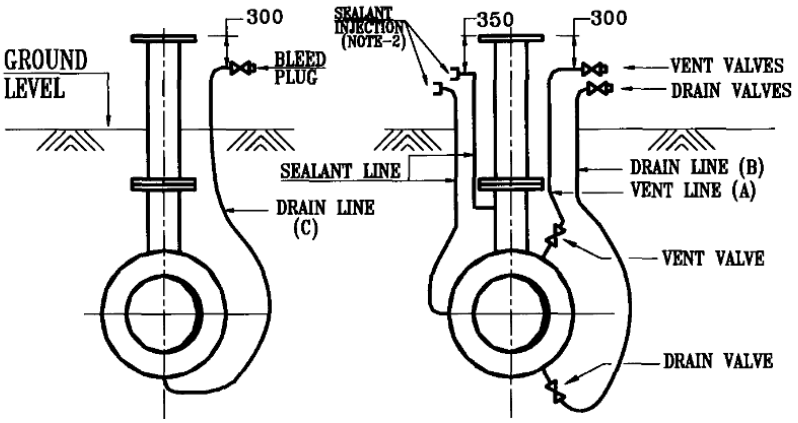

FB VALVES DN 50 mm(2") TO DN 150 mm(6") FB VALVES ≥ DN 200 mm(8")
RB VALVES DN 50 mm(2") TO DN 200 mm(8") RB VALVES ≥ DN 250 mm(10")

FULL BORE (FB) VALVES

VALVE SIZE, DN(mm)	A, DN(mm)	B, DN(mm)	C, DN(mm)
50 TO 150	–	–	15
200 TO 300	25	25	–
350 TO 600	25	25	–
650 & ABOVE	40	40	–

REDUCED BORE (RB) VALVES

VALVE SIZE, DN(mm)	A, DN(mm)	B, DN(mm)	C, DN(mm)
50 TO 200	–	–	15
250 TO 400	25	25	–
450 TO 750	25	25	–
800 & ABOVE	40	40	–

NOTES:–

1. ALL VALVES (BALL OR PLUG) AND PLUGS FOR A AND B SHALL BE APPROVED BY THE PURCHASER.
2. SEALANT POINTS SHALL BE PROVIDED FOR FULL BORE VALVES OF NOMINAL VALVE SIZE 200 mm (8") & ABOVE AND REDUCED BORE VALVES OF NOMINAL VALVE SIZE, DN 250 mm (10") AND ABOVE ONLY. SEALANT LINES SHALL HAVE PROVISION TO REPLACE THE SEALANT INJECTION FITTING UNDER FULL LINE PRESSURE. SEALANT LINES SHALL HAVE BLOCK VALVE & INTERNAL NON RETURN VALVE.
3. ALL VENT/DRAIN CONNECTION IN BURIED SECTION SHALL BE OF WELDED CONSTRUCTION. ALL PIPING INCLUDING VALVE ENDS IN BURIED PORTIONS OF VENT & DRAIN SHALL BE WELDED TYPE.

FIGURE-4.9

ENERGISING QUALITY

VCS QUALITY SERVICES PVT. LTD.

STANDARD SPECIFICATION

FOR

PLUG VALVES

VCS – SS – PP - 2051

00	03.05.2022	SR	MC	HK	HK
Rev. No	Date	Prepared By	Checked By	Approved By	Authorized By

UNCONTROLLED COPY	:	If printed
CONTROLLED COPY	:	If in soft and signed

ABBREVIATIONS:

ASME	American Society of Mechanical Engineers
ASTM	American Society for Testing and Materials
API	American Petroleum Institute
BHN	Brinell Hardness Number
DN	Nominal Size
HAZ	Heat Affected Zone
LC	Lock Close (valve locked in full close position)
LO	Lock Open (valve locked in full open position)
MSS-SP	Manufacturers Standardization Society - Standard Practice
NDT	Non Destructive Testing
NPS	Nominal Pipe Size
RTJ	Ring Type Joint
SSPC	Steel Structures Painting Council
MPI	Magnetic Particle Inspection
DP	Dye Penetrant

CONTENTS

1.0 SCOPE 4

2.0 REFERENCE DOCUMENTS 4

3.0 MATERIALS 5

4.0 DESIGN AND CONSTRUCTION REQUIREMENTS 6

5.0 INSPECTION AND TESTS 10

6.0 TEST CERTIFICATES 12

7.0 PAINTING 12

8.0 MARKING & SHIPMENT 13

9.0 SPARES AND ACCESSORIES 13

10.0 DOCUMENTATION 13

1.0 SCOPE

This Specification covers the minimum requirements for design, manufacture, testing and supply of carbon steel plug valves of size DN 50 mm (2") and above and ANSI pressure rating Class 150# thru 900# for use in onshore pipeline systems handling non-sour hydrocarbons in liquid or gaseous phase including Liquefied Petroleum Gas (LPG).

2.0 REFERENCE DOCUMENTS

2.1 All valves shall be manufactured and supplied in accordance with the American Petroleum Institute (API) Specification 6D, Latest Edition with additions and modifications as indicated in the following sections of this specification.

2.2 Reference has also been made in this specification to the latest edition (edition enforce at the time of issue of enquiry unless specified otherwise) of the following Codes, Standards and Specification.

AMERICAN SOCIETY OF MECHANICAL ENGINEERS (ASME)

B31.3	:	Process Piping.
B31.4	:	Pipeline Transportation System for Liquid Hydrocarbon & Other Liquids.
B 31.8	:	Gas Transmission and Distribution Piping Systems.
B16.5	:	Pipe Flanges and Flanged Fittings.
B16.10	:	Face to Face and End to End Dimensions of Valves.
B 16.25	:	Butt Welding Ends.
B 16.34	:	Valves-Flanged, Threaded and Welding Ends.
B 16.47	:	Large Diameter Steel Flanges.
Section VIII	:	Boiler and Pressure Vessel Code - Rules for Construction of Pressure Vessels.
Section IX	:	Welding and Brazing Qualifications.

AMERICAN PETROLEUM INSTITUTE (API)

1104	:	Specification for Welding Pipelines and Related Facilities.

AMERICAN SOCIETY FOR TESTING AND MATERIALS (ASTM)

A370	:	Standard Test Methods and Definitions for Mechanical Testing of Steel Products.

B 733	:	Auto catalytic (Electroless) Nickel - Phosphorus Coatings on Metal.

MANUFACTURERS STANDARDIZATION SOCIETY (MSS)

SP-6	:	Standard Finishes for Contact Faces of Pipe Flanges and Connecting – End Flanges of Valves and Fittings.
SP-44	:	Steel Pipeline Flanges.

STEEL STRUCTURES PAINTING COUNCIL (SSPC)

VIS-I	:	Visual Standard.

2.3 In case of conflict between the requirements of this specification, API 6D and the Codes, Standards and Specifications referred in clause 2.2 above, the requirements of this specification shall govern.

Order of precedence shall be as follows:

- Data Sheets
- This Specification
- API 6D Specification
- Other Referred Codes & Standards
- Manufacturer's Standard

3.0 MATERIALS

3.1 The Material for Construction of major components of the Plug valves shall be as indicated in Valve Data Sheet. Other components shall be as per Manufacturer's standard (suitable for the service conditions indicated in the Valve Data Sheet) and shall be subject to approval by Company.

All process-wetted parts, metallic and non-metallic, and lubricants shall be suitable for the service specified by the Company. Manufacturer shall confirm that all wetted parts are suitable for treated water/ seawater environment, which may be used during field testing.

3.2 Carbon steel used in the manufacture of valves shall be fully killed.

3.3 The carbon equivalent (CE) of valve end connections which are subject to further field welding by Company shall not exceed 0.45 on check analysis for each heat of steel used, as calculated by the following formula:

$$CE = C + \frac{Mn}{6} + \frac{Cr + Mo + V}{5} + \frac{Cu + Ni}{15}$$

3.4 CHARPY V-NOTCH TEST REQUIREMENTS

3.4.1 For valves specified to be used for Gas service or LPG service, Charpy V-notch test, on each heat of base material shall be conducted as per API 6D, for all pressure containing parts such as body,

end flanges and welding ends as well as bolting material for pressure containing parts. Unless specified otherwise, the Charpy Impact test shall be conducted at 0^0C or minimum design temperature indicated in valve data sheet / MR, whichever is lower. Test procedure shall conform to ASTM A 370. The average absorbed energy value of three full sized specimens shall be 27 J. The minimum impact energy value of any one specimen of the three specimens analyzed as above shall not be less than 22 J.

3.4.2 When Low Temperature Carbon Steel (LTCS) materials are specified in Valve Data Sheet or offered by Manufacturer, the Charpy V-notch test requirements of applicable material standard shall be complied with.

3.5 HARDNESS TEST REQUIREMENTS

For Valves specified to be used for Gas service or LPG service, Hardness test shall be carried out as per ASTM A 370 for each method of manufacture and each heat of steel used in the manufacture of valves. A full thickness cross section shall be taken for this purpose and the maximum hardness of the materials of valve components such as base material of body and principal parts of the valve such as plug, stem, etc shall not exceed 248 HV_{10}.

3.6 ELECTROLESS PLATING REQUIREMENTS

For all such valves where Carbon Steel is used as plug material, the plug shall have 75 micrometers (0.003 inches) thick Electroless Nickel Plating (ENP) as per ASTM B 733 with following classification:

- SC2, Type II, Class 2.

The hardness of plating shall be minimum 50 RC.

Manufacturer shall ensure that the adhesive strength of plating is sufficient so as to prevent peeling of plating during operation of the valve.

4.0 DESIGN AND CONSTRUCTION REQUIREMENTS

4.1 GENERAL

Valve design shall meet the requirements of API Specification 6D and shall be suitable for the service conditions indicated in the Valve Data Sheet. The valve body and other pressure containing parts shall be designed in compliance with ASME Boiler & Pressure Vessel Code, Section VIII, Div1. Allowable stress requirements shall comply the provisions of ASME B31.3. Also corrosion allowance indicated in Valve Data Sheet shall be considered in valve design. However, the minimum wall thickness shall not be less than the minimum requirement of ASME B16.34. The manufacturer shall have valid license to use API monogram on valves manufactured as per API 6D.

All process-wetted parts, metallic and non-metallic, shall be suitable for the fluids and service specified by the Purchaser

4.2 VALVE PATTERN

Valve pattern area shall be as specified in the following table:-

ANSI Pressure Rating	SIZE RANGE, DN MM (INCH)	PATTERN
Class 150 #	50-100 (2- 4)	Short
	150-300 (6 – 12)	Regular
	350(14) & above	Venturi
Class 300 #	50 -100(2 – 4)	Short
	150 - 250 (6 -10)	Regular
	300 (12) & above	Venturi
Class 600 #	50 - 250 (2 – 10)	Regular
	300 (12) & above	Venturi
Class 900 #	50 - 250 (2 – 10)	Regular
	300 (12) & above	Venturi

4.3 PLUG DESIGN

The valves shall have an inherent feature to ensure that under line pressure cannot cause taper locking of plug/ plug movement in to the taper, i.e. valves shall be of “Pressure-Balanced” design type.

4.4 Cover shall be bolted to the valve body and screwed connections are not acceptable.

4.5 Soft seats to achieve a seal between plug and body are not permitted.

4.6 SEALANT INJECTION REQUIREMENT

All valves shall have the provision for secondary sealant injection under full line pressure for seat and stem seals. All sealant injection connection shall be provided with an internal non-return valve. Valve design shall have a provision (e.g. Ball Type Check Valve/ Needle Valve) to replace the sealant injector fitting under full line pressure. Location and arrangement of sealant injection points shall be as per Fig - 4.6. Valves shall have vent and drain connections as per API 6D.

4.7 Valves shall be designed to withstand a sustained internal vacuum of at least 1 (one) milli-bar in both open and closed positions.

4.8 Valve design shall ensure repair of gland packing under full line pressure.

4.9 VALVE ENDS

a. Valve ends shall be either flanged/ or butt welded or one end flanged and one end butt welded as indicated in the Valve Data Sheet. Flanges of the flanged end cast/ forged body valves shall be integrally cast/ forged with the body of the valve. Face to face/ end to end dimensions shall conform to API 6D. Face-to-face and end-to-end dimensions for valve sizes not specified in API 6D shall be in accordance with ASME B 16.10. Face-to-face and end-to-end

dimensions not shown in API 6D or in ASME B 16.10 shall be as per Manufacturer Standard and shall be subject to approval by Company.

b. Flanged ends, if specified, shall have flanges as per ASME B16.5 for valve sizes up to DN 600 mm (24") excluding DN 550 mm (22") and as per MSS-SP-44/ ASME B 16.47 Series A for valve sizes DN 550 mm (22") and for DN 650 mm (26") and above. Flange face shall be either raised face or ring joint type (RTJ) as indicated in Valve Data Sheet. Flange face finish shall be serrated or smooth as indicated in Valve Data Sheet. In case of RTJ flanges, the groove hardness shall be minimum 140 BHN.

c. Butt weld end preparation shall be as per ASME B 16.25. The thickness of the pipe to which the valve has to be welded shall be as indicated in the Valve Data Sheet. Valves shall be without transition pups. In case difference exists between thickness of welding ends of valve and connecting pipe, the welding ends of valve shall have bevel preparation as per ASME B31.4 or ASME B31.8 as applicable.

4.10 POSITION INDICATORS

Valve shall be provided with Plug position indicator and stops of rugged construction at the fully open and fully closed positions.

4.11 VALVE INSTALLATION

Valves shall be suitable for either buried or above ground installation as indicated in Valve Data Sheet, material Requisition & P&IDs

4.12 LOCKING DEVICES

When indicated in Material Requisition, valves shall have locking devices to lock the valve either in full open (LO) or full close (LC) positions. Locking devices shall be permanently attached to the valve operator and shall not interfere with operation of the valve.

4.13 Valves of size NPS 8" and larger shall be equipped with lifting lugs. Tapped holes and eye bolts shall not be used for lifting lugs.

4.14 STEM EXTENSIONS

When stem extension requirement is indicated in Valve Data Sheet, the valves shall have the following provisions.

a. Valves provided with stem extension shall have water proof outer casing. Length of stem extension shall be as indicated in Valve Data Sheet. The length indicated corresponds to the distance between centerline of the valve opening and the top of mounting flange for valve operating device (gear operator/ power actuator as applicable).

b. Seat sealant injection lines shall be extended and terminated adjacent to the valve operator by means of suitable piping anchored to the valve body/ stem housing. The pipe used shall be API 5L Gr. B/ ASTM A 106 Gr. B, with Sch 160. Fittings shall be ASTM A105/ ASTM A 234 Gr. WPB, Socket welded ANSI class 6000.

c. Sealant injection lines shall be extended and terminated adjacent to the valve operator in manner as indicated in (b) above

d. Stem extension and stem housing design shall be such that the complete assembly will form a rigid unit giving positive drive under all conditions with no-possibility of free movement between valve body, stem extension or its operator.

e. Outer casing of stem extension shall have 3/8” or 1/2" NPT plugs at the top and bottom, for draining and filling with oil to prevent internal corrosion.

4.15 The valve stem shall be capable of withstanding the maximum operating torque required to operate the valve against the maximum differential pressure as per the appropriate class. The combined stress shall not exceed the maximum allowable stresses specified in the ASME Section VIII Div 1.

For Power Actuated Valves, the valve stem shall be designed for maximum output torque of the selected power actuator (including gear box, if any) at the valves stem

The valve stem shall have anti-blowout feature with antistatic device. The valve stem may be integral with plug or be a separate component.

4.16 OPERATING DEVICES

a. Valves shall have a power actuator or manual operator as indicated in the Valve Data Sheet. In case of manual operator, valve sizes, DN ≤ 100 mm (4") shall be wrench operated and valve sizes, DN ≥ 150 mm (6") shall be gear operated. Each wrench operated valve shall be supplied with wrench. Valve design shall be such that damage due to malfunctioning of the operator or its controls will only occur in the operator gear train or power cylinder and that damaged parts can be replaced without the valve cover being removed.

b. The power actuator shall be in accordance with the Company Specification issued for the purpose and as indicated in the Valve and Actuator Data Sheet. Operating time shall be as indicated in Valve Data Sheet. Valve operating time shall correspond to full close to full open/ full open to full close under maximum differential pressure corresponding to the valve rating. For actuated valves, the actuator's rated torque output shall be at least 1.25 times the break torque required to operate the valve under the maximum differential pressure corresponding to the valve class rating.

c. For the manual operator of all valves, the diameter of the hand wheel or the length of operating wrench shall be such that under the maximum differential pressure, the total force required to operate the valve does not exceed 350N. Manufacturer shall also indicate the number of turns of hand wheel (In case of gear operators) required for operating the valve from full open to full close position. Operating device shall be designed for easy operation of valve under maximum differential pressure corresponding to the valve rating

d. Direction of operation of hand wheel or wrench shall be in clock-wise direction while closing the valve. Hand wheels shall not have protruding spokes.

e. Gear operators, when provided, shall have a self-locking provision and shall be fully encased in water proof/ splash proof enclosure and shall be filled with suitable grease.

4.17 WELDING

All welds shall be made by welders and welding procedures qualified in accordance with the provisions of ASME Section IX, except that only positions 5G and 2G shall qualify all-positional welding. The procedure qualification shall also include impact test and hardness test when

required as per Clause 3.4 and 3.5 of this specification and shall meet the requirements as specified therein.

4.18 REPAIR WELDING

Repair by welding is not permitted for fabricated and forged body valves. However repair by welding as per ASME B16.34 is permitted for cast body valves. Such repairs shall be carried out at casting supplier's care only. Repair shall be carried out before any heat treatment of casting is done. Repair welding procedure qualification shall also include impact test and hardness test when required as per Clause 3.4 and 3.5 of this specification and shall meet the requirements as specified therein.

4.19 The tolerance on internal diameter and out of roundness at the ends for welded ends valves shall be as per connected pipe specification as indicated in the Valve Data Sheet

5.0 INSPECTION AND TESTS

5.1 The Manufacturer shall perform all inspection and tests as per the requirements of this specification and the relevant codes, prior to shipment, at his works. Such inspection and tests shall be, but not limited to, the following:

5.2 All valves shall be visually inspected. The internal and external surfaces of the valves shall be free from any strikes, gouges and other detrimental defects. The surfaces shall be thoroughly cleaned and free from dirt, rust and scales.

5.3 Dimensional check on all valves shall be carried out as per the Company approved drawings.

5.4 Chemical composition and mechanical properties shall be checked as per this specification and relevant material standards, for each heat of steel used.

5.5 Non-destructive examination of individual valve material and component consisting of but not limited to castings, forgings, plates and assembly welds shall be carried out by the Manufacturer.

a. Valve castings of all valves shall be radiographically examined at the cover and body portion, seat location, flanged body ends and circumference of ends to be field welded as per ASME B 16.34. Procedure and acceptance criteria shall be as per ASME B 16.34. The extent of the radiography shall be as under:

PRESSURE CLASS RATING	VALVE SIZE	EXTENT OF RADIOGRAPHY
ANSI 150 # Class	All Sizes	Nil
ANSI 300 # Class	≤ DN 400 mm (16") ≤ DN 450 mm (18")	Nil 100%
ANSI 600 # Class above	All Sizes	100%

All castings shall be wet magnetic particle inspected 100% of the internal surfaces. Method and acceptance shall, comply with ASME B 16.34.

b. All forgings shall be by ultrasonic method. Inspection procedure and acceptance shall comply with Annexure E of ASME B16.34.

5.6 Areas, which in Company's opinion cannot be inspected, by radiographic methods, shall be checked by ultrasonic or magnetic particle methods and acceptance criteria shall be as per ASME Sec. VIII (2007 edition), Division 1, Appendix 12 and Appendix 6 respectively.

5.7 Weld ends of all cast valves subject to welding in field shall be 100% radiographically examined and acceptance criteria shall be as per ASME B16.34.

After final machining, all bevel surfaces shall be inspected by dye penetrate or wet magnetic particle methods. All defects longer than 6.35 mm are rejected, as are the defects between 6.35 mm and 1.59 mm that are separated by a distance less than 50 times their greatest length. Rejectable defects must be removed. Weld repair of bevel surface is not permitted.

All finished wrought weld ends subject to welding in field shall be 100% ultrasonically tested for lamination type defects for a distance of 50 mm from the end. Laminations shall not be acceptable.

5.8 All valves shall be tested in compliance with the requirements of API 6D. The drain, vent and sealant lines shall be either included in the hydrostatic shell test or tested independently. Test pressure shall be held for duration mentioned in API 6D. Hydrostatic shell testing shall ensure that the whole of the shell is subjected to the test pressure. If necessary, the empty shell shall be pressure tested prior to assembly of the plug. The drain, vent and sealant lines shall be either included in the hydrostatic shell test or tested independently

5.9 No leakage is permissible during hydrostatic testing. After pressure testing and acceptance, valves shall be thoroughly drained and dried. Drying of valves internal shall be with compressed air and lint free rags. The internal surfaces shall be coated with suitable water dispelling anti-corrosion fluid. To ensure total coverage, the valve shall be placed in the half open position, filled with the fluid and drained.

5.10 A supplementary air seat test as per API 6D shall be carried out for all valves. No leakage is allowed. Test pressure shall be held for at least 15 minutes.

5.11 Manufacturer who intends bidding must submit at bid stage, certificate and report for successful fire safe tests for all types of valves in accordance with BS:6755 (Part-II)/ API 6FA, as applicable in Valve Data Sheet. Failure to comply with the requirement shall be a cause of rejection of the offer

5.12 Valves shall be subjected to an Operational Torque Test as per API 6D under hydraulic pressure equal to maximum differential pressure corresponding to the applicable ANSI class rating of valve. For manually operated valves, testing shall confirm that the torque required to operate the valve does not exceed 4.16 (c) of this specification.

5.13 Power actuated valves shall be tested after assembly of the valve and actuator, at the valve Manufacturer's works. At least five Open-Close-Open cycles without internal pressure and five Open-Close-Open cycles with maximum differential pressure corresponding to the valve rating shall be performed on the valve actuator assembly. The time for Full Open to Full Close shall be

recorded during testing. If required, the actuator shall be adjusted to ensure that the opening and closing time is within the limits stated in Valve Data Sheet.

Hand operator provided on the actuator shall also be checked after above cyclic testing, for satisfactory manual over-ride performance.

These tests shall be conducted on minimum one valve out of a lot of five (5) valves of the same size, rating and the actuator model/ type. In case, the tests do not meet the requirements, retesting/ rejection of the lot shall be decided by the Company's Inspector.

5.14 Company reserves the right to perform stage wise inspection and witness tests as indicated in clause 5.1 above at Manufacturer's works prior to shipment. Manufacturer shall give reasonable access and facilities required for inspection to the Company's Inspector. Company reserves the right to require additional testing at any time to confirm or further investigate a suspected fault. The cost incurred shall be to Manufacturer's account.

In no case shall any action of Company or his inspector shall relieve the Manufacturer of his responsibility for material, design, quality or operation of valves.

Inspection and tests performed/ witnessed by the Company's Inspector shall in no way relieve the Manufacturer's obligation to perform the required inspection and tests.

6.0 TEST CERTIFICATES

Manufacturer shall submit the following certificates in accordance with EN10204 3.2.

a. Mill test certificates relevant to the chemical analysis and mechanical properties of the materials used for the valve construction as per the relevant standards.
b. Report on heat treatment carried out.
c. Test certificates of hydrostatic and pneumatic tests complete with records of timing and pressure of each test.
d. Test reports of radiograph and ultrasonic inspection, MPI and DP Inspection.
e. Test report on operation of valves conforming to clause 5.0 of this specification.
f. All other test reports and certificates as required by API 6D and this specification.

The certificates shall be considered valid only when signed by Company's Inspector. Only those valves which have been certified by Company's Inspector shall be dispatched from Manufacturer's works.

7.0 PAINTING

Valve surface shall be thoroughly cleaned, freed from rust and grease and applied with sufficient coats of corrosion resistant paint. Surface preparation shall be carried out by shot blasting to SP-6 in accordance with "Steel Structures Painting Council - Visual Standard SSPC-VIS-1". For the valves to be installed underground, when indicated in Valve Data Sheet, the external surfaces of buried portion of the valve shall be painted with three coats of suitable coal tar epoxy resin with a minimum dry film thickness of 300 microns.

Manufacturer shall indicate the type of corrosion resistant paint used, in the drawings submitted for approval

8.0 MARKING & SHIPMENT

8.1 All valves shall be marked as per API 6D. The units of marking shall be metric except nominal diameter, which shall be in inches. Marking shall be done by die-stamping on the bonnet or on the housing. However, for buried valves the marking shall be done on the above ground portion of the stem housing only.

8.2 Valve ends shall be suitably protected to avoid any damage during transit. All threaded and machined surfaces subject to corrosion shall be well protected by a coat of grease or other suitable material. All valves shall be provided with suitable protectors for flange faces, securely attached to the valves. Bevel ends shall be protected with metallic or high impact plastic bevel protectors.

8.3 All sealant lines and other cavities of the valve shall be filled with sealant before shipment.

8.4 Packaging and shipping instructions shall be as per API 6D.

8.5 On packages, following shall be marked legibly with suitable marking ink:

a. Order Number
b. Manufacturer's Name
c. Valve size and rating
d. Tag Number
e. Serial Number

9.0 SPARES AND ACCESSORIES

9.1 Manufacturer shall furnish list of recommended spares and accessories for valves required during start-up and commissioning and supply of such spares shall be included in the price quoted by Manufacturer.

9.2 Manufacturer shall furnish list of recommended spares and accessories required for two years of normal operation and maintenance of valves and price for such spares shall be quoted separately.

10.0 DOCUMENTATION

10.1. The Manufacturer shall supply documentation in accordance with the Vendor Data Requirements List (VDRL) as attached with Purchase Order/ Material requisition. If not mentioned below minimum documentation shall be followed.

At the time of bidding, the bidder shall submit the following documents:

a) General arrangement/ assembly drawings showing all features and relative positions & sizes of vents, drains, gear box & other external parts together with overall dimensions.

b) Sectional drawing showing major parts with reference numbers and material specification.

c) Reference list of similar plug valves manufactured and supplied in last five years, indicating all relevant details including project, year, client, location, size rating, service, etc.

d) Torque curves for the power actuated valves along with break torque and maximum allowable stem torque. In addition, sizing criteria and torque calculations shall also be submitted for power actuated valves.

e) Descriptive technical catalogues of the Manufacturer.

f) Copy of valid API 6D certificate, wherever applicable.

g) Details of support foot, including dimensions and distance from valve centre line to bottom of support foot.

h) Quality Assurance Plan enclosed with this tender duly signed, stamped and accepted.

The drawings to be submitted alongwith the bid shall be in total compliance with the requirement of technical specification and data sheets of the valves with no exception & deviation.

10.2. Within two weeks of placement of order, the manufacturer shall submit six copies of, but not limited to, the following drawings, documents and specifications for approval :

a) Design drawings and relevant calculations for pressure containing parts and other principle parts.

b) Detailed sectional arrangement drawing showing all parts with reference numbers and materials specification.

c) Assembly drawings with overall dimensions & clearances required and showing all features. Drawing shall also indicate the numbers of turns of handwheel (in case of gear operator) required for operating the valve from full open to full close position and the painting scheme.

d) Welding, heat treatment, testing and quality control procedures.

e) Details of corrosion resistant paint to be applied on the valves.

f) Design calculation for pressure containing parts.

Manufacture of valves shall commence only after approval of the above documents. Once approval has been given by Purchaser, any change in design, material and method of manufacture shall be notified to the Purchaser, whose approval in writing for all changes shall be obtained before the valves are manufactured.

10.3. Within 30 days from the approval date, Manufacturer shall submit one reproducible and six copies of the approved drawings, document s and specification as listed in clause 10.2 of this specification.

10.4. Prior to shipment, Manufacturer shall submit one reproducible and six copies of following

t certificates as listed in clause 7.0 of this specification.

b) Manual for installation, erection instructions, maintenance and operation instructions, including a list of recommended spares for the valves

10.5. All documents shall be in English Language.

11.0 GUARANTEE

11.1 Manufacturer shall guarantee that the materials and machining of valves and fittings comply with the requirements in this specification and in the Purchase Order.

11.2 Manufacturer is bound to replace or repair all valve parts which should result defective due to inadequate engineering or to the quality of materials and machining.

11.3 If valve defect or malfunctioning cannot be eliminated, Manufacturer shall replace the valve without delay.

11.4 Any defect occurring during the period of Guarantee shall be attended to by making all necessary modifications and repair of defective parts free of charge to the Purchaser as per the relevant clause of the bid document.

11.5 All expenses shall be to Manufacturer's account.

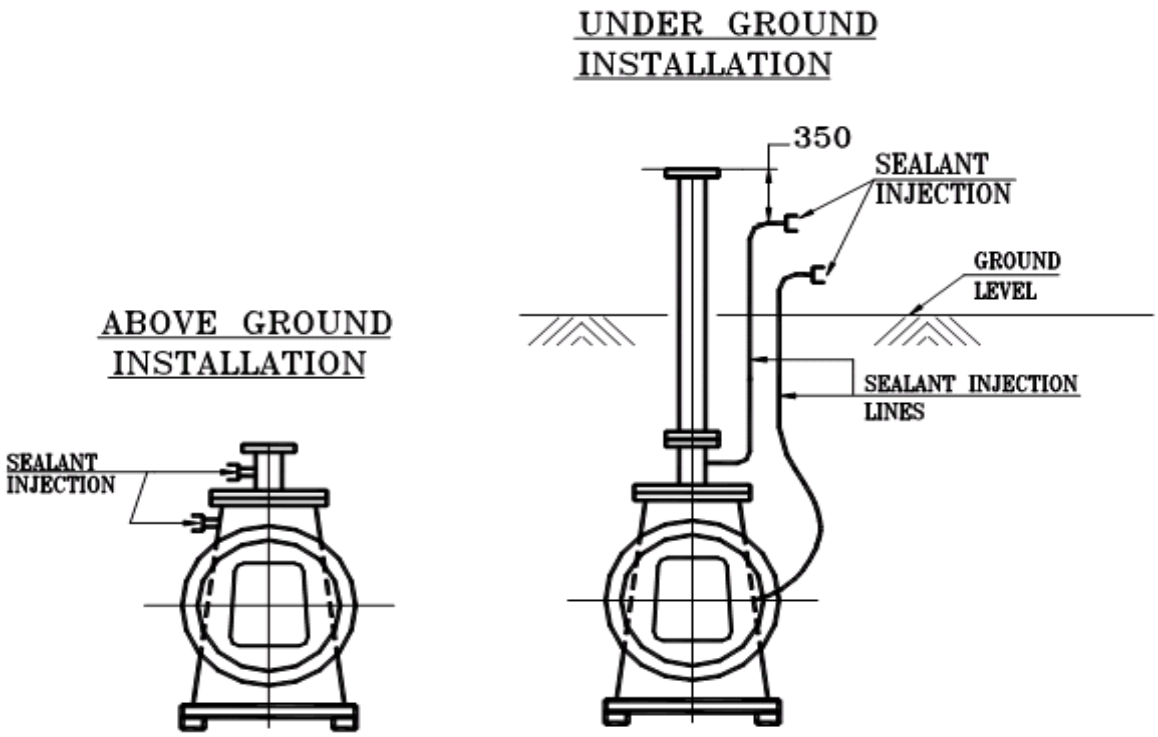

FIGURE- 4.6

ENERGISING QUALITY

VCS QUALITY SERVICES PVT.LTD.

STANDARD SPECIFICATION
FOR
ASSORTED VALVES

VPC – SS – PP - 2504

00	28.01.2020	MB	AK	AD	SK
Rev. No	Date	Prepared By	Checked By	Approved By	Authorized By

UNCONTROLLED COPY	:	If printed
CONTROLLED COPY	:	If in soft and signed

REVISION RECORD						
Rev.	**Revision Date**	**Prepared by**	**Checked by**	**Approved by**	**Authorized by**	**Revision Description**
00	28.01.2020					
		MB	AK	AD	SK	

ABBREVIATIONS:

AARH	:	Arithmetic Average Roughness Height
ANSI	:	American National Standards Institute
API	:	American Petroleum Institute
ASME	:	American Society of Mechanical Engineers
ASTM	:	American Society for Testing & Materials
BGO	:	Bevel Gear Operator
BHN	:	Brinnel Hardness Number
BIS	:	Bureau of Indian Standards
BS	:	British Standard
BVIS	:	Bureau Veritas Industrial Services
BW	:	Butt Weld
CAT	:	Category
CS	:	Carbon Steel
DFT	:	Dry Film Thickness
DNV	:	Det Norske Veritas
DP	:	Dye-Penetrant
IBR	:	Indian Boiler Regulations
IGC	:	Inter Granular Corrosion
IS	:	Indian Standard
LT	:	Low Temperature
LTCS	:	Low Temperature Carbon Steel
MOV	:	Motor Operated Valve
MP	:	Magnetic Particle
MR	:	Material Requisition
NDT	:	Non Destructive Testing
PM	:	Positive Material Identification
PO	:	Purchase Order
PR	:	Purchase Requisition
RFQ	:	Request for Quotation
SCRD	:	Screwed
SS	:	Stainless Steel
SW	:	Socket Weld

CONTENTS

1. GENERAL 5
2. DOCUMENTATION 5
3. DESIGN AND CONSTRUCTION 5
4. OPERATION 9
5. INSPECTION AND TESTING 10
6. RADIOGRAPHY OF CAST VALVES 11
7. IBR CERTIFICATION 11
8. MARKING 12
9. DESPATCH 12
10. ATTACHMENTS 12

1. GENERAL

1.1 Vendor shall supply valves in accordance with the valve specification sheets along with auxiliaries, if any, such as gear operator, bypasses, drains, locking arrangements etc. wherever specified in the specification sheets, subject notes and other enclosures to the material requisition (MR).

1.2 Vendor shall quote in strict accordance with the valve data/ specification sheets, subject technical notes and all other enclosures to the MR. For all valves, no deviations whatsoever shall be accepted.

1.3 All codes and standards for manufacture, testing, inspection etc. shall be of latest editions as on issue date of Material Requisition.

2. DOCUMENTATION

2.1 For all valves, vendor shall submit the following documents with the offer:

2.1.1 Manufacturers complete descriptive and illustrative catalogue/ literature.

2.1.2 Detailed dimensioned cross section drawing with parts/ material lists, weight etc.

2.1.3 Drawings for valves with accessories like gear operator, hydraulic/ pneumatic operator, motor, extension bonnet, extended stems with stands, bypass etc. giving major salient dimensions.

2.1.4 One copy of the valve specification sheets signed as "Accepted" by the manufacturer. Deviations, if any shall be marked as applicable on the valve specification sheet.

2.1.5 If the valve is regretted or has no deviation, the manufacturer shall write clearly on valve specification sheets as "Regret" or "No Deviation".

2.1.6 On failure to submit documents as specified in clauses 2.2.1 to 2.2.6 above, the offer is likely to be rejected.

2.2 The following documents shall be submitted in soft and hard copy after placement of the order.

2.2.1 For all valves to manufacturers' standard specified in MR/valve specification sheet, detailed dimensioned cross section drawing with parts, materials, weight, etc. shall be submitted for records/information/ review.

2.2.2 Test report shall be supplied for all mandatory tests as per the applicable code. Test reports shall also be furnished for any supplementary tests as specified in clauses 3.15.

2.2.3 Material test certificates (physical properties, chemical composition & heat treatment report) of the pressure containing parts shall be furnished for the valves supplied. Material test certificates for the other parts shall also be furnished for verification during inspection.

2.3 Catalogues/Drawings (6 sets) shall be submitted in hard copies (6 sets) and soft copies (2 CDs/DVDs) along with delivery for Purchaser's record for all categories/ types of valves.

3. DESIGN AND CONSTRUCTION

3.1 Valve shall be designed, manufactured, tested, inspected and marked as per the manufacturing standards, design codes and standards indicated in the respective valve specification sheets. Any conflict between the requisition, enclosures, specification

sheets and referred standards/ codes shall be brought to the notice of the purchaser for clarifications and resolution, before proceeding with the manufacture. The purchaser's decision shall be final and binding to the vendor. The drawings submitted for review shall not include any deviations except as communicated in writing in Deviation permits. The Drawings shall be reviewed only for design and construction features.

3.2 All flanged valves shall have flanges integral (except forged valves) with the valve body. Flange face finish shall be normally specified in the valve specification sheet as 125 AARH etc. The interpretation for range of face finish shall be as follows:

Stock Finish	:	1000 p. in AARH max.
125 AARH	:	Serrations with 125 to 250 p in AARH
63 AARH	:	32 to 63 p. in AARH

3.3 For all weld end valves with bevel end as per ASME B 16.25, the contour of bevel shall be as follows:

Material	**Wall Thickness**	**Weld Contour**
Carbon Steel (Except Low Temp. Carbon Steel)	Upto 22 mm	Figure 2 Type A
	> 22 mm	Figure 3 Type A
Alloy Steel,Stainless Steel &Low Temp. Carbon Steel	Upto 10 mm	Figure 4
	> 10 mm & Upto 25 mm	Figure 5 Type A
	> 25 mm	Figure 6 Type A

Valve ends shall match thickness of the connecting pipe. Sloping of inside contour of valves shall be done wherever necessary to achieve this.

3.4 For flanged valves with ring joint flanges the hardness shall be as follows:

Flange Material	**Min. Hardness of Groove (BHN)**
Carbon Steel	140
1% Cr to 5% Cr, 9% Cr	150
Type 304, 316, 321, 347	160
Type 304L, 316L	140

3.5 Following requirements for check valves shall be met over and above the valve specification sheet requirements:

3.5.1 Unless specified otherwise in the data sheet all check valves 3" & above (except in 900#, 1500# & 2500# rating) shall have a drain boss at location "G" (Refer Fig.No.1 of ASME B16.34) where pocket is formed in valve body. A tapped drain hole with plug shall be provided as per ASME B 16.34. Threads shall be as per ASME B 1.20.1 (Taper) NPT.

3.5.2 For heavy check valves, provisions shall be available for lifting by way of lugs, eye bolts and other such standard devices.

3.6 If an overlay weld-deposit is used for the body seat ring seating surface, the corrosion resistance of the seat ring base material shall be at least equal to the corrosion resistance of the material of the shell.

3.7 Following valve bypass requirements shall be met:

3.7.1 By-pass requirement for Gate valves shall be as follows unless otherwise mentioned.

ASME 150 Class	On sizes 26" and above
ASME 300 Class	On sizes 16" and above
ASME 600 Class	On sizes 6" and above
ASME 900 Class	On sizes 4" and above
ASME 1500 Class	On sizes 4" and above
ASME 2500 Class	On sizes 3" and above

3.7.2 The by-pass piping arrangement shall be such that clearance between main valve body and bypass assembly shall be the minimum possible for layout reasons. Vendor shall follow the sketch enclosed in this Specification No. SS-PI-012_A1.

3.7.3 By-pass valve shall be a globe valve. The sizes shall be as under:

On main valve <= 4"	:	1/2"
On main valve 6" to 8"	:	3/4"
On main valve 10" & above	:	1"

By-pass piping shall be of same metallurgy as main valve. The by-pass piping, fittings and valve tag numbers shall be as specified in Piping Material Specification (PMS).

3.8 Vendor shall supply the by-pass valve duly tested and fitted to the main valve. Valves with by-pass shall have the direction of flow marked on the main valve. By-pass attachment to the main valve body shall not be screwed. All fillet welds for by-pass installation shall be 100% examined by DP/MP test and Butt-weld joints shall be 100% examined by radiography.

3.9 Valve body / bonnet shall be forged / cast as specified. Forgings are acceptable in place of casting but not vice-versa.

3.10 Stem shall be forged or machined from forged / rolled bar. No casting is permitted. However, integral stem of cast material is acceptable for Plug valves.

3.11 Stelliting/ hardfacing by deposition shall be minimum 1.6 mm.

3.12 Renewable seat rings shall be seal welded for valves of size 3" and above to prevent loosening in service.

3.13 For Low Temperature & Cryogenic valve requirements, refer Specification. No. SS-PI-012_A2 unless otherwise specified.

3.14 For all austenitic stainless steel valves Inter Granular Corrosion (IGC) test shall be conducted as per the following:

3.14.1 ASTM A262 Practice 'B' with acceptance criteria of '60 mils/year (max.)' for all

materials forged, rolled, wrought and casting.

Or

ASTM A262 Practice `E' with acceptance criteria of 'No cracks as observed from 20X magnification' for all materials other than castings. Microscopic structure to be observed from 250X magnification' in addition.

3.14.2 When specifically asked for in MR for high temperature application of some grades of austenitic stainless steel (eg. SS309, 310, 316, 316H etc) ASTM A262 Practice 'C' with acceptance criteria of ' 15 mils/year (max.)' shall be conducted.

3.14.3 For the IGC test as described in Clauses 3.15.1 & 3.15.2, two sets of samples shall be drawn from each solution annealing lot. One set shall correspond to the highest Carbon content and the other to the highest pressure rating. When testing is conducted as per practice `E', of the microscopic structure shall be submitted for record.

3.15 All types of 321 or 347 stainless steel valves shall be in a stabilized heat treated condition. Stabilizing heat treatment shall be carried out subsequent to the normal solution annealing. Soaking temperature and holding time for stabilizing heat treatment shall be 900°C and 4 hours respectively.

3.16 Spiral wound bonnet gaskets are to be provided with inner/ outer ring except when encapsulated gaskets type body-bonnet joints are employed. Outer ring may be avoided case of non-circular spiral wound gasket used in 150# valve provided the outermost layer of spiral touches the bolts ascertaining the centering.

3.17 All Stainless Steel Castings shall be solution heat treated.

3.18 Only normalized and tempered material shall be used in the following specifications:

Castings	:	A217 Gr.WC1, A217 Gr.WC4, A217 Gr.WC5, A217 Gr.WC6, A217 Gr.WC9, A217 Gr.C5, A217 Gr.C12
Forgings	:	A182 Gr.F11 C1.2, A182 Gr.F12 C1.2

3.19 Ball / Plug / Butterfly Valves

3.19.1 As a prequalification, fire safe test as per API 607/ API 6FA/ BS EN ISO 10497 (Supersedes BS 6755 Part II) shall be carried out on soft seated ball, plug & butterfly valves and also on lubricated plug valves The test shall be witnessed and certified by a approved third party inspection agency unless otherwise specified. The vendor has to submit test certificate for the particular design of the valve offered, if fire safe design is required as per the Valve Material Specification sheet.

3.19.2 Each valve shall be supplied with a lever / wrench except for gear operated / motor operated valves.

3.19.3 Soft-seated ball, plug & butterfly valves shall be supplied with antistatic devices.

3.19.4 BW / SW end ball valves shall have pipe nipple/ pup piece welded to each end of the valve. As specified in valve datasheets nipples/ pup piece are to be welded prior to assembling Teflon seats / seals. Specifications of the nipples shall be as indicated in the MR.

3.19.5 The face-to-face dimensions of all ball valves shall be same as those of gate valves of the corresponding ANSI class (except 10" onwards in Class 150 where the face-to-face dimensions shall be as per API 6D long patterns).

3.19.6 The ball of ball valve shall not protrude outside the end flanges of valve.

3.19.7 All Ball valves shall be of floating ball/ trunnion mounted type as per following:

150#	8" & below 10" & above	Floating ball Trunnion mounted
300#	4" & below 6" & above	Floating ball Trunnion mounted
600# & above	1.5" & below 2" & above	Floating ball Trunnion mounted

3.19.8 Unless otherwise specified in the data sheets/ MR, bore of all reduced bore ball valves shall be limited to one size lower than the nominal bore.

3.20 The MOVs are to be installed in an open area and the actuators shall be suitable for all weather conditions. The testing of complete assemblies of MOVs along with the actuators shall be done by the supplier at his works.

3.21 Ends of flanged valves of 22" size shall match corresponding flanges to MSS-SP44 unless otherwise specified.

3.22 Yoke material shall be same as bonnet material where maximum temperature specified is more than 427°C.

4. OPERATION

4.1 Gear operation shall be provided as under:

Valve Type	**Class**	**Size Requiring Gear-Operator**
Gate Valve, Globe Valve & Diaphragm Valve	150 Class	12" and larger
	300 Class	12" and larger
	600 Class	10" and larger
	900 Class	6" and larger
	1500 Class	3" and larger
	2500 Class	3" and larger
Ball Valve / Plug Valve (Other than pressure balance plug valves)	150 Class	6" and larger
	300 Class	6" and larger
	600 Class	4" and larger
	900 Class	3" and larger
	1500 Class	3" and larger
Butterfly Valve	150, 300 Class	6" and larger

For sizes lower than these ranges, hand wheel / lever / wrench shall be provided. For pressure balance plug valves manufacturer's recommendation shall be acceptable provided the requirements specified in clause 4.6 are met.

4.2 Gear operator shall be provided, with position indicators for open / close positions and with limit stops. (Limit stops are not applicable for gate and globe valves).

4.3 Where gear operator is not called for as per Clause 4.1 but vendor recommends a gear operator, the same shall be highlighted.

4.4 Gear operator shall be so designed as to operate effectively with the differential pressure across the closed valve equal to the cold non-shock pressure rating.

4.5 Ball, plug and butterfly valves, shall have "Open" position indicators with limit stops.

4.6 Hand wheel diameter shall not exceed 750mm and lever length shall not exceed 500mm on either side. Effort to operate shall not exceed 35 Kg at hand wheel periphery. However, failing to meet the above requirements, vendor shall offer gear operated valve and quote as per clause 4.3.

5. INSPECTION AND TESTING

5.1 Every valve shall be subjected to all the mandatory tests and checks called in the respective codes/ data sheet by any third party as approved by the purchaser. For IBR valves refer clause 7.0.

5.2 Every valve, its components and auxiliaries must be subjected to all the mandatory tests and checks called for in the respective codes, data sheets etc. by the manufacturer.

5.3 Though the extent of inspection shall be as under, exact extent withhold points shall be decided by company/ company representative and recorded in the form of inspection plan. In case of third party inspection, the inspection plan shall be approved by the purchaser.

Forged Valves:

1. Visual and dimensional inspection.
2. Review of material test certificates.
3. Any mandatory or supplementary test.
4. Hydrostatic test on 10% valves selected on random basis.
5. Strip check is required for 1% of total ordered quantity of Gate & Globe valves (min. 1 No.) for each Valve sheet no., however, strip check is not required for CS/ Brass/ Bronze material valves with 13% Cr/ Brass/ Bronze trims.

Cast Steel Valves:

1. Visual and dimensional inspection.
2. Review of material test certificates.
3. Review of radiographs/radiographic reports or any other NDT tests wherever applicable as per data sheet.
4. Any mandatory or supplementary test.
5. Hydrostatic test 100% for body, 10% other test.
6. Strip check is required for 1% of total ordered quantity of Gate & Globe valves (min. 1 No.) for each Valve sheet no., however, strip check is not required for CS/ Brass/ Bronze material valves with 13% Cr/ Brass/ Bronze trims.

Samples for strip check shall be selected at random and shall generally be in the highest size in the lot.

5.4 In case of motor operated or actuator operated valves, functional/ operational checks as per the requirements of the specifications shall be made on each valve.

6. RADIOGRAPHY OF CAST VALVES

6.1 Valve castings shall undergo radiographic examination as specified below.

Material	Rating	Size Range	Radiography
All	150#	24" and below	NIL**
		26" and above*	100%
	300#	16" and below	NIL**
		18" and above	100%
	600# & above	All sizes	100%

* No radiography is required for valves of size 26" and above in cooling water service.

**For sizes 24" & below in 150# and 16" & below in 300#, radiography percentage if specifically mentioned in individual valve material spec sheet shall govern.

Radiography specified as random 10% or 20% etc. in the respective valve data sheet implies 10% or 20% etc. of number of valves ordered against each item number with a minimum of one valve against each item.

6.2 Radiography procedure, areas of casting to be radiographed shall be as per ASME B 16.34 and acceptance criteria shall be as per ASME B 16.34 Annexure-B. However for areas of casting to be radiographed for types of valves not covered in ASME B 16.34, vendor shall radiograph castings in line with ASME B 16.34.

6.3 For random radiography wherever specified in individual data sheets, the sampling shall be per size of the quantity ordered for each foundry.

6.4 Radiography wherever specified in the data sheets or as per clause 6.1 shall be done by X-ray / Gamma-ray to get the required sensitivity.

7. IBR CERTIFICATION

7.1 For valves described "IBR", valves shall be in accordance with the latest IBR (Indian Boiler Regulation) including the requirements specified in the specification.

7.2 For SW / BW end carbon steel valves under IBR, the chemical composition shall conform to the following:

Carbon (Max)	:	**0.25%**
Others (S, P, Mn)	:	**As per IBR**

7.3 Valves coming under the purview of "IBR"(Indian Boiler Regulations) shall each be individually accompanied by IBR certificate original in Form III-C duly approved by IBR authority / local authority empowered by the Central Boiler Board of India. Photocopy

of original certificate duly attested by the local boiler inspector where the supplier is located is the minimum requirement for acceptance.

7.4 All "IBR" valves shall be painted red in body-bonnet / body-cover joint.

8. MARKING

8.1 Valve markings, symbols, abbreviations etc. shall be in accordance with MSS-SP-25 or the standard referred in specification sheet as applicable. Vendor's name, valve rating, material designation, nominal size, direction of flow (if any) etc. shall be integral on the body.

8.2 Each valve shall have a corrosion resistant tag giving size, valve tag / code no., securely attached to the valve body.

8.3 Paint or ink for marking shall not contain any harmful metal or metal salts such as zinc, lead or copper which cause corrosive attack on heating.

8.4 Carbon Steel / Alloy Steel valves shall be painted with one coat of inorganic zinc silicate (minimum DFT 65 to 75 microns).

9. DESPATCH

9.1 Valve shall be dry, clean and free from moisture, dirt and loose foreign materials of any kind.

9.2 Valves shall be protected from rust, corrosion and any mechanical damage during transportation, shipment and storage.

9.3 Rust preventive on machined surfaces to be welded shall be easily removable with a petroleum solvent or shall not be harmful to welding.

9.4 Each end of valve shall be protected with the following materials:

Flange Face	:	Wood or Plastic Cover
Bevelled End	:	Wood or Plastic Cover
SW & SCRD. End	:	Plastic Cap

9.5 End protectors of wood / plastic to be used on flange faces shall be attached by at least three bolts and shall not be smaller than the outside diameter of the flange. However, plastic caps for SW & SCRD end valves shall be press fit type.

9.6 End protectors to be used on beveled end shall be securely and tightly attached.

9.7 For special service valves additional requirement for despatch shall be as prescribed in data sheet.

10. ATTACHMENTS

SS-PI-012_A1	:	Bypass Piping Arrangement
SS-PI-012_A2	:	Special Requirements for Low Temperature and Cryogenic Valves

BYPASS PIPING ARRANGEMENT
(SS-PI-012-A1)

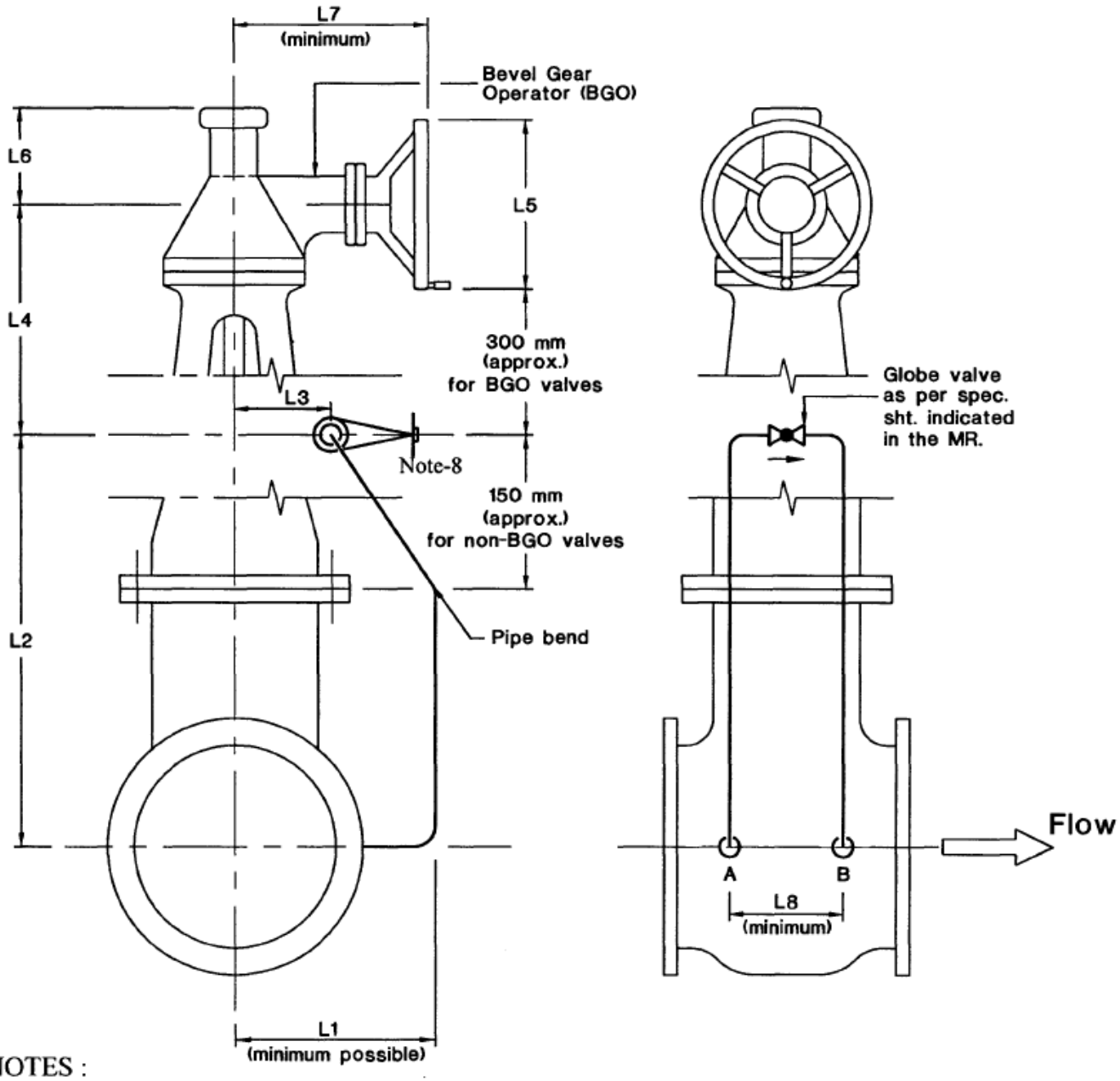

NOTES :

1. The orientation & location of hand wheel of bevel gear operator & the bypass arrangement shall be strictly as per this sketch.
2. The bypass connection ends shall be socket welded up to 600# and butt welded for 900#and above rating.
3. The bypass arrangement shall be properly clamped to & supported by the body of the main valve.
4. Basic design of bypass shall be to MSS-SP-45.
5. Material of bypass pipe & 90° elbows shall be same or equivalent to the body material.
6. Sketch is applicable for both BGO & NON-BGO Valves.

7. Vendor shall furnish dimensions L1 to L8.
8. Stem shall not be horizontal in the case of CRYO Valves

SPECIAL REQUIREMENTS FOR LOW TEMPERATURE & CRYOGENIC VALVES (SS-PI-012-A2)

11. SCOPE

All valves of Low Temperature Carbon Steel (LTCS) and all grades of austenitic (CRYO) materials are categorized as cryogenic valves. All these valves shall have extended bonnet as per BS 6364 except check valves.

Following qualification criteria shall be met by the valve vendors to quote valves for cryogenic services:

12. QUALIFICATION CRITERIA

I. Both cryogenic test (clause 2.1) and reference list (clause 2.2) together shall be for vendor qualification and vendor shall furnish the same, along with his offer.

II. Vendors who do not have cryogenic test reports and reference list covering valves of all materials and ratings required by MR, should confirm / furnish the following for consideration of their offer:

a. Evidence of having conducted successfully at least one cryogenic test as per BS 6364. Test certificate shall be furnished with the offer.

b. Vendor shall confirm to conduct cryogenic test per clauses 2.1 & 2.3 for the remaining valves not later than 12 weeks from the date of purchase order.

c. Vendor shall also furnish reference list for valves supplied for non-cryo service if reference list referred in 2.2.1 does not cover all the sizes of MR.

Offers of vendors who do not comply with above requirements would be rejected.

12.1 Cryogenic Test

Vendors to furnish copies of cryogenic test certificate for tests conducted as per given below:

12.1.1 Test shall be as per BS 6364.

12.1.2 Test temperature, unless specifically called for otherwise in the individual MR, shall be -45°C for LTCS and -196°C for all grades of austenitic stainless steel.

12.1.3 Tests carried out on a particular size of one type of valve, pressure rating and material shall qualify all sizes equal to and below the test valve size for the same type, pressure rating and material. In case of austenitic SS any one grade would qualify for all other grades of austenitic SS.

12.1.4 Tests should have been witnessed and certified by approved third party inspection agencies.

12.1.5 Cryogenic test need not be conducted for every order. Test conducted previously and witnessed by inspection agencies listed above shall be considered acceptable and need not be repeated.

12.2 Reference List

Vendor shall furnish reference list for valves supplied for cryogenic service indicating the name of client, year of supply, size, material, pressure rating, type of valve and quantity.

12.3 Post Order Testing Procedure

12.3.1 Before conducting post order testing, vendor shall submit the following for approval:

a. Test procedure (as per BS 6364).

b. Cross-section drawing of the valve with material of construction.

c. Schematic of test rig (as per BS 6364) with complete details.

12.3.2 Test has to be conducted irrespective of the service on largest size for each type of valve and for each material and class rating. Vendor shall offer one, two or three valves for selection of test valve by inspector depending upon whether quantity of largest valve in the order is one, two or three and more than three respectively.

In the event of failure of the test valve to meet the specification requirements, the vendor shall conduct test on two more valves. These two valves which pass test successfully, are of lower size, then the qualification will be valid only to sizes upto which test has been conducted successfully.

12.3.3 In case of non-conductance of cryogenic test(s) within 12 weeks or failure in the test(s) conducted after receipt of order, the owner reserves the right to invoke any of the of the purchase order including cancellation of the purchase order at the risk and cost of vendor.

13. Bonnet extension, wherever specified in the valve sheet to BS 6364 shall be for "non cold box application" unless otherwise specified in the MR. Even if not called for in valve sheet, valves indicated as "LT" or "CRYO" shall be supplied with bonnet extension.

14. Bonnet and Gland extension joints shall be of butt welded/integrally cast construction.

15. Repair welding procedure for austenitic stainless steel valves in "CRYO" service shall have to be qualified for impact test as per ASME B31.3. Minimum acceptable impact energy shall be 20 J or lateral expansion of 0.38 mm at temperature of -196°C.

16. Wherever impact test of SS studs / nuts is called for in the data sheet, the impact value shall be 27 J at the intended service temperature specified in the data sheets.

ENERGISING QUALITY

VCS QUALITY SERVICES PVT. LTD.

STANDARD SPECIFICATION
FOR
GAS OVER OIL ACTUATOR

VCS-SPC-5205

00	05.05.2022	ISSUED AS STANDARD	VK	SV	DGM	KNC
Rev. No	Date	Purpose	Prepared By	Checked By	Approved By	Approved By

ABBREVIATION

ANSI	American National Standards Institute
API	American Petroleum Institute
ASME	American Society of Mechanical Engineers
ASTM	American Society of Testing and Materials
BS	British Standard
FAT	Factory acceptance Test
IEC	International Electro-technical Commission
OD	Outer Diameter
NACE	National Association of Corrosion Engineers
ISO	International Organization for Standardization
NACE	National Association of Corrosion Engineers
IP	Ingress Protection
ISO	International Organization for Standardization
SAT	Site Acceptance Test
SS	Stainless Steel
NPT	Nominal / National Pipe Thread

CONTENTS

1.0 SCOPE 4
2.0 DEFINITIONS 4
3.0 REFERENCE DOCUMENTS 5
4.0 MATERIAL 6
5.0 DESIGN 6
6.0 FABRICATION AND PAINTING 8
7.0 INSPECTION AND TESTING 8
8.0 MARKING, PACKING AND SHIPMENT 11
9.0 SPARES AND ACCESSORIES 11
10.0 DOCUMENTATION 12

1.0 SCOPE

This Standard Specification, together with the Data Sheets attached herewith, establishes the minimum technical and functional requirements for design, engineering, materials, fabrication, inspection and testing, documentation, marking, packing and shipping of Gas over Oil Actuator along with its accessories.

2.0 DEFINITIONS

For the purpose of this document, the words and expressions listed below shall have the meanings assigned to them as follows:

Owner/ Purchaser/ Company	Owner of the particular Project (Project Specific).
Consultant	The party which comes out all or part of the engineering, procurement, construction, pre-commissioning and assistance for commissioning, monitors and controls the overall project management.
Bidder/ Manufacturer / Supplier / Vendor	The party(s) which manufactures and / or supplies material, equipment, technical documents / drawings and services to perform the duties specified by Contractor.
Works/ Shop	The place where the ITEM / UNIT is fabricated and tested and transported to Purchaser.
Datasheet	Technical data provided by the Purchaser / Owner / Company.
Standard Specification	Specifications Developed as Standard by the Company.
Job Specification	Specifications Developed pertaining to particular project / Job in regard.
Material Requisition	Requisition as raised to Supplier for Quotation of the item
Purchase Requisition	Requisition as raised to Supplier for Procurement of the item
Purchase Order	Legal Order supplied to Supplier for procurement of the Engineered Item
Site	The work place where the equipment is installed and commissioned.

3.0 REFERENCE DOCUMENTS

3.1 Codes & Standards

The related standards referred to herein and mentioned below shall be of the latest editions prior to the date of the Purchaser's enquiry.

American Society for Mechanical Engineers (ASME)

ASME B 1.20.1	Pipe Threads, General Purpose (Inch)
ASME B31.3	Process Piping
ASME B 31.4	Pipeline transportation systems for liquid hydrocarbons and other liquids
ASME B 31.8	Gas Transmission And Distribution Piping Systems
ASME B16.5	Pipe flange and flange fittings Valves Flanged, threaded and weld ended
ASME Sec V	Non - destructive examination
ASME Sec VII Div-1	Rules for construction of Pressure Vessels
ASME Sec VIII	Boiler and Pressure Vessels code & Sec- IX
ASME Sec IX	Welding and Brazing qualification

American Petroleum Institute (API)

API 6D	Specification for Pipeline valves

British Standards

BS 5500	Unfired fusion welded pressure vessels

International Electro-technical Commission (IEC)

IEC 60079	Electrical apparatus for explosive gas atmosphere
IEC 60529	Degrees of protection provided by enclosures (IP Code)

National Association for Corrosion Engineers

NACE MR-0175	Material Requirements - Sulphide Stress Cracking Resistant Metallic Materials for Oilfield Equipment

3.2 Order of Precedence

In the event of conflict between Specifications, Data Sheets, related standards, codes etc., and the order of precedence shall be as follows:

a. Data sheets

b. Job Specifications

c. Standard Specifications

d. Codes and Standards

Vendor shall refer the matter to the Purchaser for clarification and only after obtaining the approval in writing, the same should proceed with the manufacture of the items in question.

4.0 MATERIAL

Materials selected shall be in accordance with the Data Sheets and Company's Standard specifications. For Corrosion service the material selected shall be in compliance with the requirements of NACE MR-0175 / IS0-15156 latest editions.

5.0 DESIGN

The following design requirement covers the general requirements of Gas over Oil Actuator. But for the exact requirements and applications, the relevant specific project Specifications and design basis shall be referred and complied.

5.1 General

The basic requirements for Actuators are as follows:

a. Actuator shall be Gas over Oil type, quarter turn operation type.

b. Actuator torque shall be, minimum 1.25 times the maximum valves break torque required at full rated differential pressure of valve.

c. Vendor shall indicate actuator model no., valve torque and actuator torque figures in a tabular form along with the quotation. Vendor shall submit the form for Buyer's review.

The torque figure shall be expressed in Newton Metres (NM) and shall be given for the following valve positions:

i. Start to open torque (Breakaway torque)

ii. Lowest running torque during opening of the valve

iii. End of opening torque (Valve fully open)

iv. Start to close torque (Breakaway torque)

v. Lowest running torque during closing of valve

vi. End of closing torque (Reset torque, valve fully closed)

In addition, the maximum torque the valve shaft can withstand shall be stated. The results of the actuator sizing calculations, together with the selected actuator type / size and above stated torque figures, shall be submitted for approval.

d. Pneumatic connections shall be of 3/8" NPT (F) size as minimum. Pneumatic tubing shall be SS-316L, 3/8" 00 x 0.065" WT minimum, exact size shall be decided based on actual requirements.

e. Valve with actuator shall be suitable for installation in horizontal pipeline.

f. All Pneumatic tube fittings shall be of SS-316L and of SWAGELOK / PARKER make.

g. All accessories as applicable shall be mounted on the SS back plate, which in turn shall be mounted on the actuator.

h. Actuators shall be equipped with adjustable stoppers for opening and closing of the valves. At normal operating conditions these stoppers at the actuators shall be limiting the opening and closing of the valves

i. The actuator local control panel shall be weatherproof to IP-66 as a minimum. The logic components / tubing inside the panel shall be of SS-316L materials as minimum. All the electrical components mounted inside the panel shall be intrinsic safe and shall be certified by a statutory body like UL / BASEEFA or Equal.

Local/ Remote selector switch shall be provided on the actuator control panel for local/

Remote operation.

The Control logic shall enable the following:

a. Local and Remote operation of the Valve.

b. Local Function shall include open/close facilities.

c. Remote function shall facilitate remote closure and opening of the valve (without any manual intervention if all the process interlocks are met). In case electrical signal to solenoid valve fails, the valve shall remain in the last position and shall not be "Closed" i.e. "Stay Put Position".

d. Manual local hydraulic operation of the valve, with hand pumps, in case of non-availability of the pneumatic (gas).

e. High differential pressure inhibit switch shall inhibit the operation of the valve, when the differential pressure becomes high.

f. Close command (or open command) shall be inhibited during valve opening (or valve closing) and be made effective only after 100% opening (or closing) is achieved.

Gas storage tank and Hydraulic cylinders shall be sized so that the Actuator / operator shall be capable of minimum, two open & close operations in the event of loss of line pressure.

Vendor shall supply gas filter regulators to derive power gas pressure to required level for the operation of the logic. Actuator sizing shall be based on minimum gas pressure as indicated in Data Sheet.

Solenoid Valves shall be mounted inside the actuator control panel for the remote open/close operation of the Valve actuators. Solenoid Valves shall be intrinsically safe and certified.

Proximity type switches shall be provided for indication of Valve position. These shall be mounted in intrinsic safe enclosure and certified.

The switch shall be intrinsically safe and certified.

All equipment and accessories shall be tropicalized and provided with anticorrosion protection, suitable for use in corrosive atmosphere.

Steel castings, if any, of actuators shall be radio graphically examined.

The opening / closing timings for gas over oil-actuated valves shall be 10-40 seconds unless otherwise specified.

Material for Studs shall be ASTM A193, Grade B7 and Nuts material shall be ASTM A 194 Grade 2H.

Vendor shall provide the following contacts for Purchaser's use.

a. Local/Remote selector switch in REMOTE position

b. High differential pressure

c. Valve OPEN indication

d. Valve CLOSE indication

All the contacts and the "Remote Open & Closed" commands shall be provided at a terminal block in the actuator control panel.

Vendor shall provide 6 Nos. plus one spare W' NPT (F) cable entry on the Actuator control panel.

5.2 Name Plate

Each Control Valve shall have a SS name plate attached firmly to it at a visible place, furnishing the following information:

a. Tag number as per Data Sheet

b. Body and port sizes in inches.

c. Stem travel in millimeters

d. Action on air failure

e. Spring range

f. Air supply pressure.

g. Manufacturer's model number for the Valve body, actuator and positioner.

6.0 FABRICATION AND PAINTING

Vendor shall obtain approval in writing from the Purchaser before start of fabrication of Gas over Oil Actuator. Vendor shall submit the required Specification, drawings & documents for approval. Also Vendor shall refer the relevant codes and standards for manufacturing herein. Painting of Gas over Oil Actuator Shall be in accordance with Standard Painting Specifications.

All equipment's and Valves shall be coated with anticorrosive paints for a corrosive, near shore environment. Vendor in compliance with the written procedures recommended by the Manufacturer shall prepare his own coating procedures including surface preparation and application of coating and curing. Vendor's painting/coating system shall be submitted along with the bid for Purchaser's review and approval. All material shall be new, clean and free from rust, pits and obvious defects

7.0 INSPECTION AND TESTING

Vendor shall perform all inspection and testing as per job Specification requirements, and as per relevant codes, prior to shipment. The inspection and testing for Gas over Oil Actuator shall be carried out as per approved Inspection and Test Plan. Vendor shall submit the Inspection and Testing Plan for Proprietary items / Special items for Approval.

Vendor shall submit the test certificates to the Company for the tests conducted during the manufacturing process like hydro test, material test, hazardous area certification test, calibration test and any other before Factory Acceptance Testing (FAT).

7.1 Factory Acceptance Testing (FAT)

Prior to FAT, Vendor shall submit to the Company a detailed FAT procedure, for review and approval, listing all the Gas over Oil Actuator complete with the project approved tags, and highlighting the inspection and testing requirements of all such devices. FAT shall be carried out as per approved Inspection and Test Plan. FAT shall be carried out prior to shipment of the Gas over Oil Actuator.

FAT procedures shall be submitted at least 4 weeks prior to FAT testing taking place. FAT shall be carried out at the manufacturing facilities. The tests shall be witnessed by the Company or their approved representative. FAT procedure will be signed off by the

Vendor and Company or their approved representative at the successful completion and conclusion of testing.

The FAT shall be consisting of the following as a minimum:

a. Visual Inspection

b. Dimensional check

c. Chemical and mechanical properties as per relevant material standards.

d. d. Calibration

e. Actuator functional test shall be carried out by mounting the actuator on a test rig and applying the pneumatic fluid pressure. The actuator shall be successfully stroked at least five times for open and close by suitably applying the pneumatic fluid pressure. Actuator position indication shall be checked for correct operations during the test.

f. Non-destructive examination of individual actuator material and components consisting of but not limited to castings, forgings, plate and assembly welds shall be carried out by the Manufacturer.

g. All casting of pressure containing parts shall be radio graphically examined as per ASTM E94 and E186 / E280 or E446 as applicable, at quality level 2-2T. Category A, B or C defects shall not exceed the severity level for Class 2. Category D, E, F or G defects shall not be accepted.

   i. All forgings shall be ultrasonically examined to ASTM E609. Quality 1 will be the minimum level of acceptance.

   ii. All machined surfaces shall be liquid penetrant examined as per ASTM E165. Surface discontinuities shall not be acceptable.

   iii. Sealing areas within the actuator body shall be completely inspected by magnetic particle methods in accordance with ASTM E709. Surface discontinuities shall not be acceptable

Complete actuator housing with internals including the open / close hydraulic circuits of all actuators shall be subjected to a hydrostatic pressure test by applying 1.5 times

the actuator design pressure for a minimum period of 2 hours. Chart recorder shall monitor pressure. No leakage shall be permitted during the hydrostatic test.

h. Valve / Actuator assembly test

i. Any other tests

After testing of individual actuators has been completed, the actuators shall be mounted on Valves. Integrated Valve and actuator tests shall be carried out at the Valve Manufacturer's Works, in compliance with the requirements stated in Purchaser Specification for Ball Valves enclosed with the Material Requisition/Purchase Order.

A certificate to detail the results and records obtained during the FAT shall be made available for ratification by the Vendor on the date of test. Following certificates shall be submitted by the Vendor:

a. Mill test certificates relevant to the chemical analysis and mechanical properties of the materials used for the actuator pressure containing parts as per the relevant standards and Specifications.

b. NDT reports for radiography, ultrasonic, magnetic particle and liquid penetrate inspection.

c. Test report on operation of actuators including operating time.

d. Test report on hydrostatic test of actuators.

e. Test report on actuator/valve assembly tests.

f. All other actuator test reports and certificates as required by this Specification.

The certificates shall be valid only when signed by Purchaser's Inspector. Only those actuators which have been certified by Purchaser's Inspector shall be dispatched from Manufacturer's works.

7.2 Site Acceptance Testing (SAT)

A SAT shall be carried out on completion of the installation of the equipment at site which shall be witnessed by the Company / Owner's representative. SAT shall be performed on the Gas over Oil Actuator as per the approved test procedure. A comprehensive test procedure in compliance with the Standard Specification shall be developed and issued to Company / Owner for review and approval.

The Site Acceptance Test (SAT), in general, shall demonstrate that the Gas over Oil Actuator functions correctly and properly in accordance with the specified requirements.

Actuator shall be mounted on the valve and tested as follows:

(For buried valves stem extension shall be installed before testing)

a. Cycle (open and shut) each valve with its actuator, at least five (5) times to ensure smoothness of operation. Valve / Operator shall be adjusted and tested for 100% opening and closing at actuator stoppers. It shall be tested for both Local/Remote operations.

b. Apply the actual differential pressure as given in the Data Sheet, across the Valve and check the Valve operation. Valve operation should not be jerky or binding. This

shall be repeated at least 3 times and shutdown time noted at minimum supply pressure.

c. The electrical signal to the solenoid Valves on the actuator control panel shall be disconnected and Valve shall be tested for stay put conditions.

d. Test shall be witnessed by Purchaser or their representatives.

e. Final testing and approval made by Purchaser's representative inspector shall not relieve the Manufacturer from his own responsibilities, guarantees and contract obligations.

8.0 MARKING, PACKING AND SHIPMENT

Following FAT completion, Vendor responsible for Gas over Oil Actuator shall ensure that all equipment and associated materials and accessories are designed properly, marked and packed, and secured for transit to site without damage.

Vendor shall provide and submit his standard 'Marking, Packing and Shipping Procedures' for review by Company / Owner.

Vendor shall specify any conditions, normal or special, to be verified in intermediate storage and during transport.

Equipment shall be suitably packed including any dismantling, transit fastening and bracing necessary to prevent distortion or damage during transit.

Adequate protection shall be provided to prevent mechanical damage and atmospheric corrosion in transit and at the job site.

After inspection and testing, equipment shall be completely free of water and dry before start of preparation for shipment.

Preparation for shipment and packing will be subject to inspection and rejection by Company's / Contractor's inspectors. All costs occasioned by such rejection shall be to account of the Vendor.

9.0 SPARES AND ACCESSORIES

The following spare philosophy shall be followed in case it is not covered in Job Specification.

The Vendor shall include recommended spare parts list for start-up, pre-commissioning and two years operation as per the following:

a. Itemized recommended spare parts list for start-up and pre-commissioning.

b. Itemized recommended spare parts list for two years operation.

Vendor shall recommend accessories and special tools required for operation and maintenance of Gas over Oil Actuator, for Company review.

All the spare parts furnished by Vendor shall be wrapped and packaged to preserve an original as-new condition under normal conditions of storage. The same parts shall be properly tagged with stainless steel tags and coded so that later identification as to their intended equipment usage shall be clear.

All items supplied shall be packaged separately and clearly marked as "Spare Parts" and shipped with the equipment.

10.0 DOCUMENTATION

The following documentation shall be fulfilled by the Vendor, if it is not covered in Job Specification.

10.1 Documentation Required with Technical Bid

During bidding stage Vendor shall submit in his offer the following documents as a minimum:

a. Specification, Data Sheets

b. Bill of Materials including Vendor list, details for third party items

c. Catalogues and manuals

d. Test procedures

e. Quality Assurance Plan

f. Control Valve sizing calculations

g. Outline drawings of the assembled unit, showing dimensions, dismantling areas and weights

h. Material of construction of all components of Valves

i. Site Planning, Erection and Installation Procedures

10.2 Documentation Required for Approval

Upon placement of Purchase Order, Vendor shall submit as a minimum the following drawings, documents and Specifications for the Company's approval:

a. Specifications, Data Sheets

b. Bill of Materials including Vendor list, details for third party items

c. Catalogues, manuals and relevant drawings and documents

d. Dimensional drawings

e. Calibration certificates

f. Material test certificates

g. Procedures for FAT

h. Quality Assurance Plan

i. Field test procedures for existing Valves

j. Functional diagram (pneumatic, hydraulic and electric) pointing out external connections.

10.3 Guarantee / Warranty

Vendor shall guarantee that the complete scope of supply shall be safely and reliably meet all of the requirements of this Company Specification.

Vendor shall provide warranty support for a period of 12 months from the date of supply or 18 months from the date of manufacturing. Warranty shall apply to defective material workmanship and facility design. Warranty work shall be done at

Owner's local facilities. The cost of correction I replacement of any warranty items shall be borne by the Vendor.

The job Specifications / Data Sheets shall be referred for any specific warranty I guarantee.

PIPING MATERIAL SPECIFICATION

D1	18.05.2022	ISSUED FOR BID	SR	AK	MC
REV	**DATE**	**DESCRIPTION**	**PREP**	**CHK**	**APPR**

TABLE OF CONTENTS

1.0 SCOPE 3
2.0 CODES AND STANDARDS 3
3.0 MATERIAL SPECIFICATION 3
4.0 CLASS DESIGNATION CODE 3
5.0 PIPELINE 3
6.0 PIPING 4
7.0 FITTINGS 4
8.0 BENDS 4
9.0 FLANGES 4
10.0 GASKETS 5
11.0 BOLTING & THREADS 5
12.0 THREAD SEALANT 5
13.0 VALVES 5
14.0 QUICK OPENING END CLOSURE 6
15.0 HYDROTESTING VENTS AND DRAINS 6
16.0 PIPELINE SPECIATLITY ITEMS 6

1.0 SCOPE

This specification covers the requirements of various piping materials used in piping/ pipeline system handling natural gas/ Re-gasified Liquid Natural Gas (RLNG) and associated utilities in the pipeline.

2.0 CODES AND STANDARDS

2.1 Pipeline and terminal facilities envisaged as a part of this project shall be designed and engineered primarily in accordance with the provision of ASME B 31.8 – Gas Transmission & Distribution Piping System – Latest edition and OISD Standard 226-Natural Gas Transmission Pipeline and City Gas Distribution Networks.

2.2 All codes standards and specifications referred herein shall be the latest edition of such documents.

2.3 For sake of brevity, the initials of the society to which the codes are referred are omitted in the specification, for example, B16.5 is a code referring to ANSI/ASME, A 105 is a code referring to ASTM.

2.4 In addition, VCS specifications for various piping and pipeline materials shall also be applicable.

3.0 MATERIAL SPECIFICATION

Piping materials specifications are classified for the general purpose of selection of material for the class of services. The maximum design pressure and design temperature together with the fluid in line governs the selection of material specifications. Deviation of materials from class specifications may occur due to specific design condition. These deviations are permissible if they are equal or better than the individual class requirements.

4.0 CLASS DESIGNATION CODE

The piping class designation shall generally consist of three digits numbering system made up of letter, number and letter e.g. A1A, B1A, D1A, etc as follows:

First letter indicates ANSI class rating e.g.,

A - Class150

B - Class 300

D - Class 600

The middle number indicates differences in the specification within the same rating and material.

The last letter indicates type of material e.g.

A- Carbon Steel

5.0 PIPELINE

The material for line pipe shall be as per the requirements of specification as indicated in Table-1.

6.0 PIPING

6.1 Carbon steel pipe shall be made by open hearth, electric furnace or basic oxygen process only. The steel used shall be fully killed and made with fine grain structure. The grade and wall thickness of various sizes of pipes shall be as per piping material specification for the applicable class.

6.2 Pipe dimensions shall be in accordance with ANSI B 36.10 for carbon steel pipes and ANSI B 36.19 for stainless steel pipes.

6.3 All pipe threads shall conform to American Standard taper as per ANSI B 1.20.1 NPT, unless otherwise specified.

6.4 For butt weld end, bevel shall be in accordance with ANSI B 16.25/ API 5L as applicable.

7.0 FITTINGS

7.1 Fully killed carbon steel shall be used in the manufacture of fittings.

7.2 Threaded joints, if used, shall conform to American Standard taper as per ANSI 1.20.1 NPT.

7.3 Dimensions of socket welded/screwed fittings shall conform to ASME B 16.11.

7.4 Dimensions of butt welded carbon steel fittings shall be as per ASME B 16.9/ MSS-SP-75, as applicable.

7.5 Bore of socket welded fittings shall suit outside diameter (OD) of pipe and its thickness.

7.6 Butt welding ends shall conform to ANSI B 16.25/ API 5L. In case of difference in thickness of matching ends, requirements of ASME B 31.8 shall apply.

7.7 Integrally reinforced forged branch fittings such as Sockolet, Threadolet, Weldolet, Nippolet etc. shall be as per MSS-SP-97. Fittings not covered in ASME B16.9 and MSS-SP-97 shall conform to manufacturer's standard.

7.8 Fittings thickness tolerances shall match pipe thickness tolerance.

8.0 BENDS

8.1 Unless otherwise specified for process piping, elbow of radius R = 1.5 D shall only be used.

8.2 The radius of cold field bends shall not be less than 30 times the nominal diameter for pipes upto nominal diameter of 16" and shall not be less than 40 times the nominal diameter for pipes of nominal diameter of 18" and above. Limited use of long radius bends (R = 6D) may be permitted for reason of space constraints.

9.0 FLANGES

9.1 Flange rating shall be same as ANSI B 16.5/ MSS-SP-44/ B 16.47 series A as specified.

9.2 Dimensions of flanges shall be in accordance with ANSI B16.5/ B16.47 Series A, as applicable.

9.3 Neck of weld neck (WN) flanges shall suit pipe bore and thickness.

9.4 Bore of socket welded (SW) flanges shall suit pipe O.D. and its thickness.

9.5 Threads for screwed flanges, if used, shall conform to American Standard taper as per ANSI B 1.20.1 NPT.

9.6 Sizes for blind flanges shall be indicated by nominal pipe size and schedule.

9.7 Carbon steel flanges faces shall have smooth finish as indicated in the material specification. Flanges faces shall have smooth finish to 125-250 micro inches AARH as per MSS-SP-6.

9.8 Butt welding ends of WN flanges shall conform to ANSI B 16.25.

9.9 Spectacle blind/spacer & blinds shall be in accordance with ASME B 16.48/ manufacturer's standard. Spectacle blind shall be used for sizes up to 8" NB and spacer & blind for 10" & above shall be used.

9.10 Two jack screws 180° apart shall be provided for all spectacle blind assemblies. The jack screws shall be as per VCS's standard.

10.0 GASKETS

10.1 Spiral wound metallic gasket shall conform to B 16.20 and API 601 shall be provided with graphite filler. All spiral wound gaskets shall be provided with stainless steel centering ring.

11.0 BOLTING & THREADS

11.1 Nuts for stud bolts shall be American Standard Hexagon Heavy Series and double chamfered.

11.2 Dimension and tolerances for stud bolts and nuts shall be as per ANSI B 18.2.1 and 18.2.2 with full threading to ANSI B 1.1 Class 2A thread for bolts and Class 2B for nuts. Diameter and length of stud bolts shall be as per ASME B 16.5/ASME B16.47 with full threading.

11.3 Threads for nuts shall be as per ANSI B 1.1 as follows,

Nuts for stud bolts dia ¼" to 1"	:	UNC-2B
Nuts for stud bolts dia 1⅛" to 3¼"	:	8UN-2B

11.4 Threads for stud bolts shall be as per ANSI B 1.1, as follows:

Stud bolts dia ¼" to 1"	:	UNC-2A
Stud bolts dia 1⅛" to 3¼"	:	8UN-2A

11.5 Heads of jack screws shall be heavy hexagonal type. Jack screw end shall be rounded. Stud bolts shall be fully threaded with two hexagonal nuts.

12.0 THREAD SEALANT

12.1 Threaded joints shall be made with 1" wide PTFE jointing tape.

13.0 VALVES

13.1 Valve ends shall be as per piping material specifications (Appendices).

13.2 Flange dimensions and face finish of flanged end valves shall conform to clause 9.0 of this specification.

13.3 Butt welding ends of Butt Welded valves shall conform to ANSI B 16.25.

13.4 Face to face and end to end dimensions shall conform to applicable standards.

13.5 Buried valves on mainline shall be provided with stem extension, sealant, vent/drain & shall have butt welded ends.

13.6 Sectionalizing Valves (Block valves) installed on the main pipeline shall be Ball valves

with butt welded ends and shall be full bore to allow smooth passage of cleaning pigs as well as intelligent pigs.

13.7 Unless specified otherwise valves shall confirm to the following standards:

Screwed/ Socket welded/ Flanged end valves (1½" and below)

Ball Valves	:	BS 5351 (latest)
Plug Valves	:	BS 5351 (latest)
Globe Valves	:	BS 5351 (latest)
Gate Valves	:	API 602 (latest)

Flanged/ Butt weld end valves (2" and above)

Ball Valves	:	API 6D
Plug Valves	:	API 6D
Check Valves	:	API 6D
Globe Valves	:	BS 1873
Gate Valves	:	API 6D

13.8 Manual Valve operators shall be as indicated below, unless specified otherwise in the P&ID.

a) Gate Valves

For ANSI class 150 and 300	Hand wheel operated for size ≤ 12" NB. Gear operated for size ≥ 14" NB.
For ANSI class 600	Hand wheel operated for size ≤ 10" NB. Gear operated for size ≥ 12" NB.

b) Ball and Plug Valves

For ANSI class 150, 300, 600 and 900 - Wrench operated for size ≤ 4" NB.

Gear operated for size ≥ 6" NB.

c) Actuated Valves – Actuated valves shall be as per P & ID.

14.0 QUICK OPENING END CLOSURE

Quick opening end closure to be installed on scraper traps shall be equipped with safety locking devices in compliance with section VIII, division 1, UG-35.2 of ASME Boiler and Pressure Vessel code.

15.0 HYDROTESTING VENTS AND DRAINS

High point vents and low point drains required for the purpose of hydro testing shall be of size 3/4” and consist of sockolet, plug/ ball valve for vent, globe/ ball valve for drain, flange & blind flange.

16.0 PIPELINE SPECIATLITY ITEMS

Pipeline specialty items viz. scraper traps, flow tees, insulating joints, LR bends, QOEC for venting shall be as per respective data sheets, specifications and project specific drawing showing mainline & terminal materials.

TABLE-1

PIPE WALL THICKNESS DETAILS FOR MAINLINE/ SPURLINE

Sl. No.	Pipe Material Description	Size (NB)	Thickness (mm)	Length
1	API 5L Gr. X-70, PSL-2	12″	7.14	As per SOR Quantity
2	API 5L Gr. X-70, PSL-2	12″	8.38	As per SOR Quantity
3	API 5L Gr. X-70, PSL-2	12″	9.537	As per SOR Quantity

TABLE-2

INDEX OF PIPING MATERIAL SPECIFICATIONS

Class	Service	C.A. (mm)	Basic material	Design Code	Enclosed as
D1A	Natural Gas	1.5	ASTM A 106 Gr. B/ API 5L Gr. B	ASME B31.8	Appendix-I
D4A	RLNG	1.5	ASTM A 333 Gr. 6	ASME B31.8	Appendix-II
B1A	Natural Gas	1.5	ASTM A 106 Gr. B/ API 5L Gr. B	ASME B31.8	Appendix-III
B4A	RLNG	1.5	ASTM A 333 Gr. 6	ASME B31.8	Appendix-IV
A1A	Natural Gas	1.5	ASTM A 106 Gr. B/ API 5L Gr. B	ASME B31.8	Appendix-V
A4A	RLNG	1.5	ASTM A 333 Gr. 6	ASME B31.8	Appendix-VI

APPENDIX - I

ANSI CLASS	:	**600# (D1A)**
BASE MATERIAL	:	Carbon Steel (Material Group 1.1)
CORROSION ALLOWANCE	:	1.5 MM
SPECIAL REQUIREMENT	:	Non IBR

TEMPERATURE (Deg. C) AND PRESSURE (Kg/Sq.cm g) RATINGS

TEMP	-29	38	50	100	150	200	250
PRESS	104.14	104.14	102.2	95.04	91.97	89.35	85.07

SERVICE

Natural Gas, Utilities (water, inst. air, plant air, nitrogen gas, carbon dioxide)

NOTES

1. All vents and drains shall be provided with plug valve unless mentioned otherwise in P&IDs.
2. Fittings shall be of seamless construction up to 16” and shall be of welded construction 18” and above.
3. Wall thickness for line pipe used in various sections shall be as per Table-1 of PMS.
4. Ball valve to be used in mainline shall have butt welded ends except for the valves used for hot tapping which shall be one side butt welded and other side flanged.
5. Procurement of materials shall be as per detailed relevant specifications.
6. Design pressure and temp. for pipeline and related facilities are 92 kg/cm^{2}g & (-29° to +65° C) respectively.
7. Pressure-temperature ratings indicated are for flanges only in accordance with ANSI B 16.5.
8. For valves, steel pipe and associated steel components of 2” and larger notch toughness properties shall be as specified in relevant specifications/ codes, VCS’s standard technical specifications and data sheets etc.
9. At stations, branch connections shall be as per branch connection table below.
10. All Butt welds shall be 100% radiographed.
11. 100% of socket weld shall be subjected MPI/ DPT.

12. Pressure-Temperature rating of valve body shall be as per API 6D.
13. Pipeline design code – ASME B 31.8 & OISD 226.
14. For pipeline specialty items (scrapper trap, flow tee, IJ, LR Bends etc.) and their material descriptions refer data sheet of respective items.

STATION PIPING MATERIAL SPECIFICATIONS

ITEM	SIZE	DESCRIPTION
Maintenance joints	ALL	Flanged, to be kept minimum
Pipe joints	1.5" & BELOW	Socket Weld
	2.0" & ABOVE	Butt welded
Drains	ON LINES <= 1.5"	Refer std. SD-PI-019
	ON LINES >= 2.0"	As per P&ID or 0.75". Refer std. SD-PI-018
Vents	ON LINES <= 1.5"	Refer std. SD-PI-019
	ON LINES >= 2.0"	As per P&ID or 0.75". Refer std. SD-PI-018
Temp. Connection	1.5"	Flanged, installation as per std. SD-PI-014 & 015, except skin temperature measurement.
Press. Connection	0.75"	SW nipple with Plug/ Ball Valve to spec. as per Refer std. SD-PI-011, 012 & 013

BRANCH TABLE

											T	14
										T	T	12
									T	T	T	10
								T	T	T	T	8
							T	T	T	T	T	6
						T	T	T	T	W	W	4
					T	T	T	W	W	W	W	3
				T	T	T	W	W	W	W	W	2
			T	T	S	S	S	S	S	S	S	1.5
		T	T	T	S	S	S	S	S	S	S	1
	T	T	T	T	S	S	S	S	S	S	S	0.75
T	T	T	T	S	S	S	S	S	S	S	S	0.5
0.5	0.75	1	1.5	2	3	4	6	8	10	12	14	

BRANCH PIPE

RUN PIPE

CODE DESCRIPTION

T	TEES
W	WELDOLETS
S	SOCKOLETS

PIPELINE/ PIPING DESIGN CODE		ASME B 31.8/ OISD 226									DESIGN FACTOR – 0.5								
ITEM	NOMINAL DIAMETER (INCHES)	0.50	0.75	1.00	1.50	2.00	3.00	4.00	6.00	8.00	10.0	12.0	14.0	16.0	18.0	20.0	24.0	28.0	30.0
PIPE	WALL THICKNESS (MM/SCH)	S160	S180	S80	S80	S80	XS	XS	XS	14.3	XS	S60	14.3	17.5	S60	S60	19.1	22.2	23.8
	MATERIAL	ASTM A 106 GR.B				ASTM A 106 GR.B (CHARPY)				API 5L GR.B PSL2	API 5L GR.X-52 PSL2								
	DIMENSION STD.	B 36.10								API 5L									
	METHOD OF MAUFACTURE, ENDS	SEAMLESS PE				SEAMLESS BE								BE SAW					
FLANGE	MATERIAL AND GRADE	ASTM A 105				ASTM A 105 (CHARPY)					ASTM A 694 GR. F-52 (CHARPY)								
	TYPE, FLANGE FACING	SW. RF 125 AARH				WN. THICKNESS TO MATCH PIPE THICKNESS, RF 125AARH													
	DIMENSION STD.	B 16.5												B 16.47 A					
BLIND FLANGE	MATERIAL AND GRADE	ASTM A 105				ASTM A 105 (CHARPY)													
	FLANGE FACING	RF 125 AARH																	
	DIMENSION STD.	B 16.5												B 16.47 A					
BLANK	MATERIAL AND GRADE	ASTM A 105				ASTM A 105 (CHARPY)								ASTM A 516 GR. 70					
	FLANGE FACING	RF 125 AARH																	
	DIMENSION STD.	B 16.48												MNF' STD					
	TYPE	FIG. 8 FLANGE									SPACER & BLIND								
BOLTING	STUD BOLTS (FULLY THREADED)	A 193 GR B7, B-18.2																	
	NUTS (HEAVY HEXAGONAL)	A 194 GR 2H, B-18.2																	
GASKET	TYPE, MATERIAL AND DMN STD.	SPIRAL 600#, SP. WND SS316+GRAPHITE FILLED, B-16.20-ANSI B16.5																	
ELBOW-90 ELBOW-45	MATERIAL	ASTM A 105				ASTM A 234 GR.WPB (CHARPY)					MSS-SP-75 GR. WPHY-52								
	END DETAIL	SW,6000#		SW,3000#		BW, 1.5D													
	DIMENSION STD.	B-16.11				B-16.9					MSS-SP-75								
T-EQUAL T-RED	MATERIAL	ASTM A 105				ASTM A 234 GR.WPB (CHARPY)					MSS-SP-75 GR. WPHY-52								
	END DETAIL	SW,6000#		SW,3000#		BW													
	DIMENSION STD.	B-16.11				B-16.9					MSS-SP-75								
CAP	MATERIAL	ASTM A 105				ASTM A 234 GR.WPB (CHARPY)					MSS-SP-75 GR. WPHY-52								
	END DETAIL	SCRF6000		SCRF3000		BW, THICKNESS TO MATCH PIPE THICKNESS													
	DIMENSION STD.	B-16.11				B-16.9					MSS-SP-75								
FITTING	MATERIAL	ASTM A 105				ASTM A 234 GR.WPB (CHARPY)					MSS-SP-75 GR. WPHY-52								
	END DETAIL	SW,6000#		SW,3000#		BW, THICKNESS TO MATCH PIPE THICKNESS													
	DIMENSION STD.	B-16.11				B-16.9					MSS-SP-75								
	TYPE	COUPLING FULL, HALF LH. RED.				RED. CON. RED. ECC.													
O'LET	MATERIAL	ASTM A 105				ASTM A 105 (CHARPY)					ASTM A 694 GR.F-52 (CHARPY)								
	END DETAIL	SW,6000#		SW,3000#		BW					BW								
	DIMENSION STD.	MSS-SP97				MSS-SP97					MSS-SP97								
	TYPE	SOCKOLET				WELDOLET					WELDOLET								

APPENDIX-II

ANSI CLASS	:	**600# (D4A) LOW TEMP SERVICE**
BASE MATERIAL	:	Carbon Steel (Material Group 1.3)
CORROSION ALLOWANCE	:	1.5 MM
SPECIAL REQUIREMENT	:	Non IBR

TEMPERATURE (Deg. C) AND PRESSURE (Kg/Sq.cm g) RATINGS

TEMP	-45	38	50	100	150	200
PRESS	97.89	97.89	96.77	92.48	89.63	87.02

SERVICE

RLNG

NOTES

1. All vents and drains shall be provided with plug valve unless mentioned otherwise in P&IDs.
2. Fittings shall be of seamless construction up to 16” and shall be of welded construction 18” and above.
3. Wall thickness for line pipe used in various sections shall be as per Table-1 of PMS.
4. Ball valve to be used in mainline shall have butt welded ends except for the valves used for hot tapping which shall be one side butt welded and other side flanged.
5. Procurement of materials shall be as per detailed relevant specifications.
6. Design pressure and temp. for pipeline and related facilities are 92 kg/cm^{2}g & (-45° to +65° C) respectively.
7. Pressure-temperature ratings indicated are for flanges only in accordance with ANSI B 16.5.
8. For valves, steel pipe and associated steel components of 2” and larger notch toughness properties shall be as specified in relevant specifications/ codes, VCS’s standard technical specifications and data sheets etc.
9. At stations, branch connections shall be as per branch connection table below.
10. All Butt welds shall be 100% radiographed.
11. 100% of socket weld shall be subjected MPI/ DPT.

12. Pressure-Temperature rating of valve body shall be as per API 6D.
13. Pipeline design code – ASME B 31.8 & OISD 226.
14. For pipeline specialty items (scrapper trap, flow tee, IJ, LR Bends etc.) and their material descriptions refer data sheet of respective items.

STATION PIPING MATERIAL SPECIFICATIONS

ITEM	SIZE	DESCRIPTION
Maintenance joints	ALL	Flanged, to be kept minimum
Pipe joints	1.5" & BELOW	Socket Weld
	2.0" & ABOVE	Butt welded
Drains	ON LINES <= 1.5"	Refer std. SD-PI-019
	ON LINES >= 2.0"	As per P&ID or 0.75". Refer std. SD-PI-018
Vents	ON LINES <= 1.5"	Refer std. SD-PI-019
	ON LINES >= 2.0"	As per P&ID or 0.75". Refer std. SD-PI-018
Temp. Connection	1.5"	Flanged, installation as per std. SD-PI-014 & 015, except skin temperature measurement.
Press. Connection	0.75"	SW nipple with Plug/ Ball Valve to spec. as per Refer std. SD-PI-011, 012 & 013

BRANCH TABLE

											T	14
										T	T	12
									T	T	T	10
								T	T	T	T	8
							T	T	T	T	T	6
						T	T	T	T	W	W	4
					T	T	T	W	W	W	W	3
				T	T	T	W	W	W	W	W	2
			T	T	S	S	S	S	S	S	S	1.5
		T	T	T	S	S	S	S	S	S	S	1
	T	T	T	T	S	S	S	S	S	S	S	0.75
T	T	T	T	S	S	S	S	S	S	S	S	0.5
0.5	0.75	1	1.5	2	3	4	6	8	10	12	14	

BRANCH PIPE

RUN PIPE

CODE DESCRIPTION

T	TEES
W	WELDOLETS
S	SOCKOLETS

PIPELINE/ PIPING DESIGN CODE		ASME B 31.8/ OISD 226									DESIGN FACTOR – 0.5							
ITEM	NOMINAL DIAMETER (INCHES)	0.50	0.75	1.00	1.50	2.00	3.00	4.00	6.00	8.00	10.0	12.0	14.0	16.0	18.0	20.0	22.0	24.0
PIPE	WALL THICKNESS (MM/SCH)	S160	S160	XS	XS	XS	STD	XS	XS	XS	XS	19.0	20.6	22.2	25.4	22.2	25.4	26.3
	MATERIAL	ASTM A333 GR.6																
	DIMENSION STD.	B 36.10																
	METHOD OF MAUFACTURE, ENDS	SEAMLESS PE				SEAMLESS BE								BE SAW				
FLANGE	MATERIAL AND GRADE	ASTM A 350 GR. LF2, CL-I																
	TYPE, FLANGE FACING	SW. RF 125 AARH				WN. THICKNESS TO MATCH PIPE THICKNESS, RF 125AARH												
	DIMENSION STD.	B 16.5																
BLIND FLANGE	MATERIAL AND GRADE	ASTM A 350 GR. LF2, CL-I																
	FLANGE FACING	RF 125 AARH																
	DIMENSION STD.	B 16.5																
BLANK	MATERIAL AND GRADE	ASTM A 350 GR. LF2, CL-I																
	FLANGE FACING	FF 125 AARH																
	DIMENSION STD.	B 16.48																
	TYPE	FIG. 8 FLANGE									SPACER & BLIND							
BOLTING	STUD BOLTS (FULLY THREADED)	A 320 GR L7, B-18.2																
	NUTS (HEAVY HEXAGONAL)	A 194 GR 4, B-18.2																
GASKET	TYPE, MATERIAL AND DMN STD.	SPIRAL, SP. WND SS316+GRAPHITE FILLED, B-16.20-ANSI B16.5																
ELBOW-90 ELBOW-45	MATERIAL	ASTM A350 GR.LF2				ASTM A 420 GR. WPL6								ASTM A 420 GR. WPL6.W				
	END DETAIL	SW,6000#		SW,3000#		BW, 1.5D												
	DIMENSION STD.	B-16.11				B-16.9												
T-EQUAL T-RED	MATERIAL	ASTM A350 GR.LF2				ASTM A 420 GR. WPL6								ASTM A 420 GR. WPL6.W				
	END DETAIL	SW,6000#		SW,3000#		BW												
	DIMENSION STD.	B-16.11				B-16.9												
CAP & PLUG (UPTO 1.5”)	MATERIAL	ASTM A350 GR.LF2				ASTM A 420 GR. WPL6												
	END DETAIL	SCRF6000		SCRF3000		BW, THICKNESS TO MATCH PIPE THICKNESS												
	DIMENSION STD.	B-16.11				B-16.9												
FITTING	MATERIAL	ASTM A350 GR.LF2				ASTM A 420 GR. WPL6								ASTM A 420 GR. WPL6.W				
	END DETAIL	SW-6000		SW-3000		BW, THICKNESS TO MATCH PIPE THICKNESS												
	DIMENSION STD.	B-16.11				B-16.9												
	TYPE	COUPLING FULL, HALF LH., RED.				RED. CON. RED. ECC.												
O’LET	MATERIAL	ASTM A350 GR.LF2																
	END DETAIL	SW,6000#		SW,3000#		BW												
	DIMENSION STD.	MSS-SP97				MSS-SP97												
	TYPE	SOCKOLET				WELDOLET												

APPENDIX-III

ANSI CLASS	:	**300# (B1A)**
BASE MATERIAL	:	Carbon Steel (Material Group 1.1)
CORROSION ALLOWANCE	:	1.5 MM
SPECIAL REQUIREMENT	:	Non IBR

TEMPERATURE (Deg. C) AND PRESSURE (Kg/Sq.cm g) RATINGS

TEMP	-29	38	50	100	150	200
PRESS	52.1	52.1	51.10	47.52	45.98	44.60

SERVICE

Natural Gas, Utilities (water, inst. air, plant air, nitrogen gas, carbon dioxide)

NOTES

1. All vents and drains shall be provided with plug valve unless mentioned otherwise in P&IDs.
2. Fittings shall be of seamless construction up to 16” and shall be of welded construction 18” and above.
3. Wall thickness for line pipe used in various sections shall be as per Table-1 of PMS.
4. Ball valve to be used in mainline shall have butt welded ends except for the valves used for hot tapping which shall be one side butt welded and other side flanged.
5. Procurement of materials shall be as per detailed relevant specifications.
6. Design pressure and temp. for pipeline and related facilities are 49 kg/cm^{2}g & (-29° to +65° C) respectively.
7. Pressure-temperature ratings indicated are for flanges only in accordance with ANSI B 16.5.
8. For valves, steel pipe and associated steel components of 2” and larger notch toughness properties shall be as specified in relevant specifications/ codes, VCS’s standard technical specifications and data sheets etc.
9. At stations, branch connections shall be as per branch connection table below.
10. All Butt welds shall be 100% radiographed.
11. 100% of socket weld shall be subjected MPI/ DPT.

12. Pressure-Temperature rating of valve body shall be as per API 6D.
13. Pipeline design code – ASME B 31.8 & OISD 226.
14. For pipeline specialty items (scrapper trap, flow tee, IJ, LR Bends etc.) and their material descriptions refer data sheet of respective items.

STATION PIPING MATERIAL SPECIFICATIONS

ITEM	SIZE	DESCRIPTION
Maintenance joints	ALL	Flanged, to be kept minimum
Pipe joints	1.5" & BELOW	Socket Weld
	2.0" & ABOVE	Butt welded
Drains	ON LINES <= 1.5"	Refer std. SD-PI-019
	ON LINES >= 2.0"	As per P&ID or 0.75". Refer std. SD-PI-018
Vents	ON LINES <= 1.5"	Refer std. SD-PI-019
	ON LINES >= 2.0"	As per P&ID or 0.75". Refer std. SD-PI-018
Temp. Connection	1.5"	Flanged, installation as per std. SD-PI-014 & 015, except skin temperature measurement.
Press. Connection	0.75"	SW nipple with Plug/ Ball Valve to spec. as per Refer std. SD-PI-011, 012 & 013

BRANCH TABLE

											T	14
										T	T	12
									T	T	T	10
								T	T	T	T	8
							T	T	T	T	T	6
						T	T	T	T	W	W	4
					T	T	T	W	W	W	W	3
				T	T	T	W	W	W	W	W	2
			T	T	S	S	S	S	S	S	S	1.5
		T	T	S	S	S	S	S	S	S	S	1
	T	T	T	S	S	S	S	S	S	S	S	0.75
T	T	T	T	S	S	S	S	S	S	S	S	0.5
0.5	0.75	1	1.5	2	3	4	6	8	10	12	14	

BRANCH PIPE

RUN PIPE

CODE DESCRIPTION

T	TEES
W	WELDOLETS
S	SOCKOLETS

PIPELINE/ PIPING DESIGN CODE		ASME B 31.8/ OISD 226									DESIGN FACTOR – 0.5					
ITEM	NOMINAL DIAMETER (INCHES)	0.50	0.75	1.00	1.50	2.00	3.00	4.00	6.00	8.00	10.0	12.0	14.0	16.0	18.0	20.0
PIPE	WALL THICKNESS (MM/SCH)	S160	S160	XS	XS	XS	STD	S40	S40	7.9	STD	S40	S40	S40	S40	15.9
	MATERIAL	ASTM A 106 GR.B				ASTM A 106 GR.B (CHARPY)				API 5L GR.B PSL2						
	DIMENSION STD.	B 36.10								API 5L						
	METHOD OF MAUFACTURE, ENDS	SEAMLESS PE				SEAMLESS BE								BE SAW		
FLANGE	MATERIAL AND GRADE	ASTM A 105				ASTM A 105 (CHARPY)										
	TYPE, FLANGE FACING	SW. RF 125 AARH				WN. THICKNESS TO MATCH PIPE THICKNESS, RF 125AARH										
	DIMENSION STD.	B 16.5														
BLIND FLANGE	MATERIAL AND GRADE	ASTM A 105				ASTM A 105 (CHARPY)										
	FLANGE FACING	RF 125 AARH														
	DIMENSION STD.	B 16.5														
BLANK	MATERIAL AND GRADE	ASTM A 105				ASTM A 105 (CHARPY)										
	FLANGE FACING	FF 125 AARH														
	DIMENSION STD.	B 16.48														
	TYPE	FIG. 8 FLANGE									SPACER & BLIND					
BOLTING	STUD BOLTS (FULLY THREADED)	A 193 GR B7, B-18.2														
	NUTS (HEAVY HEXAGONAL)	A 194 GR 2H, B-18.2														
GASKET	TYPE, MATERIAL AND DMN STD.	SPIRAL 300#, SP. WND SS316+GRAPHITE FILLED, B-16.20-ANSI B16.5														
ELBOW-90 ELBOW-45	MATERIAL	ASTM A 105				ASTM A 234 GR.WPB (CHARPY)										
	END DETAIL	SW,6000#		SW,3000#		BW, 1.5D										
	DIMENSION STD.	B-16.11				B-16.9										
T-EQUAL T-RED	MATERIAL	ASTM A 105				ASTM A 234 GR.WPB (CHARPY)										
	END DETAIL	SW,6000#		SW,3000#		BW, THICKNESS TO MATCH PIPE THICKNESS										
	DIMENSION STD.	B-16.11				B-16.9										
CAP	MATERIAL	ASTM A 105				ASTM A 234 GR.WPB (CHARPY)										
	END DETAIL	SCRF6000		SCRF3000		BW, THICKNESS TO MATCH PIPE THICKNESS										
	DIMENSION STD.	B-16.11				B-16.9										
FITTING	MATERIAL	ASTM A 105				ASTM A 234 GR.WPB (CHARPY)										
	END DETAIL	SW,6000#		SW,3000#		BW, THICKNESS TO MATCH PIPE THICKNESS										
	DIMENSION STD.	B-16.11				B-16.9										
	TYPE	COUPLING FULL, HALF LH., RED.				RED. CON. RED. ECC.										
O'LET	MATERIAL	ASTM A 105				ASTM A 105 (CHARPY)										
	END DETAIL	SW,6000#		SW,3000#		BW										
	DIMENSION STD.	MSS-SP97				MSS-SP97										
	TYPE	SOCKOLET				WELDOLET										

APPENDIX-IV

ANSI CLASS	**:**	**300# (B4A) LOW TEMP SERVICE**
BASE MATERIAL	:	Carbon Steel (Material Group 1.3)
CORROSION ALLOWANCE	:	1.5 MM
SPECIAL REQUIREMENT	:	Non IBR

TEMPERATURE (Deg. C) AND PRESSURE (Kg/Sq.cm g) RATINGS

TEMP	-45	38	50	80	100	120	120	150
PRESS	48.95	48.95	48.44	46.72	46.19	45.54	45.54	44.76

SERVICE

RLNG

NOTES

1. All vents and drains shall be provided with plug valve unless mentioned otherwise in P&IDs.
2. Fittings shall be of seamless construction up to 16” and shall be of welded construction 18” and above.
3. Wall thickness for line pipe used in various sections shall be as per Table-1 of PMS.
4. Ball valve to be used in mainline shall have butt welded ends except for the valves used for hot tapping which shall be one side butt welded and other side flanged.
5. Procurement of materials shall be as per detailed relevant specifications.
6. Design pressure and temp. for pipeline and related facilities are 49 kg/cm^{2}g & (-45° to +65° C) respectively.
7. Pressure-temperature ratings indicated are for flanges only in accordance with ANSI B 16.5.
8. For valves, steel pipe and associated steel components of 2” and larger notch toughness properties shall be as specified in relevant specifications/ codes, VCS’s standard technical specifications and data sheets etc.
9. At stations, branch connections shall be as per branch connection table below.
10. All Butt welds shall be 100% radiographed.
11. 100% of socket weld shall be subjected MPI/ DPT.

12. Pressure-Temperature rating of valve body shall be as per API 6D.
13. Pipeline design code – ASME B 31.8 & OISD 226.
14. For pipeline specialty items (scrapper trap, flow tee, IJ, LR Bends etc.) and their material descriptions refer data sheet of respective items.

STATION PIPING MATERIAL SPECIFICATIONS

ITEM	SIZE	DESCRIPTION
Maintenance joints	ALL	Flanged, to be kept minimum
Pipe joints	1.5" & BELOW	Socket Weld
	2.0" & ABOVE	Butt welded
Drains	ON LINES <= 1.5"	Refer std. SD-PI-019
	ON LINES >= 2.0"	As per P&ID or 0.75". Refer std. SD-PI-018
Vents	ON LINES <= 1.5"	Refer std. SD-PI-019
	ON LINES >= 2.0"	As per P&ID or 0.75". Refer std. SD-PI-018
Temp. Connection	1.5"	Flanged, installation as per std. SD-PI-014 & 015, except skin temperature measurement.
Press. Connection	0.75"	SW nipple with Plug/ Ball Valve to spec. as per Refer std. SD-PI-011, 012 & 013

BRANCH TABLE

											T	14
										T	T	12
									T	T	T	10
								T	T	T	T	8
							T	T	T	T	T	6
						T	T	T	T	W	W	4
					T	T	T	W	W	W	W	3
				T	T	T	W	W	W	W	W	2
			T	T	S	S	S	S	S	S	S	1.5
		T	T	T	S	S	S	S	S	S	S	1
	T	T	T	T	S	S	S	S	S	S	S	0.75
T	T	T	T	S	S	S	S	S	S	S	S	0.5
0.5	0.75	1	1.5	2	3	4	6	8	10	12	14	

BRANCH PIPE

RUN PIPE

CODE DESCRIPTION

T	TEES
W	WELDOLETS
S	SOCKOLETS

PIPELINE/ PIPING DESIGN CODE		ASME B 31.8/ OISD 226									DESIGN FACTOR – 0.5							
ITEM	NOMINAL DIAMETER (INCHES)	0.50	0.75	1.00	1.50	2.00	3.00	4.00	6.00	8.00	10.0	12.0	14.0	16.0	18.0	20.0	22.0	24.0
PIPE	WALL THICKNESS (MM/SCH)	S160	S160	XS	XS	XS	STD	STD	STD	STD	STD	S40	S40	S30	S30	S30	S30	S30
	MATERIAL	ASTM A333 GR.6																
	DIMENSION STD.	B 36.10																
	METHOD OF MAUFACTURE, ENDS	SEAMLESS PE				SEAMLESS BE								BE SAW				
FLANGE	MATERIAL AND GRADE	ASTM A 350 GR. LF2, CL-I																
	TYPE, FLANGE FACING	SW. RF 125 AARH				WN. THICKNESS TO MATCH PIPE THICKNESS, RF 125AARH												
	DIMENSION STD.	B 16.5																
BLIND FLANGE	MATERIAL AND GRADE	ASTM A 350 GR. LF2, CL-I																
	FLANGE FACING	RF 125 AARH																
	DIMENSION STD.	B 16.5																
BLANK	MATERIAL AND GRADE	ASTM A 350 GR. LF2, CL-I																
	FLANGE FACING	FF 125 AARH																
	DIMENSION STD.	B 16.48																
	TYPE	FIG. 8 FLANGE									SPACER & BLIND							
BOLTING	STUD BOLTS (FULLY THREADED)	A 320 GR L7, B-18.2																
	NUTS (HEAVY HEXAGONAL)	A 194 GR 4, B-18.2																
GASKET	TYPE, MATERIAL AND DMN STD.	SPIRAL, SP. WND SS316+GRAPHITE FILLED, B-16.20-ANSI B16.5																
ELBOW-90 ELBOW-45	MATERIAL	ASTM A350 GR.LF2				ASTM A 420 GR. WPL6								ASTM A 420 GR. WPL6.W				
	END DETAIL	SW,6000#		SW,3000#		BW, 1.5D												
	DIMENSION STD.	B-16.11				B-16.9												
T-EQUAL T-RED	MATERIAL	ASTM A350 GR.LF2				ASTM A 420 GR. WPL6								ASTM A 420 GR. WPL6.W				
	END DETAIL	SW,6000#		SW,3000#		BW												
	DIMENSION STD.	B-16.11				B-16.9												
CAP & PLUG (UPTO 1.5”)	MATERIAL	ASTM A350 GR.LF2				ASTM A 420 GR. WPL6								ASTM A 420 GR. WPL6.W				
	END DETAIL	SCRF6000		SCRF3000		BW, THICKNESS TO MATCH PIPE THICKNESS												
	DIMENSION STD.	B-16.11				B-16.9												
FITTING	MATERIAL	ASTM A350 GR.LF2				ASTM A 420 GR. WPL6								ASTM A 420 GR. WPL6.W				
	END DETAIL	SW-6000		SW-3000		BW, THICKNESS TO MATCH PIPE THICKNESS												
	DIMENSION STD.	B-16.11				B-16.9												
	TYPE	COUPLING FULL, HALF LH., RED.				RED. CON. RED. ECC.												
O’LET	MATERIAL	ASTM A350 GR.LF2																
	END DETAIL	SW,6000#		SW,3000#		BW												
	DIMENSION STD.	MSS-SP97				MSS-SP97												
	TYPE	SOCKOLET				WELDOLET												

APPENDIX-V

ANSI CLASS	:	**150# (A1A)**
BASE MATERIAL	:	Carbon Steel (Material Group 1.1)
CORROSION ALLOWANCE	:	1.5 MM
SPECIAL REQUIREMENT	:	Non IBR

TEMPERATURE (Deg. C) AND PRESSURE (Kg/Sq.cm g) RATINGS

TEMP	-29	38	50	100	150	200
PRESS	19.98	19.98	19.57	18.05	16.11	14.07

SERVICE

Natural Gas, Utilities (water, inst. air, plant air, nitrogen gas, carbon dioxide)

NOTES

1. All vents and drains shall be provided with plug valve unless mentioned otherwise in P&IDs.
2. Fittings shall be of seamless construction up to 16” and shall be of welded construction 18” and above.
3. Wall thickness for line pipe used in various sections shall be as per Table-1 of PMS.
4. Ball valve to be used in mainline shall have butt welded ends except for the valves used for hot tapping which shall be one side butt welded and other side flanged.
5. Procurement of materials shall be as per detailed relevant specifications.
6. Design pressure and temp. for pipeline and related facilities are 19 kg/cm^{2}g & (-29° to +65° C) respectively.
7. Pressure-temperature ratings indicated are for flanges only in accordance with ANSI B 16.5.
8. For valves, steel pipe and associated steel components of 2” and larger notch toughness properties shall be as specified in relevant specifications/ codes, VCS’s standard technical specifications and data sheets etc.
9. At stations, branch connections shall be as per branch connection table below.
10. All Butt welds shall be 100% radiographed.
11. 100% of socket weld shall be subjected MPI/ DPT.

12. Pressure-Temperature rating of valve body shall be as per API 6D.
13. Pipeline design code – ASME B 31.8 & OISD 226.
14. For pipeline specialty items (scrapper trap, flow tee, IJ, LR Bends etc.) and their material descriptions refer data sheet of respective items.

STATION PIPING MATERIAL SPECIFICATIONS

ITEM	SIZE	DESCRIPTION
Maintenance joints	ALL	Flanged, to be kept minimum
Pipe joints	1.5" & BELOW	Socket Weld
	2.0" & ABOVE	Butt welded
Drains	ON LINES <= 1.5"	Refer std. SD-PI-019
	ON LINES >= 2.0"	As per P&ID or 0.75". Refer std. SD-PI-018
Vents	ON LINES <= 1.5"	Refer std. SD-PI-019
	ON LINES >= 2.0"	As per P&ID or 0.75". Refer std. SD-PI-018
Temp. Connection	1.5"	Flanged, installation as per std. SD-PI-014 & 015, except skin temperature measurement.
Press. Connection	0.75"	SW nipple with Plug/ Ball Valve to spec. as per Refer std. SD-PI-011, 012 & 013

BRANCH TABLE

											T	14	BRANCH PIPE
										T	T	12	
									T	T	T	10	
								T	T	T	T	8	
							T	T	T	T	T	6	
						T	T	T	T	W	W	4	
					T	T	T	W	W	W	W	3	
				T	T	T	W	W	W	W	W	2	
			T	T	S	S	S	S	S	S	S	1.5	
		T	T	S	S	S	S	S	S	S	S	1	
	T	T	T	S	S	S	S	S	S	S	S	0.75	
T	T	T	T	S	S	S	S	S	S	S	S	0.5	
0.5	0.75	1	1.5	2	3	4	6	8	10	12	14		

RUN PIPE

CODE DESCRIPTION

T	TEES
W	WELDOLETS
S	SOCKOLETS

PIPELINE/ PIPING DESIGN CODE		ASME B 31.8/ OISD 226									DESIGN FACTOR – 0.5							
ITEM	NOMINAL DIAMETER (INCHES)	0.50	0.75	1.00	1.50	2.00	3.00	4.00	6.00	8.00	10.0	12.0	14.0	16.0	18.0	20.0	22.0	24.0
PIPE	WALL THICKNESS (MM/SCH)	S160	S160	XS	XS	XS	STD	STD	STD	S20	S20	S20	S10	S10	S10	7.1	7.9	8.7
	MATERIAL	ASTM A 106 GR.B				ASTM A 106 GR.B (CHARPY)				API 5L GR.B PSL2								
	DIMENSION STD.	B 36.10								API 5L								
	METHOD OF MAUFACTURE, ENDS	SEAMLESS PE				SEAMLESS BE								BE SAW				
FLANGE	MATERIAL AND GRADE	ASTM A 105				ASTM A 105 (CHARPY)												
	TYPE, FLANGE FACING	SW. RF 125 AARH				WN. THICKNESS TO MATCH PIPE THICKNESS, RF 125AARH												
	DIMENSION STD.	B 16.5																
BLIND FLANGE	MATERIAL AND GRADE	ASTM A 105				ASTM A 105 (CHARPY)												
	FLANGE FACING	RF 125 AARH																
	DIMENSION STD.	B 16.5																
BLANK	MATERIAL AND GRADE	ASTM A 105				ASTM A 105 (CHARPY)												
	FLANGE FACING	FF 125 AARH																
	DIMENSION STD.	B 16.48																
	TYPE	FIG. 8 FLANGE									SPACER & BLIND							
BOLTING	STUD BOLTS (FULLY THREADED)	A 193 GR B7, B-18.2																
	NUTS (HEAVY HEXAGONAL)	A 194 GR 2H, B-18.2																
GASKET	TYPE, MATERIAL AND DMN STD.	SP. WND SS316+GRAPHITE FILLED, B-16.20-ANSI B16.5																
ELBOW-90 ELBOW-45	MATERIAL	ASTM A 105				ASTM A 234 GR.WPB (CHARPY)								ASTM A 234 GR.WPB-W (CHARPY)				
	END DETAIL	SW,6000#		SW,3000#		BW, 1.5D												
	DIMENSION STD.	B-16.11				B-16.9												
T-EQUAL T-RED	MATERIAL	ASTM A 105				ASTM A 234 GR.WPB (CHARPY)								ASTM A 234 GR.WPB-W (CHARPY)				
	END DETAIL	SW,6000#		SW,3000#		BW, THICKNESS TO MATCH PIPE THICKNESS												
	DIMENSION STD.	B-16.11				B-16.9												
CAP	MATERIAL	ASTM A 105				ASTM A 234 GR.WPB (CHARPY)												
	END DETAIL	SCRF6000		SCRF3000		BW, THICKNESS TO MATCH PIPE THICKNESS												
	DIMENSION STD.	B-16.11				B-16.9												
FITTING	MATERIAL	ASTM A 105				ASTM A 234 GR.WPB (CHARPY)								ASTM A 234 GR.WPB-W (CHARPY)				
	END DETAIL	SW,6000#		SW,3000#		BW, THICKNESS TO MATCH PIPE THICKNESS												
	DIMENSION STD.	B-16.11				B-16.9												
	TYPE	COUPLING FULL, HALF LH., RED.				RED. CON. RED. ECC.												
O'LET	MATERIAL	ASTM A 105				ASTM A 105 (CHARPY)												
	END DETAIL	SW,6000#		SW,3000#		BW												
	DIMENSION STD.	MSS-SP97				MSS-SP97												
	TYPE	SOCKOLET				WELDOLET												

APPENDIX-VI

ANSI CLASS	**:**	**150# (A4A)**
BASE MATERIAL	:	Carbon Steel (Material Group 1.1)
CORROSION ALLOWANCE	:	1.5 MM
SPECIAL REQUIREMENT	:	Non IBR

TEMPERATURE (Deg. C) AND PRESSURE (Kg/Sq.cm g) RATINGS

TEMP	-45	38	50	100	150
PRESS	18.76	18.76	18.55	17.74	16.11

SERVICE

RLNG

NOTES

1. All vents and drains shall be provided with plug valve unless mentioned otherwise in P&IDs.
2. Fittings shall be of seamless construction up to 16" and shall be of welded construction 18" and above.
3. Wall thickness for line pipe used in various sections shall be as per Table-1 of PMS.
4. Ball valve to be used in mainline shall have butt welded ends except for the valves used for hot tapping which shall be one side butt welded and other side flanged.
5. Procurement of materials shall be as per detailed relevant specifications.
6. Design pressure and temp. for pipeline and related facilities are 19 kg/cm^{2}g & (-45° to +65° C) respectively.
7. Pressure-temperature ratings indicated are for flanges only in accordance with ANSI B 16.5.
8. For valves, steel pipe and associated steel components of 2" and larger notch toughness properties shall be as specified in relevant specifications/ codes, VCS's standard technical specifications and data sheets etc.
9. At stations, branch connections shall be as per branch connection table below.
10. All Butt welds shall be 100% radiographed.
11. 100% of socket weld shall be subjected MPI/ DPT.

12. Pressure-Temperature rating of valve body shall be as per API 6D.
13. Pipeline design code – ASME B 31.8 & OISD 226.
14. For pipeline specialty items (scrapper trap, flow tee, IJ, LR Bends etc.) and their material descriptions refer data sheet of respective items.

STATION PIPING MATERIAL SPECIFICATIONS

ITEM	SIZE	DESCRIPTION
Maintenance joints	ALL	Flanged, to be kept minimum
Pipe joints	1.5" & BELOW	Socket Weld
	2.0" & ABOVE	Butt welded
Drains	ON LINES <= 1.5"	Refer std. SD-PI-019
	ON LINES >= 2.0"	As per P&ID or 0.75". Refer std. SD-PI-018
Vents	ON LINES <= 1.5"	Refer std. SD-PI-019
	ON LINES >= 2.0"	As per P&ID or 0.75". Refer std. SD-PI-018
Temp. Connection	1.5"	Flanged, installation as per std. SD-PI-014 & 015, except skin temperature measurement.
Press. Connection	0.75"	SW nipple with Plug/ Ball Valve to spec. as per Refer std. SD-PI-011, 012 & 013

BRANCH TABLE

											T	14
										T	T	12
									T	T	T	10
								T	T	T	T	8
							T	T	T	T	T	6
						T	T	T	T	W	W	4
					T	T	T	W	W	W	W	3
				T	T	T	W	W	W	W	W	2
			T	T	S	S	S	S	S	S	S	1.5
		T	T	S	S	S	S	S	S	S	S	1
	T	T	T	S	S	S	S	S	S	S	S	0.75
T	T	T	T	S	S	S	S	S	S	S	S	0.5
0.5	0.75	1	1.5	2	3	4	6	8	10	12	14	

BRANCH PIPE

RUN PIPE

CODE DESCRIPTION

T	TEES
W	WELDOLETS
S	SOCKOLETS

PIPELINE/ PIPING DESIGN CODE		ASME B 31.8/ OISD 226										DESIGN FACTOR – 0.5		
ITEM	NOMINAL DIAMETER (INCHES)	0.50	0.75	1.00	1.50	2.00	3.00	4.00	6.00	8.00	10.0	12.0	14.0	
PIPE	WALL THICKNESS (MM/SCH)	S160	S160	XS	XS	XS	STD	STD	STD	STD	STD	STD	STD	
	MATERIAL	ASTM A 333 GR.6												
	DIMENSION STD.	B 36.10												
	METHOD OF MAUFACTURE, ENDS	SEAMLESS PE				SEAMLESS BE								
FLANGE	MATERIAL AND GRADE	ASTM A 350 GR. LF2, CL-I												
	TYPE, FLANGE FACING	SW. RF 125 AARH				WN. THICKNESS TO MATCH PIPE THICKNESS, RF 125AARH								
	DIMENSION STD.	B 16.5												
BLIND FLANGE	MATERIAL AND GRADE	ASTM A 350 GR. LF2, CL-I												
	FLANGE FACING	RF 125 AARH												
	DIMENSION STD.	B 16.5												
BLANK	MATERIAL AND GRADE	ASTM A 350 GR. LF2, CL-I												
	FLANGE FACING	FF 125 AARH												
	DIMENSION STD.	B 16.48												
	TYPE	FIG. 8 FLANGE									SPACER & BLIND			
BOLTING	STUD BOLTS (FULLY THREADED)	A 320 GR L7, B-18.2												
	NUTS (HEAVY HEXAGONAL)	A 194 GR 4, B-18.2												
GASKET	TYPE, MATERIAL AND DMN STD.	SPIRAL, SP. WND SS316+GRAPHITE FILLED, B-16.20-ANSI B16.5												
ELBOW-90 ELBOW-45	MATERIAL	ASTM A 350 GR.LF2				ASTM A 420 GR. WPL6								
	END DETAIL	SW,6000#		SW,3000#		BW, 1.5D								
	DIMENSION STD.	B-16.11				B-16.9								
T-EQUAL T-RED	MATERIAL	ASTM A 350 GR.LF2				ASTM A 420 GR. WPL6								
	END DETAIL	SW,6000#		SW,3000#		BW								
	DIMENSION STD.	B-16.11				B-16.9								
CAP	MATERIAL	ASTM A 350 GR.LF2				ASTM A 420 GR. WPL6								
	END DETAIL	SCRF6000		SCRF3000		BW, THICKNESS TO MATCH PIPE THICKNESS								
	DIMENSION STD.	B-16.11				B-16.9								
FITTING	MATERIAL	ASTM A 350 GR.LF2				ASTM A 420 GR. WPL6								
	END DETAIL	SW,6000#		SW,3000#		BW, THICKNESS TO MATCH PIPE THICKNESS								
	DIMENSION STD.	B-16.11				B-16.9								
	TYPE	COUPLING FULL, HALF LH., RED.				RED. CON. RED. ECC.								
O'LET	MATERIAL	ASTM A 350 GR.LF2				ASTM A 350 GR.LF2								
	END DETAIL	SW,6000#		SW,3000#		BW								
	DIMENSION STD.	MSS-SP97				MSS-SP97								
	TYPE	SOCKOLET				WELDOLET								

VCS QUALITY SERVICES PVT. LTD.

STANDARD SPECIFICATION
FOR
PACKING, TRANSPORTATION AND HANDLING OF VALVES

VCS – SS – PP - 2050

00	03.05.2022	SR	MC	HK	HK
Rev. No	**Date**	**Prepared By**	**Checked By**	**Approved By**	**Authorized By**

UNCONTROLLED COPY	:	**If printed**
CONTROLLED COPY	:	**If in soft and signed**

REVISION RECORD						
Rev.	**Revision Date**	**Prepared by**	**Checked by**	**Approved by**	**Authorized by**	**Revision Description**
00	03.05.2022					Issued as Standard Specification
		SR	MC	HK	HK	

ABBREVIATIONS:

ASME	American Society of Mechanical Engineers
ASTM	American Society of Testing and Materials
API	American Petroleum Institute
BS	British Standards
ISO	International Organization for Standardization
MSS-SP	Manufacturers Standardization Society - Standard Practice
NACE	National Association of Corrosion Engineers
OISD	Oil Industry Safety Directorate
SSPC	Steel Structures Painting Council

TABLE OF CONTENTS

1.0 SCOPE 4

2.0 PACKING 4

3.0 HANDLING…… 4

4.0 TRANSPORTATION.....5

1.0 SCOPE

This specification covers the minimum requirements for Packing, Handling & transportation of valves and actuators. Though this specification covers the minimum requirement for packing, handling and transportation of valves, it is to be noted that any defect/ damage arising out of improper packing, handling & transportation shall be the responsibility of vendor. The delay due to rectification of such faults shall be to vendor's account. The date of delivery of material at site shall be considered as the day on which last such rectified material is delivered/ rectified at designated store.

2.0 PACKING

2.1 All valves shall be completely drained of test fluid and thoroughly dried after hydrotesting. The machined surfaces shall be coated with a light film of high viscosity rust inhibiting oil which will not become fluid and run off at temperatures below 80°C.

2.2 Flanged valves NPS 6" and smaller in Class 150 and Class 300 shall be fitted with UV resistant plastic covers. For other sizes, valve end flanges shall be fitted with plywood covers. The cover diameter shall be the same as the outside diameter of the flange and shall be at least 10 mm thick for valves up to NPS 24" and 12 mm thick for valves NPS 26" and larger. The cover shall be attached by machine bolts with a nut and washer fitted on the inside of the flange. There shall be minimum four (4) bolts on valves up to NPS 24" nominal size and eight (8) bolts on valves NPS 26 inch and larger. The bolts diameter shall not be less than ¼ the size of the flange bolt hole.

2.3 In addition to the above, all flange facings (ring joint, raised and flat) shall be covered with NBR (based) rubber Self-Adhesive protection (see fig below) that meets the following:

- Oil, ozone and weather resistant
- Minimum thickness of 1.5 mm
- Withstand temperatures up to 75°C
- Non deforming, loosening or detaching
- Proof against sand blasting
- No glue residue
- Chloride free

2.4 Buttweld end valves shall be blanked on each end by high impact plastic bevel protectors, so that bevels are protected from possible mechanical damage during transportation.

2.5 The ends of threaded and socket weld end valves shall be protected with tight fitting plastic caps.

2.6 Packing shall be strong and sturdy such that it can withstand loading/unloading, pushing and crane lifting etc. All packaging shall be done in such a manner as to reduce volume and weight as much as possible without jeopardizing the safety of the material. All packing materials shall be new.

2.7 Stacking of multiple valves in single box is permitted upto 4" NB. However, in such case suitable partitions are to be made inside packing box.

2.8 Where height limitations restrict transportation of valve with actuator in assembled condition, it is permissible to dismantle the actuator after successful testing at shop. However, the same need to be proposed by valve manufacturer during inspection of said valves and take the approval for Client/ PMC.

2.9 When valve, extended stem and actuators are transported in dismantled condition, the same shall be reassembled after fitment of valve at site. Valve vendor to deploy their representative within 3 days once the intimation is sent from site. Any delay beyond 3 days shall be to supplier's account.

2.10 Valve manufacturers to note that the safe transportation of assembled valve with actuator is in their scope of work. It is therefore required that the valve manufacturer should order actuator meeting the packing guidelines given in this specification. No claim shall be entertained on account of actuator manufacturer's non compliance of requirements specified in this specification, and the valve with actuator shall leave manufacturer's workshop after meeting the terms given in this specification.

2.11 Valves shall not be packed in poly wrap irrespective of the increase in shipping/ transport volume. Box of wood/ ply board etc. shall only be used to pack the valves with/ without actuator irrespective of the size/ rating of the valve.

2.12 The packing shall have suitable lifting arrangement to enable the lifting of valve with the packing. Suitable provisions/ supports shall be provided from support foot/ lifting lugs to enable to lift the valve with packing.

2.13 Where it is required to transport valve and actuator separately, above clauses shall be individually applicable for valve and actuator.

2.14 Assembled Valves shall be properly secured inside packing in order to avoid any contact with packing material during transport.

2.15 For extended stem valves, it is permissible to dismantle stem extension and actuator and as such the valve may be transported in three parts, each part complying individually the requirements of this specification.

2.16 Actuators shall be packed in wooden box with proper cushioning of damage prone parts like sockets, tubing, panel boxes etc.

2.17 Actuator cylinders shall be mounted on base with the help of metallic U-clamps/ welding on reinforcement plate. Metallic U-clamps to be used with double bolts on either side of U clamp.

2.18 Actuator components layout shall be such that to minimize packing volume. Back-up tank shall be put in horizontal position only, wherever feasible.

2.19 The manufacturer shall submit the photos of packing meeting the above requirements before shipment of valves.

3.0 HANDLING

3.1 Manufacturer to ensure that during lifting hooks for assembly are attached to body/ end piece casting/ forging only and not on the pup piece. Any pup piece having hook attachment mark may be rejected.

3.2 Assmebled valves, at all times, shall be lifted through lifting lugs only and not from the pup pieces.

3.3 Support foot shall be provided on body only in bolted design. In no case, the support foot shall be fastened in body bolting.

3.4 Lifting Lugs shall be provided on body/ tail piece in bolted design. In no case, the lifting lugs shall be fastened in body bolting.

3.5 Valve vendor to work in close coordination with actuator vendor to ensure that the sling put in lifting lug of valve do not interfere with the actuator/ tubing during lifting at site. Any breakage during site lifting due to fouling of tubing/ actuator components during site lifting shall be in supplier' account.

3.6 Extended Stem valves shall have placement of lifting lugs to ensure the lifting of valve in stem vertical condition only. Under no condition the valve is to be lifted in Stem horizontal/ inclined position.

4.0 TRANSPORTATION

4.1 If the valve and actuator in assembled condition can be accommodated on low bed trailer, low bed trailer shall only be used for inland transportation. Dismantling of valve and actuator shall not be permitted under such case.

4.2 Valve shall be secured on trailer/ truck bed with ropes suitably attached with valve boxes. Type of rope selection shall depend upon weight of valve.

4.3 Tack welds on trailer/ truck bed shall not be used as a fastening method.

4.4 Bolting may be used to securely fasten the valve base on trailer if the provision is available. No. and diameter of bolts shall be suitably chosen as per weight of valve to ensure that bolts do not shear off during transportation.

4.5 For large size valves, Loading shall be done preferably by hanging the valve in position and moving the vehicle to valve sitting position.

4.6 Since unloading of valves is under valve manufacturer's scope, it is to be ensured that valve manufacturer's representative shall be available at designated store to facilitate the same. Valve manufacturer has to keep the track of vehicle movement accordingly. If due to project exigency/ time constraint the unloading has to be done during manufacturer's representative's absence, any damage during such unloading shall be attributable to manufacturer only.

FILE NAME : C221052-00-PC-LGD-1000_SHT. 1 OF 5

VALVES SYMBOLS

- GATE VALVE
- GLOBE VALVE (WELDED)
- GLOBE VALVE (FLANGED)
- CHECK VALVE
- PLUG VALVE (WELDED)
- PLUG VALVE (FLANGED)
- BALL VALVE (WELDED)
- BALL VALVE (FLANGED)
- THREE-WAY VALVE
- TRACED & INSULATED VALVE
- NEEDLE VALVE
- VALVE WITH PLUG

AREA CODE

DIPL		SGPL	
00	: LEGENDS	00	: LEGENDS
34	: DISPATCH TERMINAL	10	: DISPATCH TERMINAL
46	: RECEIPT TERMINAL	20	: RECEIPT TERMINAL
41	: INTERMEDIATE PIGGING STATION	15	: INTERMEDIATE PIGGING STATION
35 TO 40	: SV STATION	11 TO 14	: SV STATION
42 TO 45	: SV STATION	16 TO 19	: SV STATION

LINE (FLOW) SYMBOLS

- MAIN PROCESS LINE
- UTILITY & SECONDARY PROCESS LINE
- EXISTING MAIN LINE
- EXISTING SECONDARY LINE
- UNDERGROUND LINE
- HC — INSULATION HEAT CONSERVATION
- PP — INSULATION PERSONEL PROTECTION
- SLOPE

BOUNDARIES

- BUILDING WALL
- FENCE LINE
- BATTERY LIMIT
- GRADE LEVEL
- AG / UG — ABOVE GROUND / UNDER GROUND
- COMPANY OR CLIENT | VENDOR OR CONTRACTOR — BREAK OF RESPONSIBILITY
- TP XX — TIE-IN POINT; XX - SEQUENCE #
- PACKAGED UNIT BOUNDARY
- XXX / XXX — SPEC. BREAK
- 8-P-15HC-1002 / 8-P-15HC-1001 — LINE NUMBER CHANGE
- 8-P-15HLT-XXX / 8-P-15HLT-XXX — PIPE SPECIFICATION CHANGE
- X = EQUIPMENT NO. / Y = DRAWING NO — CONTINUATION SYMBOL

MISCELLANEOUS

- DEMISTER SECTION
- VANE SEPARATOR
- VORTEX BREAKER
- SC XXX — SAMPLE CONNECTION; XXX - SEQUENCE
- SP XXX — SPECIALTY ITEM; XXX - SEQUENCE
- VENT WITH FLAPPER
- QOEC (PIPELINE BLOWDOWN VENT)
- ANCHOR
- CP — CORROSION PROBE
- CC — CORROSION COUPEN
- ER — ELECTRICAL RESISTANCE
- INJECTION QUILL

FLOW SYMBOLS

- FE — FLOW TUBE (OR) FLOW NOZZLE
- FE — VENTURI TYPE FLOW METER
- C.V. DIFFUSER
- ROTOMETER
- CORIOLIS MASS FLOW METER
- IN-LINE INSTRUMENT
- POSITIVE DISPLACEMENT METER
- USM — ULTRASONIC FLOW METER
- FE — ORIFICE PLATE WITH FLANGE OR CORNER TAPS; FE-ORIFICE PLATE FOR MEASUREMENT
- RO — RO - RESTRICTION ORIFICE
- SENIOR ORIFICE METER
- FE — ORIFICE METER
- FT — TURBINE FLOW METERING
- PITOT TUBE OR ANNUBAR FLOW METER

INSULATION TYPES

IH	- INSULATION (HOT)	IT	- STEAM (TRACING)
IC	- INSULATION (COLD)	IE	- ELECTRIC (TRACING)
IS	- INSULATION (SAFETY)		
IA	- INSULATION ACOUSTIC		

EQUIPMENT DESIGNATION

C221052 - XX - EQUIPMENT PREFIX - XX

- 2 DIGITS NO.
- EQUIPMENT CODE
- AREA CODE
- PROJECT CODE

LINE IDENTIFICATION

C221052 - 00" - FLUID - 00 - 00 - X70 / A1A / B1A / D1A

- MATERIAL SPEC
- 2 DIGIT LINE NUMBER
- UNIT NO.
- (P- NATURAL GAS)
- LINE SIZE (NOMINAL)
- PROJECT CODE

INSTRUMENT IDENTIFICATION

C221052 - XX - XXX - XX

- 2 DIGITS NO.
- NAME OF INSTRUMENT
- AREA CODE
- PROJECT CODE

LINE LEGEND

PROCESS LINES

P - PROCESS FLUIDS (NATURAL GAS)

UTILITY GENERAL

- AI - INSTRUMENT AIR
- AU - UTILITY AIR
- IG - INSTRUMENT GAS
- AS - AIR STARTING
- FG - FUEL GAS

DRAIN LINES

- D - DRAIN
- DW - DRAIN WATER
- OD - OPEN DRAIN

UTILITY WATER

- WC - COOLING WATER
- WF - FIRE WATER
- WP - POTABLE WATER
- SW - SEWER
- WU - UTILITY WATER

VENT & BLOWDOWN

- BD - BLOW DOWN
- V - VENT
- FL - FLARE
- SV - SAFE VALVE DISCHARGE

CHEMICAL

- C - CHEMICAL
- SH - SODIUM HYPOCHLORITE
- GL - GLYCOL.

UTILITY GAS & FUEL

- DF - DIESEL FUEL
- N - NITROGEN

REFERENCE DRAWINGS

DRAWING TITLE	DRAWING NUMBER

REV.	DATE	DESCRIPTION	PREP.	CHKD.	APPD.
C2	23.05.22	ISSUED FOR CLIENT APPROVAL	HS	AD	SKP
C1	16.05.22	ISSUED FOR CLIENT APPROVAL	HS	AD	SKP
B1	10.05.22	ISSUED FOR IDC	HS	AD	SKP

CLIENT: INDRADHANUSH GAS GRID LIMITED

PMC: VCS QUALITY SERVICES PVT. LTD.

PROJECT: NORTH EAST GAS GRID PHASE-III OF IGGL

TITLE: PIPING & INSTRUMENTATION DIAGRAM LEGENDS (TYPE-1)

SCALE: N.T.S	TOTAL NO. OF SHTS: 1 OF 5		
SIZE	JOB NO.	DRAWING NUMBER	REV.
A1	C221052	C221052-00-PC-LGD-1000	C2

FILE NAME : C221052-00-PC-LGD-1000_SHT. 2 OF 5

IN-LINE ITEM SYMBOLS

- SILENCER
- PULSATION DAMPENER
- DRIP PAN
- REDUCER (CONCENTRIC)
- REDUCER (ECCENTRIC)
- FLAME ARRESTOR
- FLOW — SUCTION STRAINER
- NOZZLE CHECK
- FLOW — Y-TYPE STRAINER
- FLOW — T-TYPE STRAINER
- BASKET STRAINER
- DELUGE STRAINER
- T — TRAP
- FLOW STRAIGHTENING VANE
- SWING ELL

CAPS

- WELDED CAP
- SCREWED CAP
- VFD — VARIABLE FREQUENCY DRIVE

- DIRECT CONNECTION (BLOCK VALVE, OPTIONAL)
- ELECTRICAL CONNECTION
- IN-LINE DEVICE
- FILLED SYSTEM DIRECT CONNECTION
- BLIND FLANGE
- INSULATING FLANGE
- OPEN SPACER
- BLIND SPACER
- SPECTACLE BLIND, OPEN
- SPECTACLE BLIND, CLOSED
- EXPANSION JOINT
- FLOW T CONNECTOR
- INSULATING JOINT
- FLEXIBLE CONNECTION
- FLEXIBLE HOSE CONNECTION
- HOSE CONNECTION
- BP — BLINDING POINT CONNECTION
- SPHERICAL COUPLING WITH CHAINED CAP

SAFETY AND FIRE PROTECTION

- HOSE REEL
- HOSE RACK
- SPRINKLER, OPEN HEAD
- SPRINKLER, CLOSED HEAD
- EW/SS XXX — EYEWASH AND SAFETY SHOWER
- HYDRANT
- MONITOR HYDRANT
- HYDRANT AND HOSE HOUSE
- FIRE HYDRANT WITH HOSE HOUSE AND MONITOR
- FIRE MONITOR
- HEAT ACTUATED DEVICE
- D — DELUGE VALVE
- POST INDICATOR VALVE
- FE — EMERGENCY ALARM BOX
- ANCHOR FLANGE
- TURBINE MOTOR

CONNECTION SYMBOLS

- RS — REMOVABLE SPOOL
- IRS — INSULATING REMOVABLE SPOOL
- UNION OR SCREWED PIPE CONNECTION
- OPEN DRAIN
- CLOSED DRAIN

COMPUTING RELAYS

- Σ — ADD OR TOTALIZATION
- ÷ — DIVIDE
- √ — SQUARE ROOT
- > — HIGH SELECT
- < — LOW SELECT
- X — MULTIPLY
- ▲ — DIFFERENCE OR SUBTRACT
- > — HIGH LIMIT
- < — LOW LIMIT
- : — BIAS
- AVG — AVERAGE
- I/P — CURRENT TO PNEUMATIC CONVERTER

REFERENCE DRAWINGS

DRAWING TITLE	DRAWING NUMBER

VCS QUALITY SERVICES PVT. LTD. XVI

REV.	DATE	DESCRIPTION	PREP.	CHKD.	APPD.
C2	23.05.22	ISSUED FOR CLIENT APPROVAL	HS	AD	SKP
C1	16.05.22	ISSUED FOR CLIENT REVIEW	HS	AD	SKP

CLIENT: INDRADHANUSH GAS GRID LIMITED

PMC: VCS QUALITY SERVICES PVT. LTD.

PROJECT: NORTH EAST GAS GRID PHASE-III OF IGGL

TITLE: PIPING & INSTRUMENTATION DIAGRAM LEGENDS (TYPE-2)

SCALE: N.T.S	TOTAL NO. OF SHTS: 2 OF 5		
SIZE	JOB NO.	DRAWING NUMBER	REV.
A1	C221052	C221052-00-PC-LGD-1000	C2

FILE NAME : C221052-00-PC-LGD-1000_SHT. 3 OF 5

TEMPERATURE SENSORS

T/C T/C
TE TE — DUAL OR DUPLEX THERMOCOUPLE IN ONE WELL

TI — TEMPERATURE INDICATOR

TE — RESISTANCE TEMPERATURE DETECTOR

TIT TE — TEMPERATURE INDICATOR TRANSMITTER

TEMPERATURE INSTRUMENTS

- TG - TEMPERATURE GAUGE
- TI - TEMPERATURE INDICATOR
- TR - TEMPERTURE RECORDER
- TE - TEMPERATURE ELEMENT
- TIC - TEMPERATURE INDICATOR CONTROLLER
- TW - THERMOWELL
- TSV - THERMAL SAFETY VALVE
- TCV - TEMPERATURE CONTROL VALVE
- TIT - TEMPERATURE INDICATOR TRANSMITTER

PRESSURE INSTRUMENTS

- PG - PRESSURE GAUGE
- PIT - PRESSURE INDICATOR TRANSMITTER
- PI - PRESSURE INDICATOR
- PR - PRESSURE RECORDER
- PIC - PRESSURE INDICATOR CONTROLLER
- PS - PRESSURE SWITCH
- PA - PRESSURE ALARM
- DPG - DIFFERENTIAL PRESSURE GAUGE
- DPT - DIFFERENTIAL PRESSURE TRANSMITTER
- DPI - DIFFERENTIAL PRESSURE INDICATOR
- DPIC - DIFFERENTIAL PRESSURE INDICATOR CONTROLLER
- DPR - DIFFERENTIAL PRESSURE RECORDER
- DPV - DIFFERENTIAL PRESSURE CONTROL VALVE
- SAPCV - SELF ACTUATED PRESSURE CONTROL VALVE
- PCV - PRESSURE CONTROL VALVE

TYPICAL INSTRUMENT SYMBOLS

- XX — INSTRUMENT FOR SINGLE MEASURED VARIABLE FIELD MOUNTED
- CONTROL ROOM, FRONT PANEL MOUNTED INSTRUMENT
- CONTROL ROOM, INTERIOR PANEL MOUNTED INSTRUMENT
- LOCAL CONTROL, FRONT PANEL MOUNTED INSTRUMENT
- LOCAL CONTROL, INTERIOR PANEL MOUNTED INSTRUMENT
- CONTROL ROOM INSTRUMENT SCADA
- PROGRAMMABLE LOGIC CONTROLLER FIELD MOUNTED
- S — PROGRAMMABLE LOGIC CONTROLLER CONTROL ROOM MOUNTED
- S — PROGRAMMABLE LOGIC CONTROLLER (SCADA) STATION CONTROL PANEL CONTROL ROOM MOUNTED
- ES — PLANT EMERGENCY SHUTDOWN PLC LOCATED IN THE STATION CONTROL ROOM MOUNTED
- F — FLOW COMPUTER - RTU CONTROL ROOM MOUNTED
- PROGRAMMABLE LOGIC CONTROLLER NOT ACCESSIBLE TO OPERATOR
- I — INTERLOCK
- P — PURGE
- F — FLUSH
- R — MANUAL RESET
- PIG SIGNAL
- SC — STATION CONTROLLER

EQUIPMENT PREFIX

- PL - PIG LAUNCHER
- PR - PIG RECEIVER
- FS - FILTER SEPARATOR
- FM - FLOW METER
- PRS - PRESSURE REGULATING SKID
- KOD - KNOCK OUT DRUM
- CDT - CLOSED DRAIN TANK
- SMP - SUMP PUMP
- V - VESSEL

ABBREVIATIONS

- AG - ABOVE GROUND
- ATM - ATMOSPHERE
- AS - AIR SUPPLY
- ASC - ANTI-SURGE CONTROLLER
- AUTO - AUTOMATIC
- AVT - AUTOMATIC VENT TRAY
- BD - BLOWDOWN
- B.F. - BLIND FLANGE
- B/L - BATTERY LIMIT
- BOP - BOTTOM OF PIPE
- B.P. - BLINDING POINT
- CC - CORROSION COUPON
- CD - CLOSED DRAIN
- CGS - CITY GATE STATION
- CH OP - CHAIN OPERATED
- CL - CENTERLINE
- COD - CONTINUED ON DRAWING
- CNG - COMPRESSED NATURAL GAS
- CP - CORROSION PROBE
- CRV - CREEP RELIEF VALVE
- C.S. - COMPRESSOR STATION
- D - DRAIN
- DBB - DOUBLE BLOCK AND BLEED
- DE - DEENERGIZED
- DET - DETAIL
- DRS - DISTRICT REGLATING STATION
- E - ENERGIZED
- (E) - EXISTING
- ELEV - ELEVATION
- ESD - EMERGENCY SHUTDOWN
- (F) - FURNISHED
- FB - FULL BORE
- F & P - FURNISHED & PIPED
- F & G - FIRE & GAS
- FA - FLAME ARRESTOR
- FC - FAIL CLOSED
- FF - FLAT FACE
- FI - FAIL INDETERMINATE
- FIG - FIGURE
- FIN. - FINISHED
- FL - FAIL OPEN, OR FIRST OUT
- FO - FAIL LOCKED (LAST POSITION)
- FOB - FLAT ON BOTTOM
- FOT - FLAT ON TOP
- FW - FIELD WELD
- GL - GROUND LEVEL
- GO - GEAR OPERATED
- GOV - GAS OPERATED VALVE
- GOOV - GAS OIL ACTUATED VALVE
- X70 - API 5L Gr X70
- A1A / B1A / D1A - 150# / 300# / 600# RATING
- GR - GRADE
- GRV - GEAR OPERATED VALVE
- GS - GAS SUPPLY
- HDR - HEADER
- HH - HANDHOLE
- HOV - HAND OPERATED VALVE
- H.P. - HIGH POINT
- HP - HIGH PRESSURE
- HPV - HYDRO PNEUMATIC VALVE
- HS - HOSE STATION
- IAC - INSULATION ACOUSTIC
- ID - INSIDE DIAMETER
- IDB - INTERMEDIATE DOUBLE BLOCK & BLEED
- ISBL - INSIDE BATTERY LIMIT
- KW - KILOWATT
- KWA - KILOWATT AMPERE
- LB - LINE BREAK SENSING CAPABILITIES
- LC - LOCK CLOSED
- LCP - LOCAL CONTROL PANEL
- LO - LOCK OPEN
- LP - LOW PRESSURE
- LPM - LITERS PER MINUTE
- L.PT - LOW POINT
- LSC - LOAD SHAVING CONTROLLER
- LTCS - LOW TEMPERATURE CARBON STEEL
- M - METER
- MLV - MAIN LINE VALVE
- MOV - MOTOR OPERATED VALVE
- MCC - MOTOR CONTROL CENTER
- MM - MILLIMETER
- MMSCMD - MILLION METRIC STANDARD CUBIC METER PER DAY
- MRS - METIRING & REGLATING STATION
- MS - METER STATION
- MW - MANWAY
- N - NO INSULATION
- NC - NORMALLY CLOSED
- NLL - NORMAL LIQUID LEVEL
- NNF - NORMALLY NO FLOW
- NO - NORMALLY OPEN
- OD - OUTSIDE DIAMETER
- OLS - ONLINE STATION
- OSBL - OUTSIDE BATTERY LIMIT
- OVHD - OVERHEAD
- OWS - OILY WATER SEWER
- PB - PUSH BUTTON
- PC - PURGE CONNECTION
- PCV - PRESSURE CONTROL VALVE
- PGC - PROCESS GAS COMPRESSOR
- PLC - PROGRAMMABLE LOGIC CONTROLLER
- QOEC - QUICK OPENING END CLOSURE
- RB - REDUCE BORE
- RF - RAISED FACE
- RO - RESTRICTION ORIFICE
- RTD - RESISTANCE TEMP. DETECTOR
- RTJ - RING TYPE JOINT
- RTU - REMOTE TERMINAL UNIT
- RS - REMOVABLE SPOOL
- SC - SAMPLE CONNECTION
- SCADA - SUPERVISORY CONTROL AND DATA ACQUISITION SYSTEM
- SCMH - STANDARD CUBIC METER PER HOUR
- SD - SHUTDOWN
- SSV - SLAM SHUT VALVE
- SDV - SHUT DOWN VALVE
- SG - SIGHT GLASS
- SLV - SOLENOID VALVE
- SP - SET POINT
- SR - STRESS RELIEVE
- S/S - SEAM TO SEAM
- SS - SELECTOR SWITCH
- SIL - SAFETY INTEGRITY LEVEL
- SV - SECTIONALIZING VALVE
- SW - SOCKET WELD
- TEMP - TEMPERATURE
- TOP - TAP-OFF POINT
- TL - TANGENT LINE
- TSO - TIGHT SHUT-OFF
- T/T - TANGENT TO TANGENT
- UA - UNIT ALARM
- UG - UNDER GROUND
- UC - UTILITY CONNECTION
- US - UTILITY STATION
- USD - UNIT SHUTDOWN
- V - VENT
- VAC - VACUUM
- VC - VACUUM CONNECTION
- VF - VENDOR FURNISHED
- WC - WATER COLUMN
- W/F - WELD BY FLANGE
- Ø - DIAMETER
- (V) - VENDOR SUPPLY
- XPA - PIG SIGNALLER ALARM (SIGNAL TO LOCAL PANEL / RTU)
- XPI - PIG SIGNALLER INDICATOR
- YIS - PIG INDICATING SWITCH

REFERENCE DRAWINGS

DRAWING TITLE	DRAWING NUMBER

REV.	DATE	DESCRIPTION	PREP.	CHKD.	APPD.
C2	23.05.22	ISSUED FOR CLIENT APPROVAL	HS	AD	SKP
C1	16.05.22	ISSUED FOR CLIENT REVIEW	HS	AD	SKP

CLIENT: INDRADHANUSH GAS GRID LIMITED

PMC: VCS QUALITY SERVICES PVT. LTD.

PROJECT: NORTH EAST GAS GRID PHASE-III OF IGGL

TITLE: PIPING & INSTRUMENTATION DIAGRAM LEGENDS (TYPE-3)

SCALE:	N.T.S	TOTAL NO. OF SHTS:	3 OF 5
SIZE	JOB NO.	DRAWING NUMBER	REV.
A1	C221052	C221052-00-PC-LGD-1000	C2

FILE NAME : C221052-00-PC-LGD-1000_SHT. 4 OF 5

PUMPS, BLOWERS, COMPRESSORS AND FANS

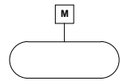

VERTICAL CENTRIFUGAL PUMP
WITH ELECTRIC MOTOR DRIVER

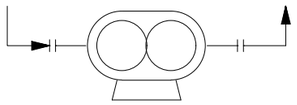

ROTARY PUMP

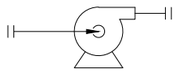

CENTRIFUGAL PUMP

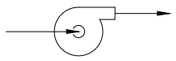

CENTRIFUGAL BLOWER OR FAN

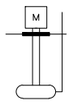

VERTICAL SUBMERSIBLE PUMP

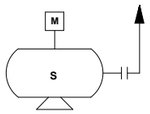

WELL SUMP PUMP WITH
MOTOR

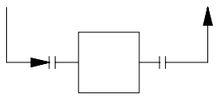

METERING PUMP

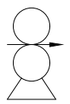

ROTARY SCREW COMPRESSOR

RECIPROCATING COMPRESSOR

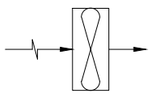

AXIAL FAN

TRANPORTATION EQUIPMENT

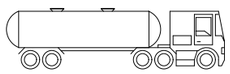

TANK TRUCK

SILENCER

TANKS AND VESSELS

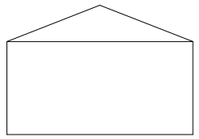

TANK

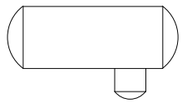

HORIZONTAL DRUM
WITH SUMP

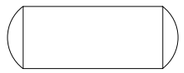

HORIZONTAL VESSEL
(SHOWN)

VERTICAL VESSEL

PRESSURIZED GAS BOTTLE

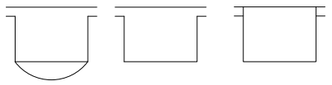

OPEN TANKS

DRIVERS

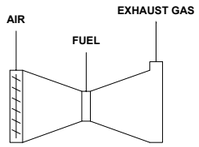

GAS TURBINE

ELECTRIC MOTOR

INTERNAL COMBUSTION

GAS ENGINE

SCRAPPER

SCRAPPER TRAP
(PIG LAUNCHER / RECEIVER)
CONCENTRIC TYPE

SCRAPPER TRAP
(PIG LAUNCHER / RECEIVER)
ECCENTRIC TYPE

FILTRATION EQUIPMENT

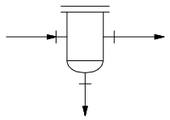

FILTER
(CARTRIDGE TYPE)

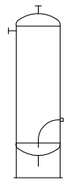

FILTER
SEPARATOR

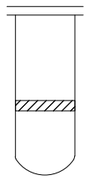

FILTER SEPARATOR
(COALESCER TYPE)

LEVEL SENSORS

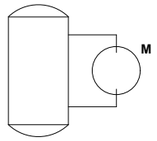

MAGNETIC FLOAT LEVEL GAUGE

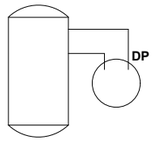

DIFFERENTIAL-PRESSURE TYPE
LEVEL INSTRUMENT

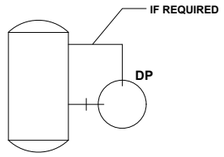

FLANGE-MOUNTED
DIFFERENTIAL-PRESSURE
TYPE LEVEL TRANSMITTER

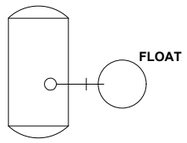

INTERNAL BALL-FLOAT-TYPE
LEVEL INSTRUMENT

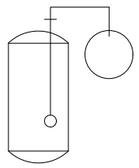

GAGE-BOARD-TYPE
LEVEL INSTRUMENT

REFERENCE DRAWINGS

DRAWING TITLE	DRAWING NUMBER

REV.	DATE	DESCRIPTION	PREP.	CHKD.	APPD.
C2	23.05.22	ISSUED FOR CLIENT APPROVAL	HS	AD	SKP
C1	16.05.22	ISSUED FOR CLIENT REVIEW	HS	AD	SKP

CLIENT: INDRADHANUSH GAS GRID LIMITED

PMC: VCS QUALITY SERVICES PVT. LTD.

PROJECT: NORTH EAST GAS GRID PHASE-III OF IGGL

TITLE: PIPING & INSTRUMENTATION DIAGRAM
LEGENDS (TYPE-4)

SCALE:	N.T.S	TOTAL NO. OF SHTS:	4 OF 5
SIZE	JOB NO.	DRAWING NUMBER	REV.
A1	C221052	C221052-00-PC-LGD-1000	C2

INSTRUMENT IDENTIFICATION LETTERS (NOTE 1)

	FIRST LETTER		SUCCEEDING LETTERS		
	MEASURED OR INITIATING VARIABLE	MODIFIER	READOUT OR FUNCTION PASSIVE	OUTPUT FUNCTION	MODIFIER
A	ANALYSIS		ALARM		
B	BURNER FLAME		BYPASS	USER'S CHOICE	USER'S CHOICE
C	USER'S CHOICE			CONTROL	CLOSED
D	USER'S CHOICE	DIFFERENTIAL			
E	VOLTAGE		PRIMARY ELEMENT		
F	FLOW RATE	RATIO (FRACTION)			
G	GAGING (DIMENSIONAL)		GLASS		
H	HAND (MANUALLY INITIATED)				HIGH
I	CURRENT (ELECTRICAL)		INDICATE		
J	POWER	SCAN			
K	TIME OR TIME-SCHEDULE			CONTROL STATION	
L	LEVEL		LIGHT (DIGITAL STATUS)		LOW
M	USER'S CHOICE				MIDDLE OR INTERMEDIATE
N	USER'S CHOICE		USER'S CHOICE	USER'S CHOICE	USER'S CHOICE
O	USER'S CHOICE		ORIFICE (RESTRICTION)		OPEN
P	PRESSURE OR VACUUM		POINT (TEST CONNECTION)		
Q	QUANTITY OR EVENT	INTEGRATE OR TOTALIZE			
R	RUN	RATIO	RECORD OR PRINT		
S	SPEED OR FREQUENCY	SAFETY		SWITCH	
T	TEMPERATURE			TRANSMIT	
U	MULTIVARIABLE		MALFUNCTION	MALFUNCTION	MALFUNCTION
V	VIBRATION			VALVE, DAMPER, OR LOUVER	
W	WEIGHT OR FORCE				
X	UNCLASSIFIED		SHUTDOWN OR INTERLOCK	SHUTDOWN OR INTERLOCK	UNCLASSIFIED
Y	USER'S CHOICE			RELAY OR COMPUTE	
Z	POSITION			FINAL CONTROL ELEMENT	

SIGNAL AND LINE SYMBOLS

- ELECTRICAL (HARDWIRED)
- CONNECTION TO PROCESS, MECHANICAL LINK OR INSTRUMENT INPUT SUPPLY
- PNEUMATIC SIGNAL
- MECHANICAL LINK
- DIGITAL SIGNAL (SOFTWARE, FIBER OPTIC OR DATA LINK)
- HYDRAULIC SIGNAL
- ELECTROMAGNETIC, SONIC SIGNAL OR LIGHT BEAM
- CAPILLARY TUBING (FILLED SYSTEM)
- LINE GAS/ INST. AIR USED IN VALVE ACTUATOR

VALVE ACTUATORS

- FO (IF REQ'D.) — PNEUMATIC ACTUATOR WITHOUT POSITIONER
- PNEUMATIC ACTUATOR WITH POSITIONER
- (ELECTRIC) M — ROTARY MOTOR (SHOWN TYPICALLY WITH ELECTRIC SIGNAL)
- CYLINDER SINGLE-ACTING, ALSO DOUBLE-ACTING CYLINDER THAT IS ASSEMBLED WITH PILOT, SO THAT ACTUATOR ASSEMBLY IS ACTUATED BY ONE CONTROLLED INPUT
- S — CYLINDER DOUBLE-ACTING WITH ACTUATING PILOT VALVE
- CYLINDER DOUBLE-ACTING ASSEMBLED WITHOUT PILOT
- HAND ACTUATOR (MOUNTED AT TOP SIDE OR BOTTOM OF ACTUATED DEVICE AS APPLICABLE)
- HANDWHEEL
- M — MOTOR OPERATOR (SEE DETAIL ON THIS DRAWING)
- S — SOLENOID
- S R — SOLENOID WITH MANUAL RESET
- S R — SOLENOID WITH REMOTE RESET
- ZS — PNEUMATIC DIAPHRAGM WITH LIMIT SWITCH
- E/H — ELECTRO HYDRAULIC

SELF-ACTUATED DEVICES

FLOW

- FCV (UPSTREAM REG.) (DOWNSTREAM REG.) — FLOW REGULATORS, SELF CONTAINED

HAND

- HCV — HAND CONTROL VALVE IN PROCESS LINE (HCV IS FOR HAND-ACTUATED VALVES USED FOR THROTTLING)
- HS — HAND ACTUATED SWITCHING VALVE IN PNEUMATIC SIGNAL LINE TWO WAY SHOWN - THREE OR FOUR WAY ADD LINES AS REQUIRED

PRESSURE

- PCV — PRESSURE-REDUCING REGULATOR, SELF CONTAINED
- PCV — PRESSURE-REDUCING REGULATOR, WITH EXTERNAL PRESSURE TAP
- PCV — BACKPRESSURE REGULATOR, SELF CONTAINED
- PCV — BACKPRESSURE REGULATOR, WITH EXTERNAL PRESSURE TAP
- PSV XXXX / ABC Z, 1" — PRESSURE RELIEF OR SAFETY VALVE
- PSV — VACUUM RELIEF. ANGLE PATTERN SPRING OR WEIGHT LOADED, OR WITH INTEGRAL PILOT
- TRV — THERMAL RELIEF VALVE

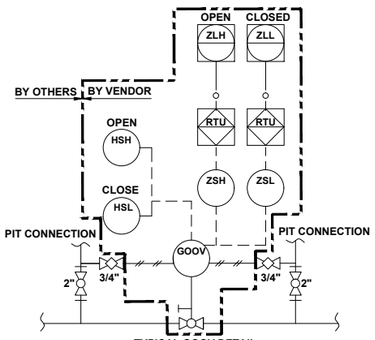

TYPICAL GOOV DETAIL (PID REPRESENTATION)

REFERENCE DRAWINGS	
DRAWING TITLE	DRAWING NUMBER

REV.	DATE	DESCRIPTION	PREP.	CHKD.	APPD.
C2	23.05.22	ISSUED FOR CLIENT APPROVAL	HS	AD	SKP
C1	16.05.22	ISSUED FOR CLIENT REVIEW	HS	AD	SKP

CLIENT: INDRADHANUSH GAS GRID LIMITED

PMC: VCS QUALITY SERVICES PVT. LTD.

PROJECT: NORTH EAST GAS GRID PHASE-III OF IGGL

TITLE: PIPING & INSTRUMENTATION DIAGRAM LEGENDS (TYPE-5)

SCALE:	N.T.S	TOTAL NO. OF SHTS:	5 OF 5
SIZE	JOB NO.	DRAWING NUMBER	REV.
A1	C221052	C221052-00-PC-LGD-1000	C2

FILE NAME : C221052-DIPL-PC-PID-1001

PIG LAUNCHER	
TAG NO.	DT/DIPL-3401
SERVICE FLUID	NATURAL GAS
SIZE MAJOR / MINOR	18" / 12"
DESIGN PRESSURE	92 kg/cm²g
DESIGN TEMPERATURE	-29°C TO 65°C
OPERATING PRESSURE	37 kg/cm²g
OPERATING TEMPERATURE	0°C TO 55°C (C3)

UNIT NO. 34

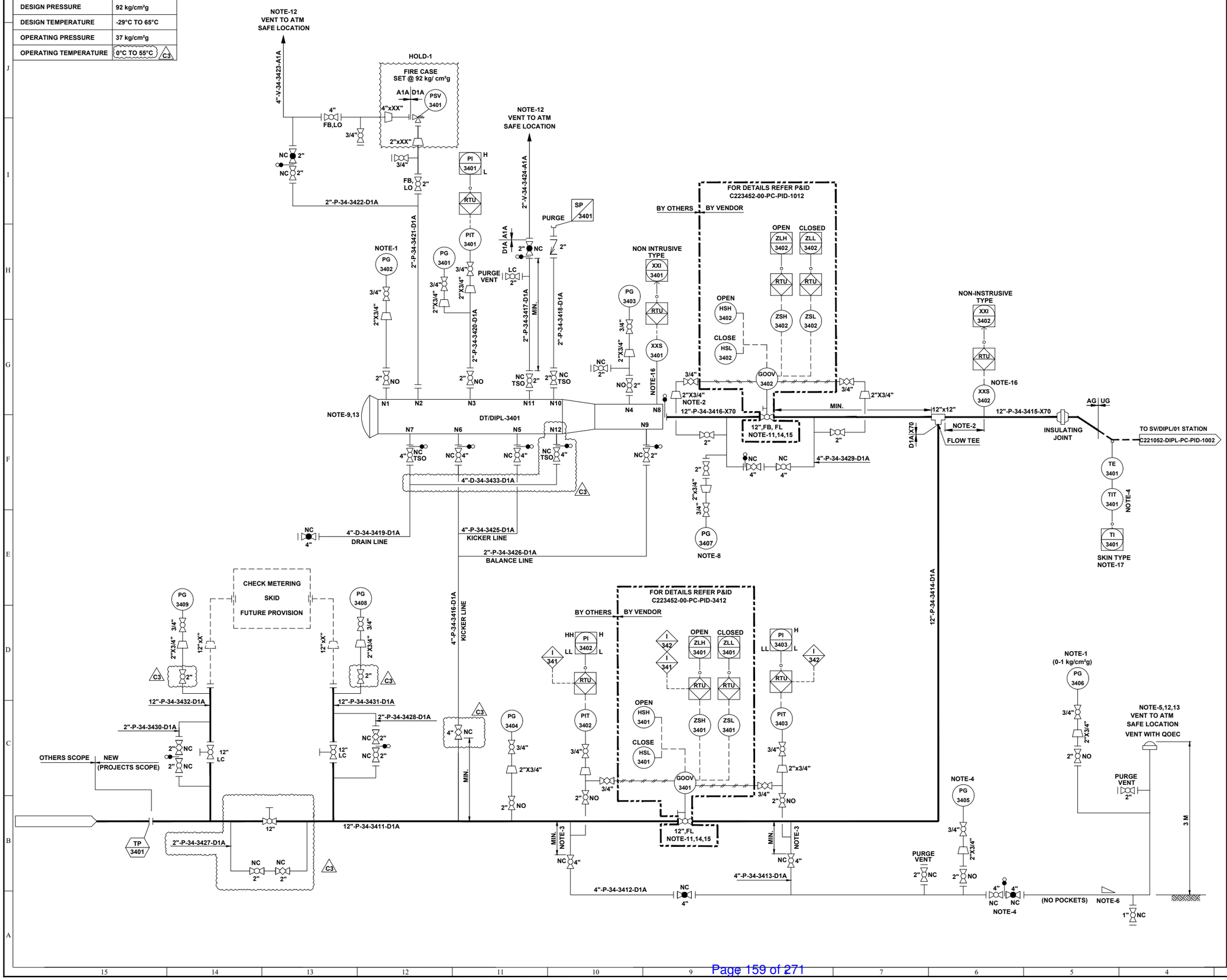

REFERENCE DRAWINGS	
DRAWING TITLE	DRAWING NUMBER
P&ID LEGENDS	C221052-00-PC-LGD-1001 TO 1005

GENERAL NOTES:-

1. ALL LINE NUMBERING AND EQUIPMENT TAG NUMBERING SHALL BE PRE-FIXED WITH PROJECT CODE & AREA CODE "C221052-DIPL".
2. ALL INSTRUMENT TAG NUMBER SHALL BE PRE-FIXED WITH PROJECT CODE & AREA CODE "C221052-DIPL" .
3. ALL BALL VALVE IN PIPELINE EXCEPT IN MAIN LINE (PIGGABLE) SHALL BE REDUCED BORE TYPE

NOTES :-

1. LOW RANGE PRESSURE GAUGE (0-1 kg/cm²g) SHALL BE PROVIDED WITH GAUGE SAVER.
2. DISTANCE SHALL BE AT LEAST EQUAL TO THE LENGTH OF THE LONGEST INTELLIGENT PIG.
3. BRANCH VALVE SHALL BE LOCATED AT MINIMUM DISTANCE.
4. DEPRESSURIZATION VALVE SHALL BE LOCATED IN SUCH A WAY THAT PG-3405 AND TIT-3401 CAN BE READ DURING VENTING.
5. VENT SHALL BE WITH QOEC.
6. ADEQUATE SLOPE TO BE MAINTAINED IN HORIZONTAL SECTION OF PIPE IF ANY FOR LOW POINT DRAIN CONNECTION.
7. JUMPERS SHALL BE PROVIDED ACROSS ALL FLANGES.
8. PG-3407 SHALL HAVE A RANGE OF (0-5 kg/cm²g) SHALL BE PROVIDED WITH GAUGE SAVER AND LEAST COUNT OF 0.1 kg/cm²g. .
9. PROVISION OF A TROLLEY WITH PUSH ROD & PULLING LINE SHALL BE CONSIDERED TO ASSIST LOADING OR REMOVAL OF PIGS FROM THE SCRAPPER TRAP.
10. GAS DETECTORS TO BE PROVIDED IN DOWN WIND DIRECTION NEAR PIG BARRELS TO MONITOR LEAKAGE FROM FAILURE PRONE EQUIPMENTS PARTS,ACCESSORIES,VALVE & PIPES.
11. VALVE POSITION SHALL BE FAIL LAST.
12. ALL VENTS SHALL BE PROVIDED MIN. 3M HIGH FROM NEAREST HIGHEST OPERATING PLATFORM OR NEARBY STRUCTURE WITHIN 15M WHICHEVER IS HIGHER. NON SPARKING MATERIAL (BRASS) SHALL BE USED FOR FLAPPER TYPE VENT CONNECTION.
13. QUICK OPENING END CLOSURE TYPE DOOR CANNOT BE OPENED UNLESS PIG BARREL AND CONNECTED PIPING IS FULLY DEPRESSURIZE.
14. NECESSARY I/O's & SIGNAL FOR INTERFACE WITH SCADA SHALL BE DEVELOPED SEPARATELY.
15. ACTUATOR DETAILS OF GOOV CONTROL LOGIC SHALL BE AS PER P&ID.
16. PIG SIGNALER CONNECTION SHALL BE CLAMP ON TYPES.
17. THERMO PAD SHALL BE WELDED TYPE.

HOLDS:-

1. PSVs INLET & OUTLET SIZE ARE UNDER HOLD. SHALL BE FINALISED POST RECEIPT OF VENDOR DATA.

INTER LOCK :

I 341 — VALVE GOOV-3401 SHALL CLOSE ON LOW LOW PRESSURE OF THE PIPELINE AT STATION INLET.

I 342 — VALVE GOOV-3401 SHALL CLOSE ON LOW LOW PRESSURE OF THE PIPELINE AT STATION OUTLET.

VCS QUALITY SERVICES PVT. LTD. XVI

REV.	DATE	DESCRIPTION	PREP.	CHKD.	APPD.
C3	24.06.22	ISSUED FOR HAZOP	HS	AD	AKP
C2	23.05.22	ISSUED FOR APPROVAL	HS	AD	SKP
C1	13.05.22	ISSUED FOR CLIENT REVIEW	HS	AD	SKP
B1	04.05.22	ISSUED FOR IDC	HS	AD	SKP

CLIENT: INDRADHANUSH GAS GRID LIMITED

PMC: VCS QUALITY SERVICES PVT. LTD.

PROJECT: NORTH EAST GAS GRID PHASE-III OF IGGL

TITLE: P&ID FOR DISPATCH TERMINAL DT/DIPL AT DIMAPUR

SCALE:	N. T .S	TOTAL NO. OF SHTS:	1 OF 1
SIZE	JOB NO.	DRAWING NUMBER	REV.
A1	C221052	C221052-DIPL-PC-PID-1001	C3

FILE NAME : C221052-SGPL-PC-PID-1002

SV STATION	
TAG NO	SV/DIPL/01
SERVICE FLUID	NATURAL GAS
DESIGN PRESSURE	92 kg/cm²g
DESIGN TEMPERATURE	-29 °C TO 65 °C
OPERATING PRESSURE	37 kg/cm²g
OPERATING TEMPERATURE	0°C TO 55°C C3

UNIT NO. 35

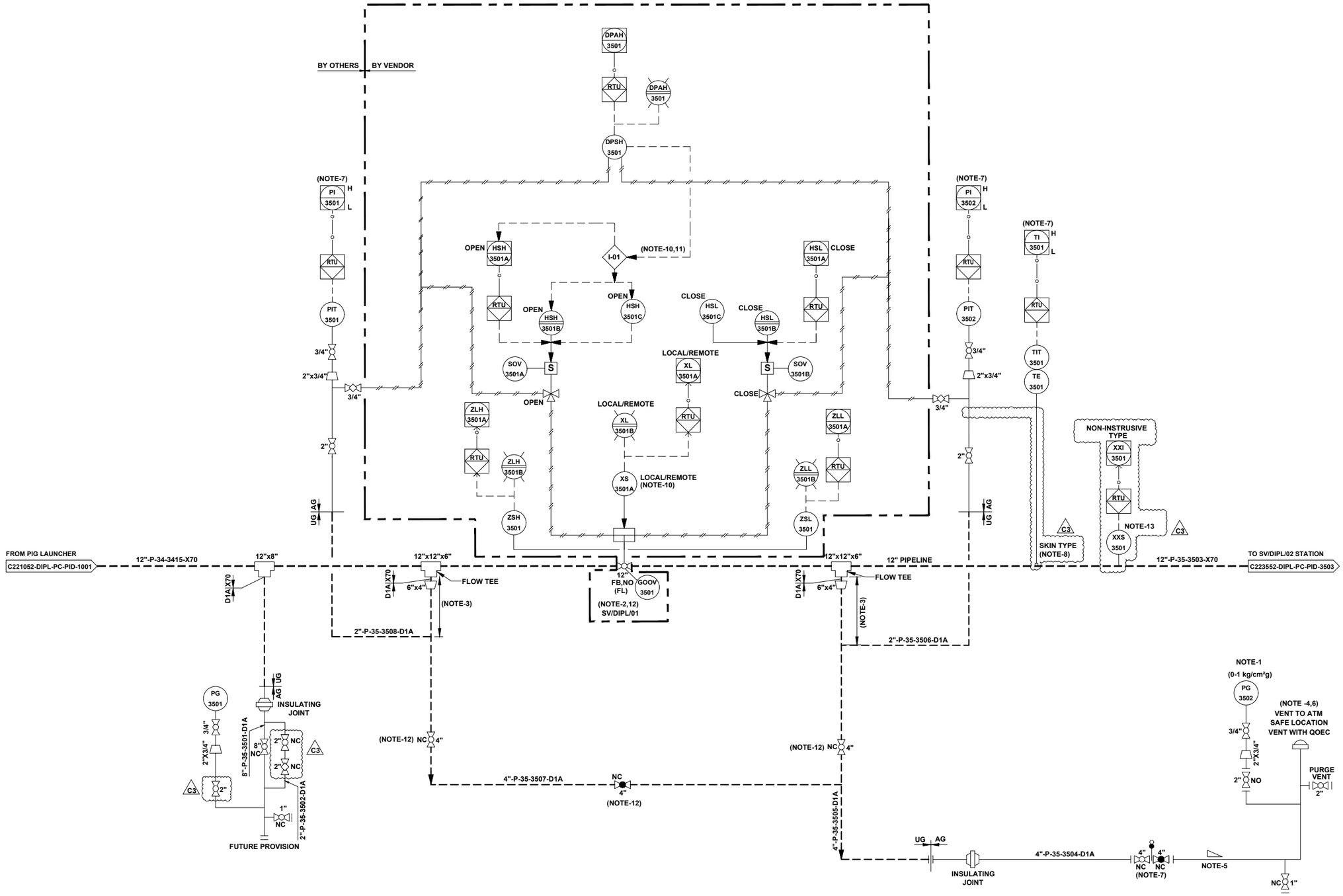

REFERENCE DRAWINGS

DRAWING TITLE	DRAWING NUMBER
P&ID LEGENDS	C221052-00-PC-LGD-1001 TO 1005

GENERAL NOTES:-

1. ALL LINE NUMBERING AND EQUIPMENT TAG NUMBERING SHALL BE PRE-FIXED WITH PROJECT CODE & AREA CODE "C221052-DIPL".
2. ALL INSTRUMENT TAG NUMBER SHALL BE PRE-FIXED WITH PROJECT CODE & AREA CODE "C221052-DIPL" .
3. ALL BALL VALVE IN PIPELINE EXCEPT IN MAIN LINE (PIGGABLE) SHALL BE REDUCED BORE TYPE

NOTES :-

1. LOW RANGE PRESSURE GAUGE (0-1 kg/cm²g) SHALL BE PROVIDED WITH GAUGE SAVER.
2. VALVE SHALL BE FAIL TO STAY FAIL LAST TYPE.
3. MINIMUM DISTANCE SHOULD BE EITHER 1.5D OR 1 METER, WHICHEVER IS HIGHER.
4. VENT SHALL BE LOCATED AT SAFE DISTANCE (MIN. HEIGHT OF 3.0M ABOVE THE HEIGHT WORKING PLATFORM FALLING WITHIN 15.0M RADIUS VENT) AS PER PNGRB GUIDELINES.
5. LOW POINT DRAIN SHALL BE PROVIDED ON DEPRESSURIZATION LINE AT MINIMUM DISTANCE FROM RISER PIPE OF VENT. ADEQUATE SLOPE TO BE MAINTAINED IN HORIZONTAL SECTION OF THE PIPE FOR LOW POINT DRAIN CONNECTION.
6. VENT SHALL BE WITH QOEC.
7. DEPRESSURIZATION VALVE SHALL BE LOCATED IN SUCH A WAY THAT PIT 3501/3502 & TIT-3501 ON TRANSMITTER CAN BE READ DURING VENTING.
8. THERMO PAD SHALL BE WELDED TYPE.
9. JUMPER SHALL BE PROVIDED ACROSS ALL FLANGES.
10. LOCAL / REMOTE
    - COMMAND ACCEPTED FROM SCADA / PANEL IN LOCAL / MAIN CONTROL ROOM.
    - COMMAND ACCEPTED FROM FIELD ONLY.
11. THIS INTERLOCK IS PROVIDED TO INHIBIT THE OPENING OF VALVE FROM REMOTE AS WELL AS LOCAL IN CASE OF HIGH DIFFERENTIAL PRESSURE (> 3.0 kg/ cm²) ACROSS THE VALVE.
12. BURIED VALVE WITH STEM EXTENSION.
13. PIG SIGNALER CONNECTION SHALL BE CLAMP ON TYPES. C3

VCS QUALITY SERVICES PVT. LTD. XVI

REV.	DATE	DESCRIPTION	PREP.	CHKD.	APPD.
C3	24.06.22	ISSUED FOR HAZOP	HS	AD	AKP
C2	23.05.22	ISSUED FOR APPROVAL	HS	AD	SKP
C1	13.05.22	ISSUED FOR CLIENT REVIEW	HS	AD	SKP
B1	04.05.22	ISSUED FOR IDC	HS	AD	SKP

CLIENT: IGGL — INDRADHANUSH GAS GRID LIMITED

PMC: VCS QUALITY SERVICES PVT. LTD.

PROJECT: NORTH EAST GAS GRID PHASE-III OF IGGL

TITLE: P&ID FOR SV/DIPL/01 STATION AT DIMAPUR - KOHIMA - IMPHAL PIPELINE

SCALE:	N.T.S	TOTAL NO. OF SHTS:	1 OF 1
SIZE	JOB NO.	DRAWING NUMBER	REV.
A1	C221052	C221052-DIPL-PC-PID-1002	C3

FILE NAME : C221052-DIPL-PC-PID-1003

SV STATION	
TAG NO	SV/DIPL/02
SERVICE FLUID	NATURAL GAS
DESIGN PRESSURE	92 kg/cm²g
DESIGN TEMPERATURE	-29 °C TO 65 °C
OPERATING PRESSURE	37 kg/cm²g
OPERATING TEMPERATURE	0°C TO 55°C (C3)

UNIT NO. 36

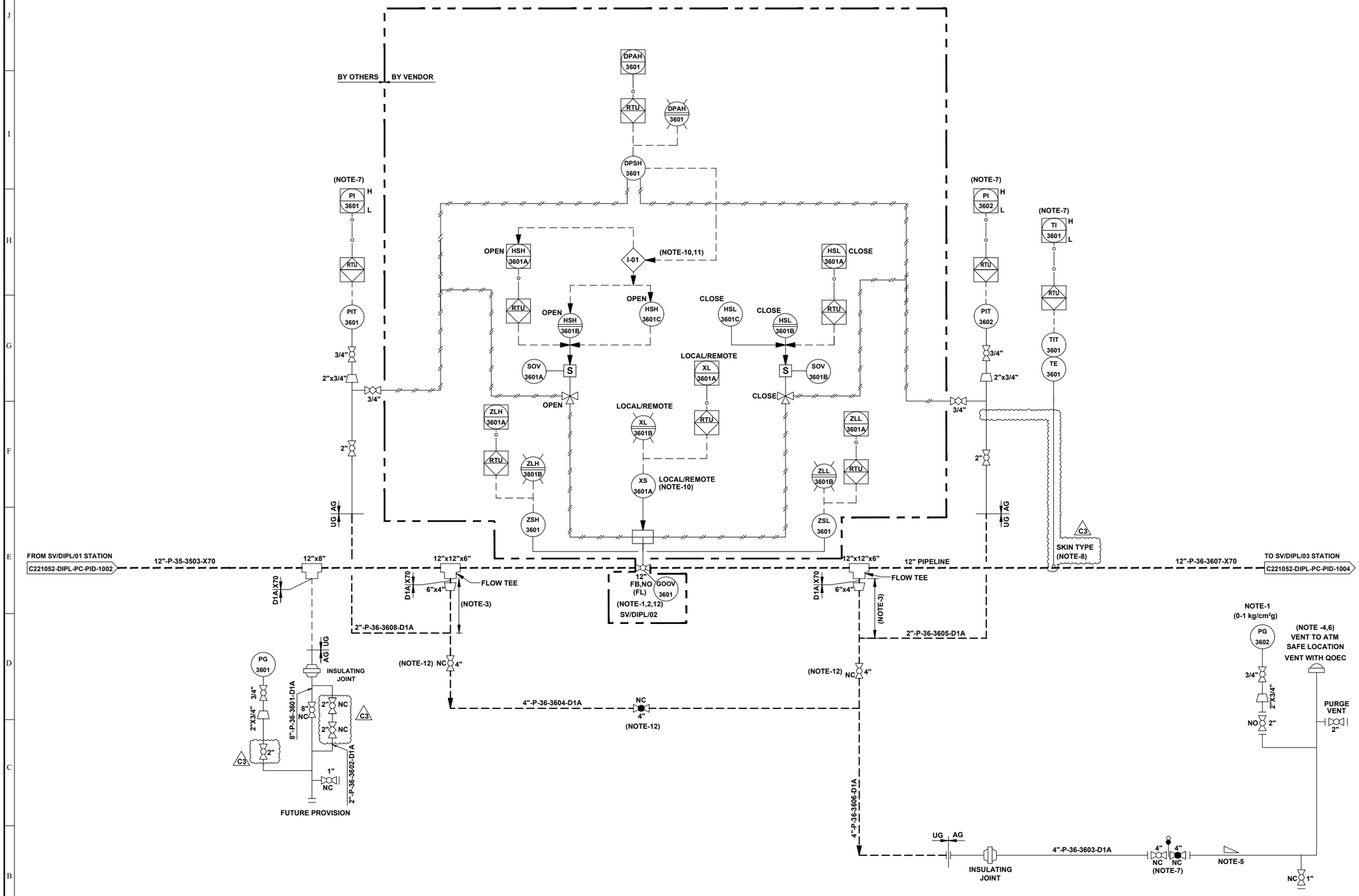

REFERENCE DRAWINGS	
DRAWING TITLE	DRAWING NUMBER
P&ID LEGENDS	C221052-00-PC-LGD-1001 TO 1005

GENERAL NOTES:-

1. ALL LINE NUMBERING AND EQUIPMENT TAG NUMBERING SHALL BE PRE-FIXED WITH PROJECT CODE & AREA CODE "C221052-DIPL".
2. ALL INSTRUMENT TAG NUMBER SHALL BE PRE-FIXED WITH PROJECT CODE & AREA CODE "C221052-DIPL" .
3. ALL BALL VALVE IN PIPELINE EXCEPT IN MAIN LINE (PIGGABLE) SHALL BE REDUCED BORE TYPE

NOTES :-

1. LOW RANGE PRESSURE GAUGE (0-1 kg/cm²g) SHALL BE PROVIDED WITH GAUGE SAVER.
2. VALVE SHALL BE FAIL TO STAY FAIL LAST TYPE.
3. MINIMUM DISTANCE SHOULD BE EITHER 1.5D OR 1 METER, WHICHEVER IS HIGHER.
4. VENT SHALL BE LOCATED AT SAFE DISTANCE (MIN. HEIGHT OF 3.0M ABOVE THE HEIGHT WORKING PLATFORM FALLING WITHIN 15.0M RADIUS VENT) AS PER PNGRB GUIDELINES.
5. LOW POINT DRAIN SHALL BE PROVIDED ON DEPRESSURIZATION LINE AT MINIMUM DISTANCE FROM RISER PIPE OF VENT. ADEQUATE SLOPE TO BE MAINTAINED IN HORIZONTAL SECTION OF THE PIPE FOR LOW POINT DRAIN CONNECTION.
6. VENT SHALL BE WITH QOEC.
7. DEPRESSURIZATION VALVE SHALL BE LOCATED IN SUCH A WAY THAT PIT 3601/3602 & TIT-3601 ON TRANSMITTER CAN BE READ DURING VENTING.
8. THERM PAD SHALL BE WELDED TYPE.
9. JUMPER SHALL BE PROVIDED ACROSS ALL FLANGES.
10. LOCAL / REMOTE
    - COMMAND ACCEPTED FROM SCADA / PANEL IN LOCAL / MAIN CONTROL ROOM.
    - COMMAND ACCEPTED FROM FIELD ONLY.
11. THIS INTERLOCK IS PROVIDED TO INHIBIT THE OPENING OF VALVE FROM REMOTE AS WELL AS LOCAL IN CASE OF HIGH DIFFERENTIAL PRESSURE (> 3.0 kg/ cm²) ACROSS THE VALVE.
12. BURIED VALVE WITH STEM EXTENSION.

REV.	DATE	DESCRIPTION	PREP.	CHKD.	APPD.
C3	24.06.22	ISSUED FOR HAZOP	HS	AD	AKP
C2	23.05.22	ISSUED FOR APPROVAL	HS	AD	SKP
C1	13.05.22	ISSUED FOR CLIENT REVIEW	HS	AD	SKP
B1	04.05.22	ISSUED FOR IDC	HS	AD	SKP

CLIENT: INDRADHANUSH GAS GRID LIMITED

PMC: VCS QUALITY SERVICES PVT. LTD.

PROJECT: NORTH EAST GAS GRID PHASE-III OF IGGL

TITLE: P&ID FOR SV/DIPL/02 STATION AT DIMAPUR - KOHIMA - IMPHAL PIPELINE

SCALE:	N.T.S	TOTAL NO. OF SHTS:	1 OF 1
SIZE	JOB NO.	DRAWING NUMBER	REV.
A1	C221052	C221052-DIPL-PC-PID-1003	C3

FILE NAME : C221052-DIPL-PC-PID-1004

SV STATION	
TAG NO	SV/DIPL/03
SERVICE FLUID	NATURAL GAS
DESIGN PRESSURE	92 kg/cm²g
DESIGN TEMPERATURE	-29 °C TO 65 °C
OPERATING PRESSURE	37 kg/cm²g
OPERATING TEMPERATURE	0°C TO 55°C C3

UNIT NO. 37

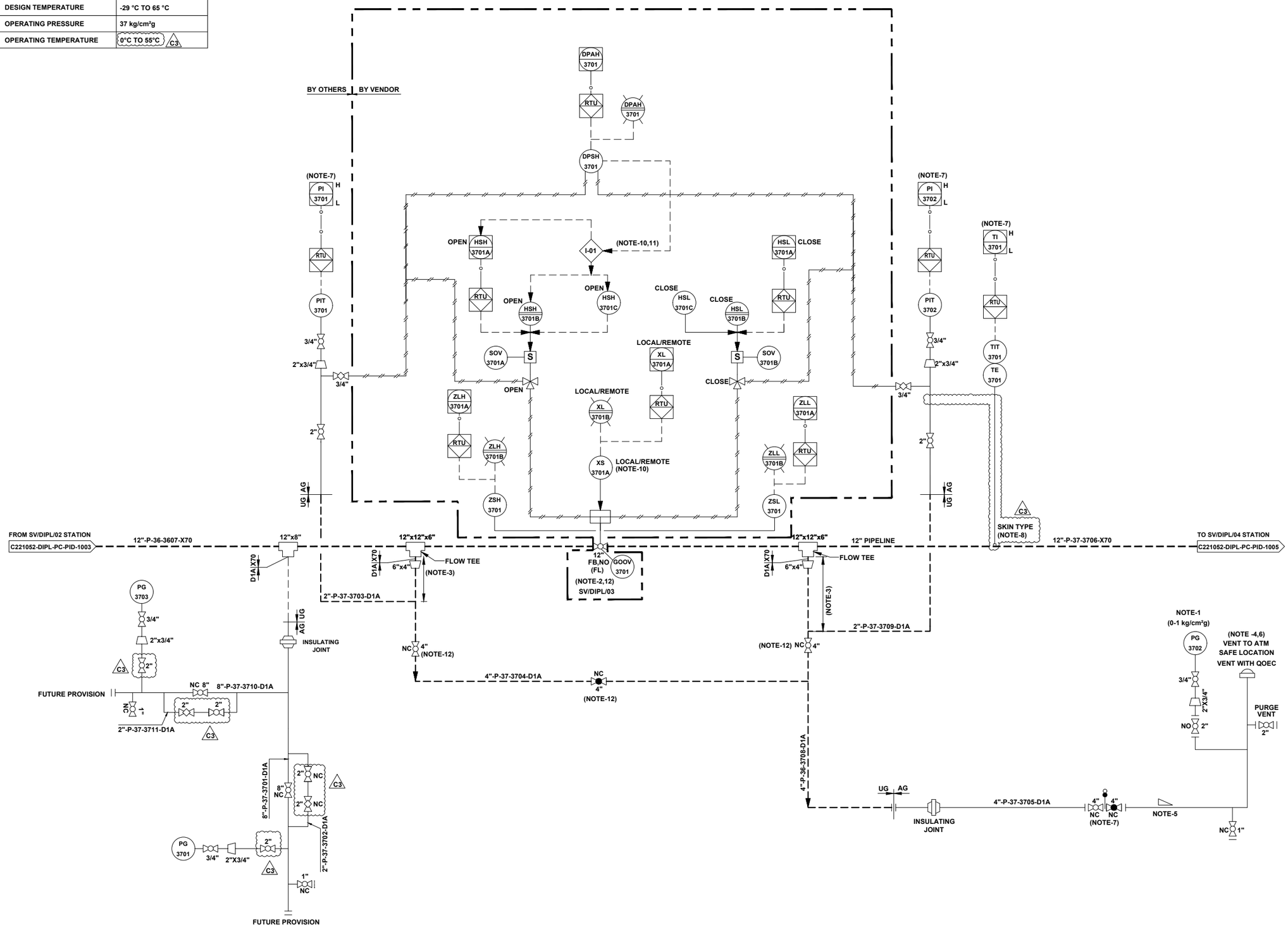

REFERENCE DRAWINGS

DRAWING TITLE	DRAWING NUMBER
P&ID LEGENDS	C221052-00-PC-LGD-1001 TO 1005

GENERAL NOTES:-

1. ALL LINE NUMBERING AND EQUIPMENT TAG NUMBERING SHALL BE PRE-FIXED WITH PROJECT CODE & AREA CODE "C221052-DIPL".
2. ALL INSTRUMENT TAG NUMBER SHALL BE PRE-FIXED WITH PROJECT CODE & AREA CODE "C221052-DIPL" .
3. ALL BALL VALVE IN PIPELINE EXCEPT IN MAIN LINE (PIGGABLE) SHALL BE REDUCED BORE TYPE

NOTES :-

1. LOW RANGE PRESSURE GAUGE (0-1 kg/cm²g) SHALL BE PROVIDED WITH GAUGE SAVER.
2. VALVE SHALL BE FAIL TO STAY FAIL LAST TYPE.
3. MINIMUM DISTANCE SHOULD BE EITHER 1.5D OR 1 METER, WHICHEVER IS HIGHER.
4. VENT SHALL BE LOCATED AT SAFE DISTANCE (MIN. HEIGHT OF 3.0M ABOVE THE HEIGHT WORKING PLATFORM FALLING WITHIN 15.0M RADIUS VENT) AS PER PNGRB GUIDELINES.
5. LOW POINT DRAIN SHALL BE PROVIDED ON DEPRESSURIZATION LINE AT MINIMUM DISTANCE FROM RISER PIPE OF VENT. ADEQUATE SLOPE TO BE MAINTAINED IN HORIZONTAL SECTION OF THE PIPE FOR LOW POINT DRAIN CONNECTION.
6. VENT SHALL BE WITH QOEC.
7. DEPRESSURIZATION VALVE SHALL BE LOCATED IN SUCH A WAY THAT PIT 3701/3702 & TIT-3701 ON TRANSMITTER CAN BE READ DURING VENTING.
8. THERM PAD SHALL BE WELDED TYPE.
9. JUMPER SHALL BE PROVIDED ACROSS ALL FLANGES.
10. LOCAL / REMOTE
    - COMMAND ACCEPTED FROM SCADA / PANEL IN LOCAL / MAIN CONTROL ROOM.
    - COMMAND ACCEPTED FROM FIELD ONLY.
11. THIS INTERLOCK IS PROVIDED TO INHIBIT THE OPENING OF VALVE FROM REMOTE AS WELL AS LOCAL IN CASE OF HIGH DIFFERENTIAL PRESSURE (> 3.0 kg/ cm²) ACROSS THE VALVE.
12. BURIED VALVE WITH STEM EXTENSION.

VCS QUALITY SERVICES PVT. LTD. XVI

REV.	DATE	DESCRIPTION	PREP.	CHKD.	APPD.
C3	24.06.22	ISSUED FOR HAZOP	HS	AD	AKP
C2	23.05.22	ISSUED FOR APPROVAL	HS	AD	SKP
C1	13.05.22	ISSUED FOR CLIENT REVIEW	HS	AD	SKP
B1	04.05.22	ISSUED FOR IDC	HS	AD	SKP

CLIENT: INDRADHANUSH GAS GRID LIMITED

PMC: VCS QUALITY SERVICES PVT. LTD.

PROJECT: NORTH EAST GAS GRID PHASE-III OF IGGL

TITLE: P&ID FOR SV/DIPL/03 CUM RECEIPT TERMINALT STATION AT KOHIMA

SCALE:	N.T.S	TOTAL NO. OF SHTS:	1 OF 1
SIZE	JOB NO.	DRAWING NUMBER	REV.
A1	C221052	C221052-DIPL-PC-PID-1004	C3

FILE NAME : C221052-DIPL-PC-PID-1005

SV STATION	
TAG NO	SV/DIPL/04
SERVICE FLUID	NATURAL GAS
DESIGN PRESSURE	92 kg/cm²g
DESIGN TEMPERATURE	-29 °C TO 65 °C
OPERATING PRESSURE	37 kg/cm²g
OPERATING TEMPERATURE	0°C TO 55°C C3

UNIT NO. 38

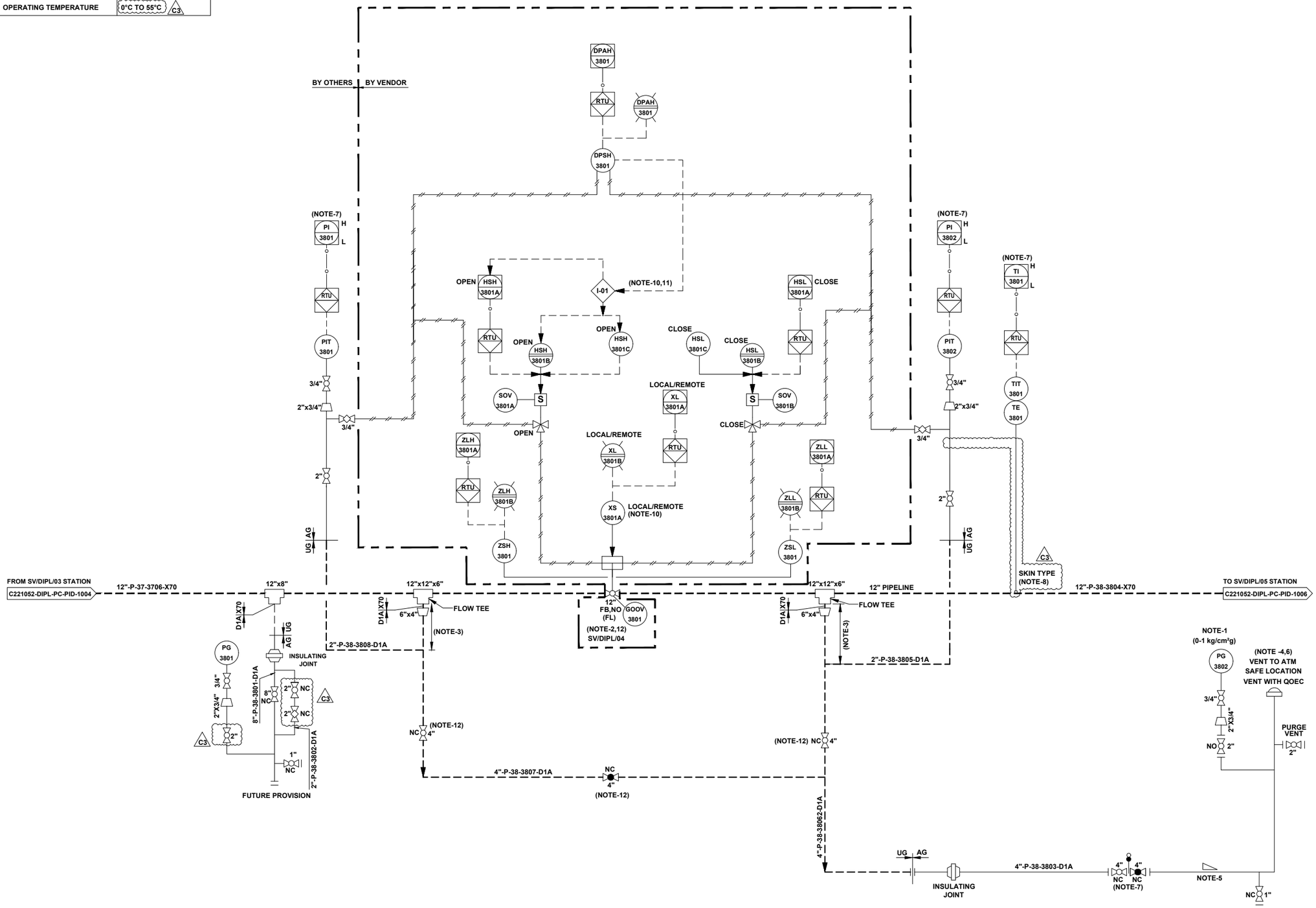

REFERENCE DRAWINGS	
DRAWING TITLE	DRAWING NUMBER
P&ID LEGENDS	C221052-00-PC-LGD-1001 TO 1005

GENERAL NOTES:-

1. ALL LINE NUMBERING AND EQUIPMENT TAG NUMBERING SHALL BE PRE-FIXED WITH PROJECT CODE & AREA CODE "C221052-DIPL".
2. ALL INSTRUMENT TAG NUMBER SHALL BE PRE-FIXED WITH PROJECT CODE & AREA CODE "C221052-DIPL" .
3. ALL BALL VALVE IN PIPELINE EXCEPT IN MAIN LINE (PIGGABLE) SHALL BE REDUCED BORE TYPE

NOTES :-

1. LOW RANGE PRESSURE GAUGE (0-1 kg/cm²g) SHALL BE PROVIDED WITH GAUGE SAVER.
2. VALVE SHALL BE FAIL TO STAY FAIL LAST TYPE.
3. MINIMUM DISTANCE SHOULD BE EITHER 1.5D OR 1 METER, WHICHEVER IS HIGHER.
4. VENT SHALL BE LOCATED AT SAFE DISTANCE (MIN. HEIGHT OF 3.0M ABOVE THE HEIGHT WORKING PLATFORM FALLING WITHIN 15.0M RADIUS VENT) AS PER PNGRB GUIDELINES.
5. LOW POINT DRAIN SHALL BE PROVIDED ON DEPRESSURIZATION LINE AT MINIMUM DISTANCE FROM RISER PIPE OF VENT. ADEQUATE SLOPE TO BE MAINTAINED IN HORIZONTAL SECTION OF THE PIPE FOR LOW POINT DRAIN CONNECTION.
6. VENT SHALL BE WITH QOEC.
7. DEPRESSURIZATION VALVE SHALL BE LOCATED IN SUCH A WAY THAT PIT 3801/3802 & TIT-3801 ON TRANSMITTER CAN BE READ DURING VENTING.
8. THERMOWELL SHALL BE WELDED TYPE.
9. JUMPER SHALL BE PROVIDED ACROSS ALL FLANGES.
10. LOCAL / REMOTE
    - COMMAND ACCEPTED FROM SCADA / PANEL IN LOCAL / MAIN CONTROL ROOM.
    - COMMAND ACCEPTED FROM FIELD ONLY.
11. THIS INTERLOCK IS PROVIDED TO INHIBIT THE OPENING OF VALVE FROM REMOTE AS WELL AS LOCAL IN CASE OF HIGH DIFFERENTIAL PRESSURE (> 3.0 kg/ cm²) ACROSS THE VALVE.
12. BURIED VALVE WITH STEM EXTENSION.

REV.	DATE	DESCRIPTION	PREP.	CHKD.	APPD.
C3	24.06.22	ISSUED FOR HAZOP	HS	AD	AKP
C2	23.05.22	ISSUED FOR APPROVAL	HS	AD	SKP
C1	13.05.22	ISSUED FOR CLIENT REVIEW	HS	AD	SKP
B1	04.05.22	ISSUED FOR IDC	HS	AD	SKP

CLIENT: INDRADHANUSH GAS GRID LIMITED

PMC: VCS QUALITY SERVICES PVT. LTD.

PROJECT: NORTH EAST GAS GRID PHASE-III OF IGGL

TITLE: P&ID FOR SV/DIPL/04 STATION AT DIMAPUR - KOHIMA - IMPHAL PIPELINE

SCALE:	N.T.S	TOTAL NO. OF SHTS:	1 OF 1
SIZE	JOB NO.	DRAWING NUMBER	REV.
A1	C221052	C221052-DIPL-PC-PID-1005	C3

FILE NAME : C221052-DIPL-PC-PID-1006

SV STATION	
TAG NO	SV/DIPL/05
SERVICE FLUID	NATURAL GAS
DESIGN PRESSURE	92 kg/cm²g
DESIGN TEMPERATURE	-29 °C TO 65 °C
OPERATING PRESSURE	37 kg/cm²g
OPERATING TEMPERATURE	0°C TO 55°C (C3)

UNIT NO. 39

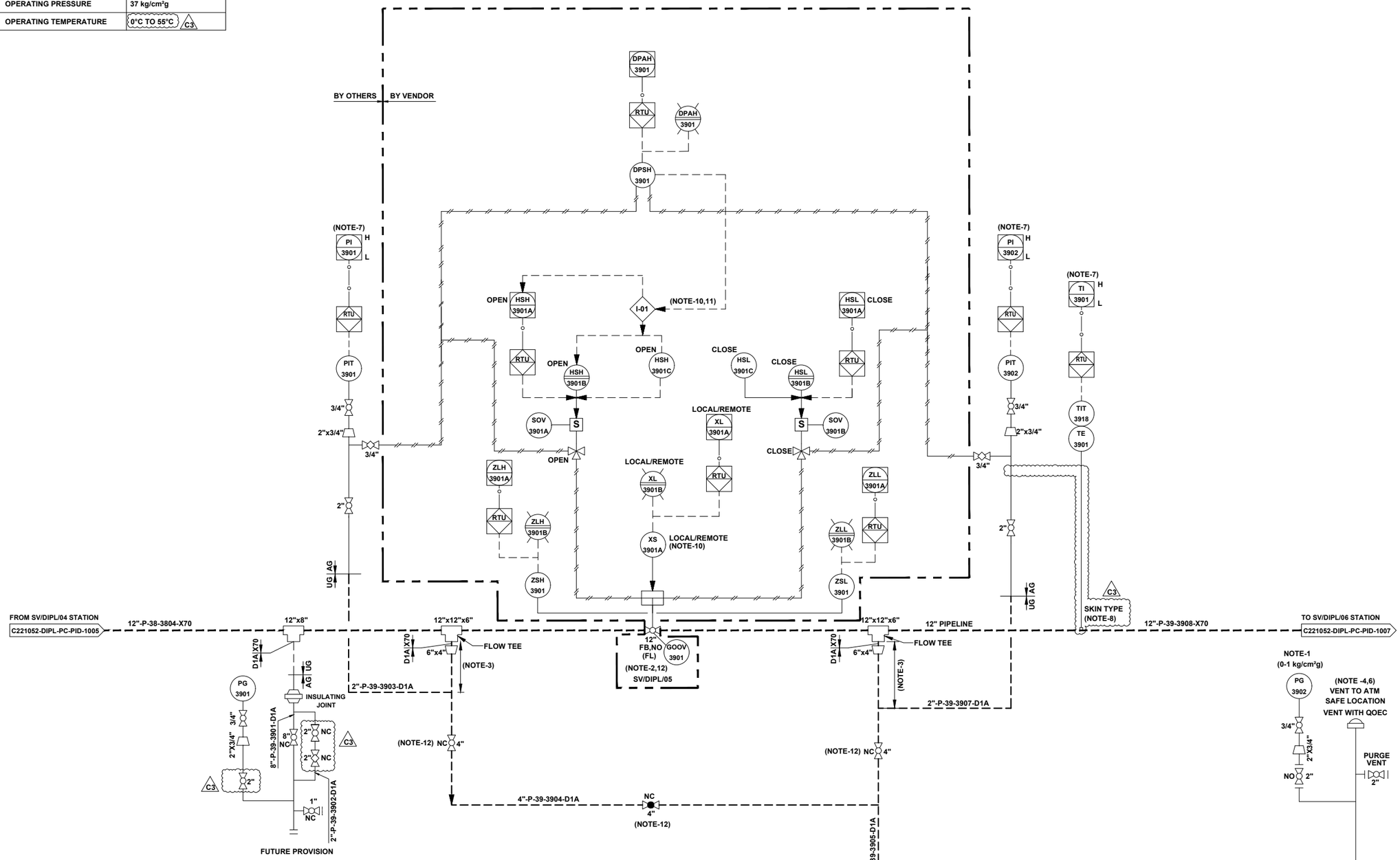

REFERENCE DRAWINGS	
DRAWING TITLE	DRAWING NUMBER
P&ID LEGENDS	C221052-00-PC-LGD-1001 TO 1005

GENERAL NOTES:-

1. ALL LINE NUMBERING AND EQUIPMENT TAG NUMBERING SHALL BE PRE-FIXED WITH PROJECT CODE & AREA CODE "C221052-DIPL".
2. ALL INSTRUMENT TAG NUMBER SHALL BE PRE-FIXED WITH PROJECT CODE & AREA CODE "C221052-DIPL" .
3. ALL BALL VALVE IN PIPELINE EXCEPT IN MAIN LINE (PIGGABLE) SHALL BE REDUCED BORE TYPE

NOTES :-

1. LOW RANGE PRESSURE GAUGE (0-1 kg/cm²g) SHALL BE PROVIDED WITH GAUGE SAVER.
2. VALVE SHALL BE FAIL TO STAY FAIL LAST TYPE.
3. MINIMUM DISTANCE SHOULD BE EITHER 1.5D OR 1 METER, WHICHEVER IS HIGHER.
4. VENT SHALL BE LOCATED AT SAFE DISTANCE (MIN. HEIGHT OF 3.0M ABOVE THE HEIGHT WORKING PLATFORM FALLING WITHIN 15.0M RADIUS VENT) AS PER PNGRB GUIDELINES.
5. LOW POINT DRAIN SHALL BE PROVIDED ON DEPRESSURIZATION LINE AT MINIMUM DISTANCE FROM RISER PIPE OF VENT. ADEQUATE SLOPE TO BE MAINTAINED IN HORIZONTAL SECTION OF THE PIPE FOR LOW POINT DRAIN CONNECTION.
6. VENT SHALL BE WITH QOEC.
7. DEPRESSURIZATION VALVE SHALL BE LOCATED IN SUCH A WAY THAT PIT 3901/3902 & TIT-3901 ON TRANSMITTER CAN BE READ DURING VENTING.
8. THERMO PAD SHALL BE WELDED TYPE.
9. JUMPER SHALL BE PROVIDED ACROSS ALL FLANGES.
10. LOCAL / REMOTE
    - COMMAND ACCEPTED FROM SCADA / PANEL IN LOCAL / MAIN CONTROL ROOM.
    - COMMAND ACCEPTED FROM FIELD ONLY.
11. THIS INTERLOCK IS PROVIDED TO INHIBIT THE OPENING OF VALVE FROM REMOTE AS WELL AS LOCAL IN CASE OF HIGH DIFFERENTIAL PRESSURE (> 3.0 kg/ cm²) ACROSS THE VALVE.
12. BURIED VALVE WITH STEM EXTENSION.

REV.	DATE	DESCRIPTION	PREP.	CHKD.	APPD.
C3	24.06.22	ISSUED FOR HAZOP	HS	AD	AKP
C2	23.05.22	ISSUED FOR APPROVAL	HS	AD	SKP
C1	13.05.22	ISSUED FOR CLIENT REVIEW	HS	AD	SKP
B1	04.05.22	ISSUED FOR IDC	HS	AD	SKP

CLIENT: INDRADHANUSH GAS GRID LIMITED

PMC: VCS QUALITY SERVICES PVT. LTD.

PROJECT: NORTH EAST GAS GRID PHASE-III OF IGGL

TITLE: P&ID FOR SV/DIPL/05 STATION AT DIMAPUR - KOHIMA - IMPHAL PIPELINE

SCALE: N.T.S	TOTAL NO. OF SHTS: 1 OF 1		
SIZE	JOB NO.	DRAWING NUMBER	REV.
A1	C221052	C221052-DIPL-PC-PID-1006	C3

FILE NAME : C221052-DIPL-PC-PID-1007

SV STATION	
TAG NO	SV/DIPL/06
SERVICE FLUID	NATURAL GAS
DESIGN PRESSURE	92 kg/cm²g
DESIGN TEMPERATURE	-29 °C TO 65 °C
OPERATING PRESSURE	37 kg/cm²g
OPERATING TEMPERATURE	0°C TO 55°C C3

UNIT NO. 40

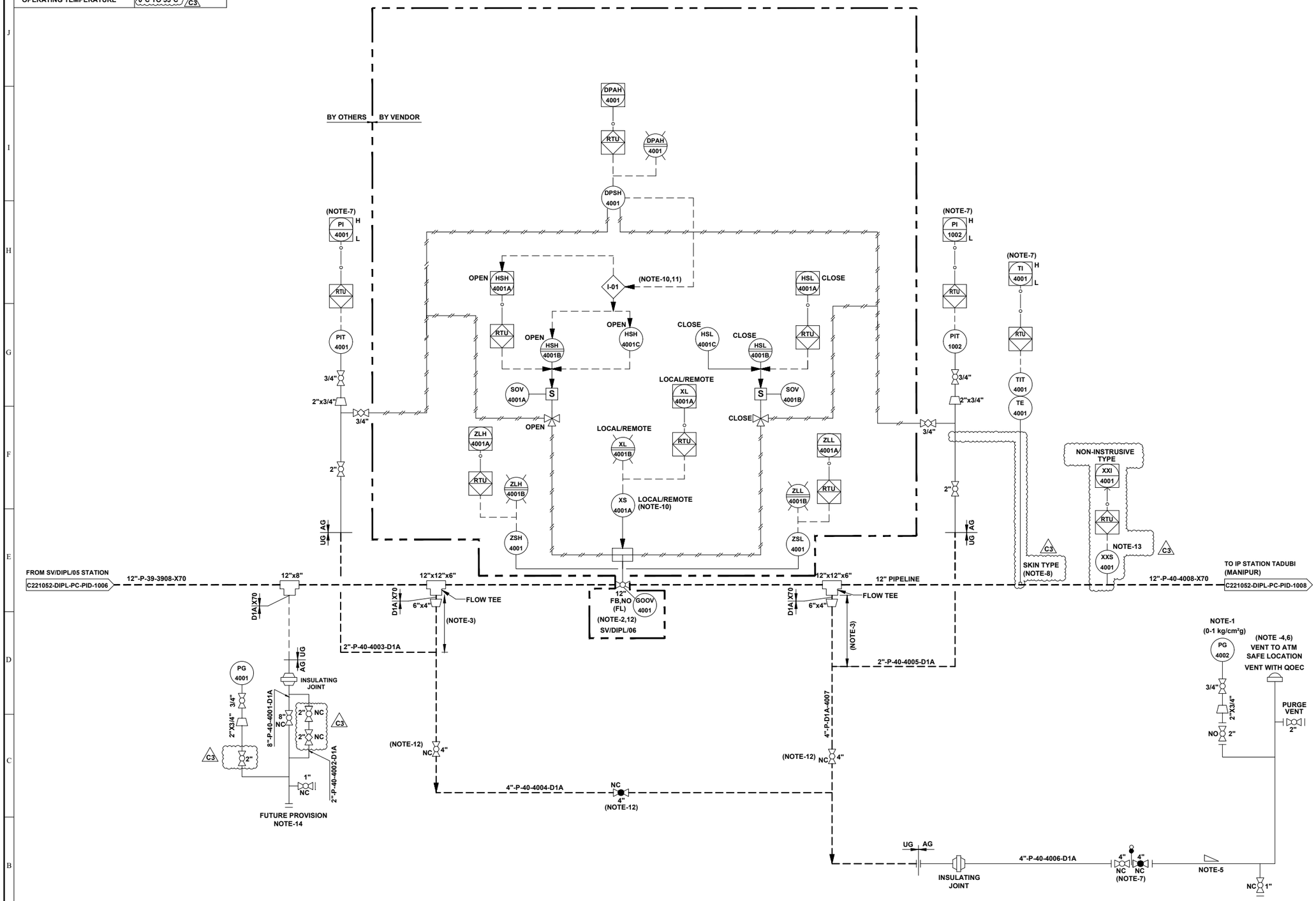

REFERENCE DRAWINGS

DRAWING TITLE	DRAWING NUMBER
P&ID LEGENDS	C221052-00-PC-LGD-1001 TO 1005

GENERAL NOTES:-

1. ALL LINE NUMBERING AND EQUIPMENT TAG NUMBERING SHALL BE PRE-FIXED WITH PROJECT CODE & AREA CODE "C221052-DIPL".
2. ALL INSTRUMENT TAG NUMBER SHALL BE PRE-FIXED WITH PROJECT CODE & AREA CODE "C221052-DIPL" .
3. ALL BALL VALVE IN PIPELINE EXCEPT IN MAIN LINE (PIGGABLE) SHALL BE REDUCED BORE TYPE

NOTES :-

1. LOW RANGE PRESSURE GAUGE (0-1 kg/cm²g) SHALL BE PROVIDED WITH GAUGE SAVER.
2. VALVE SHALL BE FAIL TO STAY FAIL LAST TYPE.
3. MINIMUM DISTANCE SHOULD BE EITHER 1.5D OR 1 METER, WHICHEVER IS HIGHER.
4. VENT SHALL BE LOCATED AT SAFE DISTANCE (MIN. HEIGHT OF 3.0M ABOVE THE HEIGHT WORKING PLATFORM FALLING WITHIN 15.0M RADIUS VENT) AS PER PNGRB GUIDELINES.
5. LOW POINT DRAIN SHALL BE PROVIDED ON DEPRESSURIZATION LINE AT MINIMUM DISTANCE FROM RISER PIPE OF VENT. ADEQUATE SLOPE TO BE MAINTAINED IN HORIZONTAL SECTION OF THE PIPE FOR LOW POINT DRAIN CONNECTION.
6. VENT SHALL BE WITH QOEC.
7. DEPRESSURIZATION VALVE SHALL BE LOCATED IN SUCH A WAY THAT PIT 4001/4002 & TIT-4001 ON TRANSMITTER CAN BE READ DURING VENTING.
8. THERMO PAD SHALL BE WELDED TYPE.
9. JUMPER SHALL BE PROVIDED ACROSS ALL FLANGES.
10. LOCAL / REMOTE
    - COMMAND ACCEPTED FROM SCADA / PANEL IN LOCAL / MAIN CONTROL ROOM.
    - COMMAND ACCEPTED FROM FIELD ONLY.
11. THIS INTERLOCK IS PROVIDED TO INHIBIT THE OPENING OF VALVE FROM REMOTE AS WELL AS LOCAL IN CASE OF HIGH DIFFERENTIAL PRESSURE (> 3.0 kg/ cm²) ACROSS THE VALVE.
12. BURIED VALVE WITH STEM EXTENSION.
13. PIG SIGNALER CONNECTION SHALL BE CLAMP ON TYPES. C3

REV.	DATE	DESCRIPTION	PREP.	CHKD.	APPD.
C3	24.06.22	ISSUED FOR HAZOP	HS	AD	AKP
C2	23.05.22	ISSUED FOR APPROVAL	HS	AD	SKP
C1	13.05.22	ISSUED FOR CLIENT REVIEW	HS	AD	SKP
B1	04.05.22	ISSUED FOR IDC	HS	AD	SKP

CLIENT: INDRADHANUSH GAS GRID LIMITED

PMC: VCS QUALITY SERVICES PVT. LTD.

PROJECT: NORTH EAST GAS GRID PHASE-III OF IGGL

TITLE: P&ID FOR SV/DIPL/06 STATION AT DIMAPUR - KOHIMA - IMPHAL PIPELINE

SCALE:	N.T.S	TOTAL NO. OF SHTS:	1 OF 1
SIZE	JOB NO.	DRAWING NUMBER	REV.
A1	C221052	C221052-DIPL-PC-PID-1007	C3

FILE NAME : C221052-DIPL-PC-PID-1008

PIG LAUNCHER / PIG RECEIVER	
TAG NO.	IP/DIPL-4101 / 4102
SERVICE FLUID	NATURAL GAS
SIZE MAJOR / MINOR	18" / 12"
DESIGN PRESSURE	92 kg/ cm²g
DESIGN TEMPERATURE	-29°C TO 65°C
OPERATING PRESSURE	37 kg/cm²g
OPERATING TEMPERATURE	0°C TO 55°C (C3)

UNIT NO. 41

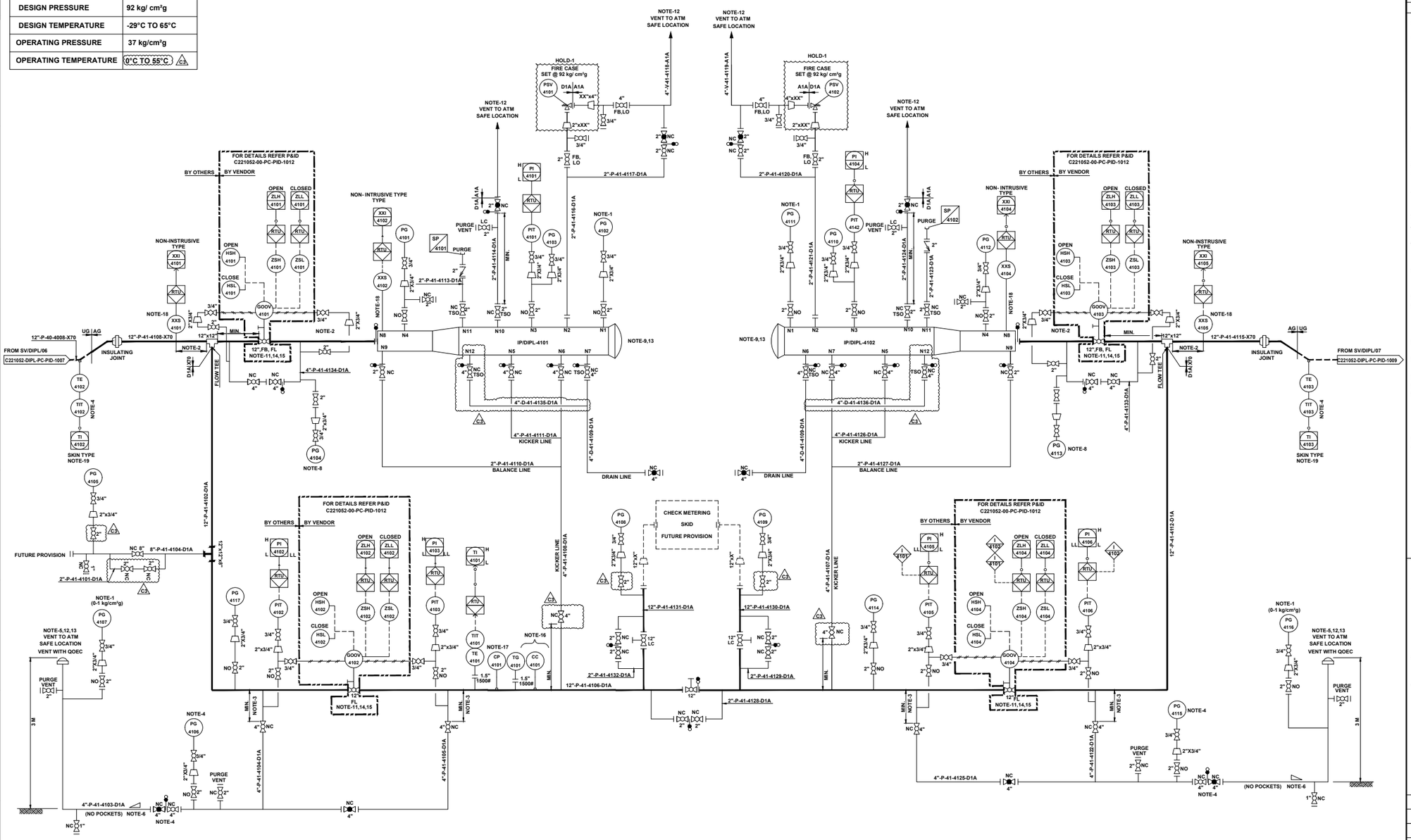

REFERENCE DRAWINGS	
DRAWING TITLE	DRAWING NUMBER
P&ID LEGENDS	C221052-00-PC-LGD-1001 TO 1005

GENERAL NOTES:-

1. ALL LINE NUMBERING AND EQUIPMENT TAG NUMBERING SHALL BE PRE-FIXED WITH PROJECT CODE & AREA CODE "C221052-DIPL".
2. ALL INSTRUMENT TAG NUMBER SHALL BE PRE-FIXED WITH PROJECT CODE & AREA CODE "C221052-DIPL" .
3. ALL BALL VALVE IN PIPELINE EXCEPT IN MAIN LINE (PIGGABLE) SHALL BE REDUCED BORE TYPE

NOTES :-

1. LOW RANGE PRESSURE GAUGE (0-1 kg/cm²g) PROVIDED WITH GAUGE SAVER.
2. DISTANCE SHALL BE AT LEAST EQUAL TO THE LENGTH OF THE LONGEST INTELLIGENT PIG.
3. BRANCH VALVE SHALL BE LOCATED AT MINIMUM DISTANCE.
4. DEPRESSURIZATION VALVE SHALL BE LOCATED IN SUCH A WAY THAT PG-4106, PG-4115 & TIT-4102 / 4103 CAN BE READ DURING VENTING.
5. VENT SHALL BE WITH QOEC.
6. ADEQUATE SLOPE TO BE MAINTAINED IN HORIZONTAL SECTION OF PIPE IF ANY FOR LOW POINT DRAIN CONNECTION.
7. JUMPERS SHALL BE PROVIDED ACROSS ALL FLANGES.
8. PG-4104 & 4113 SHALL HAVE A RANGE OF (0-5 kg/cm²g) SHALL BE PROVIDED WITH GAUGE SAVER AND LEAST COUNT OF 0.1 kg/cm²g..
9. PROVISION OF A TROLLEY WITH PUSH ROD & PULLING LINE SHALL BE CONSIDERED TO ASSIST LOADING OR REMOVAL OF PIGS FROM THE SCRAPPER TRAP.
10. GAS DETECTORS TO BE PROVIDED IN DOWN WIND DIRECTION NEAR FLOW METERS, PIG BARRELS TO MONITOR LEAKAGE FROM FAILURE PRONE EQUIPMENTS PARTS,ACCESSORIES,VALVE & PIPES.
11. VALVE POSITION SHALL BE FAIL LAST.
12. ALL VENTS SHALL BE PROVIDED MIN. 3M HIGH FROM NEAREST HIGHEST OPERATING PLATFORM OR NEARBY STRUCTURE WITHIN 15M WHICHEVER IS HIGHER. NON SPARKING MATERIAL (BRASS) SHALL BE USED FOR FLAPPER TYPE VENT CONNECTION.
13. QUICK OPENING END CLOSURE TYPE DOOR CANNOT BE OPENED UNLESS PIG BARREL AND CONNECTED PIPING IS FULLY DEPRESSURIZE.
14. NECESSARY I/O's & SIGNAL FOR INTERFACE WITH SCADA SHALL BE DEVELOPED SEPARATELY.
15. ACTUATOR DETAILS OF GOV CONTROL LOGIC SHALL BE AS PER P&ID.
16. 'CC' SHALL BE OF WEIGHT LOSS TYPE.
17. ONLINE RETRIEVAL TYPE CORROSION MONITORING COUPON AND CORROSION PROBE SHALL BE PROVIDED FURTHER WHEREVER SCADA SYSTEM ARE AVAILABLE, THIS SYSTEM SHALL BE ONLINE SCADA COMPATIBLE OTHERWISE DATA SHALL BE COLLECTED BY OFFLINE DATA LOGGER.
18. PIG SIGNALER CONNECTION SHALL BE CLAMP ON TYPES.
19. THERMO PAD SHALL BE WELDED TYPE.

HOLDS:-

1. PSVs INLET & OUTLET SIZE ARE UNDER HOLD. SHALL BE FINALISED POST RECEIPT OF VENDOR DATA.

INTER LOCK :

1 (4101) VALVE GOOV-4104 SHALL CLOSE ON LOW LOW PRESSURE OF THE PIPELINE AT STATION INLET.

1 (4102) VALVE GOOV-4104 SHALL CLOSE ON LOW LOW PRESSURE OF THE PIPELINE AT STATION OUTLET.

REV.	DATE	DESCRIPTION	PREP.	CHKD.	APPD.
C3	24.06.22	ISSUED FOR HAZOP	HS	AD	AKP
C2	23.05.22	ISSUED FOR APPROVAL	HS	AD	SKP
C1	13.05.22	ISSUED FOR CLIENT REVIEW	HS	AD	SKP
B1	04.05.22	ISSUED FOR IDC	HS	AD	SKP

CLIENT: INDRADHANUSH GAS GRID LIMITED

PMC: VCS QUALITY SERVICES PVT. LTD.

PROJECT: NORTH EAST GAS GRID PHASE-III OF IGGL

TITLE: P&ID FOR IP STATION AT TADUBI (MANIPUR)

SCALE: N. T .S		TOTAL NO. OF SHTS: 1 OF 1	
SIZE	JOB NO.	DRAWING NUMBER	REV.
A1	C221052	C221052-DIPL-PC-PID-1008	C3

FILE NAME : C221052-DIPL-PC-PID-1009

SV STATION	
TAG NO	SV/DIPL/07
SERVICE FLUID	NATURAL GAS
DESIGN PRESSURE	92 kg/cm²g
DESIGN TEMPERATURE	-29 °C TO 65 °C
OPERATING PRESSURE	37 kg/cm²g
OPERATING TEMPERATURE	0°C TO 55°C C3

UNIT NO. 42

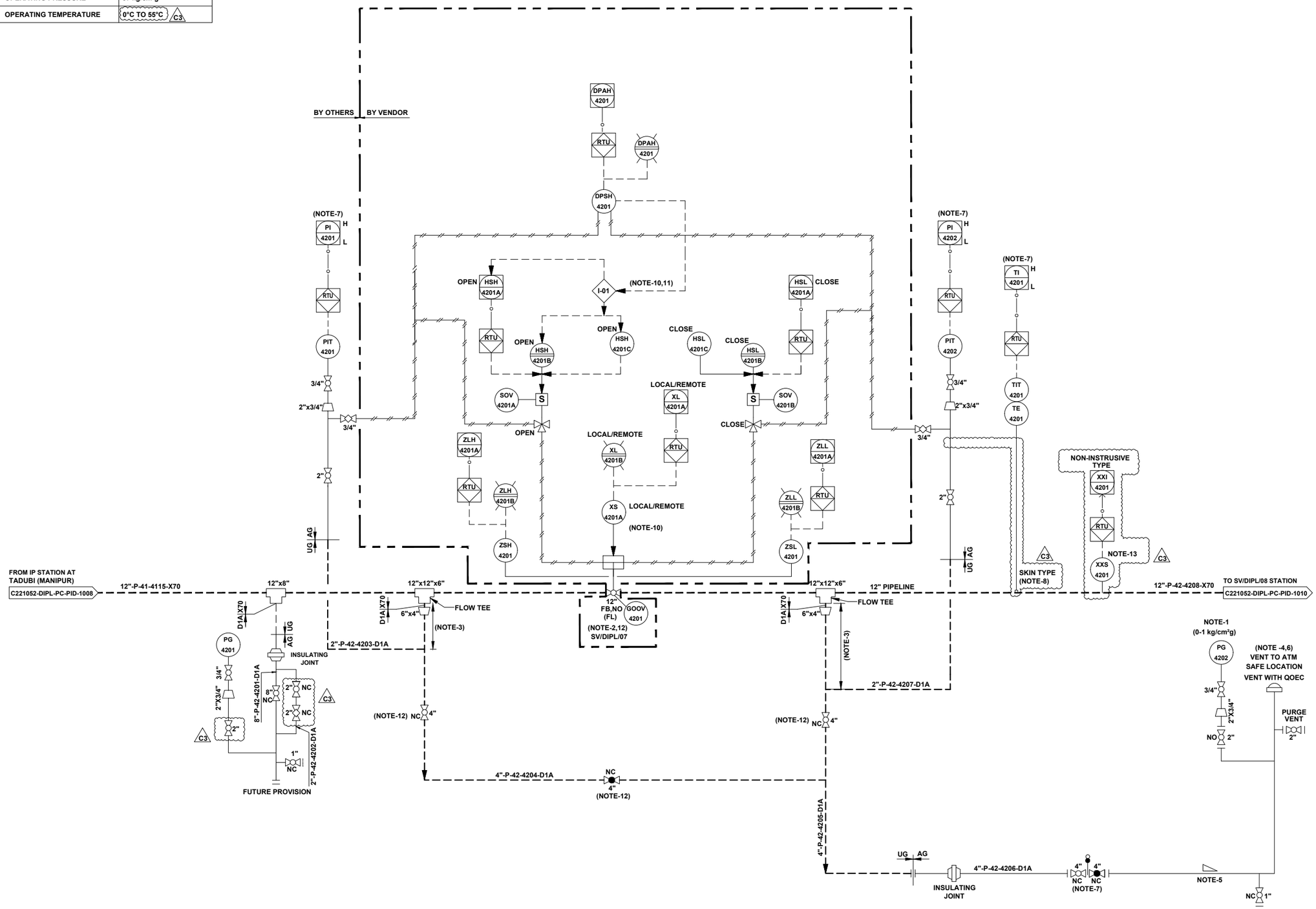

REFERENCE DRAWINGS	
DRAWING TITLE	DRAWING NUMBER
P&ID LEGENDS	C221052-00-PC-LGD-1001 TO 1005

GENERAL NOTES:-

1. ALL LINE NUMBERING AND EQUIPMENT TAG NUMBERING SHALL BE PRE-FIXED WITH PROJECT CODE & AREA CODE "C221052-DIPL".
2. ALL INSTRUMENT TAG NUMBER SHALL BE PRE-FIXED WITH PROJECT CODE & AREA CODE "C221052-DIPL" .
3. ALL BALL VALVE IN PIPELINE EXCEPT IN MAIN LINE (PIGGABLE) SHALL BE REDUCED BORE TYPE

NOTES :-

1. LOW RANGE PRESSURE GAUGE (0-1 kg/cm²g) SHALL BE PROVIDED WITH GAUGE SAVER.
2. VALVE SHALL BE FAIL TO STAY FAIL LAST TYPE.
3. MINIMUM DISTANCE SHOULD BE EITHER 1.5D OR 1 METER, WHICHEVER IS HIGHER.
4. VENT SHALL BE LOCATED AT SAFE DISTANCE (MIN. HEIGHT OF 3.0M ABOVE THE HEIGHT WORKING PLATFORM FALLING WITHIN 15.0M RADIUS VENT) AS PER PNGRB GUIDELINES.
5. LOW POINT DRAIN SHALL BE PROVIDED ON DEPRESSURIZATION LINE AT MINIMUM DISTANCE FROM RISER PIPE OF VENT. ADEQUATE SLOPE TO BE MAINTAINED IN HORIZONTAL SECTION OF THE PIPE FOR LOW POINT DRAIN CONNECTION.
6. VENT SHALL BE WITH QOEC.
7. DEPRESSURIZATION VALVE SHALL BE LOCATED IN SUCH A WAY THAT PIT 4201/4202 & TIT-4201 ON TRANSMITTER CAN BE READ DURING VENTING.
8. THERMO PAD SHALL BE WELDED TYPE.
9. JUMPER SHALL BE PROVIDED ACROSS ALL FLANGES.
10. LOCAL / REMOTE
    - COMMAND ACCEPTED FROM SCADA / PANEL IN LOCAL / MAIN CONTROL ROOM.
    - COMMAND ACCEPTED FROM FIELD ONLY.
11. THIS INTERLOCK IS PROVIDED TO INHIBIT THE OPENING OF VALVE FROM REMOTE AS WELL AS LOCAL IN CASE OF HIGH DIFFERENTIAL PRESSURE (> 3.0 kg/ cm²) ACROSS THE VALVE.
12. BURIED VALVE WITH STEM EXTENSION.
13. PIG SIGNALER CONNECTION SHALL BE CLAMP ON TYPES. C3

VCS QUALITY SERVICES PVT. LTD. XVI

REV.	DATE	DESCRIPTION	PREP.	CHKD.	APPD.
C3	24.06.22	ISSUED FOR HAZOP	HS	AD	AKP
C2	23.05.22	ISSUED FOR APPROVAL	HS	AD	SKP
C1	13.05.22	ISSUED FOR CLIENT REVIEW	HS	AD	SKP
B1	04.05.22	ISSUED FOR IDC	HS	AD	SKP

CLIENT: INDRADHANUSH GAS GRID LIMITED

PMC: VCS QUALITY SERVICES PVT. LTD.

PROJECT: NORTH EAST GAS GRID PHASE-III OF IGGL

TITLE: P&ID FOR SV/DIPL/07 STATION AT DIMAPUR - KOHIMA - IMPHAL PIPELINE

SCALE:	N.T.S	TOTAL NO. OF SHTS:	1 OF 1
SIZE	JOB NO.	DRAWING NUMBER	REV.
A1	C221052	C221052-DIPL-PC-PID-1009	C3

FILE NAME : C221052-DIPL-PC-PID-1010

SV STATION	
TAG NO	SV/DIPL/08
SERVICE FLUID	NATURAL GAS
DESIGN PRESSURE	92 kg/cm²g
DESIGN TEMPERATURE	-29 °C TO 65 °C
OPERATING PRESSURE	37 kg/cm²g
OPERATING TEMPERATURE	0°C TO 55°C C3

UNIT NO. 43

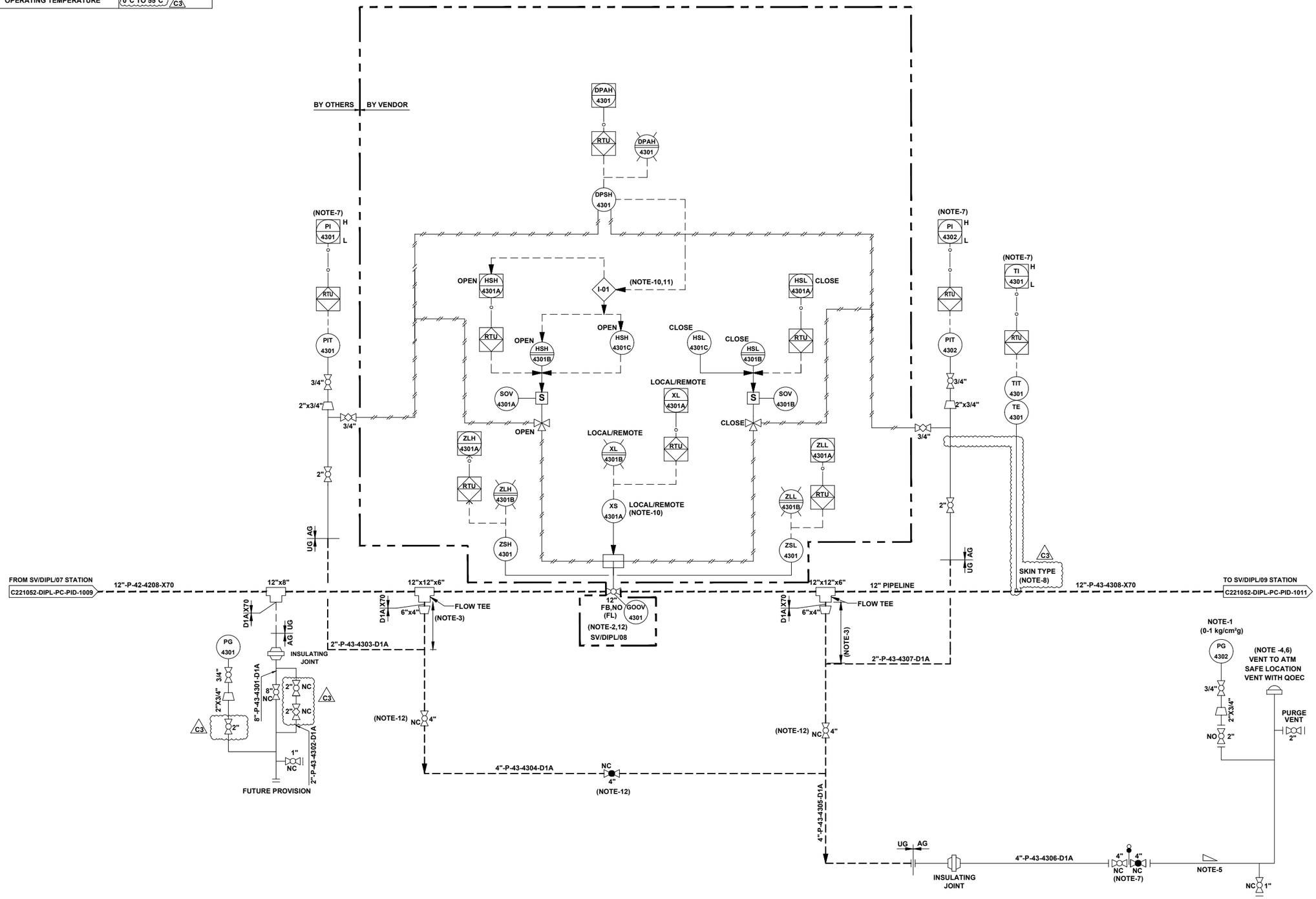

REFERENCE DRAWINGS	
DRAWING TITLE	DRAWING NUMBER
P&ID LEGENDS	C221052-00-PC-LGD-1001 TO 1005

GENERAL NOTES:-

1. ALL LINE NUMBERING AND EQUIPMENT TAG NUMBERING SHALL BE PRE-FIXED WITH PROJECT CODE & AREA CODE "C221052-DIPL".
2. ALL INSTRUMENT TAG NUMBER SHALL BE PRE-FIXED WITH PROJECT CODE & AREA CODE "C221052-DIPL" .
3. ALL BALL VALVE IN PIPELINE EXCEPT IN MAIN LINE (PIGGABLE) SHALL BE REDUCED BORE TYPE

NOTES :-

1. LOW RANGE PRESSURE GAUGE (0-1 kg/cm²g) SHALL BE PROVIDED WITH GAUGE SAVER.
2. VALVE SHALL BE FAIL TO STAY FAIL LAST TYPE.
3. MINIMUM DISTANCE SHOULD BE EITHER 1.5D OR 1 METER, WHICHEVER IS HIGHER.
4. VENT SHALL BE LOCATED AT SAFE DISTANCE (MIN. HEIGHT OF 3.0M ABOVE THE HEIGHT WORKING PLATFORM FALLING WITHIN 15.0M RADIUS VENT) AS PER PNGRB GUIDELINES.
5. LOW POINT DRAIN SHALL BE PROVIDED ON DEPRESSURIZATION LINE AT MINIMUM DISTANCE FROM RISER PIPE OF VENT. ADEQUATE SLOPE TO BE MAINTAINED IN HORIZONTAL SECTION OF THE PIPE FOR LOW POINT DRAIN CONNECTION.
6. VENT SHALL BE WITH QOEC.
7. DEPRESSURIZATION VALVE SHALL BE LOCATED IN SUCH A WAY THAT PIT 4301/4302 & TIT-4301 ON TRANSMITTER CAN BE READ DURING VENTING.
8. THERMO PAD SHALL BE WELDED TYPE .
9. JUMPER SHALL BE PROVIDED ACROSS ALL FLANGES.
10. LOCAL / REMOTE
    - COMMAND ACCEPTED FROM SCADA / PANEL IN LOCAL / MAIN CONTROL ROOM.
    - COMMAND ACCEPTED FROM FIELD ONLY.
11. THIS INTERLOCK IS PROVIDED TO INHIBIT THE OPENING OF VALVE FROM REMOTE AS WELL AS LOCAL IN CASE OF HIGH DIFFERENTIAL PRESSURE (> 3.0 kg/ cm²) ACROSS THE VALVE.
12. BURIED VALVE WITH STEM EXTENSION.

REV.	DATE	DESCRIPTION	PREP.	CHKD.	APPD.
C3	24.06.22	ISSUED FOR HAZOP	HS	AD	AKP
C2	23.05.22	ISSUED FOR APPROVAL	HS	AD	SKP
C1	10.05.22	ISSUED FOR CLIENT REVIEW	HS	AD	SKP
B1	04.05.22	ISSUED FOR IDC	HS	AD	SKP

CLIENT: INDRADHANUSH GAS GRID LIMITED

PMC: VCS QUALITY SERVICES PVT. LTD.

PROJECT: NORTH EAST GAS GRID PHASE-III OF IGGL

TITLE: P&ID FOR SV/DIPL/08 STATION AT DIMAPUR - KOHIMA - IMPHAL PIPELINE

SCALE: N.T.S	TOTAL NO. OF SHTS: 1 OF 1		
SIZE	JOB NO.	DRAWING NUMBER	REV.
A1	C221052	C221052-DIPL-PC-PID-1010	C3

FILE NAME : C221052-DIPL-PC-PID-1011

SV STATION	
TAG NO	SV/DIPL/09
SERVICE FLUID	NATURAL GAS
DESIGN PRESSURE	92 kg/cm²g
DESIGN TEMPERATURE	-29 °C TO 65 °C
OPERATING PRESSURE	37 kg/cm²g
OPERATING TEMPERATURE	0°C TO 55°C C3

UNIT NO. 44

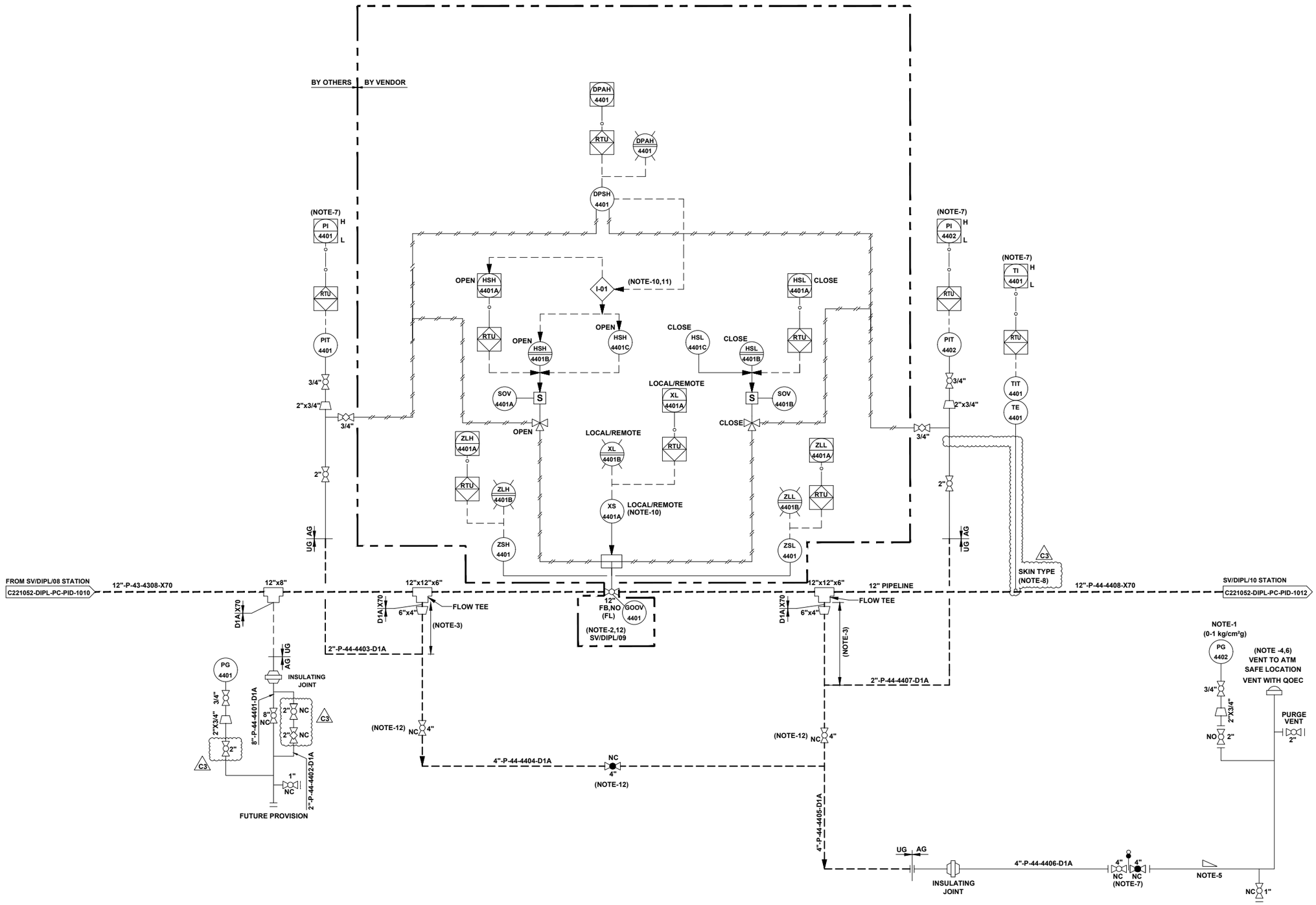

REFERENCE DRAWINGS	
DRAWING TITLE	DRAWING NUMBER
P&ID LEGENDS	C221052-00-PC-LGD-1001 TO 1005

GENERAL NOTES:-

1. ALL LINE NUMBERING AND EQUIPMENT TAG NUMBERING SHALL BE PRE-FIXED WITH PROJECT CODE & AREA CODE "C221052-DIPL".
2. ALL INSTRUMENT TAG NUMBER SHALL BE PRE-FIXED WITH PROJECT CODE & AREA CODE "C221052-DIPL" .
3. ALL BALL VALVE IN PIPELINE EXCEPT IN MAIN LINE (PIGGABLE) SHALL BE REDUCED BORE TYPE

NOTES :-

1. LOW RANGE PRESSURE GAUGE (0-1 kg/cm²g) SHALL BE PROVIDED WITH GAUGE SAVER.
2. VALVE SHALL BE FAIL TO STAY FAIL LAST TYPE.
3. MINIMUM DISTANCE SHOULD BE EITHER 1.5D OR 1 METER, WHICHEVER IS HIGHER.
4. VENT SHALL BE LOCATED AT SAFE DISTANCE (MIN. HEIGHT OF 3.0M ABOVE THE HEIGHT WORKING PLATFORM FALLING WITHIN 15.0M RADIUS VENT) AS PER PNGRB GUIDELINES.
5. LOW POINT DRAIN SHALL BE PROVIDED ON DEPRESSURIZATION LINE AT MINIMUM DISTANCE FROM RISER PIPE OF VENT. ADEQUATE SLOPE TO BE MAINTAINED IN HORIZONTAL SECTION OF THE PIPE FOR LOW POINT DRAIN CONNECTION.
6. VENT SHALL BE WITH QOEC.
7. DEPRESSURIZATION VALVE SHALL BE LOCATED IN SUCH A WAY THAT PIT 4401/4402 & TIT-4401 ON TRANSMITTER CAN BE READ DURING VENTING.
8. THERMO PAD SHALL BE WELDED TYPE.
9. JUMPER SHALL BE PROVIDED ACROSS ALL FLANGES.
10. LOCAL / REMOTE
    - COMMAND ACCEPTED FROM SCADA / PANEL IN LOCAL / MAIN CONTROL ROOM.
    - COMMAND ACCEPTED FROM FIELD ONLY.
11. THIS INTERLOCK IS PROVIDED TO INHIBIT THE OPENING OF VALVE FROM REMOTE AS WELL AS LOCAL IN CASE OF HIGH DIFFERENTIAL PRESSURE (> 3.0 kg/ cm²) ACROSS THE VALVE.
12. BURIED VALVE WITH STEM EXTENSION.

REV.	DATE	DESCRIPTION	PREP.	CHKD.	APPD.
C3	24.06.22	ISSUED FOR HAZOP	HS	AD	AKP
C2	23.05.22	ISSUED FOR APPROVAL	HS	AD	SKP
C1	10.05.22	ISSUED FOR CLIENT REVIEW	HS	AD	SKP
B1	04.05.22	ISSUED FOR IDC	HS	AD	SKP

CLIENT: INDRADHANUSH GAS GRID LIMITED

PMC: VCS QUALITY SERVICES PVT. LTD.

PROJECT: NORTH EAST GAS GRID PHASE-III OF IGGL

TITLE: P&ID FOR SV/DIPL/09 STATION AT DIMAPUR - KOHIMA - IMPHAL PIPELINE

SCALE:	N.T.S	TOTAL NO. OF SHTS:	1 OF 1
SIZE	JOB NO.	DRAWING NUMBER	REV.
A1	C221052	C221052-DIPL-PC-PID-1011	C3

FILE NAME : C221052-DIPL-PC-PID-1012

SV STATION	
TAG NO	SV/DIPL/10
SERVICE FLUID	NATURAL GAS
DESIGN PRESSURE	92 kg/cm²g
DESIGN TEMPERATURE	-29 °C TO 65 °C
OPERATING PRESSURE	37 kg/cm²g
OPERATING TEMPERATURE	0°C TO 55°C C3

UNIT NO. 45

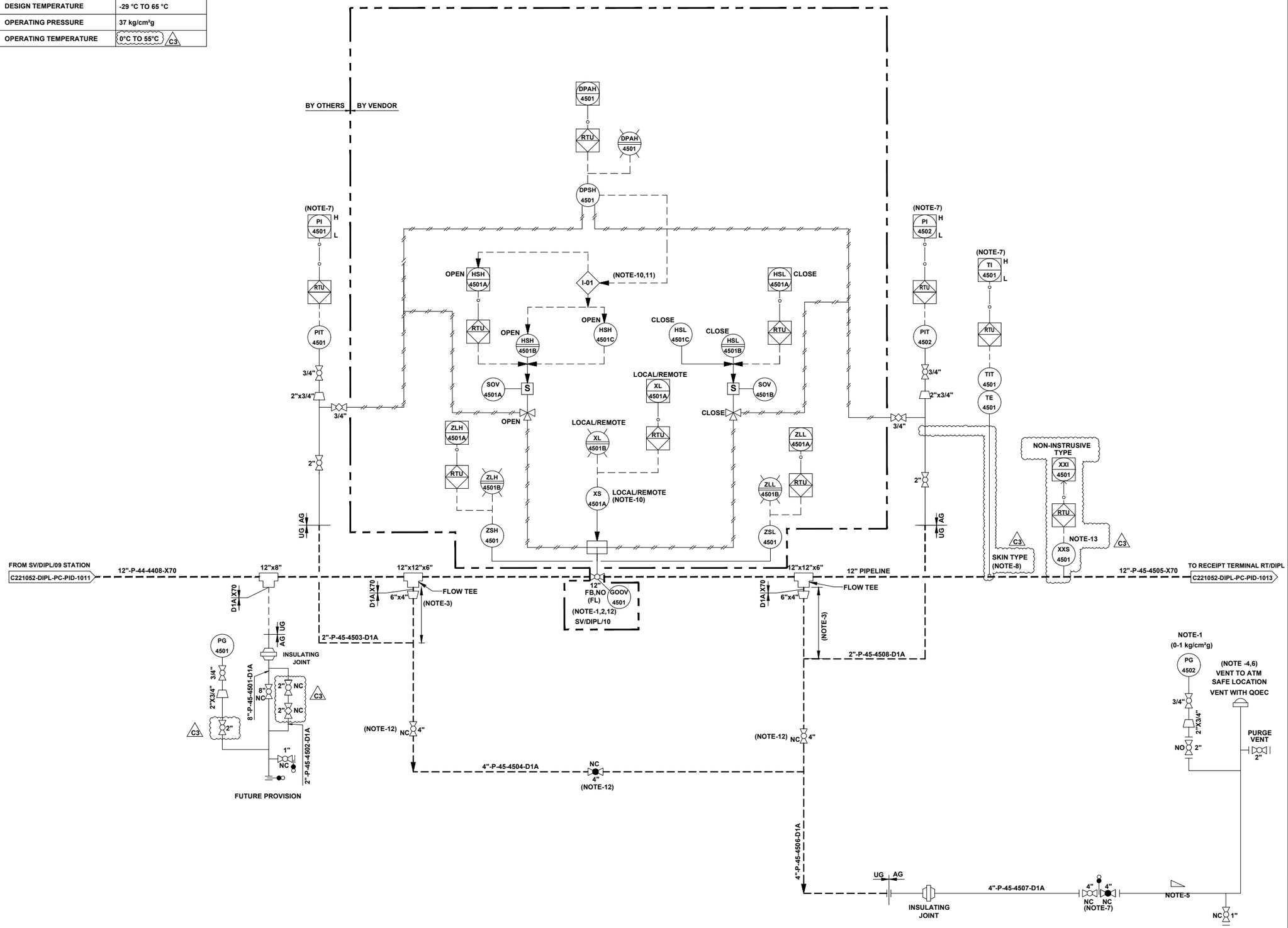

REFERENCE DRAWINGS	
DRAWING TITLE	DRAWING NUMBER
P&ID LEGENDS	C221052-00-PC-LGD-1001 TO 1005

GENERAL NOTES:-

1. ALL LINE NUMBERING AND EQUIPMENT TAG NUMBERING SHALL BE PRE-FIXED WITH PROJECT CODE & AREA CODE "C221052-DIPL".
2. ALL INSTRUMENT TAG NUMBER SHALL BE PRE-FIXED WITH PROJECT CODE & AREA CODE "C221052-DIPL" .
3. ALL BALL VALVE IN PIPELINE EXCEPT IN MAIN LINE (PIGGABLE) SHALL BE REDUCED BORE TYPE

NOTES :-

1. LOW RANGE PRESSURE GAUGE (0-1 kg/cm²g) SHALL BE PROVIDED WITH GAUGE SAVER.
2. VALVE SHALL BE FAIL TO STAY FAIL LAST TYPE.
3. MINIMUM DISTANCE SHOULD BE EITHER 1.5D OR 1 METER, WHICHEVER IS HIGHER.
4. VENT SHALL BE LOCATED AT SAFE DISTANCE (MIN. HEIGHT OF 3.0M ABOVE THE HEIGHT WORKING PLATFORM FALLING WITHIN 15.0M RADIUS VENT) AS PER PNGRB GUIDELINES.
5. LOW POINT DRAIN SHALL BE PROVIDED ON DEPRESSURIZATION LINE AT MINIMUM DISTANCE FROM RISER PIPE OF VENT. ADEQUATE SLOPE TO BE MAINTAINED IN HORIZONTAL SECTION OF THE PIPE FOR LOW POINT DRAIN CONNECTION.
6. VENT SHALL BE WITH QOEC.
7. DEPRESSURIZATION VALVE SHALL BE LOCATED IN SUCH A WAY THAT PIT 4501/4502 & TIT-4501 ON TRANSMITTER CAN BE READ DURING VENTING.
8. THERMO PAD SHALL BE WELDED TYPE.
9. JUMPER SHALL BE PROVIDED ACROSS ALL FLANGES.
10. LOCAL / REMOTE
    - COMMAND ACCEPTED FROM SCADA / PANEL IN LOCAL / MAIN CONTROL ROOM.
    - COMMAND ACCEPTED FROM FIELD ONLY.
11. THIS INTERLOCK IS PROVIDED TO INHIBIT THE OPENING OF VALVE FROM REMOTE AS WELL AS LOCAL IN CASE OF HIGH DIFFERENTIAL PRESSURE (> 3.0 kg/ cm²) ACROSS THE VALVE.
12. BURIED VALVE WITH STEM EXTENSION.
13. PIG SIGNALER CONNECTION SHALL BE CLAMP ON TYPES. C3

REV.	DATE	DESCRIPTION	PREP.	CHKD.	APPD.
C3	24.06.22	ISSUED FOR HAZOP	HS	AD	AKP
C2	23.05.22	ISSUED FOR APPROVAL	HS	AD	SKP
C1	10.05.22	ISSUED FOR CLIENT REVIEW	HS	AD	SKP
B1	04.05.22	ISSUED FOR IDC	HS	AD	SKP

CLIENT: INDRADHANUSH GAS GRID LIMITED

PMC: VCS QUALITY SERVICES PVT. LTD.

PROJECT: NORTH EAST GAS GRID PHASE-III OF IGGL

TITLE: P&ID FOR SV/DIPL/10 STATION AT DIMAPUR - KOHIMA - IMPHAL PIPELINE

SCALE: N.T.S	TOTAL NO. OF SHTS: 1 OF 1		
SIZE	JOB NO.	DRAWING NUMBER	REV.
A1	C221052	C221052-DIPL-PC-PID-1012	C3

FILE NAME : C221052-DIPL-PC-PID-1013

PIG LAUNCHER	
TAG NO.	RT/DIPL-4601
SERVICE FLUID	NATURAL GAS
SIZE MAJOR / MINOR	18" / 12"
DESIGN PRESSURE	92 kg/ cm²g
DESIGN TEMPERATURE	-29°C TO 65°C
OPERATING PRESSURE	37 kg/cm²g
OPERATING TEMPERATURE	0°C TO 55°C (C3)

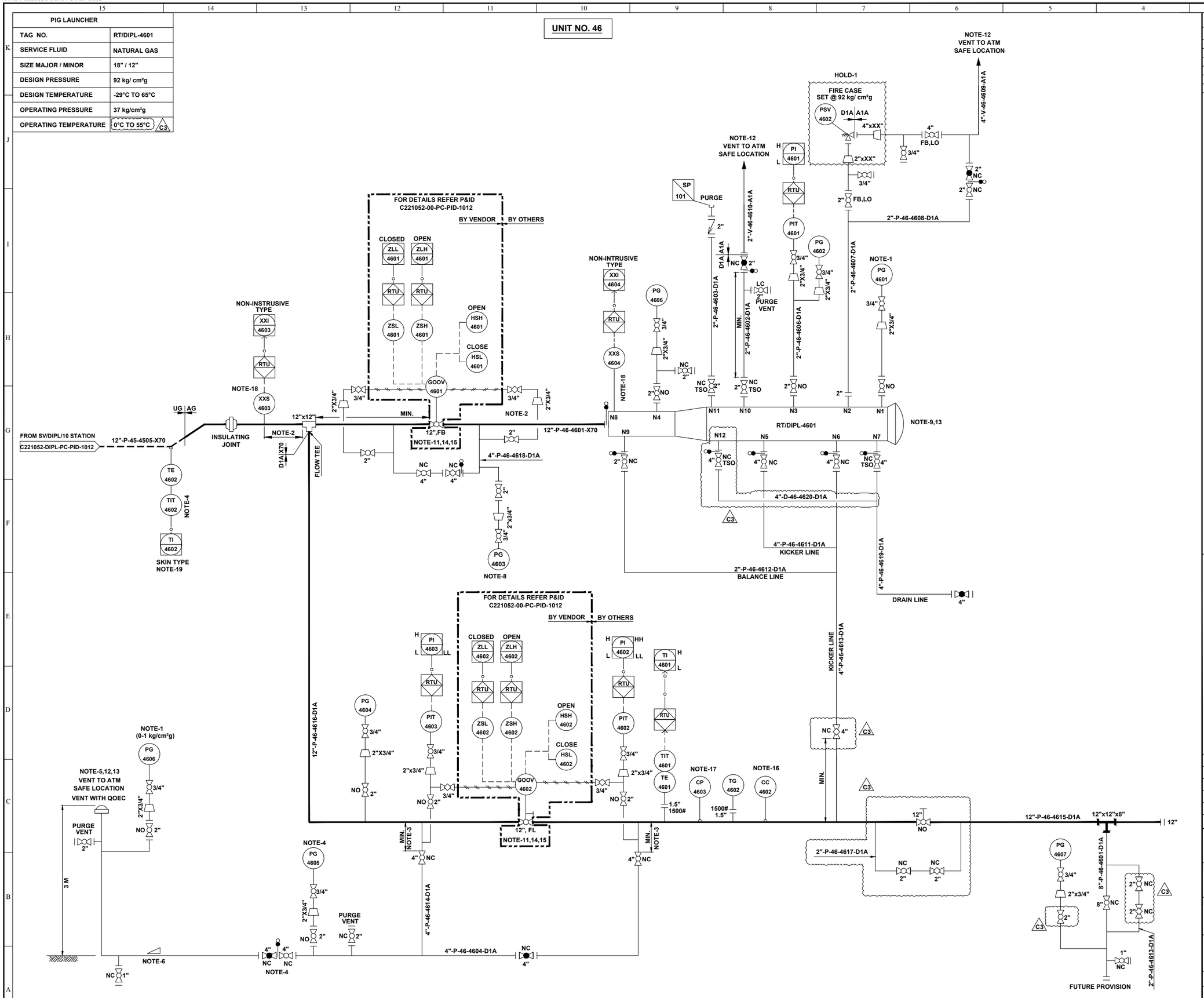

REFERENCE DRAWINGS	
DRAWING TITLE	DRAWING NUMBER
P&ID LEGENDS	C221052-00-PC-LGD-1001 TO 1005

GENERAL NOTES:-

1. ALL LINE NUMBERING AND EQUIPMENT TAG NUMBERING SHALL BE PRE-FIXED WITH PROJECT CODE & AREA CODE "C221052-DIPL".
2. ALL INSTRUMENT TAG NUMBER SHALL BE PRE-FIXED WITH PROJECT CODE & AREA CODE "C221052-DIPL" .
3. ALL BALL VALVE IN PIPELINE EXCEPT IN MAIN LINE (PIGGABLE) SHALL BE REDUCED BORE TYPE

NOTES :-

1. LOW RANGE PRESSURE GAUGE (0-1 kg/cm²g) SHALL BE PROVIDED WITH GAUGE SAVER.
2. DISTANCE SHALL BE AT LEAST EQUAL TO THE LENGTH OF THE LONGEST INTELLIGENT PIG.
3. BRANCH VALVE SHALL BE LOCATED AT MINIMUM DISTANCE.
4. DEPRESSURIZATION VALVE SHALL BE LOCATED IN SUCH A WAY THAT PG-3405 AND TIT-4602 CAN BE READ DURING VENTING.
5. VENT SHALL BE WITH QOEC.
6. ADEQUATE SLOPE TO BE MAINTAINED IN HORIZONTAL SECTION OF PIPE IF ANY FOR LOW POINT DRAIN CONNECTION.
7. JUMPERS SHALL BE PROVIDED ACROSS ALL FLANGES.
8. PG-4603 SHALL HAVE A RANGE OF (0-5 kg/cm²g) SHALL BE PROVIDED WITH GAUGE SAVER AND LEAST COUNT OF 0.1 kg/cm²g.
9. PROVISION OF A TROLLEY WITH PUSH ROD & PULLING LINE SHALL BE CONSIDERED TO ASSIST LOADING OR REMOVAL OF PIGS FROM THE SCRAPPER TRAP.
10. GAS DETECTORS TO BE PROVIDED IN DOWN WIND DIRECTION NEAR PIG BARRELS TO MONITOR LEAKAGE FROM FAILURE PRONE EQUIPMENTS PARTS,ACCESSORIES,VALVE & PIPES.
11. VALVE POSITION SHALL BE FAIL LAST.
12. ALL VENTS SHALL BE PROVIDED MIN. 3M HIGH FROM NEAREST HIGHEST OPERATING PLATFORM OR NEARBY STRUCTURE WITHIN 15M WHICHEVER IS HIGHER. NON SPARKING MATERIAL (BRASS) SHALL BE USED FOR FLAPPER TYPE VENT CONNECTION.
13. QUICK OPENING END CLOSURE TYPE DOOR CANNOT BE OPENED UNLESS PIG BARREL AND CONNECTED PIPING IS FULLY DEPRESSURIZE.
14. NECESSARY I/O's & SIGNAL FOR INTERFACE WITH SCADA SHALL BE DEVELOPED SEPARATELY.
15. ACTUATOR DETAILS OF GOOV CONTROL LOGIC SHALL BE AS PER P&ID.
16. 'CC' SHALL BE OF WEIGHT LOSS TYPE.
17. ONLINE RETRIEVAL TYPE CORROSION MONITORING COUPON AND CORROSION PROBE SHALL BE PROVIDED FURTHER WHEREVER SCADA SYSTEM ARE AVAILABLE, THIS SYSTEM SHALL BE ONLINE SCADA COMPATIBLE OTHERWISE DATA SHALL BE COLLECTED BY OFFLINE DATA LOGGER.
18. PIG SIGNALER CONNECTION SHALL BE CLAMP ON TYPES..
19. THERMO PAD SHALL BE WELDED TYPE.

HOLDS:-

1. PSVs INLET & OUTLET SIZE ARE UNDER HOLD. SHALL BE FINALISED POST RECEIPT OF VENDOR DATA.

VCS QUALITY SERVICES PVT. LTD. XVI

REV.	DATE	DESCRIPTION	PREP.	CHKD.	APPD.
C3	24.06.22	ISSUED FOR HAZOP	HS	AD	AKP
C2	23.05.22	ISSUED FOR APPROVAL	HS	AD	SKP
C1	13.05.22	ISSUED FOR CLIENT REVIEW	HS	AD	SKP
B1	30.04.22	ISSUED FOR IDC	HS	AD	SKP

CLIENT: INDRADHANUSH GAS GRID LIMITED

PMC: VCS QUALITY SERVICES PVT. LTD.

PROJECT: NORTH EAST GAS GRID PHASE-III OF IGGL

TITLE: P&ID FOR RECEIPT TERMINAL RT/DIPL AT IMPHAL

SCALE:	N. T .S	TOTAL NO. OF SHTS:	1 OF 1
SIZE	JOB NO.	DRAWING NUMBER	REV.
A1	C221052	C221052-DIPL-PC-PID-1013	C3

FILE NAME : C221052-SGPL-PC-PID-1001

PIG LAUNCHER	
TAG NO.	DT/SGPL-1001
SERVICE FLUID	NATURAL GAS
SIZE MAJOR / MINOR	18" / 12"
DESIGN PRESSURE	92 kg/cm²g
DESIGN TEMPERATURE	-29°C TO 65°C
OPERATING PRESSURE	30 kg/cm²g
OPERATING TEMPERATURE	0°C TO 55°C C3

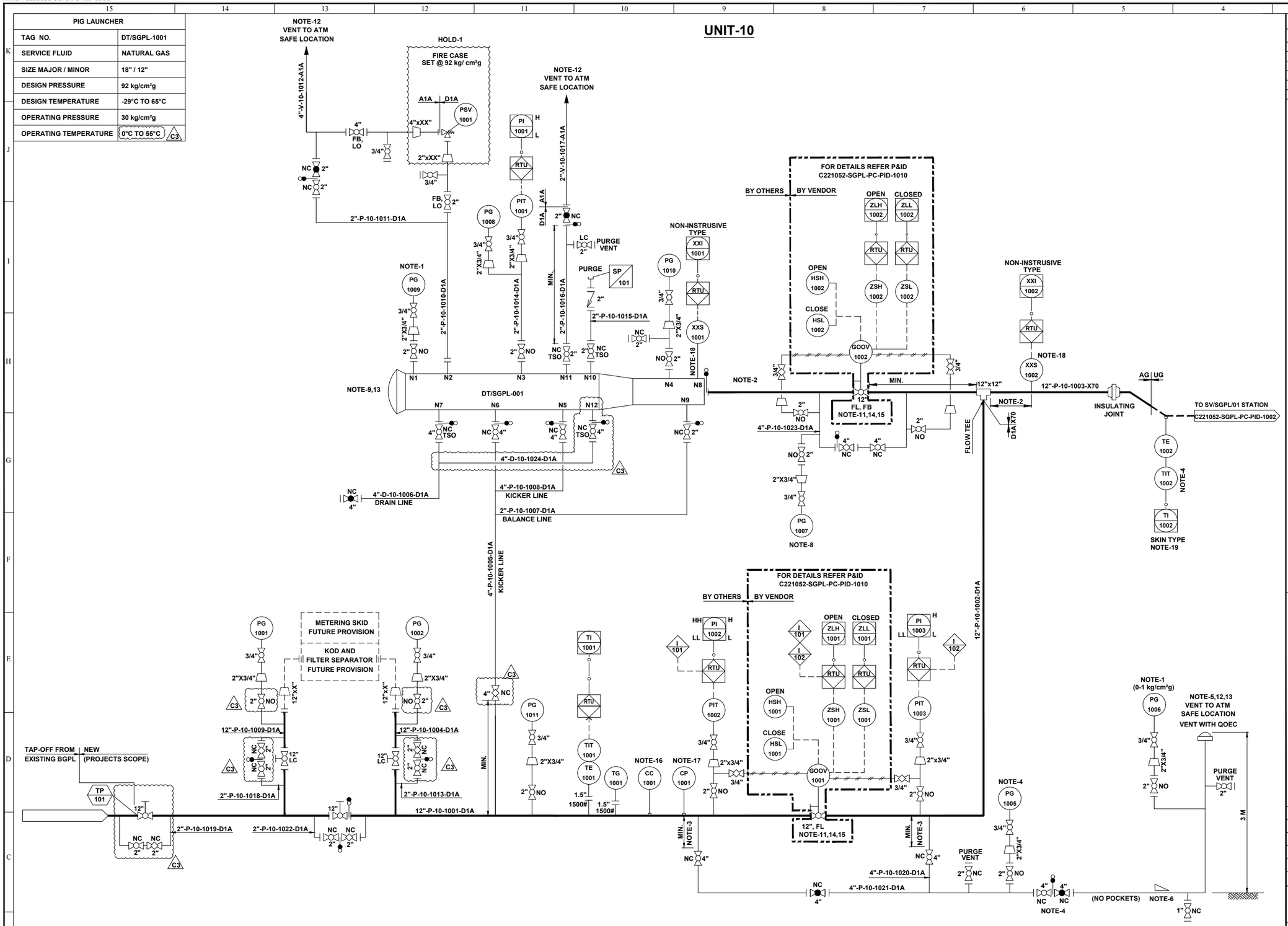

REFERENCE DRAWINGS	
DRAWING TITLE	DRAWING NUMBER
P&ID LEGENDS	C221052-00-PC-LGD-1000

GENERAL NOTES:-

1. ALL LINE NUMBERING AND EQUIPMENT TAG NUMBERING SHALL BE PRE-FIXED WITH PROJECT CODE & AREA CODE "C221052-SGPL".
2. ALL INSTRUMENT TAG NUMBER SHALL BE PRE-FIXED WITH PROJECT CODE & AREA CODE "C221052-SGPL" .
3. ALL BALL VALVE IN PIPELINE EXCEPT IN MAIN LINE (PIGGABLE) SHALL BE REDUCED BORE TYPE.

NOTES :-

1. LOW RANGE PRESSURE GAUGE (0-1 kg/cm²g) SHALL BE PROVIDED WITH GAUGE SAVER.
2. DISTANCE SHALL BE AT LEAST EQUAL TO THE LENGTH OF THE LONGEST INTELLIGENT PIG.
3. BRANCH VALVE SHALL BE LOCATED AT MINIMUM DISTANCE.
4. DEPRESSURIZATION VALVE SHALL BE LOCATED IN SUCH A WAY THAT PG-1005 AND TIT-1002 CAN BE READ DURING VENTING.
5. VENT SHALL BE WITH QOEC.
6. ADEQUATE SLOPE TO BE MAINTAINED IN HORIZONTAL SECTION OF PIPE IF ANY FOR LOW POINT DRAIN CONNECTION.
7. JUMPERS SHALL BE PROVIDED ACROSS ALL FLANGES.
8. PG-1007 SHALL HAVE A RANGE OF (0-5 kg/cm²g) SHALL BE PROVIDED WITH GAUGE SAVER AND LEAST COUNT OF 0.1 kg/cm²g. .
9. PROVISION OF A TROLLEY WITH PUSH ROD & PULLING LINE SHALL BE CONSIDERED TO ASSIST LOADING OR REMOVAL OF PIGS FROM THE SCRAPPER TRAP.
10. GAS DETECTORS TO BE PROVIDED IN DOWN WIND DIRECTION NEAR PIG BARRELS TO MONITOR LEAKAGE FROM FAILURE PRONE EQUIPMENTS PARTS,ACCESSORIES,VALVE & PIPES.
11. VALVE POSITION SHALL BE FAIL LAST.
12. ALL VENTS SHALL BE PROVIDED MIN. 3M HIGH FROM NEAREST HIGHEST OPERATING PLATFORM OR NEARBY STRUCTURE WITHIN 15M WHICHEVER IS HIGHER. NON SPARKING MATERIAL (BRASS) SHALL BE USED FOR FLAPPER TYPE VENT CONNECTION.
13. QUICK OPENING END CLOSURE TYPE DOOR CANNOT BE OPENED UNLESS PIG BARREL AND CONNECTED PIPING IS FULLY DEPRESSURIZE.
14. NECESSARY IIO's & SIGNAL FOR INTERFACE WITH SCADA SHALL BE DEVELOPED SEPARATELY.
15. ACTUATOR DETAILS OF GOOV CONTROL LOGIC SHALL BE AS PER P&ID.
16. 'CC' SHALL BE OF WEIGHT LOSS TYPE.
17. ONLINE RETRIEVAL TYPE CORROSION MONITORING COUPON AND CORROSION PROBE SHALL BE PROVIDED FURTHER WHEREVER SCADA SYSTEM ARE AVAILABLE, THIS SYSTEM SHALL BE ONLINE SCADA COMPATIBLE OTHERWISE DATA SHALL BE COLLECTED BY OFFLINE DATA LOGGER.
18. PIG SIGNALER CONNECTION SHALL BE CLAMP ON TYPES.
19. THERMOPAD SHALL BE WELDED TYPE.

HOLDS:-

1. PSVs INLET & OUTLET SIZE ARE UNDER HOLD. SHALL BE FINALISED POST RECEIPT OF VENDOR DATA.

INTER LOCK:-

I 101 — VALVE GOOV-1001 SHALL CLOSE ON LOW LOW PRESSURE OF THE PIPELINE AT STATION INLET.

I 102 — VALVE GOOV-1001 SHALL CLOSE ON LOW LOW PRESSURE OF THE PIPELINE AT STATION OUTLET.

REV.	DATE	DESCRIPTION	PREP.	CHKD.	APPD.
C3	24.06.22	ISSUED FOR HAZOP	HS	AD	SKP
C2	23.05.22	ISSUED FOR APPROVAL	HS	AD	SKP
C1	16.05.22	ISSUED FOR CLIENT REVIEW	AK	AD	SKP
B1	30.04.22	ISSUED FOR IDC	AK	AD	SKP

CLIENT: INDRADHANUSH GAS GRID LIMITED

PMC: VCS QUALITY SERVICES PVT. LTD.

PROJECT: NORTH EAST GAS GRID PHASE-III OF IGGL

TITLE: P&ID FOR DISPATCH TERMINAL DT/SGPL AT SILIGURI

SCALE: N. T .S	TOTAL NO. OF SHTS: 1 OF 1		
SIZE	JOB NO.	DRAWING NUMBER	REV.
A1	C221052	C221052-SGPL-PC-PID-1001	C3

FILE NAME : C221052-SGPL-PC-PID-1002

SV STATION	
TAG NO	SV/SGPL/01
SERVICE FLUID	NATURAL GAS
DESIGN PRESSURE	92 kg/cm²g
DESIGN TEMPERATURE	-29 °C TO 65 °C
OPERATING PRESSURE	30 kg/cm²g
OPERATING TEMPERATURE	0°C TO 55°C C3

UNIT-11

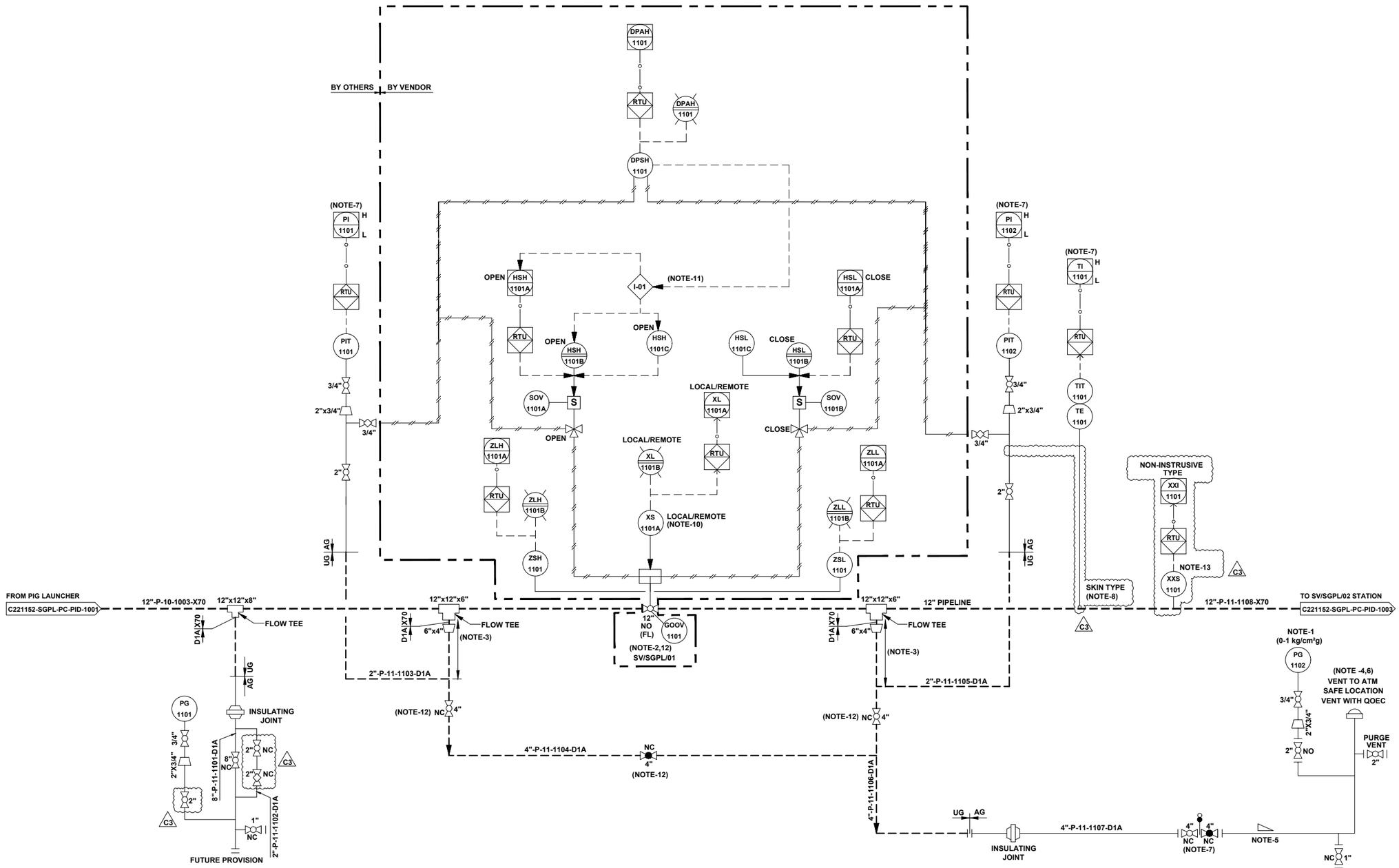

REFERENCE DRAWINGS

DRAWING TITLE	DRAWING NUMBER
P&ID LEGENDS	C221052-00-PC-LGD-1000

GENERAL NOTES:-

1. ALL LINE NUMBERING AND EQUIPMENT TAG NUMBERING SHALL BE PRE-FIXED WITH PROJECT CODE & AREA CODE "C221152-SGPL".
2. ALL INSTRUMENT TAG NUMBER SHALL BE PRE-FIXED WITH PROJECT CODE & AREA CODE "C221152-SGPL" .
3. ALL BALL VALVE IN PIPELINE EXCEPT IN MAIN LINE (PIGGABLE) SHALL BE REDUCED BORE TYPE.

NOTES :-

1. LOW RANGE PRESSURE GAUGE (0-1 kg/cm2g) SHALL BE PROVIDED WITH GAUGE SAVER.
2. VALVE SHALL BE FAIL LAST TYPE.
3. MINIMUM DISTANCE SHOULD BE EITHER 1.5D OR 1 METER, WHICHEVER IS HIGHER.
4. VENT SHALL BE LOCATED AT SAFE DISTANCE (MIN. HEIGHT OF 3.0M ABOVE THE HEIGHT WORKING PLATFORM FALLING WITHIN 15.0M RADIUS VENT) AS PER PNGRB GUIDELINES.
5. LOW POINT DRAIN SHALL BE PROVIDED ON DEPRESSURIZATION LINE AT MINIMUM DISTANCE FROM RISER PIPE OF VENT. ADEQUATE SLOPE TO BE MAINTAINED IN HORIZONTAL SECTION OF THE PIPE FOR LOW POINT DRAIN CONNECTION.
6. VENT SHALL BE WITH QOEC.
7. DEPRESSURIZATION VALVE SHALL BE LOCATED IN SUCH A WAY THAT PIT 1101/1102 & TIT-1101 ON TRANSMITTER CAN BE READ DURING VENTING.
8. THERMOPAD SHALL BE WELDED TYPE.
9. JUMPER SHALL BE PROVIDED ACROSS ALL FLANGES.
10. LOCAL / REMOTE
    - COMMAND ACCEPTED FROM SCADA / PANEL IN LOCAL / MAIN CONTROL ROOM.
    - COMMAND ACCEPTED FROM FIELD ONLY.
11. THIS INTERLOCK IS PROVIDED TO INHIBIT THE OPENING OF VALVE FROM REMOTE AS WELL AS LOCAL IN CASE OF HIGH DIFFERENTIAL PRESSURE (> 3.0 kg/ cm²) ACROSS THE VALVE.
12. BURIED VALVE WITH STEM EXTENSION.
13. PIG SIGNALER CONNECTION SHALL BE CLAMP ON TYPES. C3

REV.	DATE	DESCRIPTION	PREP.	CHKD.	APPD.
C3	24.06.22	ISSUED FOR HAZOP	HS	AD	SKP
C2	23.05.22	ISSUED FOR APPROVAL	HS	AD	SKP
C1	16.05.22	ISSUED FOR CLIENT REVIEW	AK	AD	SKP
B1	04.05.22	ISSUED FOR IDC	AK	AD	SKP

CLIENT: INDRADHANUSH GAS GRID LIMITED

PMC: VCS QUALITY SERVICES PVT. LTD.

PROJECT: NORTH EAST GAS GRID PHASE-III OF IGGL

TITLE: P&ID FOR SV/SGPL/01 STATION AT SILIGURI - GANGTOK PIPELINE

SCALE:	N.T.S	TOTAL NO. OF SHTS:	1 OF 1
SIZE	JOB NO.	DRAWING NUMBER	REV.
A1	C221052	C221052-SGPL-PC-PID-1002	C3

FILE NAME : C221052-SGPL-PC-PID-1003

SV STATION	
TAG NO	SV/SGPL/02
SERVICE FLUID	NATURAL GAS
DESIGN PRESSURE	92 kg/cm²g
DESIGN TEMPERATURE	-29 °C TO 65 °C
OPERATING PRESSURE	30 kg/cm²g
OPERATING TEMPERATURE	0°C TO 55°C C3

UNIT-12

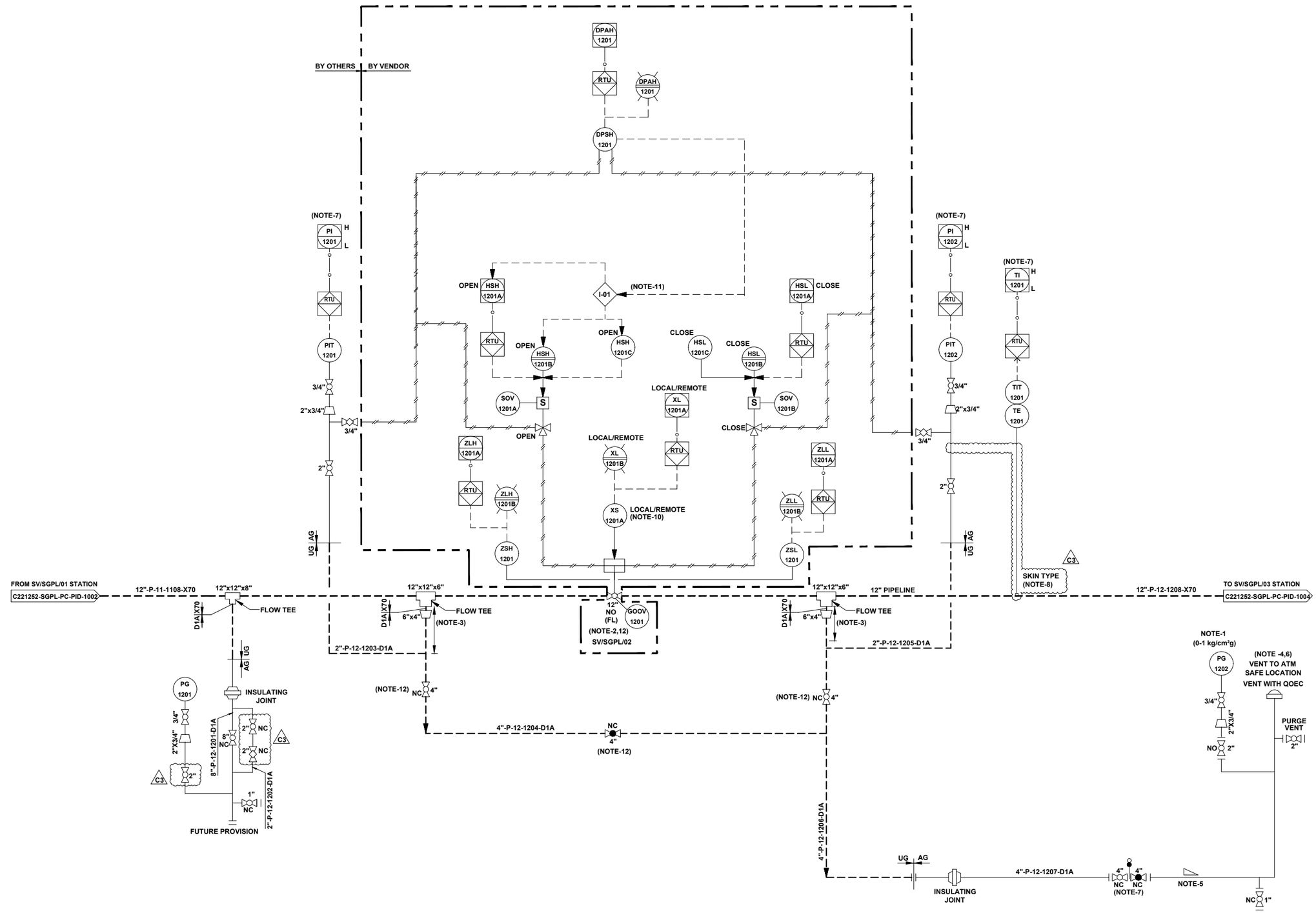

REFERENCE DRAWINGS	
DRAWING TITLE	DRAWING NUMBER
P&ID LEGENDS	C221052-00-PC-LGD-1000

GENERAL NOTES:-

1. ALL LINE NUMBERING AND EQUIPMENT TAG NUMBERING SHALL BE PRE-FIXED WITH PROJECT CODE & AREA CODE "C221152-SGPL".
2. ALL INSTRUMENT TAG NUMBER SHALL BE PRE-FIXED WITH PROJECT CODE & AREA CODE "C221152-SGPL" .
3. ALL BALL VALVE IN PIPELINE EXCEPT IN MAIN LINE (PIGGABLE) SHALL BE REDUCED BORE TYPE.

NOTES :-

1. LOW RANGE PRESSURE GAUGE (0-1 kg/cm2g) SHALL BE PROVIDED WITH GAUGE SAVER.
2. VALVE SHALL BE FAIL LAST TYPE.
3. MINIMUM DISTANCE SHOULD BE EITHER 1.5D OR 1 METER, WHICHEVER IS HIGHER.
4. VENT SHALL BE LOCATED AT SAFE DISTANCE (MIN. HEIGHT OF 3.0M ABOVE THE HEIGHT WORKING PLATFORM FALLING WITHIN 15.0M RADIUS VENT) AS PER PNGRB GUIDELINES.
5. LOW POINT DRAIN SHALL BE PROVIDED ON DEPRESSURIZATION LINE AT MINIMUM DISTANCE FROM RISER PIPE OF VENT. ADEQUATE SLOPE TO BE MAINTAINED IN HORIZONTAL SECTION OF THE PIPE FOR LOW POINT DRAIN CONNECTION.
6. VENT SHALL BE WITH QOEC.
7. DEPRESSURIZATION VALVE SHALL BE LOCATED IN SUCH A WAY THAT PIT 1201/1202 & TIT-1201 ON TRANSMITTER CAN BE READ DURING VENTING.
8. THERMOPAD SHALL BE WELDED TYPE .
9. JUMPER SHALL BE PROVIDED ACROSS ALL FLANGES.
10. LOCAL / REMOTE
    - COMMAND ACCEPTED FROM SCADA / PANEL IN LOCAL / MAIN CONTROL ROOM.
    - COMMAND ACCEPTED FROM FIELD ONLY.
11. THIS INTERLOCK IS PROVIDED TO INHIBIT THE OPENING OF VALVE FROM REMOTE AS WELL AS LOCAL IN CASE OF HIGH DIFFERENTIAL PRESSURE (> 3.0 kg/ cm²) ACROSS THE VALVE.
12. BURIED VALVE WITH STEM EXTENSION.

VCS QUALITY SERVICES PVT. LTD. XVI

REV.	DATE	DESCRIPTION	PREP.	CHKD.	APPD.
C3	24.06.22	ISSUED FOR HAZOP	HS	AD	SKP
C2	23.05.22	ISSUED FOR APPROVAL	HS	AD	SKP
C1	16.05.22	ISSUED FOR CLIENT REVIEW	AK	AD	SKP
B1	04.05.22	ISSUED FOR IDC	AK	AD	SKP

CLIENT: INDRADHANUSH GAS GRID LIMITED

PMC: VCS QUALITY SERVICES PVT. LTD.

PROJECT: NORTH EAST GAS GRID PHASE-III OF IGGL

TITLE: P&ID FOR SV/SGPL/02 STATION AT SILIGURI - GANGTOK PIPELINE

SCALE:	N.T.S	TOTAL NO. OF SHTS:	1 OF 1
SIZE	JOB NO.	DRAWING NUMBER	REV.
A1	C221052	C221052-SGPL-PC-PID-1003	C3

FILE NAME : C221052-SGPL-PC-PID-1004

SV STATION	
TAG NO	SV/SGPL/03
SERVICE FLUID	NATURAL GAS
DESIGN PRESSURE	92 kg/cm^{2}g
DESIGN TEMPERATURE	-29 °C TO 65 °C
OPERATING PRESSURE	30 kg/cm^{2}g
OPERATING TEMPERATURE	0°C TO 55°C C3

UNIT-13

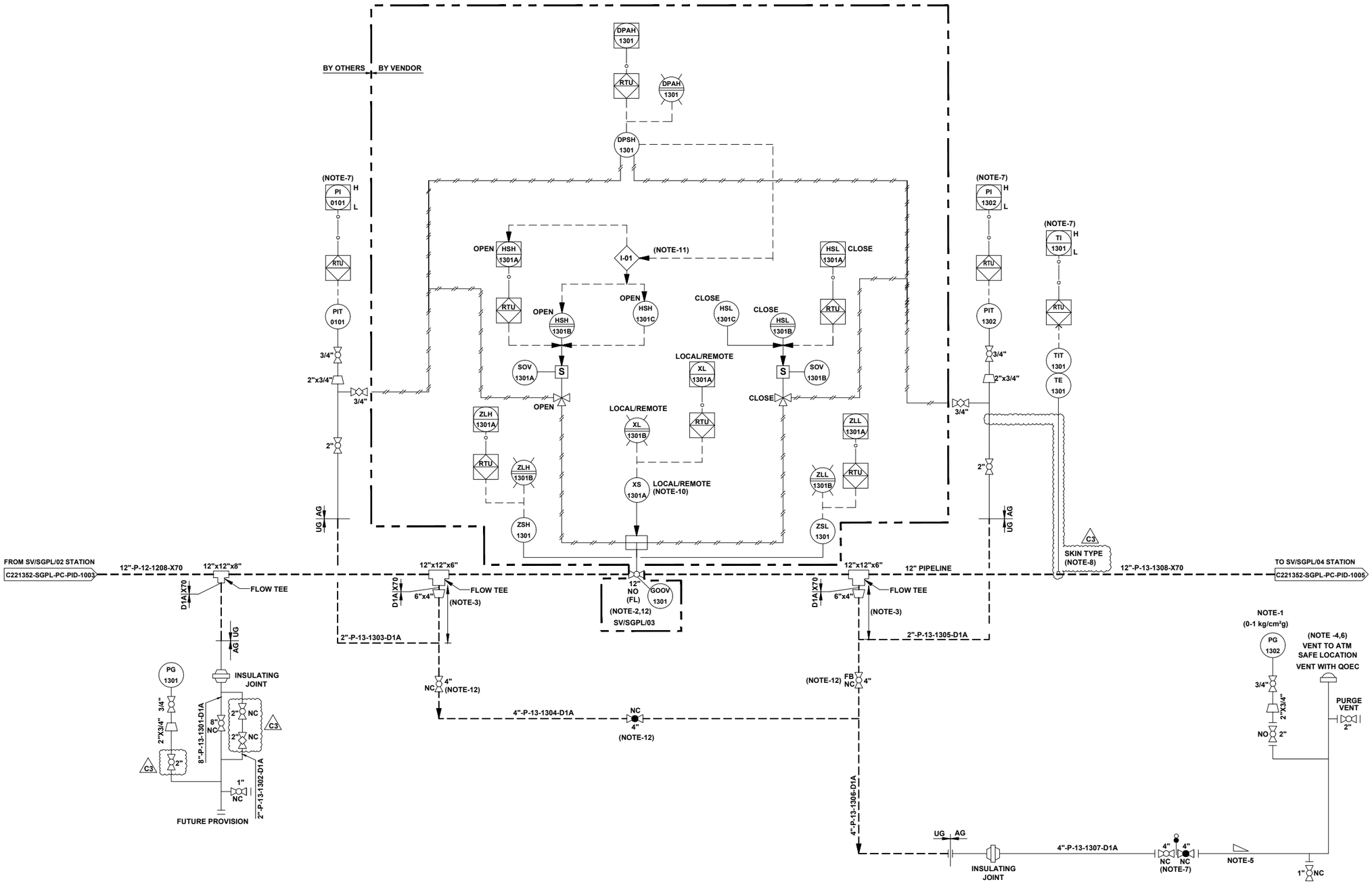

REFERENCE DRAWINGS	
DRAWING TITLE	DRAWING NUMBER
P&ID LEGENDS	

GENERAL NOTES:-

1. ALL LINE NUMBERING AND EQUIPMENT TAG NUMBERING SHALL BE PRE-FIXED WITH PROJECT CODE & AREA CODE "C221352-SGPL".
2. ALL INSTRUMENT TAG NUMBER SHALL BE PRE-FIXED WITH PROJECT CODE & AREA CODE "C221352-SGPL" .
3. ALL BALL VALVE IN PIPELINE EXCEPT IN MAIN LINE (PIGGABLE) SHALL BE REDUCED BORE TYPE.

NOTES :-

1. LOW RANGE PRESSURE GAUGE (0-1 kg/cm2g) SHALL BE PROVIDED WITH GAUGE SAVER.
2. VALVE SHALL BE FAIL LAST TYPE.
3. MINIMUM DISTANCE SHOULD BE EITHER 1.5D OR 1 METER, WHICHEVER IS HIGHER.
4. VENT SHALL BE LOCATED AT SAFE DISTANCE (MIN. HEIGHT OF 3.0M ABOVE THE HEIGHT WORKING PLATFORM FALLING WITHIN 15.0M RADIUS VENT) AS PER PNGRB GUIDELINES.
5. LOW POINT DRAIN SHALL BE PROVIDED ON DEPRESSURIZATION LINE AT MINIMUM DISTANCE FROM RISER PIPE OF VENT. ADEQUATE SLOPE TO BE MAINTAINED IN HORIZONTAL SECTION OF THE PIPE FOR LOW POINT DRAIN CONNECTION.
6. VENT SHALL BE WITH QOEC.
7. DEPRESSURIZATION VALVE SHALL BE LOCATED IN SUCH A WAY THAT PIT 1301/1302 & TIT-1301 ON TRANSMITTER CAN BE READ DURING VENTING.
8. THERMOPAD SHALL BE WELDED TYPE.
9. JUMPER SHALL BE PROVIDED ACROSS ALL FLANGES.
10. LOCAL / REMOTE
    - COMMAND ACCEPTED FROM SCADA / PANEL IN LOCAL / MAIN CONTROL ROOM.
    - COMMAND ACCEPTED FROM FIELD ONLY.
11. THIS INTERLOCK IS PROVIDED TO INHIBIT THE OPENING OF VALVE FROM REMOTE AS WELL AS LOCAL IN CASE OF HIGH DIFFERENTIAL PRESSURE (> 3.0 kg/ cm²) ACROSS THE VALVE.
12. BURIED VALVE WITH STEM EXTENSION.

VCS QUALITY SERVICES PVT. LTD. XVI

REV.	DATE	DESCRIPTION	PREP.	CHKD.	APPD.
C3	24.06.22	ISSUED FOR HAZOP	HS	AD	SKP
C2	23.05.22	ISSUED FOR APPROVAL	HS	AD	SKP
C1	16.05.22	ISSUED FOR CLIENT REVIEW	AK	AD	SKP
B1	04.05.22	ISSUED FOR IDC	AK	AD	SKP

CLIENT: INDRADHANUSH GAS GRID LIMITED

PMC: VCS QUALITY SERVICES PVT. LTD.

PROJECT: NORTH EAST GAS GRID PHASE-III OF IGGL

TITLE: P&ID FOR SV/SGPL/03 STATION AT SILIGURI - GANGTOK PIPELINE

SCALE:	N.T.S	TOTAL NO. OF SHTS:	1 OF 1
SIZE	JOB NO.	DRAWING NUMBER	REV.
A1	C221052	C221052-SGPL-PC-PID-1004	C3

FILE NAME : C221052-SGPL-PC-PID-1005

SV STATION	
TAG NO	SV/SGPL/04
SERVICE FLUID	NATURAL GAS
DESIGN PRESSURE	92 kg/cm²g
DESIGN TEMPERATURE	-29 °C TO 65 °C
OPERATING PRESSURE	30 kg/cm²g
OPERATING TEMPERATURE	0°C TO 55°C (C3)

UNIT-14

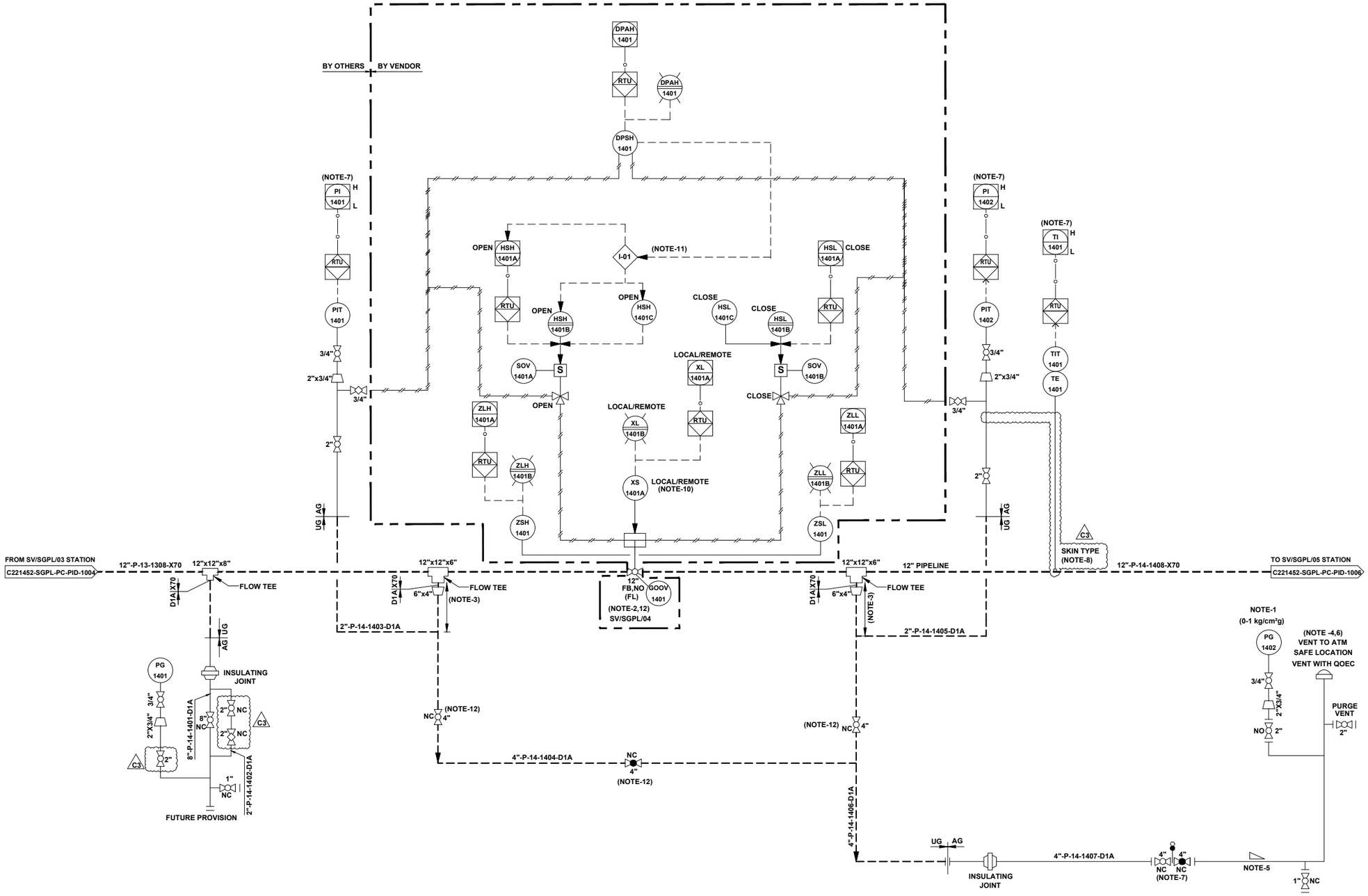

REFERENCE DRAWINGS	
DRAWING TITLE	DRAWING NUMBER
P&ID LEGENDS	

GENERAL NOTES:-

1. ALL LINE NUMBERING AND EQUIPMENT TAG NUMBERING SHALL BE PRE-FIXED WITH PROJECT CODE & AREA CODE "C221352-SGPL".
2. ALL INSTRUMENT TAG NUMBER SHALL BE PRE-FIXED WITH PROJECT CODE & AREA CODE "C221352-SGPL" .
3. ALL BALL VALVE IN PIPELINE EXCEPT IN MAIN LINE (PIGGABLE) SHALL BE REDUCED BORE TYPE.

NOTES :-

1. LOW RANGE PRESSURE GAUGE (0-1 kg/cm2g) SHALL BE PROVIDED WITH GAUGE SAVER.
2. VALVE SHALL BE FAIL LAST TYPE.
3. MINIMUM DISTANCE SHOULD BE EITHER 1.5D OR 1 METER, WHICHEVER IS HIGHER.
4. VENT SHALL BE LOCATED AT SAFE DISTANCE (MIN. HEIGHT OF 3.0M ABOVE THE HEIGHT WORKING PLATFORM FALLING WITHIN 15.0M RADIUS VENT) AS PER PNGRB GUIDELINES.
5. LOW POINT DRAIN SHALL BE PROVIDED ON DEPRESSURIZATION LINE AT MINIMUM DISTANCE FROM RISER PIPE OF VENT. ADEQUATE SLOPE TO BE MAINTAINED IN HORIZONTAL SECTION OF THE PIPE FOR LOW POINT DRAIN CONNECTION.
6. VENT SHALL BE WITH QOEC.
7. DEPRESSURIZATION VALVE SHALL BE LOCATED IN SUCH A WAY THAT PIT 1401/1402 & TIT-1401 ON TRANSMITTER CAN BE READ DURING VENTING.
8. THERMOPAD SHALL BE WELDED TYPE.
9. JUMPER SHALL BE PROVIDED ACROSS ALL FLANGES.
10. LOCAL / REMOTE
    - COMMAND ACCEPTED FROM SCADA / PANEL IN LOCAL / MAIN CONTROL ROOM.
    - COMMAND ACCEPTED FROM FIELD ONLY.
11. THIS INTERLOCK IS PROVIDED TO INHIBIT THE OPENING OF VALVE FROM REMOTE AS WELL AS LOCAL IN CASE OF HIGH DIFFERENTIAL PRESSURE (> 3.0 kg/ cm²) ACROSS THE VALVE.
12. BURIED VALVE WITH STEM EXTENSION.

REV.	DATE	DESCRIPTION	PREP.	CHKD.	APPD.
C3	24.06.22	ISSUED FOR HAZOP	HS	AD	SKP
C2	23.05.22	ISSUED FOR APPROVAL	HS	AD	SKP
C1	16.05.22	ISSUED FOR CLIENT REVIEW	AK	AD	SKP
B1	04.05.22	ISSUED FOR IDC	AK	AD	SKP

CLIENT: INDRADHANUSH GAS GRID LIMITED

PMC: VCS QUALITY SERVICES PVT. LTD.

PROJECT: NORTH EAST GAS GRID PHASE-III OF IGGL

TITLE: P&ID FOR SV/SGPL/04 STATION AT SILIGURI - GANGTOK PIPELINE

SCALE:	N.T.S	TOTAL NO. OF SHTS:	1 OF 1
SIZE	JOB NO.	DRAWING NUMBER	REV.
A1	C221052	C221052-SGPL-PC-PID-1005	C3

FILE NAME : C221052-SGPL-PC-PID-1006

SV STATION	
TAG NO	SV/SGPL/05
SERVICE FLUID	NATURAL GAS
DESIGN PRESSURE	92 kg/cm²g
DESIGN TEMPERATURE	-29 °C TO 65 °C
OPERATING PRESSURE	30 kg/cm²g
OPERATING TEMPERATURE	0°C TO 55°C C3

UNIT-15

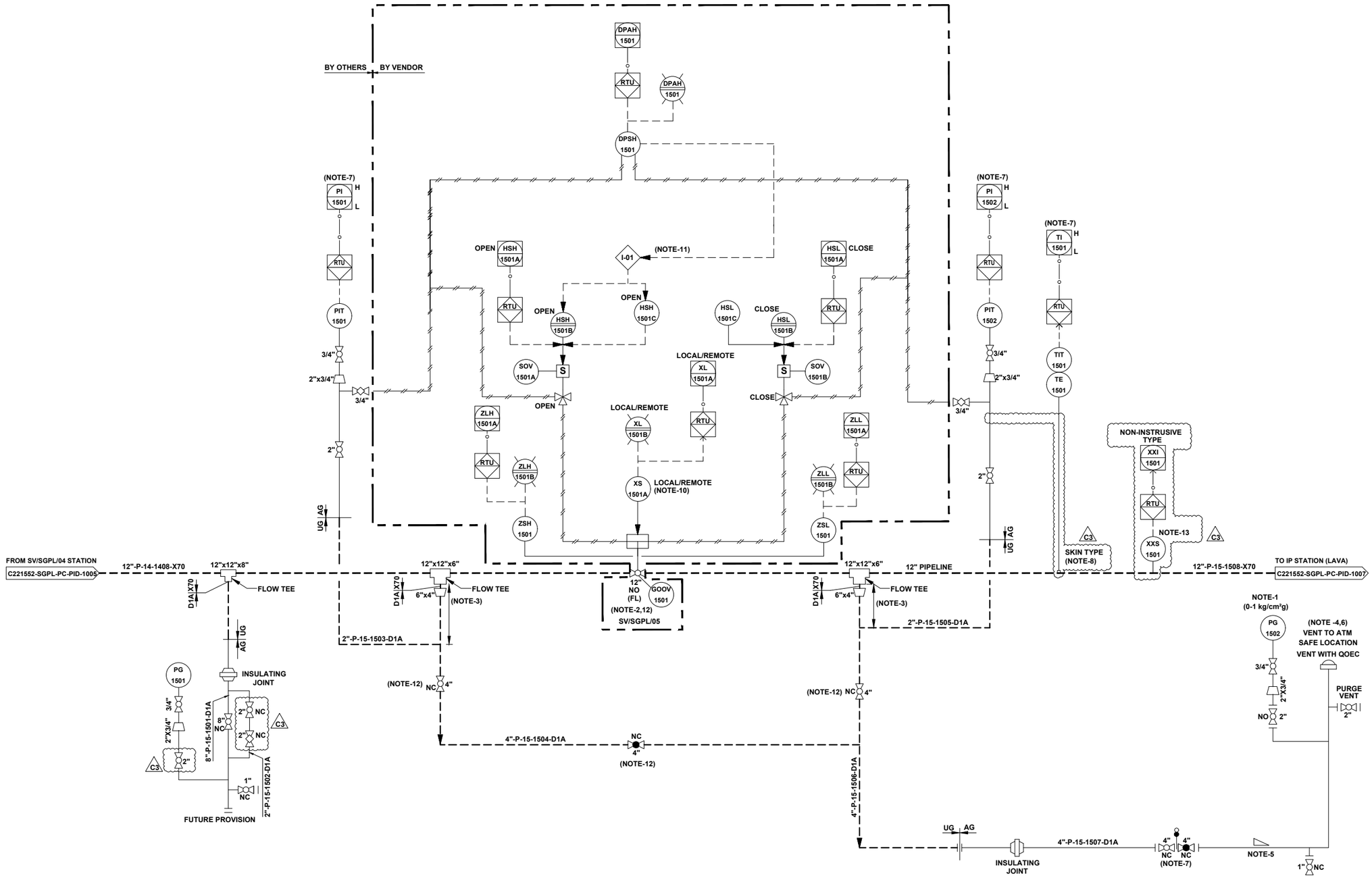

REFERENCE DRAWINGS

DRAWING TITLE	DRAWING NUMBER
P&ID LEGENDS	C221052-00-PC-LGD-1000

GENERAL NOTES:-

1. ALL LINE NUMBERING AND EQUIPMENT TAG NUMBERING SHALL BE PRE-FIXED WITH PROJECT CODE & AREA CODE "C221352-SGPL".
2. ALL INSTRUMENT TAG NUMBER SHALL BE PRE-FIXED WITH PROJECT CODE & AREA CODE "C221352-SGPL" .
3. ALL BALL VALVE IN PIPELINE EXCEPT IN MAIN LINE (PIGGABLE) SHALL BE REDUCED BORE TYPE.

NOTES :-

1. LOW RANGE PRESSURE GAUGE (0-1 kg/cm2g) SHALL BE PROVIDED WITH GAUGE SAVER.
2. VALVE SHALL BE FAIL TO STAY FAIL LAST TYPE.
3. MINIMUM DISTANCE SHOULD BE EITHER 1.5D OR 1 METER, WHICHEVER IS HIGHER.
4. VENT SHALL BE LOCATED AT SAFE DISTANCE (MIN. HEIGHT OF 3.0M ABOVE THE HEIGHT WORKING PLATFORM FALLING WITHIN 15.0M RADIUS VENT) AS PER PNGRB GUIDELINES.
5. LOW POINT DRAIN SHALL BE PROVIDED ON DEPRESSURIZATION LINE AT MINIMUM DISTANCE FROM RISER PIPE OF VENT. ADEQUATE SLOPE TO BE MAINTAINED IN HORIZONTAL SECTION OF THE PIPE FOR LOW POINT DRAIN CONNECTION.
6. VENT SHALL BE WITH QOEC.
7. DEPRESSURIZATION VALVE SHALL BE LOCATED IN SUCH A WAY THAT PIT 1501/1502 & TIT-1501 ON TRANSMITTER CAN BE READ DURING VENTING.
8. THERMOPAD SHALL BE WELDED TYPE.
9. JUMPER SHALL BE PROVIDED ACROSS ALL FLANGES.
10. LOCAL / REMOTE
    - COMMAND ACCEPTED FROM SCADA / PANEL IN LOCAL / MAIN CONTROL ROOM.
    - COMMAND ACCEPTED FROM FIELD ONLY.
11. THIS INTERLOCK IS PROVIDED TO INHIBIT THE OPENING OF VALVE FROM REMOTE AS WELL AS LOCAL IN CASE OF HIGH DIFFERENTIAL PRESSURE (> 3.0 kg/ cm²) ACROSS THE VALVE.
12. BURIED VALVE WITH STEM EXTENSION.
13. PIG SIGNALER CONNECTION SHALL BE CLAMP ON TYPES. C3

REV.	DATE	DESCRIPTION	PREP.	CHKD.	APPD.
C3	24.06.22	ISSUED FOR HAZOP	HS	AD	SKP
C2	23.05.22	ISSUED FOR APPROVAL	HS	AD	SKP
C1	16.05.22	ISSUED FOR CLIENT REVIEW	AK	AD	SKP
B1	04.05.22	ISSUED FOR IDC	AK	AD	SKP

CLIENT: INDRADHANUSH GAS GRID LIMITED

PMC: VCS QUALITY SERVICES PVT. LTD.

PROJECT: NORTH EAST GAS GRID PHASE-III OF IGGL

TITLE: P&ID FOR SV/SGPL/05 STATION AT SILIGURI - GANGTOK PIPELINE

SCALE:	N.T.S	TOTAL NO. OF SHTS:	1 OF 1
SIZE	JOB NO.	DRAWING NUMBER	REV.
A1	C221052	C221052-SGPL-PC-PID-1006	C3

FILE NAME : C221052-SGPL-PC-PID-1007

UNIT-16

PIG LAUNCHER / PIG RECEIVER	
TAG NO.	IP/SGPL-1601 / 1602
SERVICE FLUID	NATURAL GAS
SIZE MAJOR / MINOR	18" / 12"
DESIGN PRESSURE	92 kg/ cm²g
DESIGN TEMPERATURE	-29°C TO 65°C
OPERATING PRESSURE	30 kg/ cm²g
OPERATING TEMPERATURE	0°C TO 55°C C3

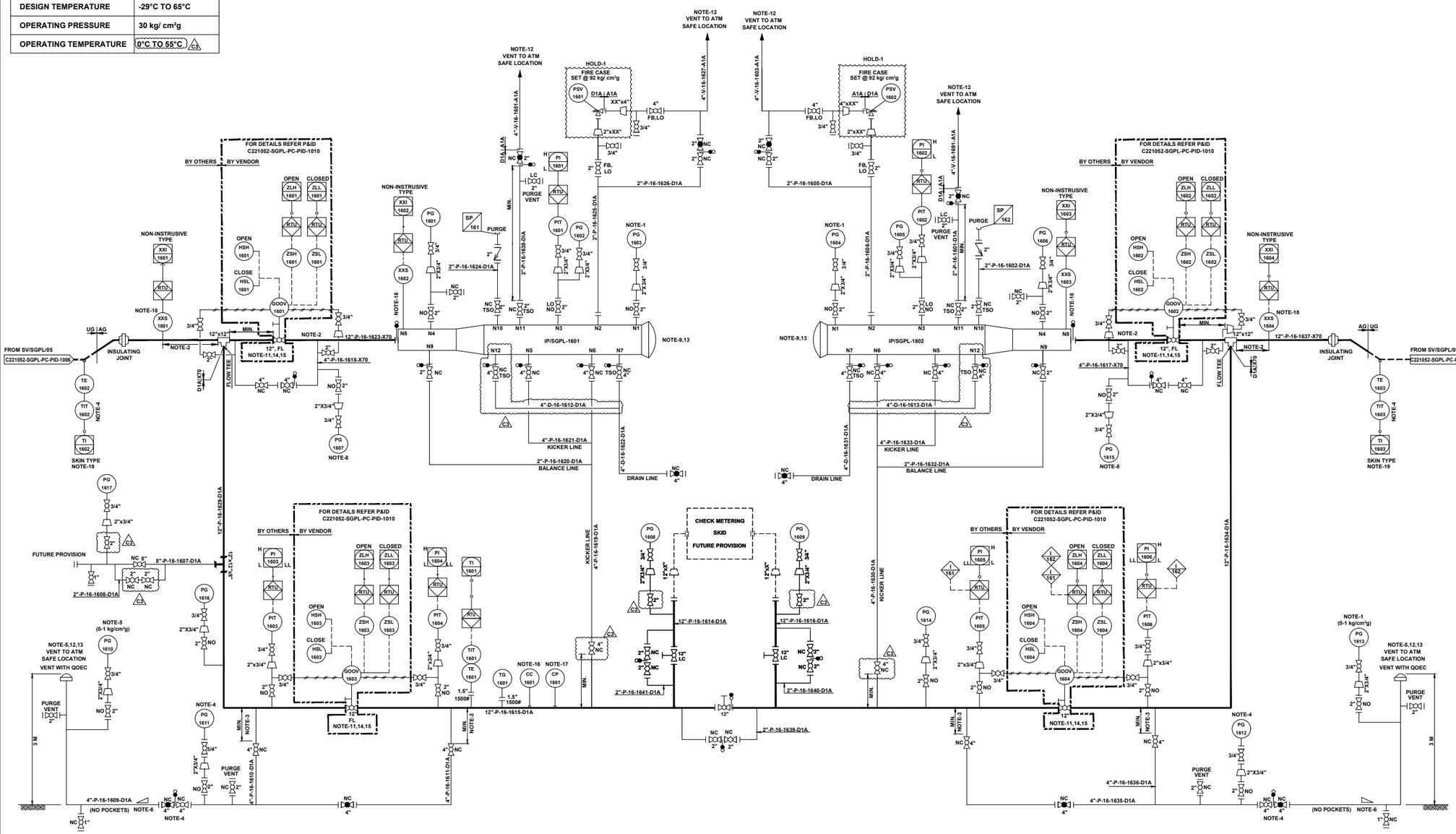

REFERENCE DRAWINGS

DRAWING TITLE	DRAWING NUMBER
P&ID LEGENDS	C221052-00-PC-LGD-1000

GENERAL NOTES:-

1. ALL LINE NUMBERING AND EQUIPMENT TAG NUMBERING SHALL BE PRE-FIXED WITH PROJECT CODE & AREA CODE "C221052".
2. ALL INSTRUMENT TAG NUMBER SHALL BE PRE-FIXED WITH PROJECT CODE & AREA CODE "C221052".
3. ALL BALL VALVE IN PIPELINE EXCEPT IN MAIN LINE (PIGGABLE) SHALL BE REDUCED BORE TYPE.

NOTES :-

1. LOW RANGE PRESSURE GAUGE (0-1 kg/cm²g) PROVIDED WITH GAUGE SAVER.
2. DISTANCE SHALL BE AT LEAST EQUAL TO THE LENGTH OF THE LONGEST INTELLIGENT PIG.
3. BRANCH VALVE SHALL BE LOCATED AT MINIMUM DISTANCE.
4. DEPRESSURIZATION VALVE SHALL BE LOCATED IN SUCH A WAY THAT PG-1611, PG-1612 & TIT-1602 / 1603 CAN BE READ DURING VENTING.
5. VENT SHALL BE WITH QOEC.
6. ADEQUATE SLOPE TO BE MAINTAINED IN HORIZONTAL SECTION OF PIPE IF ANY FOR LOW POINT DRAIN CONNECTION.
7. JUMPERS SHALL BE PROVIDED ACROSS ALL FLANGES.
8. PG-1607 & 1615 SHALL HAVE A RANGE OF (0-5 kg/cm²g) SHALL BE PROVIDED WITH GAUGE SAVER AND LEAST COUNT OF 0.1 kg/cm²g..
9. PROVISION OF A TROLLEY WITH PUSH ROD & PULLING LINE SHALL BE CONSIDERED TO ASSIST LOADING OR REMOVAL OF PIGS FROM THE SCRAPPER TRAP.
10. GAS DETECTORS TO BE PROVIDED IN DOWN WIND DIRECTION NEAR FLOW METERS, PIG BARRELS TO MONITOR LEAKAGE FROM FAILURE PRONE EQUIPMENTS PARTS,ACCESSORIES,VALVE & PIPES.
11. VALVE POSITION SHALL BE FAIL LAST.
12. ALL VENTS SHALL BE PROVIDED MIN. 3M HIGH FROM NEAREST HIGHEST OPERATING PLATFORM OR NEARBY STRUCTURE WITHIN 15M WHICHEVER IS HIGHER. NON SPARKING MATERIAL (BRASS) SHALL BE USED FOR FLAPPER TYPE VENT CONNECTION.
13. QUICK OPENING END CLOSURE TYPE DOOR CANNOT BE OPENED UNLESS PIG BARREL AND CONNECTED PIPING IS FULLY DEPRESSURIZE.
14. NECESSARY I/O's & SIGNAL FOR INTERFACE WITH SCADA SHALL BE DEVELOPED SEPARATELY.
15. ACTUATOR DETAILS OF GOV CONTROL LOGIC SHALL BE AS PER P&ID.
16. 'CC' SHALL BE OF WEIGHT LOSS TYPE.
17. ONLINE RETRIEVAL TYPE CORROSION MONITORING COUPON AND CORROSION PROBE SHALL BE PROVIDED FURTHER WHEREVER SCADA SYSTEM ARE AVAILABLE, THIS SYSTEM SHALL BE ONLINE SCADA COMPATIBLE OTHERWISE DATA SHALL BE COLLECTED BY OFFLINE DATA LOGGER.
18. PIG SIGNALER CONNECTION SHALL BE CLAMP ON TYPES.
19. THERMOPAD SHALL BE WELDED TYPE.

HOLDS:-

1. PSVs INLET & OUTLET SIZE ARE UNDER HOLD. SHALL BE FINALISED POST RECEIPT OF VENDOR DATA.

INTER LOCK:-

161 VALVE GOOV-1604 SHALL CLOSE ON LOW LOW PRESSURE OF THE PIPELINE AT STATION INLET.

162 VALVE GOOV-1604 SHALL CLOSE ON LOW LOW PRESSURE OF THE PIPELINE AT STATION OUTLET.

REV.	DATE	DESCRIPTION	PREP.	CHKD.	APPD.
C3	24.06.22	ISSUED FOR HAZOP	HS	AD	SKP
C2	23.05.22	ISSUED FOR APPROVAL	HS	AD	SKP
C1	16.05.22	ISSUED FOR CLIENT REVIEW	AK	AD	SKP
B1	04.05.22	ISSUED FOR IDC	AK	AD	SKP

CLIENT: INDRADHANUSH GAS GRID LIMITED

PMC: VCS QUALITY SERVICES PVT. LTD.

PROJECT: NORTH EAST GAS GRID PHASE-III OF IGGL

TITLE: P&ID FOR IP STATION AT LAVA (WEST BENGAL)

SCALE: N. T .S	TOTAL NO. OF SHTS: 1 OF 1		
SIZE	JOB NO.	DRAWING NUMBER	REV.
A1	C221052	C221052-SGPL-PC-PID-1007	C3

FILE NAME : C221052-SGPL-PC-PID-1008

SV STATION	
TAG NO	SV/SGPL/06
SERVICE FLUID	NATURAL GAS
DESIGN PRESSURE	92 kg/cm²g
DESIGN TEMPERATURE	-29 °C TO 65 °C
OPERATING PRESSURE	30 kg/cm²g
OPERATING TEMPERATURE	0°C TO 55°C C3

UNIT-17

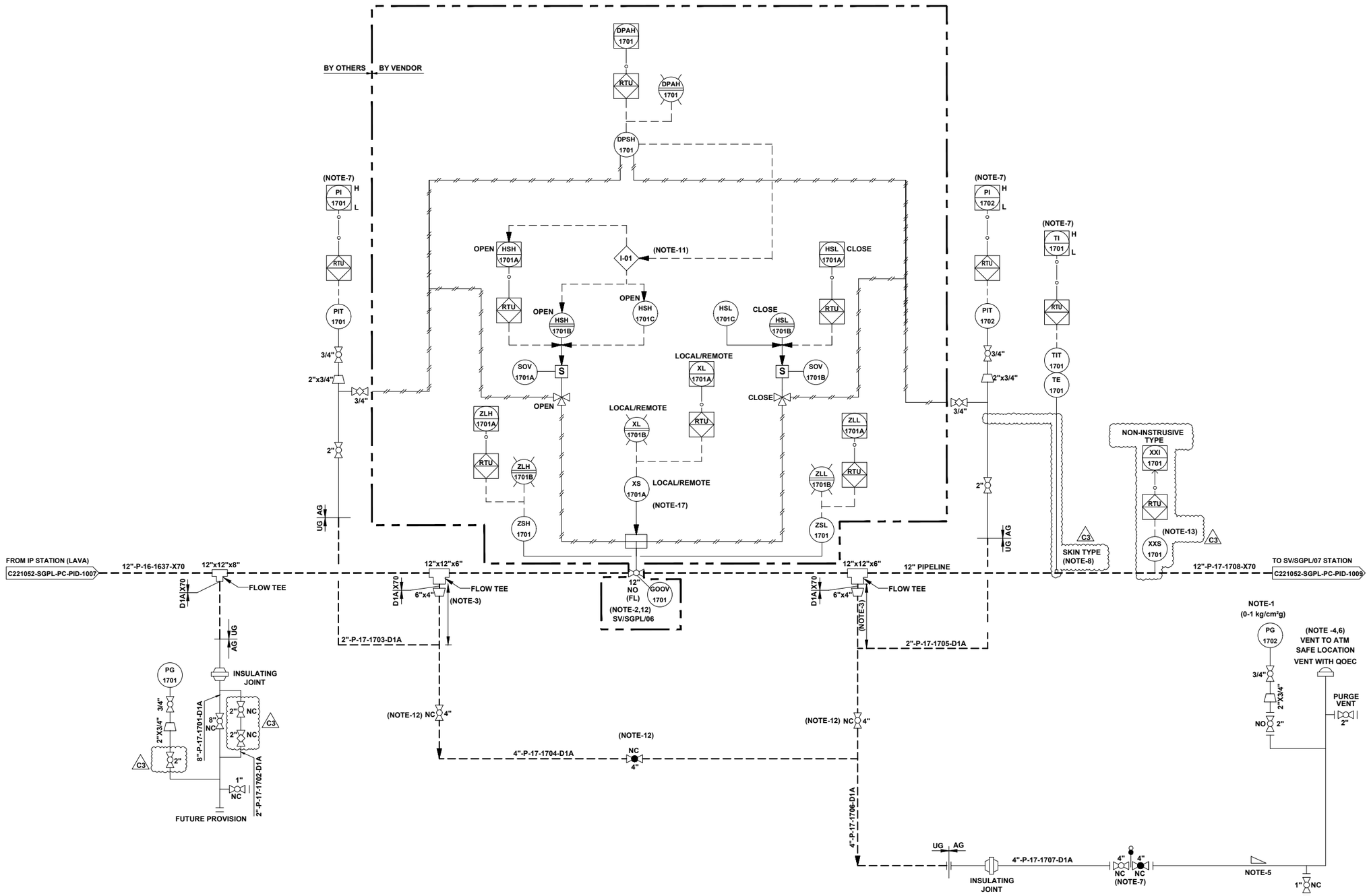

REFERENCE DRAWINGS	
DRAWING TITLE	DRAWING NUMBER
P&ID LEGENDS	C221052-00-PC-LGD-1000

GENERAL NOTES:-

1. ALL LINE NUMBERING AND EQUIPMENT TAG NUMBERING SHALL BE PRE-FIXED WITH PROJECT CODE & AREA CODE "C221152-SGPL".
2. ALL INSTRUMENT TAG NUMBER SHALL BE PRE-FIXED WITH PROJECT CODE & AREA CODE "C221152-SGPL" .
3. ALL BALL VALVE IN PIPELINE EXCEPT IN MAIN LINE (PIGGABLE) SHALL BE REDUCED BORE TYPE.

NOTES :-

1. LOW RANGE PRESSURE GAUGE (0-1 kg/cm2g) SHALL BE PROVIDED WITH GAUGE SAVER.
2. VALVE SHALL BE FAIL LAST TYPE.
3. MINIMUM DISTANCE SHOULD BE EITHER 1.5D OR 1 METER, WHICHEVER IS HIGHER.
4. VENT SHALL BE LOCATED AT SAFE DISTANCE (MIN. HEIGHT OF 3.0M ABOVE THE HEIGHT WORKING PLATFORM FALLING WITHIN 15.0M RADIUS VENT) AS PER PNGRB GUIDELINES.
5. LOW POINT DRAIN SHALL BE PROVIDED ON DEPRESSURIZATION LINE AT MINIMUM DISTANCE FROM RISER PIPE OF VENT. ADEQUATE SLOPE TO BE MAINTAINED IN HORIZONTAL SECTION OF THE PIPE FOR LOW POINT DRAIN CONNECTION.
6. VENT SHALL BE WITH QOEC.
7. DEPRESSURIZATION VALVE SHALL BE LOCATED IN SUCH A WAY THAT PIT 1701/1702 & TIT-1701 ON TRANSMITTER CAN BE READ DURING VENTING.
8. THERMOPAD SHALL BE WELDED TYPE.
9. JUMPER SHALL BE PROVIDED ACROSS ALL FLANGES.
10. LOCAL / REMOTE
    - COMMAND ACCEPTED FROM SCADA / PANEL IN LOCAL / MAIN CONTROL ROOM.
    - COMMAND ACCEPTED FROM FIELD ONLY.
11. THIS INTERLOCK IS PROVIDED TO INHIBIT THE OPENING OF VALVE FROM REMOTE AS WELL AS LOCAL IN CASE OF HIGH DIFFERENTIAL PRESSURE (> 3.0 kg/ cm²) ACROSS THE VALVE.
12. BURIED VALVE WITH STEM EXTENSION.
13. PIG SIGNALER CONNECTION SHALL BE CLAMP ON TYPES. C3

REV.	DATE	DESCRIPTION	PREP.	CHKD.	APPD.
C3	24.06.22	ISSUED FOR HAZOP	HS	AD	SKP
C2	23.05.22	ISSUED FOR APPROVAL	HS	AD	SKP
C1	16.05.22	ISSUED FOR CLIENT REVIEW	AK	AD	SKP
B1	04.05.22	ISSUED FOR IDC	AK	AD	SKP

CLIENT: INDRADHANUSH GAS GRID LIMITED

PMC: VCS QUALITY SERVICES PVT. LTD.

PROJECT: NORTH EAST GAS GRID PHASE-III OF IGGL

TITLE: P&ID FOR SV/SGPL/06 STATION AT SILIGURI - GANGTOK PIPELINE

SCALE:	N.T.S	TOTAL NO. OF SHTS:	1 OF 1
SIZE	JOB NO.	DRAWING NUMBER	REV.
A1	C221052	C221052-SGPL-PC-PID-1008	C3

FILE NAME : C221052-SGPL-PC-PID-1009

SV STATION	
TAG NO	SV/SGPL/07
SERVICE FLUID	NATURAL GAS
DESIGN PRESSURE	92 kg/cm²g
DESIGN TEMPERATURE	-29 °C TO 65 °C
OPERATING PRESSURE	30 kg/cm²g
OPERATING TEMPERATURE	0°C TO 55°C (C3)

UNIT-18

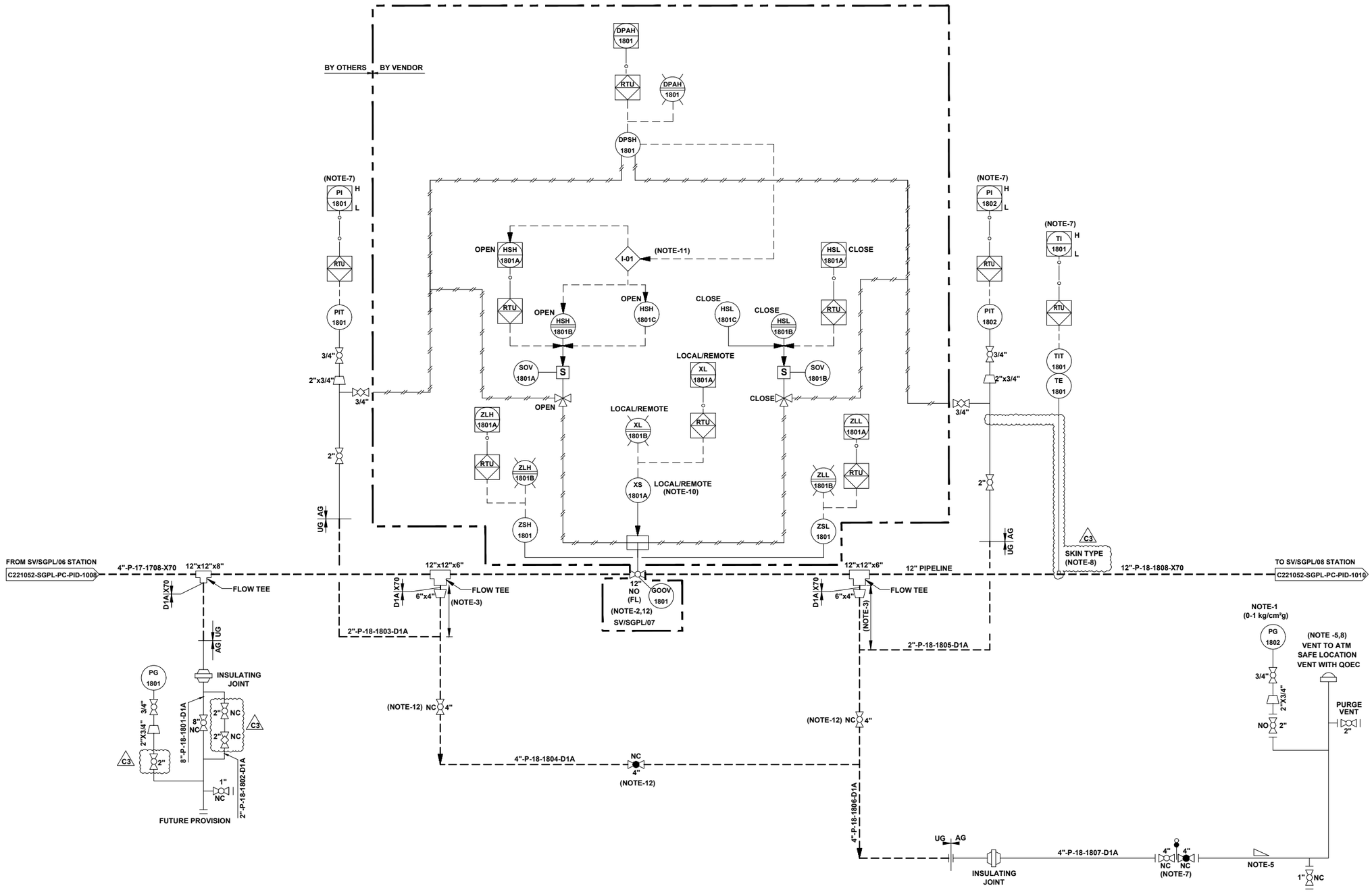

REFERENCE DRAWINGS	
DRAWING TITLE	DRAWING NUMBER
P&ID LEGENDS	C221052-00-PC-LGD-1000

GENERAL NOTES:-

1. ALL LINE NUMBERING AND EQUIPMENT TAG NUMBERING SHALL BE PRE-FIXED WITH PROJECT CODE & AREA CODE "C221152-SGPL".
2. ALL INSTRUMENT TAG NUMBER SHALL BE PRE-FIXED WITH PROJECT CODE & AREA CODE "C221152-SGPL" .
3. ALL BALL VALVE IN PIPELINE EXCEPT IN MAIN LINE (PIGGABLE) SHALL BE REDUCED BORE TYPE.

NOTES :-

1. VALVES UP TO 4" SHALL BE LEVER OPERATED TYPE & ABOVE 4" SHALL BE HYDRAULIC OPERATED TYPE.
2. VALVE SHALL BE FAIL LAST TYPE.
3. MINIMUM DISTANCE SHOULD BE EITHER 1.5D OR 1 METER, WHICHEVER IS HIGHER.
4. VENT SHALL BE LOCATED AT SAFE DISTANCE (MIN. HEIGHT OF 3.0M ABOVE THE HEIGHT WORKING PLATFORM FALLING WITHIN 15.0M RADIUS VENT) AS PER PNGRB GUIDELINES.
5. LOW POINT DRAIN SHALL BE PROVIDED ON DEPRESSURIZATION LINE AT MINIMUM DISTANCE FROM RISER PIPE OF VENT. ADEQUATE SLOPE TO BE MAINTAINED IN HORIZONTAL SECTION OF THE PIPE FOR LOW POINT DRAIN CONNECTION.
6. VENT SHALL BE WITH QOEC.
7. DEPRESSURIZATION VALVE SHALL BE LOCATED IN SUCH A WAY THAT PIT 1801/1802 & TIT-1801 ON TRANSMITTER CAN BE READ DURING VENTING.
8. THERMOPAD SHALL BE WELDED TYPE.
9. JUMPER SHALL BE PROVIDED ACROSS ALL FLANGES.
10. LOCAL / REMOTE
    - COMMAND ACCEPTED FROM SCADA / PANEL IN LOCAL / MAIN CONTROL ROOM.
    - COMMAND ACCEPTED FROM FIELD ONLY.
11. THIS INTERLOCK IS PROVIDED TO INHIBIT THE OPENING OF VALVE FROM REMOTE AS WELL AS LOCAL IN CASE OF HIGH DIFFERENTIAL PRESSURE (> 3.0 kg/ cm²) ACROSS THE VALVE.
12. BURIED VALVE WITH STEM EXTENSION.
13. LOW RANGE PRESSURE GAUGE (0-1 kg/cm2g) SHALL BE PROVIDED WITH GAUGE SAVER.

REV.	DATE	DESCRIPTION	PREP.	CHKD.	APPD.
C3	24.06.22	ISSUED FOR HAZOP	HS	AD	SKP
C2	23.05.22	ISSUED FOR APPROVAL	HS	AD	SKP
C1	16.05.22	ISSUED FOR CLIENT REVIEW	AK	AD	SKP
B1	04.05.22	ISSUED FOR IDC	AK	AD	SKP

CLIENT: INDRADHANUSH GAS GRID LIMITED

PMC: VCS QUALITY SERVICES PVT. LTD.

PROJECT: NORTH EAST GAS GRID PHASE-III OF IGGL

TITLE: P&ID FOR SV/SGPL/07 STATION AT SILIGURI - GANGTOK PIPELINE

SCALE: N.T.S	TOTAL NO. OF SHTS: 1 OF 1		
SIZE	JOB NO.	DRAWING NUMBER	REV.
A1	C221052	C221052-SGPL-PC-PID-1009	C3

FILE NAME : C221052-SGPL-PC-PID-1010

SV STATION	
TAG NO	SV/SGPL/08
SERVICE FLUID	NATURAL GAS
DESIGN PRESSURE	92 kg/cm²g
DESIGN TEMPERATURE	-29 °C TO 65 °C
OPERATING PRESSURE	30 kg/cm²g
OPERATING TEMPERATURE	0°C TO 55°C C3

UNIT-19

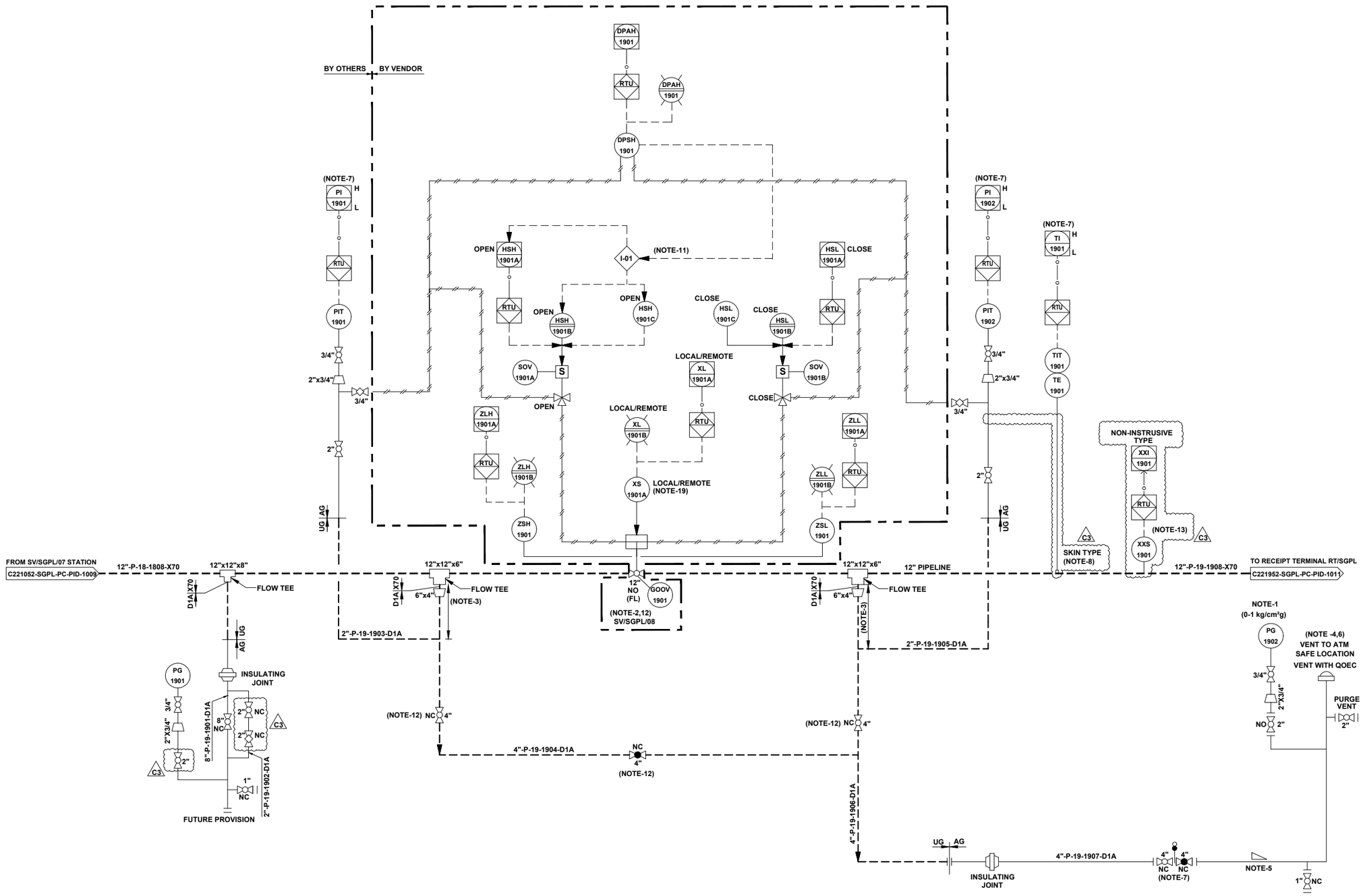

REFERENCE DRAWINGS	
DRAWING TITLE	DRAWING NUMBER
P&ID LEGENDS	C221052-00-PC-LGD-1000

GENERAL NOTES:-

1. ALL LINE NUMBERING AND EQUIPMENT TAG NUMBERING SHALL BE PRE-FIXED WITH PROJECT CODE & AREA CODE "C221152-SGPL".
2. ALL INSTRUMENT TAG NUMBER SHALL BE PRE-FIXED WITH PROJECT CODE & AREA CODE "C221152-SGPL" .
3. ALL BALL VALVE IN PIPELINE EXCEPT IN MAIN LINE (PIGGABLE) SHALL BE REDUCED BORE TYPE.

NOTES :-

1. LOW RANGE PRESSURE GAUGE (0-1 kg/cm2g) SHALL BE PROVIDED WITH GAUGE SAVER.
2. VALVE SHALL BE FAIL LAST TYPE.
3. MINIMUM DISTANCE SHOULD BE EITHER 1.5D OR 1 METER, WHICHEVER IS HIGHER.
4. VENT SHALL BE LOCATED AT SAFE DISTANCE (MIN. HEIGHT OF 3.0M ABOVE THE HEIGHT WORKING PLATFORM FALLING WITHIN 15.0M RADIUS VENT) AS PER PNGRB GUIDELINES.
5. LOW POINT DRAIN SHALL BE PROVIDED ON DEPRESSURIZATION LINE AT MINIMUM DISTANCE FROM RISER PIPE OF VENT. ADEQUATE SLOPE TO BE MAINTAINED IN HORIZONTAL SECTION OF THE PIPE FOR LOW POINT DRAIN CONNECTION.
6. VENT SHALL BE WITH QOEC.
7. DEPRESSURIZATION VALVE SHALL BE LOCATED IN SUCH A WAY THAT PIT 1901/1902 & TIT-1901 ON TRANSMITTER CAN BE READ DURING VENTING.
8. THERMOPAD SHALL BE WELDED TYPE.
9. JUMPER SHALL BE PROVIDED ACROSS ALL FLANGES.
10. LOCAL / REMOTE
    - COMMAND ACCEPTED FROM SCADA / PANEL IN LOCAL / MAIN CONTROL ROOM.
    - COMMAND ACCEPTED FROM FIELD ONLY.
11. THIS INTERLOCK IS PROVIDED TO INHIBIT THE OPENING OF VALVE FROM REMOTE AS WELL AS LOCAL IN CASE OF HIGH DIFFERENTIAL PRESSURE (> 3.0 kg/ cm²) ACROSS THE VALVE.
12. BURIED VALVE WITH STEM EXTENSION.
13. PIG SIGNALER CONNECTION SHALL BE CLAMP ON TYPES. C3

REV.	DATE	DESCRIPTION	PREP.	CHKD.	APPD.
C3	24.06.22	ISSUED FOR HAZOP	HS	AD	SKP
C2	23.05.22	ISSUED FOR APPROVAL	HS	AD	SKP
C1	16.05.22	ISSUED FOR CLIENT REVIEW	AK	AD	SKP
B1	04.05.22	ISSUED FOR IDC	AK	AD	SKP

CLIENT: INDRADHANUSH GAS GRID LIMITED

PMC: VCS QUALITY SERVICES PVT. LTD.

PROJECT: NORTH EAST GAS GRID PHASE-III OF IGGL

TITLE: P&ID FOR SV/SGPL/08 STATION AT SILIGURI - GANGTOK PIPELINE

SCALE:	N.T.S	TOTAL NO. OF SHTS:	1 OF 1
SIZE	JOB NO.	DRAWING NUMBER	REV.
A1	C221052	C221052-SGPL-PC-PID-1010	C3

FILE NAME : C221052-SGPL-PC-PID-1011

PIG LAUNCHER	
TAG NO.	RT/SGPL-2001
SERVICE FLUID	NATURAL GAS
SIZE MAJOR / MINOR	18" / 12"
DESIGN PRESSURE	92 kg/ cm²g
DESIGN TEMPERATURE	-29°C TO 65°C
OPERATING PRESSURE	30 kg/cm²g
OPERATING TEMPERATURE	0°C TO 55°C C3

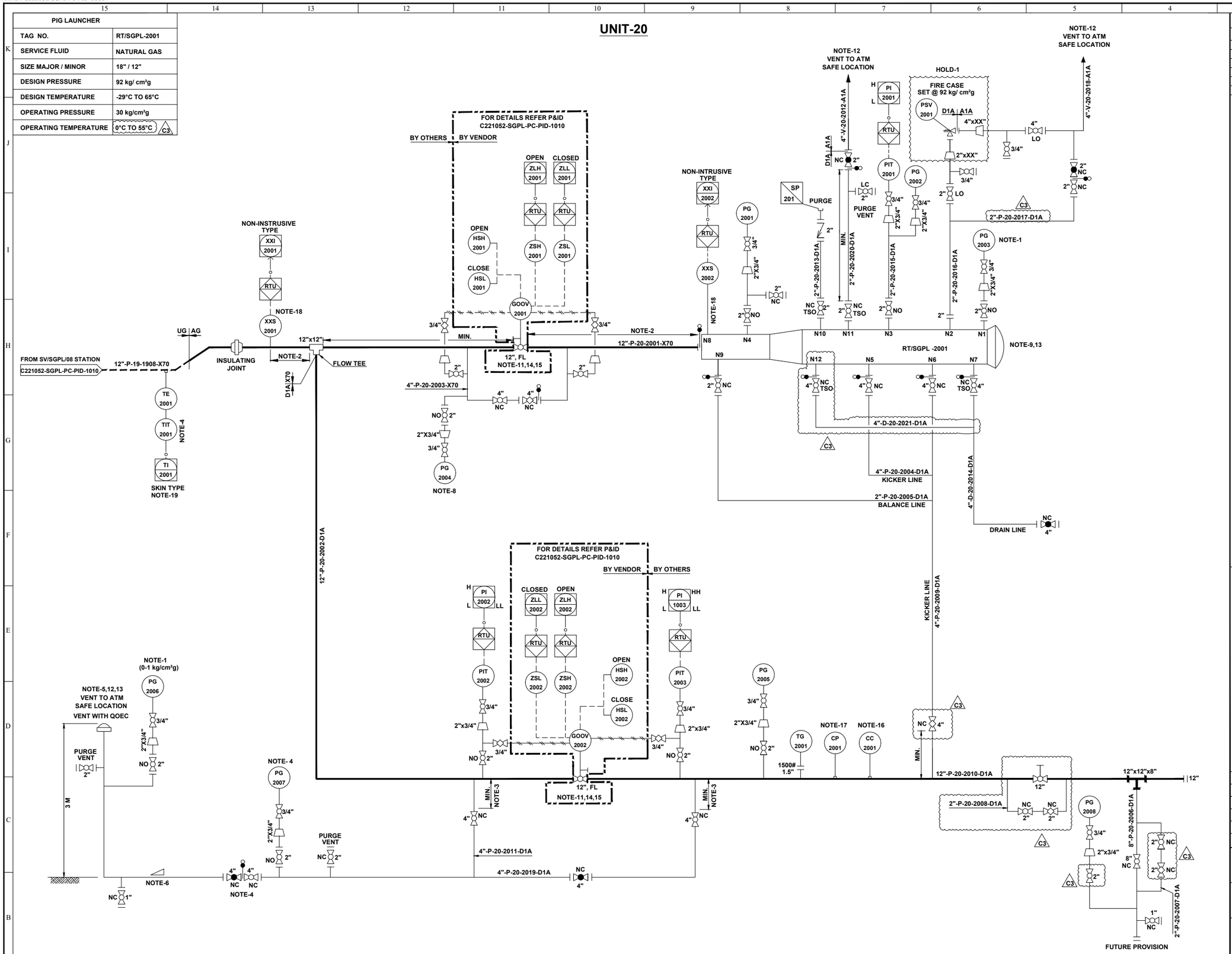

REFERENCE DRAWINGS

DRAWING TITLE	DRAWING NUMBER
P&ID LEGENDS	C221052-00-PC-LGD-1000

GENERAL NOTES:-

1. ALL LINE NUMBERING AND EQUIPMENT TAG NUMBERING SHALL BE PRE-FIXED WITH PROJECT CODE & AREA CODE "C221052-SGPL".
2. ALL INSTRUMENT TAG NUMBER SHALL BE PRE-FIXED WITH PROJECT CODE & AREA CODE "C221052-SGPL" .
3. ALL BALL VALVE IN PIPELINE EXCEPT IN MAIN LINE (PIGGABLE) SHALL BE REDUCED BORE TYPE.

NOTES :-

1. LOW RANGE PRESSURE GAUGE (0-1 kg/cm²g) SHALL BE PROVIDED WITH GAUGE SAVER.
2. DISTANCE SHALL BE AT LEAST EQUAL TO THE LENGTH OF THE LONGEST INTELLIGENT PIG.
3. BRANCH VALVE SHALL BE LOCATED AT MINIMUM DISTANCE.
4. DEPRESSURIZATION VALVE SHALL BE LOCATED IN SUCH A WAY THAT PG-2007 & TIT-2001 CAN BE READ DURING VENTING.
5. VENT SHALL BE WITH QOEC.
6. ADEQUATE SLOPE TO BE MAINTAINED IN HORIZONTAL SECTION OF PIPE IF ANY FOR LOW POINT DRAIN CONNECTION.
7. JUMPERS SHALL BE PROVIDED ACROSS ALL FLANGES.
8. PG-2004 SHALL HAVE A RANGE OF (0-5 kg/cm²g) SHALL BE PROVIDED WITH GAUGE SAVER AND LEAST COUNT OF 0.1 kg/cm²g. .
9. PROVISION OF A TROLLEY WITH PUSH ROD & PULLING LINE SHALL BE CONSIDERED TO ASSIST LOADING OR REMOVAL OF PIGS FROM THE SCRAPPER TRAP.
10. GAS DETECTORS TO BE PROVIDED IN DOWN WIND DIRECTION NEAR PIG BARRELS TO MONITOR LEAKAGE FROM FAILURE PRONE EQUIPMENTS PARTS,ACCESSORIES,VALVE & PIPES.
11. VALVE POSITION SHALL BE FAIL LAST.
12. ALL VENTS SHALL BE PROVIDED MIN. 3M HIGH FROM NEAREST HIGHEST OPERATING PLATFORM OR NEARBY STRUCTURE WITHIN 15M WHICHEVER IS HIGHER. NON SPARKING MATERIAL (BRASS) SHALL BE USED FOR FLAPPER TYPE VENT CONNECTION.
13. QUICK OPENING END CLOSURE TYPE DOOR CANNOT BE OPENED UNLESS PIG BARREL AND CONNECTED PIPING IS FULLY DEPRESSURIZE.
14. NECESSARY I/O's & SIGNAL FOR INTERFACE WITH SCADA SHALL BE DEVELOPED SEPARATELY.
15. ACTUATOR DETAILS OF GOOV CONTROL LOGIC SHALL BE AS PER P&ID.
16. 'CC' SHALL BE OF WEIGHT LOSS TYPE.
17. ONLINE RETRIEVAL TYPE CORROSION MONITORING COUPON AND CORROSION PROBE SHALL BE PROVIDED FURTHER WHEREVER SCADA SYSTEM ARE AVAILABLE, THIS SYSTEM SHALL BE ONLINE SCADA COMPATIBLE OTHERWISE DATA SHALL BE COLLECTED BY OFFLINE DATA LOGGER.
18. PIG SIGNALER CONNECTION SHALL BE CLAMP ON TYPES.
19. THERMOPAD SHALL BE WELDED TYPE.

HOLDS:-

1. PSVs INLET & OUTLET SIZE ARE UNDER HOLD. SHALL BE FINALISED POST RECEIPT OF VENDOR DATA.

VCS QUALITY SERVICES PVT. LTD. XVI

REV.	DATE	DESCRIPTION	PREP.	CHKD.	APPD.
C3	24.06.22	ISSUED FOR HAZOP	HS	AD	SKP
C2	23.05.22	ISSUED FOR APPROVAL	HS	AD	SKP
C1	16.05.22	ISSUED FOR CLIENT REVIEW	AK	AD	SKP
B1	30.04.22	ISSUED FOR IDC	AK	AD	SKP

CLIENT: INDRADHANUSH GAS GRID LIMITED

PMC: VCS QUALITY SERVICES PVT. LTD.

PROJECT: NORTH EAST GAS GRID PHASE-III OF IGGL

TITLE: P&ID FOR RECEIPT TERMINAL RT/SGPL AT GANGTOK

SCALE:	N. T .S	TOTAL NO. OF SHTS:	1 OF 1
SIZE	JOB NO.	DRAWING NUMBER	REV.
A1	C221052	C221052-SGPL-PC-PID-1011	C3

ENERGISING QUALITY

VCS QUALITY SERVICES PVT. LTD.

STANDARD SPECIFICATION
FOR
PAINTING

VPC – SS – PP - 2502

Rev. No	Date	Prepared By	Checked By	Approved By	Authorized By
03	28.01.2020	MB	AK	AD	SK
02	19.02.2018	ADE	RNR	AD	SK
01	15.05.2017	ADE	RNR	AD	SK

UNCONTROLLED COPY	:	If printed
CONTROLLED COPY	:	If in soft and signed

REVISION RECORD						
Rev.	**Revision Date**	**Prepared by**	**Checked by**	**Approved by**	**Authorized by**	**Revision Description**
00	15.05.2017					
		AS	SM	AD	SK	
01	09.02.2018					
		ADE	RNR	AD	SK	
02	10.04.2018					
		ADE	RNR	AD	SK	
03	28.01.2020					Format change. Doc Number Change from SS-PI-008 to VPC-SS-PP-2502
		MB	AK	AD	SK	

CONTENTS

1.0 GENERAL 2

2.0 CODES & STANDARDS 4

3.0 CONDITIONS OF DELIVERY 6

4.0 COMPOSITION OF THE PAINT PRODUCTS USED 6

5.0 IDENTIFICATION 7

6.0 SURFACE PREPARATION STANDARDS 8

7.0 PREPARATION OF THE SURFACES 9

8.0 METALLISATION 16

9.0 CARRYING OUT THE PAINTWORK 16

1.0 GENERAL

1.1 This technical specification shall be applicable for the work covered by the contract, and without prejudice to the provisions of various codes of practice, standard specifications etc. It is understood that contractor shall carry out the work in all respects with the best quality of materials and workmanship and in accordance with the best engineering practice and instructions of Engineer-In-Charge.

Wherever it is stated in the specification that a specific material is to be supplied or a specific work is to be done, it shall be deemed that the same shall be supplied or carried out by the contractor. Any deviation from this standard without written deviation permit from appropriate authority will result in rejection of job.

1.2 SCOPE

1.2.1 Scope of work covered in the specification shall include, without being limited to the following.

1.2.2 This specification defines the requirements for surface preparation, selection and application of primers and paints on external surfaces of equipment, vessels, machinery, piping, ducts, steel structures, external & internal protection of storage tanks for all services, MS Chimney without Refractory lining and Flare lines etc. The items listed in the heading of tables of paint systems is indicative only, however, the contractor is fully responsible for carrying out all the necessary painting, coating and lining on external and internal surfaces as per the tender requirement.

1.2.3 Extent of Work

1.2.3.1 The following surfaces and materials shall require shop, pre-erection and field painting:

a. All un-insulated C.S. & A.S. equipment like columns, vessels, drums, storage tanks (both external & internal surfaces), heat exchangers, pumps, compressors, electrical panels and motors etc.

b. All un-insulated carbon and low alloy piping, fittings and valves (including painting of identification marks), furnace ducts and stacks.

c. All items contained in a package unit as necessary.

d. All structural steel work, pipe, structural steel supports, walkways, handrails, ladders, platforms etc.

e. Flare lines, external surfaces of MS chimney with or without refractory lining and internal surfaces of MS chimney without refractory lining.

f. Identification colour bands on all piping as required including insulated aluminium clad, galvanised, SS and nonferrous piping.

g. Identification lettering/numbering on all painted surfaces of equipment/piping insulated aluminium clad, galvanized, SS and non-ferrous piping.

h. Marking / identification signs on painted surfaces of equipment/piping including hazardous service.

i. Supply of all primers, paints and all other materials required for painting (other than Owner supplied materials)

j. Over insulation surface of equipments and pipes wherever required.

k. Painting under insulation for carbon steel, alloy steel and stainless steel as specified.

l. Painting of pre-erection/fabrication and Shop primer.

m. Repair work of damaged pre-erection/fabrication and shop primer and weld joints in the field/site before and after erection as required.

n. All CS Piping, equipments, storage tanks and internal surfaces of RCC tanks in ETP plant.

1.2.3.2 The following surfaces and materials shall not require painting in general. However, if there is any specific requirement by the owner, the same shall be painted as per the relevant specifications:

a. Un-insulated austenitic stainless steel.
b. Plastic and/or plastic-coated materials
c. Non-ferrous materials like aluminum.

1.2.4 Documents

1.2.4.1 The contractor shall perform the work in accordance with the following documents issued to him for execution of work.

a. Bill of quantities for piping, equipment, machinery and structures etc.
b. Piping Line List.
e. Painting specifications including special civil defence requirements.

1.2.5 Unless otherwise instructed, final painting on pre-erection/ shop primed pipes and equipments shall be painted in the field, only after the mechanical completion, testing on systems are completed as well as after completion of steam purging wherever required.

1.2.6 Changes and deviations required for any specific job due to clients requirement or otherwise shall be referred to VCS for deviation permit.

2.0 CODES & STANDARDS

Without prejudice to the specifications of the contract, the following codes and standards shall be followed for the work covered by this contract.

IS: 5 Colors for ready mixed paints and enamels.

RAL DUTCH International Standard for colour shade (Dutch Standard)

IS: 101 Methods of test for ready mixed paints and enamels,

IS: 161 Heat resistant paints.

IS: 2074 Specifications for ready mixed paint, red oxide zinc chrome priming.

IS: 2379 Color code for identification of pipelines.

IS: 2932 Specification for enamel, synthetic, exterior (a) undercoating. (b) Finishing.

3.0 CONDITIONS OF DELIVERY

Packaging

Every recipient will be fitted with a hermetically-sealed lid with an opening that is sufficiently large to allow the contents to be stirred: the outside and inside are protected against oxidation, and, the lid, are marked with a strip of color identical to the contents.

4.0 COMPOSITION OF THE PAINT PRODUCTS USED

a) Quality

The composition and quality of the products may not differ from batch to batch. A batch is all of the products of a specified manufacture. If the analyses of products bring to light that the composition does not conform to the specifications of the paint manufacturer, the OWNER may refuse to use this batch of products. The paint products must comply with the following conditions

- They must have the viscosity necessary for the described use and the established condition: use of the brush - paint roller (spray gun only

for special cases and in the workshop)

b) Quality control - Sampling

While the works are in progress on the construction site, the OWNER may carry out sampling on the paint being used for the purpose of checking conformity. The paint products must be made available free of charge to the laboratory or the approved supervisory body in sufficient quantities so that all the tests can be carried out on the same batch.

If analyses reveal a non-conformity in the composition of the products used (tolerance of ± 3 % of the dosage of every component), the OWNER may refuse application of the product under consideration, halt the work and have the nonconforming product already applied removed.

Before proceeding the work, a product that does conform will be required. The only Purpose of the analysis is to reveal any nonconformity of the composition of the products. Their purpose is therefore not to assess the quality of the different components. The analyses concerned are not acceptance tests of the products supplied and in no way affect the obligations of the contractor specified in the contract towards the OWNER.

5.0 IDENTIFICATION

Every recipient will bear the following information:

- Name of the manufacturer
- Date and number of manufacture
- Name of the product type
- Batch no
- Net weight of the produced or the contents of the recipient
- Date of the expiry.

At the time of delivery, this packaging must bear labels in conformity with the legal stipulations in force.

Leaving the site after work

After completion of a job a general clean-up shall be carried out by the Contractor to remove all debris, materials or irregularities that his work has brought to the site so that it is left tidy:

The restoration work includes among other things:

- The removal of abrasives.
- The removal of the different protective coverings.
- The Contractor will make the required repairs to any damage after refitting the supports.
- The removal of paint and cleaning of the stains on the floor.

6.0 SURFACE PREPARATION STANDARDS

Following latest edition of standards shall be followed for surface preparations:

1. Swedish Standard Institution- SIS-05 5900-1967/ISO 8501-1
2. Steel Structures Painting Council, U.S.A. (Surface Preparation Specifications (SSPC-SP)
3. British Standards Institution (Surface Finish of Blast-cleaned for Painting) BS-4232.
4. National Association of Corrosion Engineers. U.S.A. (NACE).
5. IS-1477-1971 (Part-1) - Code of Practice for Painting of Ferrous metals in Buildings. (Part 1, Pre-treatment)

a) The contractor shall arrange, at his own cost to keep a set of latest edition of above standards and codes at site.

b) The paint manufacturer's instruction shall be followed as far as practicable at all times. Particular attention shall be paid to the following:

- Proper storage to avoid exposure as well as extremes of temperature.
- Surface preparation prior to painting.
- Mixing and thinning.
- Application of paints and the recommended limit on time intervals between coats.

c) Any painting work (including surface preparation) on piping or equipment shall be commenced only after the system tests have been completed and clearance for taking up painting work is given by the OWNER, who may, however, at his discretion authorize in writing, the taking up of surface preparation or painting work in any specific location, even prior to completion of system test.

7.0 PREPARATION OF THE SURFACES

7.1 General Specifications

The cases that occur in practice on building sites, with regard to painted surfaces, can be broken down as follows:

- Material of which the oxide content disappears by natural oxidation.
- Material that has already been covered with a layer of paint in the workshop.
- Material that is covered with old paint layers that show different degrees of weathering.

Good preparation of surface is the best guarantee for good anti-corrosion protection.

Paintwork may never begin until the surface to be treated is dry and is independent of the base coat and cleared of dirt, dust, rust, scale, grease, salt attack, cement powder, cement mud-scale, sand, oil, etc.

Based on the environmental conditions of coastal and saline nature, the Painting specification for station pipes defines the complete requirements like:

- Surface preparation standards like NACE etc.
- Sand blasting process
- Color Codes for piping
- Paint materials types and their DFT measurement.
- Selection and application of paints on external surfaces.

The pipeline passes through the coastal and marine environment, the **Table-4** of this specification to be followed for the painting works.

The method of preparation of the surface will be implemented in accordance with the preparation methods described below:

- Bright blast-cleaning
- Mechanical or Power tool cleaning
- Manual or hand tool cleaning

The Contractor should have the required material at his disposal to clean the surfaces to be coated thoroughly in accordance with the preparation methods regardless of the form or the condition of such surfaces. The cleaning devices that might be damaged during the surface preparation shall be screened off by the Contractor.

7.2 Air blast cleaning with abrasive

Before beginning cleaning by blasting, the person carrying out the work will take the following measures:

- Clear the steel surface of oil and/or grease;
- Ensure that each flange collar (section where the sealing is applied) is properly screened off against the blasting and the subsequent works;
- Check that no blasting grains can act into the pipes during this process. Any openings not sealed off must be screened off;
- Where there are valves, regulators and other devices, the manufacturer's identification plate will be dismantled so that all surfaces can be treated. The plate will then be put back again.
- Screen off all non-metal structures such as rubber where there is a filter;
- With valves, operators and other devices, care should be taken to ensure that no metal filings or paint get into the apparatus:
- The OWNER reserves the right to carry out part or all of these works himself.

To prevent rust forming quickly as the result of humidity on the blasted surface, cleaning by blasting may only be carried out when the temperature of the steel surface is at least 3°C higher than the dew-point of the ambient air.

Blasting may not be carried out if the relative degree of humidity exceeds 80%. The choice of the type of blasting medium used depends on local circumstances such as the possible presence of gas and the material to be blasted.

The abrasive to be used must conform to the local law i.e. it may contain no carbon and less than 1% free silicon dioxide. The Sa 3 will always be requested and must at least reach Sa 2½ during the initial stage of the paintwork. For blasting followed by metallization, the surface preparation degree to be achieved is always Sa 3. The degree of cleanliness to be obtained will be inspected in accordance with the Swedish standard SVENSK STANDARD ISO 8501-1-1988 SIS 05.5900.

- Sa 3: surface blasted down to the bare metal; when the surface is inspected with a magnifying glass, scale, rust and foreign bodies must be completely removed and it should be possible to raise a metallic -shine on the treated surface.

- Sa 2 1/2: blasted very carefully. Scale, rust and foreign bodies must be removed in such a way that anything left behind will only be visible as nuances (shading) or strips.

The blast-cleaning will be carried out by means of compressed air free of water and oil.

After the blasting and before painting, the surface should be completely cleaned of blasting material and so forth with a soft brush, a dry cloth or dry compressed air.

7.3 Mechanical or Power tool cleaning

If sandblasting is not permitted or if the metal structures are not easily accessible for blasting or blasting for one reason or other is technically unfeasible, mechanical de

rusting can be used instead. With mechanical cleaning by means of chipping, rotating steel brushes and sanding discs, a degree of cleanliness St. 3 should be reached.

St 3 : removal of the old paint layers of which the adhesion leaves something to be desired and/or of which the paint layer no longer fulfills the requirements.

If parts are present that are so corroded that St 3 is difficult to achieve, this should be notified to the OWNER representative prior to the start of the works.

N.B:
St. 3 : means removal of every old paint layer. Retouching means local polishing with St. 3 or Sa 3 followed by application of the desired painting system.

After mechanical cleaning, the surface should be made dust-flee with a cloth or a so brush, washed with an organic solvent and thoroughly dried off with a dry cloth (e.g. with 1.1.1. Trichoroethane such as Solvethane, Chloroethene).

7.4 Manual or Hand tool cleaning

Manual derusting with the aid of scrapers. steel brushes, sandpaper etc. shall only be permitted in exceptional cases for local repairs. Any deviation there from must be requested from the OWNER/ OWNER 's Representative.

With manual derusting, a surface preparation degree St 3 must be obtained. The length of the handles of the equipment used may not exceed 50 cm.

7.5 Preparation of a surface covered with a layer of paint in the workshop.

This layer is in general applied by the manufacturer, for example, on valves, regulators etc. Layers of this kind will be checked for their proper adhesion in accordance with ASTM D 3359, method A (Standard Test Method for measuring adhesion by tape test). The adhesion should be at least.

If the paint layer shows less adhesion or is incompatible with the rest of the system it should be completely removed. If the paint layer is not removed, the Contractor accepts it in the state in which the coating is found and the guarantee remains in force. The adhesion does not have to be examined if system 63 has already been applied in the workshop on behalf of the OWNER.

The Contractor, who must provide for the protection on the construction site, must therefore obtain the information regarding the treatment of the surface and the quality of the paint that was used and must, moreover, examine the adhesion of the layer on the construction site, the percentage of damage and weathering as well as the value of the preparation of the surface in the workshop together with the thickness thereof that must be supplemented if necessary.

a) Galvanized surface

Galvanized surfaces, both old and new will be carefully roughened up. Every foreign body (concrete splatters, chalk marks, grease and oil stains, etc.) will be removed. Thereafter, rub the surfaces with abundant water and, if necessary, with cleaning products.

To this end, nylon brushes will be used for every kind of dirt as well as for removing zinc salt residue. Thereafter, the surfaces will be treated in accordance with system 21. Where the zinc layer is lacking, it will be derusted manually to a degree of cleanliness St 3, after which a primer coat will be applied in accordance with system 22.

b) Metallized surfaces treated with an impregnation layer

- Degrease with the desired degreasing product:
- Clean under high pressure or with a product prescribed by the paint supplier.

If the paint layer adheres well and is applied on a clean base, the painting system described may be continued. If the percentage of damage and weathering does not exceed 5 % m. retouching may be considered. These partial repairs will be carried out.

If on the other hand, the percentage of damage does exceed 5 %/m or if the layer applied in the workshop comes loose the Contractor must draw the attention of the OWNER to this and carry out the complete application system.

7.6 Preparation of surfaces covered with earlier paint layers that show different degrees of weathering.

If the surfaces do not show deep weathering limited to the spread of rust by small pitted areas or non-penetrative rust in spots, it will very often be sufficient to clean the surfaces with abrasives or with an abrasive disc, then to rub them down with steel wool, remove the dust and wash off. If thick rust appears, in spots, scale rust and active rust canker, this should be removed with needle hammers or stripped away directly by blasting, removing the dust and washing off.

7.7 Preparation of concrete or cement plaster surfaces

Remove unsound paint layers and loose components with scrapers, blades or rotating steel brushes. Thoroughly clean the entire surface with water containing ammonia. Thoroughly remove moss, algae and fungal growths. Where these growths have been removed, treat the area with a fungicide in accordance with the instructions for use.

Once the entire area is completely dry, brush off the dead residue of moss, algae and fungus with a hard brush. In the case of reinforcement steel that has been laid bare, remove as rust, dust and grease as possible and treat with a printer coat. When painting

concrete surfaces, they must first be checked for cracks. Cracks larger than 0.3 mm must be repaired with an appropriate system in accordance with the type and extent of the repairs (e.g. injection with epoxy mortar). Repair damage such as cracks and bursts to concrete parts with a two-component mortar or preferably with micro-mortars. Finally check the alkalinity of the surface with the aid of litmus paper and neutralize it if necessary.

7.8 Use of solvents

It is sometimes necessary to use solvents when the surfaces to be painted are streaked with grease or oil. In this case a suitable organic solvent should be applied. The operation should be carried out with the aid of clean brushes or rags and clean solvent.

All the legal specifications in connection with solvents etc. must be adhered to. The OWNER/OWNER's Representative will be informed in advance of any toxicity or flammability. All measures must be taken to prevent any risk of fire and to nick out any possibility of poisoning (ventilation). The Contractor will provide drip collectors to keep the environment free of pollution.

7.9 Condition of the metal after stripping

The Contractor must call in a representative of the OWNER/OWNER's representative or of the Approved supervisory Body responsible for checking the condition of the metal during stripping and informing the OWNER/OWNER's representative immediately of any damage that he might have noticed.

- Deep corrosion of the plates - rivets - bolts
- Faulty welding
- Fittings that appear to be dangerous because of their age.

7.10 Removing coating from surface pipelines

The Contractor must have the equipment necessary for the removal of asphalt from the pipe without damaging the latter (scratching, impact, etc,). The Contractor undertakes to carry out the work in accordance with an approved procedure.

TABLE-1 (FOR CLAUSE 7.0)
SURFACE PREPARATION STANDARDS

SL. NO.	DESCRIPTION	VARIOUS INTERNATIONAL STANDARDS (EQUIVALENT)			REMARKS
		ISO 8501-1/ SIS-05 59 00	SSPC-SP, USA	NACE, USA	
1	Manual or hand tool cleaning Removal of loose rust, loose mill scale and loose paint, chipping, scrapping, standing and wire brushing. Surface should have a faint metallic sheen	ST.2	SSPC-SP-2	-	This method is applied when the surface is exposed to normal atmospheric conditions when other methods cannot be adopted and also for spot cleaning during maintenance painting.
2	Mechanical or power tool cleaning Removal of loose rust loose mill scale and loose paint to degree specified by power tool chipping, de-scaling, sanding, wire brushing and grinding, after removal of dust, surface should have a pronounced metallic sheen.	ST.3	SSPC-SP-3	-	
3	Dry abrasive Blast cleaning There are four common grades of blast cleaning				

3.1	White metal Blast cleaning to white metal cleanliness. Removal of all visible rust. Mill scale, paint & foreign matter 100% cleanliness with desired surface profile.	SA 3	SSPC-SP-5	NACE#1	Where extremely clean surface can be expected for prolong life of paint system.
3.2	Near white metal Blast cleaning to near white metal cleanliness, until at least 95% of each element of surface area is free of all visible residues with desired surface profile.	SA 2½	SSPC-SP-10	NACE#2	The minimum requirement for chemically resistant paint systems such as epoxy, vinyl, polyurethane based and inorganic zinc silicate paints, also for conventional paint systems used under fairly corrosive conditions to obtain desired life of paint system.
3.3	Commercial Blast Blast cleaning until at least two-third of each element of surface area is free of all visible residues with desired surface profile.	SA 2	SSPC-SP-6	NO.3	For steel required to be painted with conventional paints for exposure to mildly corrosive atmosphere for longer life of the paint systems.
3.4	Brush-off Blast Blast cleaning to white metal cleanliness, removal of all visible rust, mill scale, paint & foreign matter. Surface profile is not so important.	SA 1	SSPC-SP-7	NO.4	

8.0 METALLISATION

8.1 Applying the metallization

Metallization must be carried out in accordance with ISO 2063,

Metallization is carried out as rapidly as possible after blasting in order to limit corrosion of the pipes (max. 3 hours later). With metallization, a surface preparation degree Sa 3 is compulsory. The roughness of the blasted surfaces should be from 25 to 50µ R_{Max}.

- The metallizing is always carried out on dry parts in good weather conditions (maximum relative humidity 80 %);
- For metallization, a wire composed of 85 % zinc and 15 % aluminum with a minimum guaranteed degree of purity of 99.5 % is used (subject to other specifications). The application thereof is always carried out in accordance with the conditions of the manufacturer and may at all times be submitted to the OWNER's representative.
- The sealant should be applied maximum 3 hours alter metallization.
- The sealant must be thinned and applied as per the present specifications. A visual inspection whereby the sealant completely covers the metallization will suffice here.
- When evaluating the metallization, a negative deviation from the minimum coating thickness, to 80 µ for 20% of the measurements will be permitted.

9.0 COATING PROCEDURE AND APPLICATION

9.1 Conditions for carrying out paintwork

Painting may not be carried out in unsuitable conditions.

All preparatory work and painting may only he carried out in dry weather and at a minimum temperature of 10°C, except for special eases requested by the OWNER's Representative.

Unless otherwise stipulated in the specifications of the paint supplier, application of the paint is forbidden if it is forecast that the temperature will fall to below 0°C before the paint is dry. The temperature of-the surface to be painted must be at least 3°C higher than the dew point of the ambient air. Application of the paint is also not permitted if there is a danger that the coat of paint will not be dry before dew or condensation sets in.

The work must be stopped:

- If the temperature of the surface to be painted is higher than that described by the supplier.

- In rain, snow, mist or fog or when the relative humidity is higher than 80 %.

Coats that have not yet dried and have been exposed to frost, mist, snow or rain and might thereby be damaged must be removed after drying and the surfaces must be repainted at the expense of the Contractor.

Working in direct sunlight or in hot weather must be avoided,

The first coat of paint must be applied maximum 3 hours after the preparation of the surface of the relative humidity of the air is between 50% and 80%. This time span may be increased to 6 hours if the relative humidity is less than 50%. In all cases, the preparation of the surface must exhibit degree Sa 3 and at the very least the appearance of degree Sa 2 ½ at the time of painting.

The coats of paint may only be applied on carefully cleaned surfaces that must be dry and free of grease and dust.

9.2 Special conditions

Painting may be carried out when the Contractor can be sure that the instructions of the paint supplier have been scrupulously followed with regard to the parameters in the following (non-exhaustive) list:

- Ambient temperature.
- Surface temperature.
- Relative humidity.
- Dew point.
- Drying times.

The Contractor must in this respect be able to produce the instructions for the paint on the site. The OWNER/CONSULTANT will guarantee 100% supervision in this regard during the execution of the work.

In addition, the paintwork may only be carried out to a minimum ambient temperature of 5°C and/or to a maximum relative degree of humidity of 85 %. Application of the paint is also not permitted if there is a danger that the coat of paint will not be dry before dew or condensation sets in.

10.0 PAINT MATERIAL

Manufacturers shall furnish the characteristics of all paints indicating the suitability for the required service conditions. Primer and finish coats shall be of class-I quality and shall conform to the following:

a) Primer (P-1)

Red oxide Zinc Chromate Primer

Type and Composition	Single pack, Modified phenolic alkyd medium pigmented with red oxide and zinc chromate.
Volume solids	30 - 35% (min)
DFT	25 microns/coat (min)
Covering capacity	12 - 13 M^2/Lit/coat

b) Primer (P-2)

High build chlorinated rubber zinc phosphate primer

Type and Composition	Single pack, Air Drying Chlorinated rubber medium Plasticized with unsaponifiable plasticiser pigmented with zinc phosphate
Volume solids	35 - 40% (min)
DFT	30 - 40 microns/coat (min)
Covering capacity	7 - 8 M^2/Lit/Coat

c) Primer (P-3)

High build zinc phosphate primer

Type and Composition	Single Pack, Synthetic medium, pigmented with zinc phosphate.
Volume solids	40 - 45% (min)
DFT	35 - 50 microns/coat (min)
Covering capacity	10 - 12 M^2/Lit/coat
Heat resistance	Upto 80 ºC (dry)

d) Primer (P-4)

Etch Primer / Wash Primer

Type and Composition	Two pack Poly vinyl butyral resin medium cured with phosphoric acid solution pigmented with zinc tetroxy chromate.
Volume solids	7 - 8% (min)
DFT	8 - 10 microns/coat (min)
Covering capacity	7 - 8 M^2/lit/coat

e) Primer (P-5)

Epoxy Zinc Chromate Primer

Type and Composition	Two packs, Polyamide cured epoxy resin medium pigmented with zinc chromate.
Volume solids	40 % (min)
DFT	35 microns/coat (min)
Covering capacity	11 - 12 M^2/lit/Coat

f) Primer (P-6)

Epoxy Zinc Phosphate Primer

Type and Composition	Two packs, Polyamide cured Epoxy resin medium pigmented with zinc phosphate.
Volume solids	40% (min)
DFT	35 - 50 microns/coat (min)
Covering capacity	11 - 12 M^2/lit/coat

g) Primer (P-7)

Epoxy high build M10 Paint (Intermediate Coat)

Type and composition	two pack Poly Polyamide cured epoxy resin medium pigmented with micaceous iron oxide. Volume solids 7- 8%
Volume Solids	50% (min)
DFT	100 microns/coat (min)
Covering capacity	5.0 M^2/lit/coat

h) Primer (P-8)

Epoxy Red Oxide zinc phosphate primer

Type and Composition	two pack. Polyamine cured epoxy resin pigmented with Red oxide and Zinc phosphate.
Volume solids	42% (min)
DFT	30 microns/coat (min)
Covering capacity	13 - 14 M^2/lit/coat

i) Primer (P-9)

Epoxy based tie coat (suitable for conventional alkyd based coating prior to application of acrylic polyurethane epoxy finishing coat)

Type and Composition	Two packs, Polyamide cured epoxy resin medium suitably pigmented.
Volume solids	50 - 60% (min)
DFT	50 microns/coat (min)
Covering capacity	10 - 12 M^2/Lit/Coat

j) Finish Coats (F-1)

Synthetic Enamel

Type and Composition	Single pack, Alkyd medium pigmented with superior quality water and weather resistant pigments
Volume solids	30 - 40% (min)
DFT	20 - 25 microns/coat
Covering capacity	16 - 18 M^2/lit/Coat

k) Finish coat (F-2)

Acrylic Polyurethane paint

Type and Composition	Two pack, Acrylic resin and iso-cyanate hardener suitably pigmented.
Volume Solids	40% (min)
DFT	30 - 40 microns / coat
Covering Capacity	10 - 12 M^2/lit/ coat

l) Finish Coat (F-3)

Chlorinated Rubber Paint

Type and Composition	Single pack, Plasticised chlorinated rubber medium with chemical & weather resistant pigments.
Volume solids	40% (min)
DFT	30 - 40 microns/coat (min)
Covering capacity	8 - 10 M^2/lit /coat

m) Finish Coat (F-4)

High build chlorinated rubber M10 paint.

Type and Composition	Single pack Chlorinated rubber based high build pigmented with micaceous iron oxide.
Volume solids	40 - 50% (min)
DFT	65 - 75 microns/coat
Covering capacity	6.0 - 7.0 M^2/lit/coat

n) Finish coat (F-5)

Chemical Resistant Phenolic based Enamel

Type and Composition	Single pack phenolic medium suitably pigmented.
Volume solids	35 - 40% (min)
DFT	25 microns/ coat
Covering capacity	15.0 M^2/lit/coat

o) Finish Coat (F-6)

Epoxy High Building Coating

Type and Composition	Two pack. Polyamide-amine cured epoxy resin medium suitably pigmented.
Volume solids	60 - 65% (min)
DFT	100 microns/coat (min)
Covering capacity	6.0 - 6.5 M^2/lit/coat

p) Finish Coat (F-7)

High build Coal Tar Epoxy

Type and Composition	Two pack, Polyamine cured epoxy resin blended with Coal Tar.
Volume solids	65% (min)
DFT	100 - 125 microns/coat
Covering capacity	6.0 - 6.5 M^2/lit/coat

q) Finish Coat (F-8)

Self-priming epoxy high build coating (complete rust control coating)

Type and Composition	Two packs. Polyamide-amine cured epoxy resin suitably pigmented. Capable of adhering to manually prepared surface and old coatings.
Volume solids	65 - 80% (min)
DFT	125 - 150 microns/coat
Covering capacity	4 - 5 M^2/lit/coat

r) Finish Coat (F-9)

Inorganic Zinc Silicate coating

Type and Composition	Two packs, self-cured solvent based inorganic zinc silicate coating.
Volume solids	60% (min)
DFT	65 - 75 microns/coat
Covering capacity	8 - 9 M^2/lit/coat

s) Finish coat (F-10)

High build Black

Type and Composition	Single pack. Reinforced bituminous composition phenol based resin.
Volume solids	55 - 60% (min)
DFT	100 microns/coat (min)
Covering capacity	5.5 - 6.0 M^2/lit/coat

t) Finish Coat (F-11)

Heat Resistant Aluminium Paint Suitable up to 250°C.

Type and Composition	Duel container (paste & medium). Heat resistant spec varnish medium combined with aluminium flakes.
Volume solids	20 - 25% (min)
DFT	20 microns/coat (min)
Covering capacity	10 - 12 M^2/lit/coat

u) Finish Coat (F-12)

Heat Resistant Silicon Paint suitable up to 400º C.

Type and Composition	Single pack Silicone resin based with aluminium flakes.
Volume solids	20 - 25% (min)
DFT	20 microns/coat (min)
Covering capacity	10 - 12 M^2/lit/coat

v) Finish Coat (F-13)

Synthetic Rubber Based Aluminium Paint Suitable up to 150°C.

Type and Composition	Single Pack, Synthetic medium rubber medium combined with leafing Aluminium,
DFT	25 microns/coat (min)
Covering capacity	9.5 M^2/lit/coat

Notes:

1 Covering capacity and DFT depends on method of application Covering capacity specified above is theoretical. Allowing the losses during application, min specified DFT should be maintained.

2. All paints shall be applied in accordance with manufacturer's instructions for surface preparation, intervals, curing and application. The surface preparation quality and workmanship should be ensured.

3. Selected chlorinated rubber paint should have resistance to corrosive atmosphere and suitable for marine environment,

4 All primers and finish coats should be cold cured and air-drying unless otherwise specified.

5. Technical data sheets for all paints shall be supplied at the time of submission of quotations.

6. In case of use of epoxy tie coat, manufacturer should demonstrate satisfactory test for inter coat adhesion. In case of limited availability of epoxy tie coat (P-9) alternate system may be used taking into the service requirement of the system.

7. In case of F-6, F-9, F-1 1 & F-1 2 Finish Coats, No Primer are required.

MANUFACTURERS

The paints shall conform to the specifications given above and Class-I quality in their products range of any of the-following manufacturer or other approved vendors:

i) Asian Paints (India) Ltd.
ii) Bombay Paints
iii) Berger Paints India Ltd.
iv) Akzo Nobel
v) Jenson & Nicholson
vi) Shalimar Paints

STORAGE

All paints and painting material shall be stored only in rooms to be provided by contractor and approved by OWNER/ OWNER 's Representative for the purpose. AlI necessary precautions shall be taken to prevent fire. The storage building shall preferably be separate from adjacent, building.

A signboard bearing the words given below shall be clearly displayed outside:
PAINT STORAGE No NAKED LIGHT highly -inflammable

12.0 COLOR CODE FOR PIPING:

i) For identification of pipelines, the color code as per Table -1 shall be used.

ii) The color code scheme is intended for identification of the individual group of the pipeline. The system of color coding consists of a ground color and color bands superimposed on it.

iii) Colors (Ground) as given in Table-2 shall be applied throughout the entire length of un insulated pipes, on the metal cladding & on surfaces. Ground color coating of minimum 2m length or of adequate length not to be mistaken as color band shall be applied at places requiring color bands. Color bands shall be applied as per approved procedure.

iv) Line coating shall meet DIN 30670 standard for external coating and API 5L RP – 2 for internal coating.

v) The thickness for the epoxy should be 180 microns, adhesive 200 microns and balance should be PE .

vi) The minimum coating thickness on weld seam shall be 3.2 mm and minimum coating thickness on body should be 3.2.

vii) Minimum thickness for liquid epoxy for internal coating should be 100 ± 20 microns.
Max design temperature for coating should be considered +80 ºC.

COLOR CODE:

A) Ball Valve (Above Ground) : Off White
B) Globe Valve (Above Ground) : Oxford Blue-RAL 5005, IS-519941005
C) Check Valve(Above Ground) : Oxford Blue-RAL 5005, IS-519941005
D) Launcher / Receiver : Yellow Golden
E) Jib Crane / Trolley : Yellow Golden
F) All underground valves shall have epoxy base coating after surface finish of SA 2:5
G) Valves and above ground pipes need to be properly blasted to achieve surface finish of Sa 2:5 before the application of paints.

Table 12.1 Colour Coding Scheme for Pipes and Equipment

SI. No.	Description	Ground Color	First Color Band	Second Color Band
1	**COMPRESSED AIR**			
a)	Plant Air	Sky Blue	Silver Grey	-
b)	Instrument Air	Sea Green	Black	-
2	**GASES**			
a)	Charge Gas	Canary Yellow	Signal Red	Smoke Grey
b)	Regeneration Gas	Canary Yellow	White	Dark Violet
c)	Residue Gas	Canary Yellow	White	French Blue
d)	LPG	Canary Yellow	Brilliant Green	White
e)	Acetylene	Canary Yellow	Dark violet	-
	Flare Lines	Heat resistant aluminium		
f)	Fire water and Foam & Extinguisher	Post office red		
3	**ALL EQUIPMENT**			
a)	Vessels. Columns, exchangers, etc. containing non- hazardous fluids.	Light Grey		
b)	Base Frame/Structure	Black		
c)	All equipment containing hazardous fluids	Canary Yellow		

d)	Pipe carrying hazardous fluids	Bar is to be replaced by Hazardous Marking as per IS:2379 Clause 7.1C		

IDENTIFICATION SIGN

i) Colors of arrows shall be black or white and in contrast to the color on which they are superimposed.

ii) Product names shall be marked at pump inlet, outlet and battery limit in a suitable size as approved by OWNER.

iii) Size of arrow shall be either of the following:

a) Color Bands

Minimum width of color band shall be as per approved procedure.

b) Whenever it is required by the OWNER to indicate that a pipeline carries a hazardous material, a hazard marking of diagonal stripes of black and golden, yellow as per IS:2379 shall be painted on the ground color.

IDENTIFICATION OF EQUIPMENT

All equipment shall be stenciled in black or white on each vessels, column, equipment, and painting as per approved procedure.

INSPECTION AND TESTING

1. All painting materials including primers and thinners brought to site by contractor for application shall be procured directly from manufactures as per specifications and shall be accompanied by manufacturer's test certificates Paint formulations without certificates are not acceptable.

2. The painting work shall be subject to inspection by OWNER/ OWNER's Representative at all times. In particular, following stage wise inspection will be performed and contractor shall offer the work for inspection and approval at every stage before proceeding with the next stage.

In addition to above. record should include type of shop primer already applied on equipment e.g. Red oxide zinc chromate or zinc chromate or Red lead primer etc.

Any defect noticed during the various stages of inspection shall be rectified by the contractor to the entire satisfaction of OWNER/ OWNER's Representative before proceeding further. Irrespective of the inspection, repair and approval at intermediate stages of work. Contractor shall be responsible for making good any defects found during final inspection/guarantee period/defect liability period as defined in general condition of contract. Dry film thickness (DFT) shall be checked and recorded after application of each coat and extra coat of paint should be applied to make-up the DFT specified without any extra cost to OWNER.

PRIMER APPLICATION

i. The contractor shall provide standard thickness measurement instrument with appropriate range(s) for measuring.

   Dry film thickness of each coat, surface profile gauge for checking of surface profile in case of sand blasting. Holiday detectors and pinhole detector and protector whenever required for checking in case of immerse conditions.

ii. At the discretion of OWNER/ OWNER's Representative, contractor has to provide the paint manufacturers expert technical service at site as and when required. For this service, there should not be any extra cost to the OWNER.

iii. Final Inspection shall include measurement of paint dry film thickness, check of finish and workmanship. The thickness should be measured at as many points/ locations as decided by OWNER/ OWNER's Representative and shall be within +10% of the dry film thickness.

iv. The contractor shall produce test reports from manufacturer regarding the quality of the particular batch of paint supplied. The OWNER shall have the right to test wet samples of paint at random for quality of same. Batch test reports of the manufacturer's for each batch of paints supplied shall be made available by the contractor.

18.0 PAINT SYSTEMS

The paint system should vary, with type of environment envisaged in and around the plants. The types of environment as given below are considered for selection of paint system. The paint system is also given for specific requirements.

a) Normal Industrial Environment, Table 18.2.
b) Corrosive industrial Environment, Table 18.3
c) Coastal & Marine Environment, Table 18.4

Notes 1. Primers and finish coats for any particular paint systems shall be from same manufacturer in order to ensure compatibility.

TABLE 18.1: LIST OF PRIMERS & FINISH PAINTS

PRIMERS	
P-1	Red oxide Zinc chromate Primer
P-2	Chlorinated rubber zinc Phosphate Primer
P-3	High build Zinc phosphate Primer
P-4	Etch Primer/Wash Primer
P-5	Epoxy Zinc Chromate Primer
P-6	Two component Epoxy Zinc Phosphate Primer cured with polyamine hardener
P-8	Epoxy red oxide zinc phosphate primer
FINISH COATS / PAINTS	
F-1	Synthetic Enamel
F-2	Two component Acrylic – Polyurethane finish paint
F-3	Chlorinated Rubber finish paint
F-5	Chemical resistant phenolic based enamel
F-6	High Build Epoxy finish coating cured with **polyamide** hardener
F-7	High build Coal Tar Epoxy coating cured with **polyamine** hardener
F-8	Self priming surface Tolerant High Build epoxy coating. cured with **polyamine** hardener
F-9	Two component Inorganic Zinc Silicate coating
F-10	High build Reinforced bituminous composition phenol based resin.
F-11	Heat resistant synthetic medium based Aluminium paint suitable for 250 deg C
F-12	Two component Heat resistant Silicone Aluminium paint. suitable for 400 deg C
F-13	Synthetic based aluminium Paint suitable for 150 deg C

Table – 18.2: Painting System for Normal Industrial Environment for Piping and Equipment (Above Ground)

Sl. No.	Temp. Range	Surface Preparation	Primer	Finish Coat	Total DFT	Remarks
1	-10 to 20	SSPC-SP-3	One coat P-2 50 microns / coat (min)	One coat F-4 65 microns/ coat (min) Two coats F-3, 30 Microns/coat (min)	175	Primer and Finish coat can be applied at ambient temp.
2	21 to 60	SSPC-SP-6	Two coats P-1, 25 microns/ coat (min.)	Two coats of F-1, 20 microns/coat (min)	90	-
3	61 to 80	SSPC-SP-6	Two coats P-3, 50 microns/ coat (min)	Two coats of F-13, 25 microns/coat (min)	150	-
4	81 to 250	SSPC-SP-6	-	Three coats of F-11, 20 microns/ coat (min)	60	Paint application at ambient temp. curing at elevated temp. during start-up.
5	251 to 400	SSPC-SP-10	-	Three coats of F-12, 20 microns/ coat (min)	60	-do-

Table – 18.3: Painting System for Corrosive Industrial Environment for Piping and Equipment (Above Ground)

SI. No.	Temp. Range	Surface preparation	Primer	Finish Coat	Total DFT	Remarks
1	-14 to 80	SSPC-SP-10	Two coats P-6, 35 microns / coat (min.)	One coats F- 6, 100 microns coat (min.) and one coats F- 2 40 microns coat (min.)	210	Paint application at ambient temp.
2	81 to 250	SSPC-SP-10	-	Three coats F-11, 20 Microns / coat (min.)	60	Paint application at ambient temp. and curing at 250°C for 4 hours
3	81 to 400	SSPC-SP-10	-	Three coats F-12, 20 Microns / coat (min.)	60	Paint application at ambient temp. and curing at 250°C for 4 hours

Table – 18.4 :Painting System for Coastal and Marine Environment for Piping and Equipment (Above Ground)

SI. No.	Temp. Range	Surface Preparation	Primer	Finish Coat	Total DFT	Remarks
1	-14 to 80	SSPC-SP-10	Two coats P-6. 35 Microns. coat (Min.)	Two coats F- 6, 100 microns /coat (min.) and one coats F-2 40 Microns /coat (min.)	310	Primer and Finish coat application at Ambient temp.
2	81 to 400	SSPC-SP-I0	-	- Three coats F- 12, 20 Microns / coat (min.)	60	Paint application. at ambient temp, and curing at 250°C for 4 hours
3	401 to 550	SSPC-SP- 10	-	Three coats F- 12, 20 Microns / coat (min.	60	Paint application. at ambient temp, and curing at 250°C for 4 hours

Table – 18.5 : Painting System for External Side of Underground Tanks in all areas.

SI. No.	Temp. Range	Surface Preparation	Primer	Finish Coat	Total DFT	Remarks
External side of un-insulated underground storage tanks:						
1	-40 to 80	SSPC-SP-10	1 coat of F-9 @ 65-75μ DFT/ coat	3 coats of F-7 @ 100μ DFT/coat (3x100=300)	365-375	

18.2 Precautions to be taken

Neither the environment of the site nor the marking labels of devices may be covered with paint and they must be kept free of paint splashes. To this end, it is advisable to use removable masking tape.

Paint splashes, leaks, etc. on any adjacent installations such as measuring apparatus, valves, pipes. Sources of light, insulation, heat insulators, walls, concrete, etc, must immediately be wiped up and the damage repaired before the paint is dry.

Otherwise, the OWNER will be obliged to have the cleaning carried out at the expense of the Contractor. The paint recipient will only be opened at the time of use (unless otherwise specified by the manufacturer).

The product will be mixed in the recipient with the aid of suitable tools and thus homogenized.

18.3 Method of application

Normally, three methods of application will be used on the construction site for the paint products. i.e. with a brush, with a roller or with a spray gun.

- The brush method makes it possible to obtain good penetration of the paint over irregularities in the metal.
- Only this method will be used for application of the base coats, for retouching and for protrusions, welded areas, riveted joints or bolted joints:
- The roller method may be used on large flat surfaces for the intermediate and topcoats.
- The spray gun method must be used in accordance with the instructions of the manufacturer and carried out by qualified personnel.

The Contractor must guarantee that all safety measures have been taken for such work. The spray gun method may only he used on site for places that are difficult to reach with the brush. In this case, a request must be made to the OWNER/ OWNER's Representative for a deviation.

All paintwork will be carried out with good brushes or rollers that are suitable for the type of paint being used and for the form of the material to be painted and fitted with short handles. The maximum length of the brush and roller handles will be 50 cm; longer handles may only be used for places that are absolutely inaccessible. The maximum width of a brush will be 13 cm.

18.4 Application of the coating

Application of the paint will be carried out in accordance with best practice in order to obtain a homogeneous and continuous layer. The OWNER or the Approved Supervisory body demands that painting of a layer will only be started after acceptance by them of the surface preparation or of the previous layer of paint.

The layers of paint must have a uniform thickness. They must he spread in such a way that all concave parts are dried out and that the surface is completely covered and has a glossy appearance without leaving brush marks and without exhibiting bubbles, foam, wrinkles, drips, craters, skins or gums that arise from weathered paint,

Each layer must have the color stipulated in the tables of the present specifications, which clearly differs from the previous layer, taking account of the Color of the top layer, all of which for the purpose of being able to identify the number of coats and their order of sequence. If the color of the coats is not mentioned in the tables the color difference in consecutive coats must, if possible, he at least 100 RAL. The color of the top layer is given in the table.

The coating power should be such that the underlying layer is not visible. Only 1 layer per day may be applied, unless otherwise specified by the OWNER or the Approved Supervisory Body.

The drying times prescribed by the paint manufacturer must be strictly observed in relation to the environmental conditions before proceeding with the application of the next layer.

The dry coating thickness indicated in the description of the paint systems are minimum thickness. In this connection, the Contractor is obliged to contact the paint manufacturer and conform to his guidelines. The Contractor must respect the thickness specified by the supplier.

18.5 Transporting treated items

In the case of works being carried out in a workshop, the metal structures will be surrounded by ventilated contraction film that prevents damage during transportation. This film may only be applied after complete polymerization of the paint.

19.0 GROUND-LEVEL TRANSITION POINT

19.1 Polyester protection system

The Contractor will provide system 02 over the entire length of the pipes above ground and below ground and up to a height of 20 cm and a depth of 40 cm. perpendicular to the ground level mark. In each case, he must ensure that the jointing below the asphalt is in good condition and assures' faultless adhesion. He will apply the following products over the entire surface area, prepared in accordance with is Sa 3:

1) The primer of system 01.

2) Reinforced polyester ± 20 cm above the ground level marker and ± 5 cm on the asphalt cleaned beforehand (application of reinforced polyester is carried out in accordance with the work method prescribed by the manufacturer). Moreover, in the case of PE, in contrast to asphalt, he will apply a polygon primer to PE immediately before applying the reinforced polyester.

3) He will then apply the other coats of system 01a to the surface section and thus

cover the reinforced polyester with about 5 cm.

4) For new constructions, the polygon primer will be applied to PE and then subsequently processed as described under point 2.

20.0 USE OF SCAFFOLDING

Mounting, maintenance and dismantling of scaffolding for carrying out adaptation and/or paintwork to surface gas pipes or gas transport installations in use;

- The Contractor will specify the cost of scaffolding in the price list.
- The supplementary rental price for delays attributable to the Contractor will be charged to him:
- In his price quotation the Contractor should present the OWNER with diagrams of the scaffolding that he intends to install for carrying out the works of the OWNER.

21.0 QUALITY CONTROLS AND GUARANTEE

21.1 The Contractor is responsible for checking the weather conditions to ascertain whether the paintwork can be carried out within the technical specifications.

The Contractor should have the required calibrated monitoring apparatus for this purpose on site (with calibration certificates). The personnel who will have to use this apparatus should have the training for this purpose.

The OWNER or his representative and possibly the approved supervisory body indicated by the OWNER will maintain supervision during the works and inspect the works with random checks. A daily report will be drawn up in relation to the department that maintains supervision of these works.

The supplementary inspection and the supervision by the OWNER or the approved supervisory body do not diminish in any way the liability of the Contractor. The proper execution of the work and the materials used may be checked at any time.

21.2 Reference Surfaces

At the start of the works. The OWNER or the approved supervisory body will indicate a few surfaces that the Contractor will prepare and cover in accordance with the recognized method of operation under the inspection and to the satisfaction of all parties; the OWNER or his representative, the approved supervisory body, the contractor and possibly the paint manufacturer. These reference surfaces will serve as a point of comparison for the good adhesion of the paint on the installations as a whole. The parties will together work out a system for the identification of these surfaces in order to be able to monitor the conditions of the coatings over time. If the paintwork on a section of the installations

is in a worse condition than the reference surfaces, the Contractor may be obliged to treat these parts again.

21.3 Measures to be taken in the event of a dispute

If on delivery of the works no agreement can be reached between the Contractor and the OWNER regarding the conformity of the works to the requirements of these specifications, an Approved Supervisory Body will he Called in. The Approved Supervisory Body will then carry out inspections' on site whereby the following assessment criteria will be used:

- The Swedish standards ISO 8501-1 1988 SS 05.5900 concerning the degree of cleanliness of the areas derusted by blasting, by machine or by hand.

- The wet film thickness of the paint will be measured in accordance with ISO 2808 or ASTM DI 212;

- The dry layer thickness of the film will be measured electronically, will complete statistical information. in accordance will, ISO 2808 or ASTM D 1186.

- The thickness of each layer will be measured in accordance with ISO 2808. ASTM 4138 or DIN 50986.

- Adhesion tests will be carried out in accordance with ISO 2409. ASTM 3359 or DIN 53151.

- Traction tests will he carried out in conformity with ISO 4624 or ASTM D 4541.

- The rugosity will be measured electronically in accordance with DIN 4768;

- The non-porosity will be measured with a test tension depending on the type of coating, the layer thickness and after consultation with the Paint manufacturer.

- Any defects in the paint film may be inspected visually by means of a magnifying glass or microscope. If necessary a photographic report may be drawn up in accordance with ASTM Standard D 4121-82.

The final judgment of the Approved Supervisory Body is irrevocable and binding for the Contractor and the OWNER. In the event of non-conformity of the works with the criteria of these specifications, all costs arising from the inspection by the Approved Supervisory Body shall be borne by the Contractor.

21.4 Guarantee

a) General Principles

The Contractor declares that he is aware of:

- The maximum operating temperature of the surfaces to be covered.
- The maximum permitted degree of humidity of the bearing surface.

- The properties of the environment to which the surfaces to be covered are: subject.

b) Summary of the Guarantee.

The contractor fully guarantees the following without reservation:

- The observance of all stipulations of the specifications for paintwork regarding, among other things:
  - The preparation of the surfaces.
  - The thickness of each layer.
  - The total thickness of the covering.
- The uniformity of the materials used.
- The repair of all defects before delivery of the works.

The Contractor will carry out the requested repair work as promptly as possible.

ENERGISING QUALITY

VCS QUALITY SERVICES PVT. LTD.

INSPECTION AND TEST PLAN
FOR
BALL VALVE
VCS – ITP – PP – 2007

04	**27/05/2022**	**SR**	**MC**	**HK**	**HK**
Rev. No	**Date**	**Prepared By**	**Checked By**	**Approved By**	**Authorized By**

UNCONTROLLED COPY	:	**If printed**
CONTROLLED COPY	:	**If in soft and signed**

REVISION RECORD						
Rev.	**Revision Date**	**Prepared by**	**Checked by**	**Approved by**	**Authorized by**	**Revision Description**
00	16/06/2017					
		GS	ADE	AD	SK	
01	20/01/2020					Formatting update, Doc Numbering change from VCS-SD-ITP-007 to VPC-ITP-PP-2007
		AG	MC	AD	SK	
02	19/05/2020					Revised as Marked
		AG	MC	AD	SK	
03	19/12/2021					Revised as Marked
		SR	MC	HK	HK	
04	27/05/2022					Revised as Marked
		SR	MC	HK	HK	

ABBREVIATIONS:			
CE	Carbon Equivalent	NDT	Non-Destructive Testing
DCN	Dispatch Clearance Note	PO	Purchase Order
DFT	Dry Film Thickness	PQR	Procedure Qualification Record
DPT	Dye Penetrant Testing	PR	Purchase Requisition
HT	Heat Treatment	RT	Radiography Testing
ITP	Inspection and Test Plan	TC	Test Certificate
IC	Inspection Certificate	TPI or TPIA	Third Party Inspection Agency
IGC	Inter Granular Corrosion	UT	Ultrasonic Testing
IR	Inspection Report	VDR	Vendor Data Requirement
IRC	Inspection Release Certificate	WPQ	Welders Performance Qualification
MPT / MT	Magnetic Particle Testing	WPS	Welding Procedure Specification
MTC	Material Test Certificate		
LEGENDS:			
H - Hold (Do not proceed without approval)			
W – Witness (Give due notice, work may proceed after scheduled date)			
P - Perform			

R - Review
RW - Random Witness [As specified or 10% (min.1 no. of each size and type of Bulk items)]

1.0 SCOPE:

This Inspection and Test Plan covers the minimum testing requirements of Ball Valves.

2.0 REFERENCE DOCUMENTS:

PO / PR / Standards referred there in / Job specifications / Approved documents.

3.0 INSPECTION AND TEST REQUIREMENTS:

SL. NO.	COMPONENT & OPERATION	CHARACTERISTICS / METHOD OF CHECK	QUANTUM OF CHECK	REFERENCE DOCUMENT & ACCEPTENCE CRITERIA	FORMAT OF RECORD	SCOPE OF INSPECTION		
						SUB VENDOR	VENDOR	TPIA
1.0	**PROCEDURES**							
1.1	Hydrostatic Test, NDT and Other Procedures	Documented Procedures	100%		Procedure Documents	-	H	R
1.2	WPS,PQR & WPQ	Welding Parameters & Qualification Record	100%		WPS ,PQR & WPQ	-	H	W- New R- Existing
1.3	Pre-Qualification Tests	Fire safe, Cryogenic & Other Test as applicable	As per PR/Purchase Specification		Acceptance Report	-	H	H (If new)
2.0	**RAW MATERIAL**							
2.1	Forging / Casting: 1) Body 2) End Piece 3) Ball	Visual & Dimension	100%	Material & Technical Specification	Inspection Report	H	H	-
		Chemical: Chemical Analysis IGC (For SS component)	All Heats	Material & Technical Specification	Vendor Test Certificate	H	R	R

SL. NO.	COMPONENT & OPERATION	CHARACTERISTICS / METHOD OF CHECK	QUANTUM OF CHECK	REFERENCE DOCUMENT & ACCEPTENCE CRITERIA	FORMAT OF RECORD	SCOPE OF INSPECTION		
						SUB VENDOR	VENDOR	TPIA
	4) Seat Ring 5) Pup Piece (as applicable)	Mechanical: Mechanical Test	All Heats	Material & Technical Specification	Vendor Test Certificate	H	R	W (Note-1)
		Impact Test (@ - 29°C): for CS Impact Test (@ - 45°C): for LTCS	All Heats	Material & Technical Specification / ASME B 16.34	Test Report	H	R	W (Note-1)
		Non-Destructive Examination (NDT): Radiography (100% Critical Area)	100%	Material & Technical Specification /ASME B 16.34	RT Report	H	R (RT-Film review)	R (RT-Film review)
		Non-Destructive Examination (NDT): Magnetic Particle Examination (100% exterior & accessible interior)	100%	Material & Technical Specification /ASME B 16.34	MPI Report	H	R	R
		ENP (For Ball): Visual, Thickness & Hardness	100%	25 microns (min) & 50 HRC (min)	Vendor Test Certificate	H	R	R
3.0	**INCOMING / BOF ITEMS**							
3.1	Stem	Chemical: Chemical Analysis	All Heats	Material & Technical Specification	Vendor Test Certificate	H	R	R
		Mechanical: Mechanical Test	All Heats	Material & Technical Specification	Vendor Test Certificate	H	R	R
3.2	Fasteners	Chemical: Chemical Analysis	All Heats	Material & Technical Specification	Vendor Test Certificate	H	R	R
		Mechanical: Mechanical Test	All Heats	Material & Technical Specification	Vendor Test Certificate	H	R	R
		Impact Test (@ - 29°C): for CS Impact Test (@ - 45°C): for LTCS	All Heats	Material & Technical Specification	Test Report	H	R	R

SL. NO.	COMPONENT & OPERATION	CHARACTERISTICS / METHOD OF CHECK	QUANTUM OF CHECK	REFERENCE DOCUMENT & ACCEPTENCE CRITERIA	FORMAT OF RECORD	SCOPE OF INSPECTION		
						SUB VENDOR	VENDOR	TPIA
				/ASME B 16.34				
3.3	Gaskets, Gear units, Gland, Packings, etc.	Physical / Chemical Properties	100%	Material & Technical Specification	Test Certificates& Lab Report	H	R	R
4.0	**MACHINED COMPONENTS**							
4.1	Body, Connector, Ball & Seat Ring	Surface examination & Dimension Inspection: Visual & Measurement	100%	Manufacturer's Drawing	Inspection Reports	100%	R	R
5.0	**IN-PROCESS**							
5.1	Body & Connector joint welding	Non-Destructive Examination (NDT): Magnetic Particle Examination (MPI)	100%	ASME Sec VIII - Appendix V & VI	MPI Report	100%	R	R
5.2	Valve & Pup Piece Bevel Ends joint welding	Non-Destructive Examination (NDT): Radiography (100% on weld joint)	100%	ASME B16.34	RT Report	100%	R (RT-Film review)	R (RT-Film review)
6.0	**FINAL INSPECTION**							
6.1	Finished Valve Assembly: Pressure Test & Final Inspection	Shell Test: Hydrostatic	100%	Testing Procedure as per Code	Test Record	-	H	RW
6.2		Seat Test: Hydrostatic				-	H	RW
6.3		Seat Test: Pneumatic				-	H	RW
6.4		Functional Test - Actuated Valve @ Atm. Pressure & Max. Diff. Pressure: Operation- Open / Close				-	H	RW
6.5		Double Block & Bleed: Hydrostatic				-	H	RW
6.6		Final Inspection: Visual, Dimension, TC Verification, Special Requirements & Marking	100%	Approved GA Drawing (if applicable)	Test Report	-	H	RW

SL. NO.	COMPONENT & OPERATION	CHARACTERISTICS / METHOD OF CHECK	QUANTUM OF CHECK	REFERENCE DOCUMENT & ACCEPTENCE CRITERIA	FORMAT OF RECORD	SCOPE OF INSPECTION		
						SUB VENDOR	VENDOR	TPIA
		as per sale order						
6.7		Anti-Static Test	100%	API 6D & Technical Specification	Test Record	-	H	RW
6.8		Fire Safe Test	100%	API-6FA / ISO-10497	Fire safe type test report	-	H	R
6.9	Final Stamping	Stamping Of Accepted Valves	Stamping of Valves which are witnessed by VCS/TPIA	As per Tender Specification	Inspection Report	-	H	H
6.10	Strip Test	Component integrity, PMI of BOM	One per size per rating	-	Test report	H	H	H
7.0	**PAINTING & PACKING**	Surface examination & DFT Inspection: Visual & Measurement	100%	As per Tender Specification	Painting Record	-	H	R
8.0	**DOCUMENTATION & INSPECTION CERTIFICATE(IC)**	Review of Stage Inspection Reports / Test Reports & Issue of IC	100%	As per Tender Specification	Vendor TC & IC	-	H	H
9.0	**FINAL DOCUMENTATION & SUBMISSION OF REPORTS**	Compilation of IR/IRC/DCN/MTC/DRGS./VDR	100%	EN 10204 type 3.2/3.1 certification as specified in valve datasheet (Note-1)	Compliance Certificate	-	H	-

NOTES (As applicable):

1. If the certification is specified as EN 10204 Type 3.1 in Data sheet / Material Requisition, then '**W**' may be replaced with '**R**' with Material Traceability.

2. ITP shall be submitted including but not limited to the item/activity covered above. Any item/activity identified and required for the completeness shall also be covered in the ITP submitted by the manufacturers.

ENERGISING QUALITY

VCS QUALITY SERVICES PVT. LTD.

INSPECTION AND TEST PLAN
FOR
PLUG VALVES
VPC – ITP – PP – 2009

00	27/04/2022	SR	MC	HK	HK
Rev. No	**Date**	**Prepared By**	**Checked By**	**Approved By**	**Authorized By**

UNCONTROLLED COPY	:	If printed
CONTROLLED COPY	:	If in soft and signed

REVISION RECORD						
Rev.	**Revision Date**	**Prepared by**	**Checked by**	**Approved by**	**Authorized by**	**Revision Description**
00	27/04/2022					Issued as standard ITP
		SR	MC	HK	HK	

ABBREVIATIONS:			
CE	Carbon Equivalent	NDT	Non Destructive Testing
DCN	Dispatch Clearance Note	PO	Purchase Order
DFT	Dry Film Thickness	PQR	Procedure Qualification Record
DPT	Dye Penetrant Testing	PR	Purchase Requisition
HT	Heat Treatment	RT	Radiography Testing
IC	Inspection Certificate	TC	Test Certificate
IR	Inspection Report	TPI or TPIA	Third Party Inspection Agency
IRC	Inspection Release Certificate	UT	Ultrasonic Testing
ITP	Inspection and Test Plan	VDR	Vendor Data Requirement
MPT/MT	Magnetic Particle Testing	WPQ	Welders Performance Qualification
MTC	Material Test Certificate	WPS	Welding Procedure Specification

LEGENDS:
H - Hold (Do not proceed without approval)
W - Witness (Give due notice, work may proceed after scheduled date)
P - Perform
R - Review
RW - Random Witness [As specified or 10% (min.1 no. of each size and type of Bulk items)]

1.0 SCOPE:

This Inspection and Test Plan covers the minimum testing requirements of Valves.

2.0 REFERENCE DOCUMENTS:

PO / PR / Standards referred there in / Job specifications / Approved documents.

3.0 INSPECTION AND TEST REQUIREMENTS:

SL.NO.	STAGE/ACTIVITY	CHARACTERISTICS	QUANTUM OF CHECK	RECORD	SCOPE OF INSPECTION		
					SUB VENDOR	VENDOR	TPIA
1.0	**Procedure**						
1.1	Hydrostatic Test, NDT and Other Procedures	Documented Procedures	100%	Procedure Documents	-	H	R
1.2	WPS,PQR & WPQ	Welding Parameters & Qualification Record	100%	WPS ,PQR & WPQ	-	H	W- New R- Existing

SL.NO.	STAGE/ACTIVITY	CHARACTERISTICS	QUANTUM OF CHECK	RECORD	SCOPE OF INSPECTION		
					SUB VENDOR	VENDOR	TPIA
2.0	**Material Inspection**						
2.1	Castings & Forgings (Body, Cover, Plug, Stem)	Chemical ,Mechanical , Heat Treatment, NDT & Other Properties as applicable	100%	Test Certificates	H	R	W (Note-1)
2.2	Castings & Forgings (Body, Cover, Plug, Stem)	Visual & Dimension	100%	Inspection Report	H	H	-
2.3	Body, Cover and Plug Castings	Radiography Examination	As per PR / Purchase Specification	Films and report	H	R (RT-Film review)	R (RT-Film review) (Note-1)
2.4	Bars for Trim material	Chemical Analysis	Each Heat	Test Certificates& Lab Report	H	R	R
2.5	Gaskets, Gear units, Fasteners, Gland, Packings, etc.	Physical / Chemical Properties	100%	Test Certificates& Lab Report	H	R	R

SL.NO.	STAGE/ACTIVITY	CHARACTERISTICS	QUANTUM OF CHECK	RECORD	SCOPE OF INSPECTION		
					SUB VENDOR	VENDOR	TPIA
2.6	Actuators as applicable	Performance , Statutory Certificates as applicable	100%	Test Certificates& Lab Report	H	H	R
3.0	**In Process Inspection**						
3.1	Welding	Welding Parameters as per WPS / PQR	100%	Inspection Reports	-	H	R
3.2	Machining of components	Visual / Dimension	100%	Inspection Reports	-	H	-
4.0	**Final Inspection**						
4.1	Hydrostatic / Pneumatic Test	Hydrostatic Test – Shell Pneumatic Test – Seat	As per PR / Purchase Specification	Test Report	-	H	RW
4.2	Visual / Dimension	Surface & Dimension Check	100%	Test Report	-	H	RW
4.3	Final Stamping	Stamping Of Accepted Valves	Stamping of Valves which are witnessed by TPIA.	Inspection Report	-	H	H

SL.NO.	STAGE/ACTIVITY	CHARACTERISTICS	QUANTUM OF CHECK	RECORD	SCOPE OF INSPECTION		
					SUB VENDOR	VENDOR	TPIA
4.4	Strip Test	Component integrity, PMI of BOM	One per size per rating	Test report	H	H	H
5.0	**Painting**						
5.1	Painting and Colour coding as applicable	Visual / DFT Check	100%	Inspection Report	-	H	R
6.0	**Documentation & IC**						
6.1	Documentation & Inspection Certificate(IC)	Review of Stage Inspection Reports / Test Reports & Issue of IC	100%	Vendor TC & IC	-	H	H
7.0	**Final Documentation & Submission of Reports**	Compilation of IR/IRC/DCN/MTC/DRGS./VDR	100%	Compliance Certificate (Note-1)	-	H	-

NOTES (As applicable):

1. If the certification is specified as EN 10204 Type 3.1 in Data sheet / Material Requisition, then '**W**' may be replaced with '**R**' with Material Traceability.

2. ITP shall be submitted including but not limited to the item/activity covered above. Any item/activity identified and required for the completeness shall also be covered in the ITP submitted by the manufacturers.

ENERGISING QUALITY

VCS QUALITY SERVICES PVT. LTD.

INSPECTION AND TEST PLAN
FOR
GATE/GLOBE/CHECK VALVES
VCS – ITP – PP – 2008

02	27/05/2022	SR	MC	HK	HK
Rev. No	**Date**	**Prepared By**	**Checked By**	**Approved By**	**Authorized By**

UNCONTROLLED COPY	:	If printed
CONTROLLED COPY	:	If in soft and signed

REVISION RECORD

Rev.	Revision Date	Prepared by	Checked by	Approved by	Authorized by	Revision Description
00	22/04/2020					Revised as Marked
		MB	MC	AD	SK	
01	19/12/2021					Revised as Marked
		SR	MC	HK	HK	
02	27/05/2022					Revised as Marked
		SR	MC	HK	HK	

ABBREVIATIONS:			
CE	Carbon Equivalent	NDT	Non Destructive Testing
DCN	Dispatch Clearance Note	PO	Purchase Order
DFT	Dry Film Thickness	PQR	Procedure Qualification Record
DPT	Dye Penetrant Testing	PR	Purchase Requisition
HT	Heat Treatment	RT	Radiography Testing
IC	Inspection Certificate	TC	Test Certificate
IR	Inspection Report	TPI or TPIA	Third Party Inspection Agency
IRC	Inspection Release Certificate	UT	Ultrasonic Testing
ITP	Inspection and Test Plan	VDR	Vendor Data Requirement
MPT/MT	Magnetic Particle Testing	WPQ	Welders Performance Qualification
MTC	Material Test Certificate	WPS	Welding Procedure Specification

LEGENDS:
H - Hold (Do not proceed without approval)
W - Witness (Give due notice, work may proceed after scheduled date)
P - Perform
R - Review
RW - Random Witness [As specified or 10% (min.1 no. of each size and type of Bulk items)]

1.0 SCOPE:

This Inspection and Test Plan covers the minimum testing requirements of Valves.

2.0 REFERENCE DOCUMENTS:

PO / PR / Standards referred there in / Job specifications / Approved documents.

3.0 INSPECTION AND TEST REQUIREMENTS:

SL.NO.	STAGE/ACTIVITY	CHARACTERISTICS	QUANTUM OF CHECK	RECORD	SCOPE OF INSPECTION		
					SUB VENDOR	VENDOR	TPIA
1.0	**Procedure**						
1.1	Hydrostatic Test, NDT and Other Procedures	Documented Procedures	100%	Procedure Documents	-	H	R
1.2	WPS,PQR & WPQ	Welding Parameters & Qualification Record	100%	WPS ,PQR & WPQ	-	H	W- New R- Existing

SL.NO.	STAGE/ACTIVITY	CHARACTERISTICS	QUANTUM OF CHECK	RECORD	SCOPE OF INSPECTION		
					SUB VENDOR	VENDOR	TPIA
2.0	**Material Inspection**						
2.1	Castings & Forgings (Body, Bonnet, Disc, Stem, Body ring)	Chemical ,Mechanical , Heat Treatment, NDT & Other Properties as applicable	100%	Test Certificates	H	R	W (Note-1)
2.2	Castings & Forgings (Body, Bonnet, Disc, Stem, Body ring)	Visual & Dimension	100%	Inspection Report	H	H	-
2.3	Body and Bonnet Castings	Radiography Examination	As per PR / Purchase Specification	Films and report	H	R (RT-Film review)	R (RT-Film review) (Note-1)
2.4	Bars for Trim material	Chemical Analysis	Each Heat	Test Certificates& Lab Report	H	R	R
2.5	Gaskets, Gear units, Fasteners, Gland, Packings, etc.	Physical / Chemical Properties	100%	Test Certificates& Lab Report	H	R	R

SL.NO.	STAGE/ACTIVITY	CHARACTERISTICS	QUANTUM OF CHECK	RECORD	SCOPE OF INSPECTION		
					SUB VENDOR	VENDOR	TPIA
2.6	Actuators as applicable	Performance , Statutory Certificates as applicable	100%	Test Certificates& Lab Report	H	H	R
3.0	**In Process Inspection**						
3.1	Welding	Welding Parameters as per WPS / PQR	100%	Inspection Reports	-	H	R
3.2	Machining of components	Visual / Dimension	100%	Inspection Reports	-	H	-
4.0	**Final Inspection**						
4.1	Hydrostatic / Pneumatic Test	Hydrostatic Test – Shell Pneumatic Test – Seat & Back Seat	As per PR / Purchase Specification	Test Report	-	H	RW
4.2	Visual / Dimension	Surface & Dimension Check	100%	Test Report	-	H	RW
4.3	Final Stamping	Stamping Of Accepted Valves	Stamping of Valves which are witnessed by TPIA.	Inspection Report	-	H	H

SL.NO.	STAGE/ACTIVITY	CHARACTERISTICS	QUANTUM OF CHECK	RECORD	SCOPE OF INSPECTION		
					SUB VENDOR	VENDOR	TPIA
4.4	Strip Test	Component integrity, PMI of BOM	One per size per rating	Test report	H	H	H
5.0	**Painting**						
5.1	Painting and Colour coding as applicable	Visual / DFT Check	100%	Inspection Report	-	H	R
6.0	**Documentation & IC**						
6.1	Documentation & Inspection Certificate(IC)	Review of Stage Inspection Reports / Test Reports & Issue of IC	100%	Vendor TC & IC	-	H	H
7.0	**Final Documentation & Submission of Reports**	Compilation of IR/IRC/DCN/MTC/DRGS./VDR	100%	Compliance Certificate (Note-1)	-	H	-

NOTES (As applicable):

1. If the certification is specified as EN 10204 Type 3.1 in Data sheet / Material Requisition, then '**W**' may be replaced with '**R**' with Material Traceability.

2. ITP shall be submitted including but not limited to the item/activity covered above. Any item/activity identified and required for the completeness shall also be covered in the ITP submitted by the manufacturers.

Energising Quality	**PROJECT NUMBER: C221052**	IGGL

ITP for instrument items			Total Sheets		4
Document No	C221052	00	IN	ITP	5004

Indradhanush Gas Grid Limited

NORTH EAST GAS GRID LIMITED PHASE-III OF IGGL

DIMAPUR-KOHIMA-IMPHAL PIPELINE SECTION(DIPL)

SILIGURI-GANGTOK PIPELINE SECTION(SGPL)

			VK	SV	KNC
B1	04.05.2022	Issued for IDC	VK	SV	KNC
A1	02.05.2022	Issued for Internal Review	VK	SV	KNC
REV	**DATE**	**DESCRIPTION**	**PREP**	**CHKD**	**APPR**

Sr. No.	Components / Operation	Characteristics	Class	Type of check	Quantum of check		Reference Document	Acceptance Norm	Format of Record	Agency		Remark
					1	2				1	2	
1	**RAW MATERIALS**											
A.	**ACTUATOR**											
1.1	CENTRAL BLOCK	Material Composition Check	Major	Chemical & Mechanical Analysis(as applicable)	1/Lot	- - -	As per IS 1865/ IS 1803	As per IS 1865/ IS 1803	Manufacturer's TC	P	R	
1.2	CENTRAL BLOCK COVER	Material Composition Check	Major	Chemical & Mechanical Analysis(as applicable)	1/Lot	- - -	As per IS 1865/ IS 1803	As per IS 1865/ IS 1803	Manufacturer's TC	P	R	
1.3	YOKE	Material Composition Check	Major	Chemical & Mechanical Analysis(as applicable)	1/Lot	- - -	As per IS 1865/ IS 1803	As per IS 1865/ IS 1803	Manufacturer's TC	P	R	
1.4	CARRIER	Material Composition Check	Major	Chemical & Mechanical Analysis(as applicable)	1/Lot	- - -	As per IS 1865/ IS 1803	As per IS 1865/ IS 1803	Manufacturer's TC	P	R	
2	**MANUFACTURED ITEMS**											
2.1	ACTUATOR	Hydrualic check	Major	Leakage check	100 %	- - -	As per manufacturer	No leakage	Test Report	P	R	
2.2	LIMIT SWITCH	Model & Functional check	Major	Physical & Electrical	100 %	- - -	As per Specification / Catalogue	As per Specification / Catalogue	IR	P	R	CCOE/ATEX Certificate (As Applicable)
3	**BOUGHT OUT ITEMS**											
3.1	Tanks (Gas & Oil + Gas)	Material Composition	Major	Chemical & Mechanical	1/Lot	1/Lot	ASME Section II Part A -	ASME Section II Part A -	Mill TC / MTC / Lab Report	P	W	

		Check for Pipe & Plate (Raw material)		Analysis			2015 EDN./ IS Material Specification	2015 EDN./ IS Material Specification				
		LPT of CS Weld Joints	Major	Visual & LPT Check	100 %	100 %	Design code i.e. ASME SEC VIII DIV.1 / Procedure / Drawing	Design code i.e. ASME SEC VIII DIV.1 / Procedure / Drawing	LPT Report	P	W	
		Hydro test of Tank	Major	Leakage	100 %	100 %	As per Drawing/ Code	As per Drawing/ Code	Inspection report	P	W	
3.2.	SOLENOID VALVE	Type of Valve	Major	Mechanical & Electrical tests	100 %	- - -	As per Approved GAD /Datasheet	As per Approved GAD /Datasheet	Manufacturer's TC	P	R	CCOE/ATEX Certificate (As Applicable)
3.3	D.P.SWITCH	Type of switch	Major	Electrical Test	1000 %	- - -	Manufacturer's Specification	Manufacturer's Specification	Compliance Certificate / Manufacturer's TC	P	R	
3.4	PRESSURE REGULATOR	Functional check	Major	Physical	100 %	- - -	Manufacturer's Specification	Manufacturer's Specification	Compliance Certificate / Manufacturer's TC	P	R	
3.5	JUNCTION BOX	Functional check	Minor	Visual & Electrical Check	100 %	- - -	Manufacturer Specification / Data Sheet	Manufacturer Specification / Data Sheet	CCOE/CMRI certificate	P	R	

3.6	PRESSURE RELIEF VALVE	Functional check	Minor	Operating pressure	100 %	- - -	Manufacturer Specification / Data Sheet	Manufacturer Specification / Data Sheet	CCOE/CMRI certificate	P	R	
4	**FINAL INSPECTION**											
4.1	FINAL INSPECTION	1a) Functional/Performance Test	Major	ON/OFF Operation	100%	10% of each size	As per Approved GA Drawing & Datasheet	As per Approved GA Drawing & Datasheet	IR	P	W	Final Inspection & Documentation review by TPIA
		1b) Limiting device Operation		Fail Safe Condition								
		1c) Operating Time		Opening / Closing Time								
		2. Pressure tightness – Cylinder Joints, Fittings & Tubing	Major	Leakage (Pneumatic/Hydraulic)	100 %	10% of each size	As per Approved GA Drawing & Datasheet	As per Approved GA Drawing & Datasheet	IR	P	W	
		3. Visual Inspection	Minor	Name Plate/BOM Verification/ Tag Verification (If Any)	100 %	10% of each size	As per Approved GA Drawing	As per Approved GA Drawing	TC	P	W	
		4. Painting Inspection	Major	Paint / DFT	100 %	- - -	As Per Painting Specification VPC – SS – PI - 008	As Per Painting Specification VPC – SS – PI - 008	Paint Compliance Report	P	R	For Actuator

ENERGISING QUALITY

VCS QUALITY SERVICES PVT. LTD.

STANDARD SPECIFICATION
FOR
QUALITY MANAGEMENT SYSTEM
REQUIREMENT FROM VENDORS

VPC – SS – PP - 2044

00	**20.07.2020**	**MB**	**MC**	**AD**	**SK**
Rev. No	**Date**	**Prepared By**	**Checked By**	**Approved By**	**Authorized By**

UNCONTROLLED COPY	:	**If printed**
CONTROLLED COPY	:	**If in soft and signed**

REVISION RECORD						
Rev.	**Revision Date**	**Prepared by**	**Checked by**	**Approved by**	**Authorized by**	**Revision Description**
00	20.07.2020					
		MB	MC	AD	SK	

Abbreviations:

CV	:	Curriculum Vitae
ISO	:	International Organization for Standardization
MR	:	Material Requisition
PO	:	Purchase Order
PR	:	Purchase Requisition
QA	:	Quality Assurance
QMS	:	Quality Management System

CONTENTS

1.0 SCOPE 4
2.0 DEFINITIONS 4
3.0 REFERENCE DOCUMENTS 4
4.0 QUALITY MANAGEMENT SYSTEM - GENERAL 4
5.0 QUALITY SYSTEM REQUIREMENTS 4
6.0 AUDITS 6
7.0 DOCUMENTATION REQUIREMENTS 7

1.0 SCOPE

This specification establishes the Quality Management System requirements to be met by BIDDER for following purpose:

- QMS requirements to be met by suppliers/contractors after award of work/ during contract execution.

2.0 DEFINITIONS

2.1 Bidder

For the purpose of this specification, the word "BIDDER" means the person(s), firm, company or organization who is under the process of being contracted by Owner for delivery of some products (including service). The word is considered synonymous to supplier, contractor or vendor.

2.2 Project Quality Plan

Document tailored from Standard Quality Management System Manual of BIDDER, specifying how the quality requirements of the project will be met.

2.3 Owner

Owner means the owner of the project for which services / products are being purchased and includes their representatives, successors and assignees.

3.0 REFERENCE DOCUMENTS

VPC-SS-PP-2043 Standard Specification for Documentation Requirements from Suppliers

4.0 QUALITY MANAGEMENT SYSTEM — GENERAL

Unless otherwise agreed with PMC / Owner, the BIDDER proposed quality system shall fully satisfy all relevant requirements of ISO 9001 "Quality Management Systems - Requirements." Evidence of compliance shall be current certificate of quality system registration to ISO 9001 or a recent compliance audit recommending registration from a certification agency. The quality system shall provide the planned and systematic control of all quality related activities for execution of contract. Implementation of the system shall be in accordance with BIDDER'S Quality Manual and PROJECT specific Quality Plan.

5.0 QUALITY SYSTEM REQUIREMENTS

5.1 BIDDER shall prepare and submit for review / record, Project Quality Plan / Quality Assurance Plan for contracted scope / job. The BIDDER'S Quality Plan shall address all of the applicable elements of ISO 9001, identify responsible parties within BIDDER'S organization, for the implementation / control of each area, reference the applicable procedures used to control / assure each area, and verify the documents produced for

each area. The Project Quality Plan shall necessarily define control or make reference to the relevant procedures, for design and engineering, purchase, documentation, record control, bid evaluation, inspection, production/manufacturing, preservation, packaging and storage, quality control at construction site, pre-commissioning, commissioning and handing over (as applicable) in line with contract requirement and scope of work.

5.2 BIDDER shall identify all specified or implied statutory and regulatory requirements and communicate the same to all concerned in his organization and his sub contractor's organization for compliance.

5.3 BIDDER shall deploy competent and trained personnel for various activities for fulfilment of PO / contract. BIDDER shall arrange adequate infrastructure and work environment to ensure that the specification and quality of the deliverable are maintained.

5.4 BIDDER shall do the quality planning for all activities involved in delivery of order. The quality planning shall cover as minimum the following:

- Resources
- Product / deliverable characteristics to be controlled.
- Process characteristics to ensure the identified product characteristics are realized
- Identification of any measurement requirements, acceptance criteria
- Records to be generated
- Need for any documented procedure

The quality planning shall result into the quality assurance plan, inspection and test plans (ITPs) and job procedures for the project activities in the scope of bidder.

These documents shall be submitted to PMC/Owner for review/approval, before commencement of work.

5.5 Requirements for sub-contracting / purchasing of services specified in contract / tender shall be adhered to. In general, all outsourced items will be from approved vendors of OWNER. Wherever requirements are not specified, or approved sub vendors do not exist, the sub-contractor shall establish and maintain a system for purchasing / sub-contracting to ensure that purchased product / service conforms to specified requirements. Criteria for selection of sub-contractor, evaluation, re-evaluation, maintenance of purchasing data and verification of purchased product (subcontractor services), constitute important components of this requirement.

5.6 BIDDER shall plan and carry production and service provision under controlled conditions. Controlled conditions shall include, as applicable the availability of information that describes the characteristics of the product the availability of work instructions the use of suitable equipment the availability and use of monitoring and measuring devices the implementation of monitoring and measurement the implementation of release, delivery and post-delivery activities.

5.7 BIDDER shall validate any processes for production and service provision where resulting output cannot be verified by subsequent monitoring and measurement. This includes any process where deficiencies become apparent only after the product is in use or service has been delivered.

5.8 BIDDER shall establish a system for identification and traceability of product /deliverable throughout product realization. Product status with respect to inspection and testing requirements shall be identified.

5.9 BIDDER shall identify, verify, protect and safeguard PMC / Owner property (material / document) provided for use or incorporation into the product. If any OWNER/ PMC property is lost, damaged or otherwise found to be unsuitable for use, this shall be reported to the OWNER/ PMC.

5.10 BIDDER shall ensure the conformity of product / deliverable during internal processing and delivery to the intended destination. Requirements mentioned in the tender shall be adhered to.

5.11 BIDDER shall establish system to ensure that inspection and testing activities are carried out in line with requirements. Where necessary, measuring equipment's shall be calibrated at specified frequency, against national or international measurement standards; where no such standard exists, the basis used for calibration shall be recorded. The measuring equipment's shall be protected from damage during handling, maintenance and storage.

5.12 BIDDER shall ensure effective monitoring, using suitable methods, of the processes involved in production and other related processes for delivery of the scope of contract.

5.13 BIDDER shall monitor and measure the characteristics of the product/deliverable to verify that product requirement has been met. The inspection (stage as well as final) by BIDDER and OWNER / Owner personnel shall be carried out strictly as per the ITPs forming part of the contract. Product release or service delivery shall not proceed until the planned arrangements have been satisfactorily completed, unless otherwise approved by relevant authority and where applicable by Owner / PMC.

5.14 BIDDER shall establish and maintain a documented procedure to ensure that the product which does not conform to requirements is identified and controlled to prevent its unintended use or delivery.

5.15 All non-conformities (NCs) / deficiencies found by the BIDDER'S inspection /surveillance staff shall be duly recorded, including their disposal action shall be recorded and resolved suitably. Effective corrective and preventive action shall be implemented by the BIDDER so that similar NCs including deficiencies do not recur.

5.16 All deficiencies noticed and reported by PMC / OWNER shall be analysed by the BIDDER and appropriate corrective and preventive actions shall be implemented. BIDDER shall intimate PMC / OWNER of all such corrective and preventive action implemented by him.

5.17 BIDDER should follow the standards, specifications and approved drawings. Concessions/Deviations shall be allowed only in case of unavoidable circumstances. In such situations Concession/deviation request must be made by the BIDDER through online system of OWNER/ PMCs eDMS.

5.18 BIDDER shall have documented procedure for control of documents.

5.19 All project records shall be carefully kept, maintained and protected for any damage or loss until the project completion, then handed over to PMC / Owner as per contract requirement (VPC-SS-PL-0047 Specification for Documentation Requirements from Suppliers), or disposed as per relevant project procedure.

6.0 AUDITS

BIDDER shall plan and carry out the QMS audit for the job. Quality audit programme shall cover design, procurement, construction management and commissioning as applicable including activities carried out by sub-vendors and sub-contractors. This shall be additional to the certification body surveillance audits carried out under BIDDER'S own ISO 9001 certification scheme.

The audit programmes and audit reports shall be available with bidder for scrutiny by PMC / OWNER. PMC or OWNER representative reserves the right to attend, as a witness, any audit conducted during the execution of the WORKS.

In addition to above OWNER, PMC and third party appointed by PMC/Owner may also perform Quality and Technical compliance audits. BIDDER shall provide assistance and access to their systems and sub-contractor / vendor systems as required for this purpose. Any deficiencies noted shall be immediately rectified by BIDDER.

7.0 DOCUMENTATION REQUIREMENTS

BIDDER shall submit following QMS documents immediately after award of work (Within one week) for record / review by PMC/ Owner.

- Organization chart (for complete organization structure and for the project)
- Project Quality Plan/Quality Assurance Plan
- Job specific Inspection Test Plans, if not attached with PR
- Job Procedures
- Inspection/Test Formats

In addition to above QMS documents, following documentation shall be maintained by the BIDDER for submission to PMC / Owner on demand at any point of time during execution of the project.

- Quality Manual
- Certificate of approval for compliance to ISO: 9001 standards
- Procedure for Control of Non-conforming Product

- Procedure for Control of Documents
- Sample audit report of the QMS internal and external audits conducted during last one year
- Customer satisfaction reports from at least 2 customers, during the last one year
- Project QMS audit report
- Technical audit reports for the project
- Corrective action report on the audits

Documents as specified above are minimum requirements. BIDDER shall submit any other document/data required for completion of the job as per PMC/Owner instructions.

ENERGISING QUALITY

VCS QUALITY SERVICES PVT. LTD.

STANDARD SPECIFICATION

FOR

DOCUMENTATION REQUIREMENTS

FROM SUPPLIERS

VPC – SS – PP - 2043

00	**20.07.2020**	**MB**	**MC**	**AD**	**SK**
Rev. No	**Date**	**Prepared By**	**Checked By**	**Approved By**	**Authorized By**

UNCONTROLLED COPY	:	**If printed**
CONTROLLED COPY	:	**If in soft and signed**

REVISION RECORD						
Rev.	**Revision Date**	**Prepared by**	**Checked by**	**Approved by**	**Authorized by**	**Revision Description**
00	20.07.2020					
		MB	MC	AD	SK	

Abbreviations:

DCI	:	Document Control Index
edms	:	Electronic Document Management System
FOA	:	Fax of Acceptance
HOD	:	Head of Division / Department
IC	:	Inspection Certificate
IRN	:	Inspection Release Note
ITP	:	Inspection and Test Plan
LOA	:	Letter of Acceptance
MOU	:	Memorandum of Understanding
MR	:	Material Requisition
PO	:	Purchase Order
PR	:	Purchase Requisition
PVC	:	Polyvinyl Chloride
QMS	:	Quality Management System
TPIA	:	Third Party Inspection Agency
URL	:	Universal Resource Locator

CONTENTS

1.0 SCOPE 4

2.0 DEFINITIONS 4

3.0 REFERENCE DOCUMENTS 4

4.0 DOCUMENTATION REQUIREMENTS 4

Attachments

Format for completeness of Final Documentation Annexure-1

1.0 SCOPE

This specification establishes the Documentation Requirements from Suppliers. All documents/data against the PO / PR / MR shall be developed and submitted to OWNER by the suppliers for review / records, in line with this specification.

2.0 DEFINITIONS

2.1 Supplier

For the purpose of this specification, the word "SUPPLIER" means the person(s), firm, company or organization who is under the process of being contracted by OWNER for delivery of some products (including service). The word is considered synonymous to bidder, contractor or vendor.

2.2 Owner

Owner means the owner of the project for which services / products are being purchased and includes their representatives, successors and assignees.

3.0 REFERENCE DOCUMENTS

VPC-SS-PP-2044 Standard Specification for Quality Management System Requirements from Vendors

4.0 DOCUMENTATION REQUIREMENTS

4.1 Documents/Data to be Submitted by the Supplier

4.1.1 The Supplier shall submit the documents and data against the PO/PR/MR as per the list given in respective PO/PR/MR.

4.1.2 Review of the supplier drawings by PMC/ OWNER would be only to review the compatibility with basic designs and concepts and in no way absolve the supplier of his responsibility/contractual obligation to comply with PR requirements, applicable codes, specifications and statutory rules/regulations. Any error/deficiency noticed during any stage of manufacturing/execution/installation shall be promptly corrected by the supplier without any time and cost implications, irrespective of comments on the same were received from OWNER during the drawing review stage or not.

4.1.3 Unless otherwise specified, submission of documents for Review/Records shall commence as follows from the date of Fax of Intent / Letter of Intent/ Fax of Acceptance (FOA)/ Letter of Acceptance (LOA):

QMS - 1 week

Drawing/Document Control Index - 2 weeks

Other Documents/Drawings - As per approved Drawing/Document Control Index/Schedule

4.1.4 Documents as specified in PO/PR/MR are minimum requirements. Supplier shall submit any other document/data required for completion of the job as per OWNERs instructions.

4.2 Style and Formatting

4.2.1 All Documents shall be in ENGLISH language and in M.K.S System of units.

4.2.2 Before forwarding the drawings and documents, contractor shall ensure that the following information are properly mentioned in each drawing:

Purchase Requisition Number

Name of Equipment / Package

Equipment / Package Tag No.

Name of Project

Client

Drawing / Document Title

Drawing / Document No.

Drawing / Document Revision No. and Date

4.3 Review and Approval of Documents by Supplier

4.3.1 The Drawing/Documents shall be reviewed, checked, approved and duly signed/stamped by supplier before submission. Revision number shall be changed during submission of the revised supplier documents and all revisions shall be highlighted by clouds. Whenever the supplier requires any sub-supplier drawings to be reviewed by OWNER, the same shall be submitted by the supplier after duly reviewed, approved and stamped by the supplier. Direct submission of sub-supplier's drawings without contractor's approval shall not be entertained.

4.4 Document Category

4.4.1 Review Category

Following review codes shall be used for review of supplier Drawings/Documents:

Review Code A	-	No comments. Proceed with manufacture/ fabrication as per the document.
Review Code B	-	Proceed with manufacture/fabrication as per commented document. Revised document required.
Review Code C	-	Document does not conform to basic requirements as marked. Resubmit for review
Review Code D	-	Document Rejected
Review Code F	-	For information
R	-	Document is retained for Records. Proceed with manufacture/fabrication.
V	-	Void

4.5 Methodology for Submission of Documents to PMC/Owner

4.5.1 Document Control Index (DCI)

Supplier shall create and submit Document Control Index (DCI) for review based on PO/PR/MR along with schedule date of submission of each drawing/document on OWNERs eDMS. The DCI shall be specific with regard to drawing/document no. and the exact title. Proper sequencing of the drawings/documents should be ensured in scheduled date of submission on of the job as per OWNER.

4.5.2 Submission of Drawings/Documents

Drawings/documents and data shall be uploaded on the eDMS Portal as per DCI

4.5.3 Statutory Approvals

Wherever approval by any statutory body is required to be taken by Supplier, the Supplier shall submit copy of approval by the authority to PMC/OWNER.

4.5.4 Details of Contact Persons of Supplier

After placement of order supplier shall assign a Project Manager for that order. The details are to be filled online through the portal. The details include e-mail address, mailing address, telephone nos., fax nos. and name of Project Manager. All the system generated emails pertaining to that order shall be sent to the assigned Project Manager.

4.5.5 Schedule and Progress Reporting

Supplier shall submit monthly progress report and updated procurement, engineering and manufacturing status (schedule vs. actual) every month, beginning within 2 weeks from FOA/LOA . In case of exigencies, PMC/Owner can ask for report submission as required on weekly/fortnightly/adhoc basis depending upon supply status and supplier shall furnish such reports promptly without any price implication. Format for progress report shall be submitted by the Supplier during kick off meeting or within one week of receiving FOA/LOA, whichever is earlier.

4.5.6 Quality Assurance Plan/Inspection and Test Plan

Inspection and test plans (ITP) attached if any, to the MR/PR are to be followed.

However for cases wherein ITPs have not been attached with MR/PR, Supplier shall submit within one week of receiving FOA/LOA, the Quality Assurance Plan for manufacturing, covering quality control of critical bought out items/materials, inspection& testing at various stages of production, quality control records and site assembly &testing as may be applicable to the specific order and obtain approval from OWNER /PMC/ third party inspection agency, as applicable.

For Package equipment contracts, the supplier shall prepare a list of items/ equipment's and their inspection categorization plan for all items included in the scope of supply immediately after receipt of order and obtains approval for the same from OWNER. The

items shall be categorized into different categories depending upon their criticality for the scope of inspection of TPIA and/or OWNER/ OWNER appointed PMC.

4.5.7 Inspection Release Note (IRN)/ Inspection Certificate (IC)

IRN/ IC shall be issued by PMC Inspector/ third party inspection agency on the basis of successful inspection, review of certificates as per specifications & agreed quality plan (as applicable) and only after all the drawings/documents as per DCI are submitted and are accepted under review code-A or code R. Supplier shall ensure that necessary documents/manufacturing and test certificates are made available to PMC/TPIA as and when desired.

Note: Non fulfilling above requirement shall result into appropriate penalty or withholding of payment as per conditions of PO/PR/MR.

Transportation Plan for Over Dimensional Consignments (ODC), if any, shall be submitted within 2 weeks of receiving FOA/LOA, for approval. Consignment with parameters greater than following shall be considered as over dimensional.

Dimensions: 4 meters width x 4 meters height x 20 meters length

Weight: 32 MT

4.6 Final Documentation

4.6.1 As Built Drawings

Shop changes made by Supplier after approval of drawings under `Code A' by OWNER/OWNER appointed PMC and deviations granted through online system , if any, shall be marked in hard copies of drawings which shall then be stamped 'As-built' by the supplier. These 'As-built' drawings shall be reviewed and stamped by PMC Inspector/TPIA also. Supplier shall prepare scanned images files of all marked — up 'As — built drawings. Simultaneously Supplier shall incorporate the shop changes in the native soft files of the drawings also.

4.6.2 As Built Final Documents

As built final documents shall be submitted as listed in PO/PR/MR.

4.6.3 Packing/Presentation of Final Documents

Final Documents shall be legible photocopies in A4, A3 size only. Drawings will be inserted in plastic pockets (both sides transparent, sheet thickness minimum 0.1 mm) with an extra strip of 12 mm wide for punching so that drawings are well placed.

Final Documentation shall be bound in Hard board Plastic folder(s) of size 265 mm x 315 mm (101 /2 inch x 12 1 /2 inch) and shall not be more that 75 mm thick. It may be of several volumes and each volume shall have a volume number, index of volumes and index of contents of that particular volume. Where number of volumes are more, 90mm thickness can be used. Each volume shall have top PVC sheet of minimum 0.15mm thick duly fixed and pressed on folder cover and will have 2 lever clips. In case of imported items documents, 4 lever clips shall also be accepted. All four corners of folders shall be properly metal clamped. Indexing of contents with page numbering must be incorporated by supplier. Spiral/Spico bound documents shall not be acceptable. As mentioned above,

books should be in hard board plastic folders with sheets punched and having 2/4 lever clips arrangement.

Each volume shall contain on cover a Title Block indicating package Equipment Tag No. & Name, PO/Purchase Requisition No., Name of Project and Name of Customer. Each volume will have hard front cover and a reinforced spine to fit thickness of book. These spines will also have the title printed on them. Title shall include also volume number (say 11 of 15) etc.

4.6.4 Submission of Soft Copies

Supplier shall submit to OWNER, the scanned images files as well as the native files of

Drawings / documents, along with proper index.

In addition to hard copies, Supplier shall submit electronic file (CD-ROM) covering soft

copies of all the final drawings and documents, all text documents prepared on computer, scanned images of all important documents (not available as soft files), all relevant catalogues, manuals available as soft files (editable copies of drawings/text documents, while for catalogues/manuals/proprietary information and data, PDF files can be furnished).

All the above documents shall also be uploaded on the OWNERs eDMS portal.

4.6.5 Completeness of Final Documentation

Supplier shall get the completeness of final documentation verified by PMC appointed TPIA and attach the Format for Completeness of Final Documentation Format duly signed by OWNER/ OWNER appointed PMC/ Inspector or TPIA as applicable to the document folder.

ANNEUXRE-1

COMPLETENESS OF FINAL DOCUMENTATION

Name of Supplier/Contractor :

Customer :

Project :

OWNER's Job No. :

Purchase Order No./

Contract No. :

Purchase Requisition No./

Tender No. : Rev. No. :

Name of the Work/

Equipment :

Tag. No. :

Supplier's/ Contractor's

Works Order No. :

Certified that the Engineering Documents/ Manufacturing & Test Certificates submitted by the supplier is complete in accordance with the Vendor Data Requirements of Purchase Requisition.

Signature :..... Signature:.....

Date :..... Date:.....

Name :..... Name:.....

Designation :..... Designation:.....

Department :..... Department:.....

Supplier/Contractor **OWNER/PMC/TPIA**

CHECKLIST – TECHNICAL

Bidder confirms following, as a minimum, has been enclosed in the offer.

S.NO.	Requirements	Compiled by Bidder(Tick)
1	Reference List of previous supply of Procured item	
2	Filled – up Data Sheets, duly signed and stamped by bidder enclosed.	
3	List of recommended commissioning spares and accessories for Procured item.	
4	List of recommended spares and accessories for two year normal operation for procured item.	
5	Compliance statement duly filled and stamped enclosed.	
6	GA & assembly drawings, cross section drawings including part list & material list enclosed.	
7	Other technical details & vendor's product catalogues enclosed.	

0	25.05.2017	ISSUED AS STANDARD	AS	GS	AD
REV	**DATE**	**DESCRIPTION**	**PREP**	**CHK**	**APPR**

COMPLIANCE STATEMENT

S.No	Requirement	Bidder's Confirmation
1	Bidder confirms that all materials proposed by the bidder are same/ superior to those specified in specification/ data sheets enclosed.	
2	Bidder confirms that the offer is in total compliance with the Technical requirements of the Material Requisition. Bidder confirms that deviation expressed or implied anywhere else in the offer shall not be considered valid.	
3	Bidder confirms that all spares and accessories required for two years of normal operation have been quoted separately.	
4	Bidder confirms that prices for start-up/commissioning spares and accessories have been included in the quoted items.	
5	Bidder confirms that in the event of securing order for the requisitioned item(s), good for manufacturing drawings of ordered item(s) shall have complete details with dimensions, part list and material list including back-up calculations in the first submission, failing which the vendor shall be solely responsible for any likely delay in delivery of item(s).	

Bidder's Signature with Stamp

ENERGISING QUALITY	DEVIATION SHEET	VCS-SD-DS-001

DEVIATION/ EXCEPTION/ CLARIFICATION SHEET

Sr. No.	Contractor's Inquiry Reference	Contractor's Requirement	Proposed Deviation by Supplier, with Technical Justification	Cost Impact, if any	Contractor's Conclusions

NOTES

1- Bidder confirms that apart of from the deviations/exceptions/clarifications listed above, the bid is in full compliance with Inquiry requisition.
2- Bidder shall submit this sheet duly filled up and signed by him along with his bid. In case there is no deviation, then also supplier shall submit this sheet along with his bid indicating NIL deviation.

(Contractor's Name and Signature with Seal)

0	25.05.2017	ISSUED AS STANDARDS	AS	GS	AD
REV	**DATE**	**DESCRIPTION**	**PREP**	**CHK**	**APPR**

ENERGISING QUALITY	**CLIENT:**	**IGGL**	IGGL
	CONSULTANT:	**VCS Quality Services Private Limited**	

LIST OF RECOMMENDED THIRD PARTY INSPECTION AGENCY (TPIA)

SL. NO	NAME OF TPI
1	Det Norske Veritas (DNV)
2	Germanischer Lloyd
3	Bureau Veritas (BV)- IGGL's surveillance TPI as on date
4	Moody International
5	ABS - IGGL's surveillance TPI as on date
6	SGS
7	Certification Engineer International Ltd(CEIL)
8	Technische Ulierwachungs Verein (TUV)
9	American Bureau Services(ABS)
10	AB-Vincotee
11	Lloyd Register of Industrial Services
12	Meenar Global

Apart from inspection by TPIA, inspection may also be performed by VCS / IGGL's personnel.

INFORMATION/ DOCUMENTS / DRAWINGS TO BE SUBMITTED BY SUCCESSFUL BIDDER

Successful Bidder shall submit four copies unless noted otherwise, each of the following:

1. Inspection & test reports for all mandatory tests as per the applicable code as well as test reports for any supplementary tests, in nicely bound volumes.
2. Filled in Quality Assurance Plan (QAP) for Purchaser's/ Consultant's approval. These QAPs shall be submitted in two copies within 15 days from LOI/ FOI.
3. Detailed completion schedule activity wise (Bar Chart), within one week of placement of order.

Note : All drawings, instructions, catalogues, etc., shall be in English language and all dimensions shall be metric units.

0	25.05.2017	ISSUED AS STANDARDS	AS	GS	AD
REV	**DATE**	**DESCRIPTION**	**PREP**	**CHK**	**APPR**

INSTRUCTION TO BIDDERS

1. Bidder to note that no correspondence shall be entered into or entertained after the bid submission.

2. Bidder shall furnish quotation only in case he can supply material strictly as per this Material Requisition and specification/data sheet forming part of Material Requisition.

3. If the offer contains any technical deviations or clarifications or stipulates any technical specifications (even if in line with MR requirements) and does not include complete scope & technical / performance data required to be submitted with the offer, the offer shall be liable for rejection.

4. Bidder must submit all documents as listed in checklist with his offer.

5. Supplier must note that stage wise inspection for complete fabrication, testing including the raw material inspected to be carried out.

6. Vendors for bought out items to be restricted to the approved vendor list attached with bid document. Approval of additional vendor if required, for all critical bought out items shall be obtained by the supplier from the purchaser before placement of order. Credentials/PTR of the additional vendor proposed to be submitted by supplier for review and approval of Purchaser/ Purchaser's representative

0	25.05.2017	ISSUED AS STANDARDS	AS	GS	AD
REV	**DATE**	**DESCRIPTION**	**PREP**	**CHK**	**APPR**

LIST OF SPARES

S.No.	Part No.	Description	Quantity(Minimum)
1.			
2.			
3.			
4.			
5.			
6.			
7.			
8.			
9.			
10.			

0	25.05.2017	ISSUED AS STANDARD	AS	GS	AD
REV	**DATE**	**DESCRIPTION**	**PREP**	**CHK**	**APPR**

ENERGISING QUALITY	REFERENCE LIST	VCS-SD-RL-001

REFERENCE LIST

Sl No.	Project	Year of Supply	Client , Address and Contact No.	Email	Size and Rating / thk	Service

Bidder' s Signature with stamp

0	25.05.2017	ISSUED AS STANDARDS	AS	GS	AD
REV	**DATE**	**DESCRIPTION**	**PREP**	**CHK**	**APPR**

ENERGISING QUALITY	**VENDOR DRAWINGS DOCUMENT SCHEDULE**	**VCS-SD-VS-001**

VENDOR DRAWINGS

DOCUMENT SCHEDULE

	Vendor Drawing/ Document Submission Schedule	Status:
		Date:

Client	Project		Vendor Name	
Item Description	PO No.		Address	
	Date		Contact Person:	Fax:
VCS Department		Contact Person(VCS)	Phone:	Email:

S. No.	Equipment/ Item Number	Drg./Doc. Nomenclature	Vendor Drg./ Doc. Number	Vendor Drg./Doc. Title	Category Review (R) / Records	Scheduled date of 1st submission (Rev.0)	Form Electronic/ Print	Remarks

0	25.05.2017	ISSUED AS STANDARDS	AS	GS	AD
REV	**DATE**	**DESCRIPTION**	**PREP**	**CHK**	**APPR**