DRG.NO.:-MEC/05/28/23UU/NGCS/TD/003

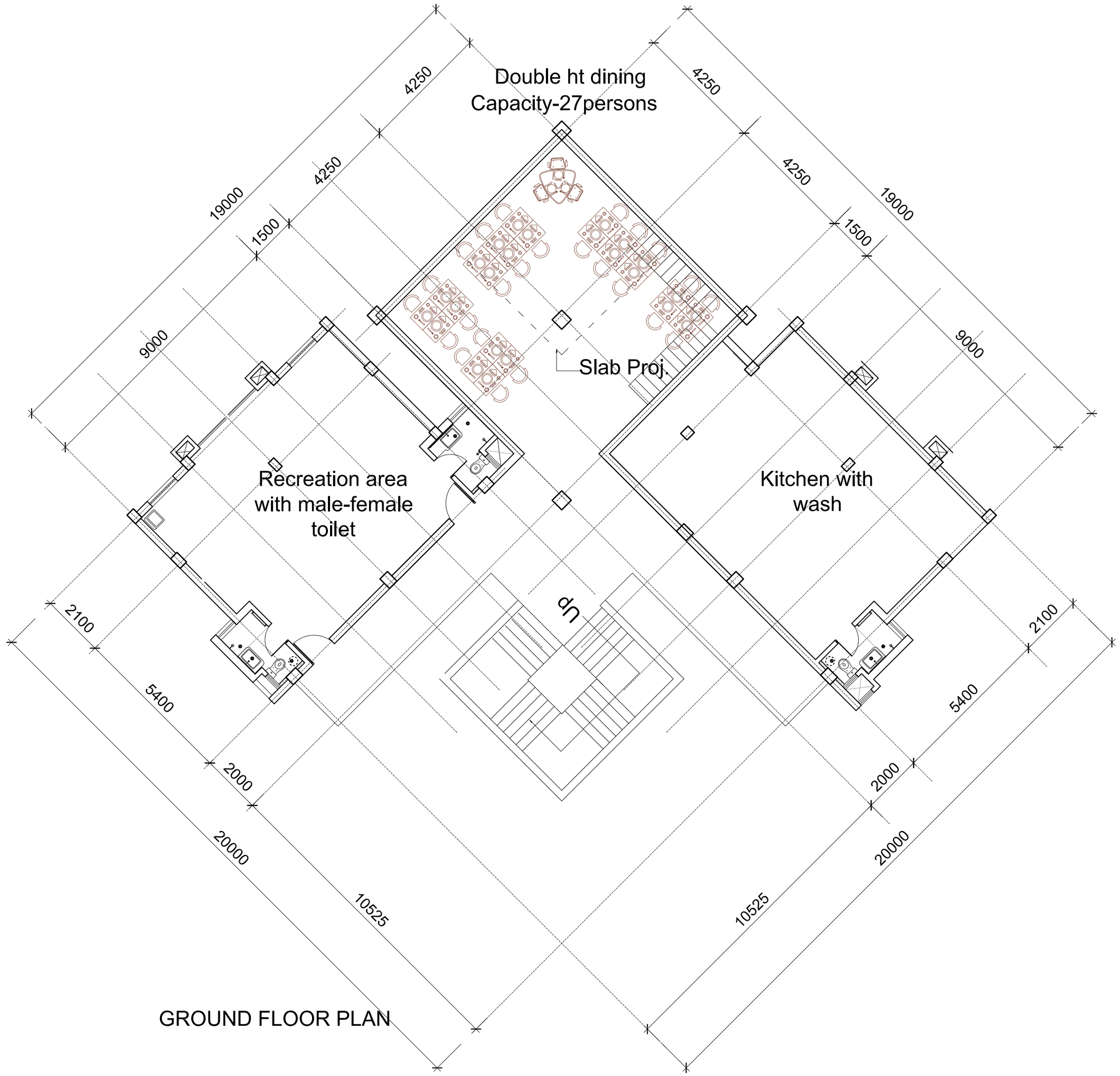

GROUND FLOOR PLAN

FOR TENDER PURPOSE ONLY

AREA - 322 Sq M.

SCHEDULE OF FINISHES(OUTSIDE) - Granite & zinc cladding

INDRADHANUSH GAS GRID LTD.

मेकॉन लिमिटेड

MECON LIMITED

NOTES:
1. 250MM WIDE BRICKS TO BE USED FOR WALLS.
2. ALL PAINTS TO BE ECO-FRIENDLY WITH LOW V.O.C.
3. CERAMIC TILES WITH RECYCLED CONTENTS TO BE USED.
4. LOW FLOW TOILET FIXTURES TO BE USED.
5. ±0.00 CORRESPONDS TO FINISHED ROAD TOP LEVEL
6. 12 MM DROP IN FINISH/SLAB TO BE MAINTAINED FROM INSIDE THE ROOM TO THE VERANDAH/BALCONY/TERRACE ETC.
7.1:80 MM SLOPE APPROXIMATELY TO BE MAINTAINED FOR DRAINAGE AT ROOF LVL.
8.ALL FINISH FLOOR LEVELS (EXTERNAL/INTERNAL) MUST BE LAID IN PROPER SLOPE & DIRECTION AS MAY BE REQUIRED AS/NORMAL ENGINEERING PRACTISE.

REV	DATE	ZONE	DESCRIPTION	BY	VERIFIED	REFERENCES	DRG.NO.
			REVISION				

REV / SEC — CONCURRED BY

THIS DRAWING IS THE PROPERTY OF MECON AND ISSUED FOR THE SPECIFIC PROJECT MENTIONED THEREIN. THIS IS NOT TO BE COPIED OR USED FOR OTHER PROJECTS UNLESS EXPRESSLY PERMITTED BY MECON.

SECTION	ARCHITECTURE
LOCATION	DELHI
DESIGNED	VIBHA
DRAWN	VIBHA
CHECKED AND VERIFIED	S.BASU
APPROVED	SIG DR.R.K.DUTTA
	DATE : 03.02.2022

NORTH - EAST GAS GRID PIPELINE PROJECT

CANTEEN BUILDING FOR COMPRESSOR STATION AT GUWAHATI

GROUND FLOOR PLAN

SCALE :- 1:100

DRG.NO.:-MEC/05/28/23UU/NGCS/TD/003

SHEET 1 OF 1 — REV 0

DRG.NO.:-MEC/05/28/23UU/NGCS/TD/004

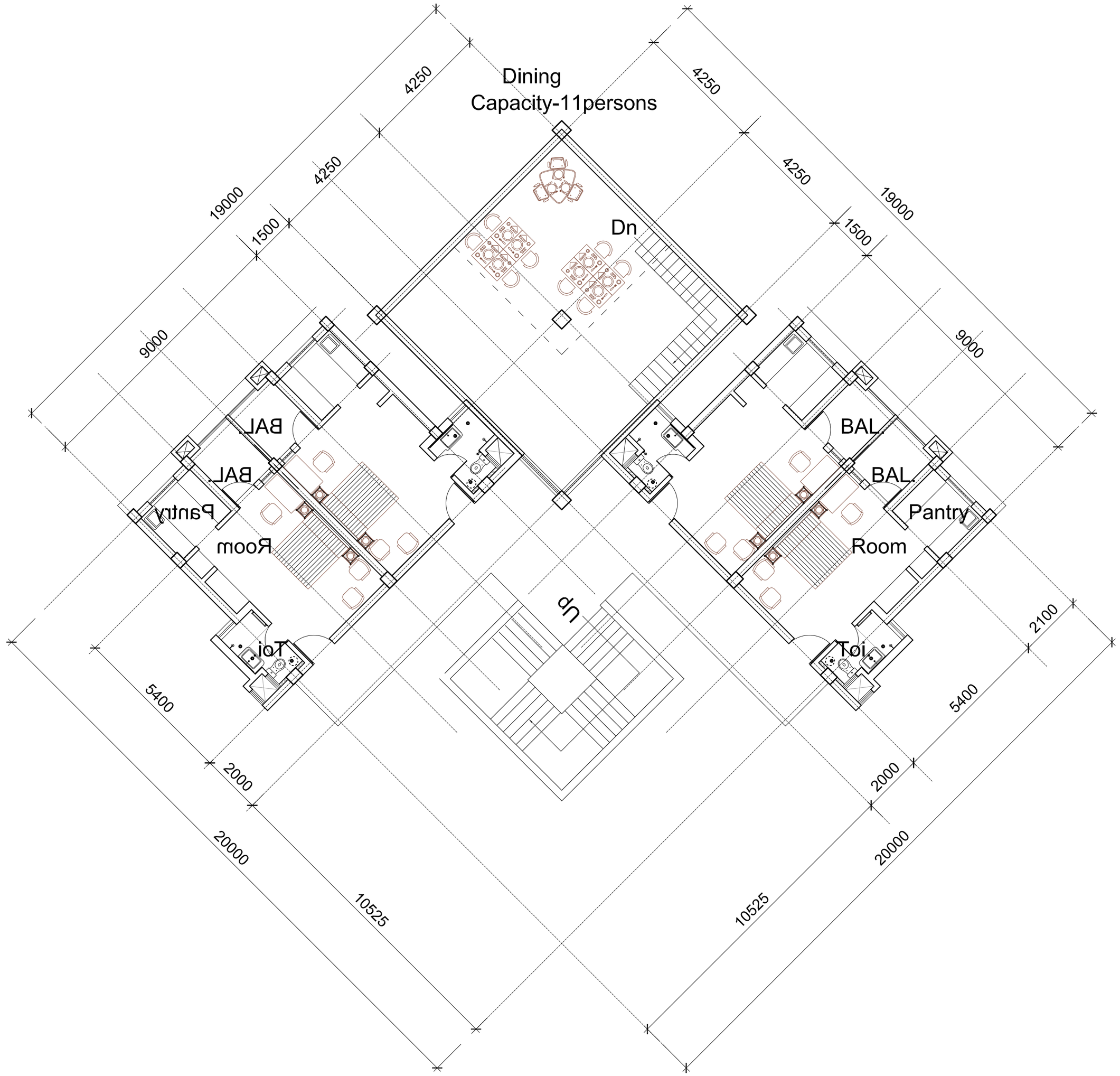

FOR TENDER PURPOSE ONLY

INDRADHANUSH GAS GRID LTD.

मेकॉन लिमिटेड

MECON LIMITED

AREA - 269 Sq M.

SCHEDULE OF FINISHES(OUTSIDE) - Granite & zinc cladding

NOTES:
1. 250MM WIDE BRICKS TO BE USED FOR WALLS.
2. ALL PAINTS TO BE ECO-FRIENDLY WITH LOW V.O.C.
3. CERAMIC TILES WITH RECYCLED CONTENTS TO BE USED.
4. LOW FLOW TOILET FIXTURES TO BE USED.
5. ±0.00 CORRESPONDS TO FINISHED ROAD TOP LEVEL
6. 12 MM DROP IN FINISH/SLAB TO BE MAINTAINED FROM INSIDE THE ROOM TO THE VERANDAH/BALCONY/TERRACE ETC.
7.1:80 MM SLOPE APPROXIMATELY TO BE MAINTAINED FOR DRAINAGE AT ROOF LVL.
8.ALL FINISH FLOOR LEVELS (EXTERNAL/INTERNAL) MUST BE LAID IN PROPER SLOPE & DIRECTION AS MAY BE REQUIRED AS/NORMAL ENGINEERING PRACTISE.

REV	DATE	ZONE	DESCRIPTION	BY	VERIFIED
			REVISION		

REFERENCES | DRG.NO.

THIS DRAWING IS THE PROPERTY OF MECON AND ISSUED FOR THE SPECIFIC PROJECT MENTIONED THEREIN. THIS IS NOT TO BE COPIED OR USED FOR OTHER PROJECTS UNLESS EXPRESSLY PERMITTED BY MECON.

REV / SEC — CONCURRED BY

SECTION	ARCHITECTURE
LOCATION	DELHI
DESIGNED	VIBHA
DRAWN	VIBHA
CHECKED AND VERIFIED	S.BASU
APPROVED	SIG DR.R.K.DUTTA
	DATE : 03.02.2022

NORTH - EAST GAS GRID PIPELINE PROJECT

CANTEEN BUILDING FOR COMPRESSOR STATION AT GUWAHATI

FIRST FLOOR PLAN

SCALE :- 1:100

DRG.NO.:-MEC/05/28/23UU/NGCS/TD/004

SHEET	REV
1 OF 1	0

DRG.NO.:-MEC/05/28/23UU/NGCS/TD/005

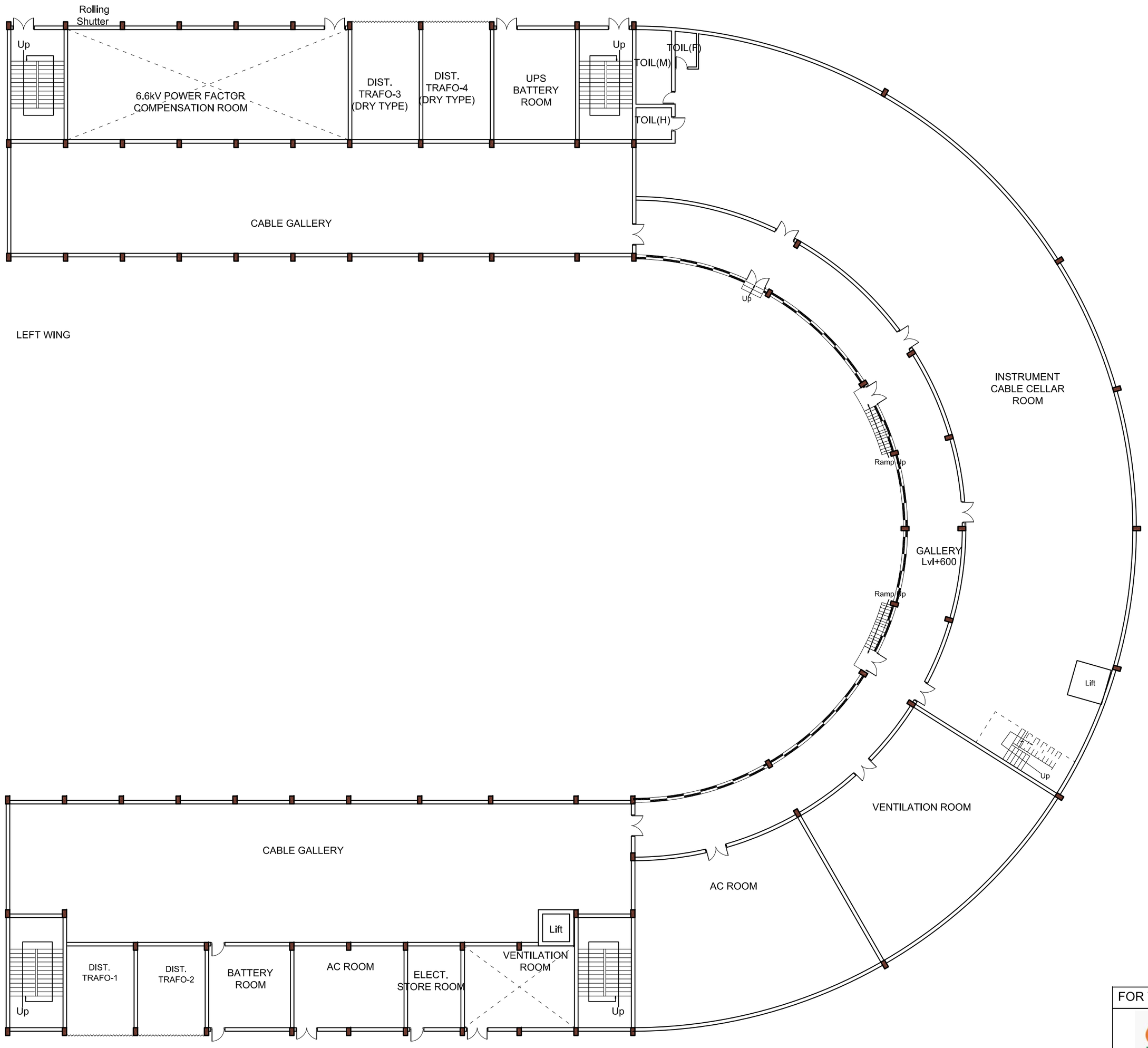

LEGEND
- 12mm th. Toughened glass upto lintel lvl
- 12mm th. Toughened glass from +600 of FFL upto lintel lvl

AREA - 2824.84 Sq M.

SCHEDULE OF FINISHES(OUTSIDE) - Granite & zinc cladding

1. 250MM WIDE BRICKS TO BE USED FOR WALLS.
2. ALL PAINTS TO BE ECO-FRIENDLY WITH LOW V.O.C.
3. CERAMIC TILES WITH RECYCLED CONTENTS TO BE USED.
4. LOW FLOW TOILET FIXTURES TO BE USED.
5. ±0.00 CORRESPONDS TO FINISHED ROAD TOP LEVEL
6. 12 MM DROP IN FINISH/SLAB TO BE MAINTAINED FROM INSIDE THE ROOM TO THE VERANDAH/BALCONY/TERRACE ETC.
7. 1:80 MM SLOPE APPROXIMATELY TO BE MAINTAINED FOR DRAINAGE AT ROOF LVL.
8. ALL FINISH FLOOR LEVELS (EXTERNAL/INTERNAL) MUST BE LAID IN PROPER SLOPE & DIRECTION AS MAY BE REQUIRED AS/NORMAL ENGINEERING PRACTISE.

REV	DATE	ZONE	DESCRIPTION	BY	VERIFIED	REFERENCES	DRG.NO.
A	21.03.22		revised as per comments from Instrumentation section,Ranchi on 17.03.22	Vibha	Vibha		

REVISION

REV / SEC

CONCURRED BY

THIS DRAWING IS THE PROPERTY OF MECON AND ISSUED FOR THE SPECIFIC PROJECT MENTIONED THEREIN. THIS IS NOT TO BE COPIED OR USED FOR OTHER PROJECTS UNLESS EXPRESSLY PERMITTED BY MECON.

FOR TENDER PURPOSE

IGGL — INDRADHANUSH GAS GRID LTD.

मेकॉन लिमिटेड
MECON LIMITED

SECTION	ARCHITECTURE
LOCATION	DELHI
DESIGNED	VIBHA
DRAWN	VIBHA
CHECKED AND VERIFIED	S.BASU
APPROVED	SIG DR.R.K.DUTTA
	DATE : 15.03.2022

NORTH - EAST GAS GRID PIPELINE PROJECT

CONTROL ROOM BUILDING FOR COMPRESSOR STATION AT GUWAHATI

GROUND FLOOR PLAN

SCALE :- 1:100 | SHEET 1 OF 1 | REV 0

DRG.NO.:-MEC/05/28/23UU/NGCS/TD/005

DRG.NO.:-MEC/05/28/23UU/NGCS/TD/006

LEFT WING

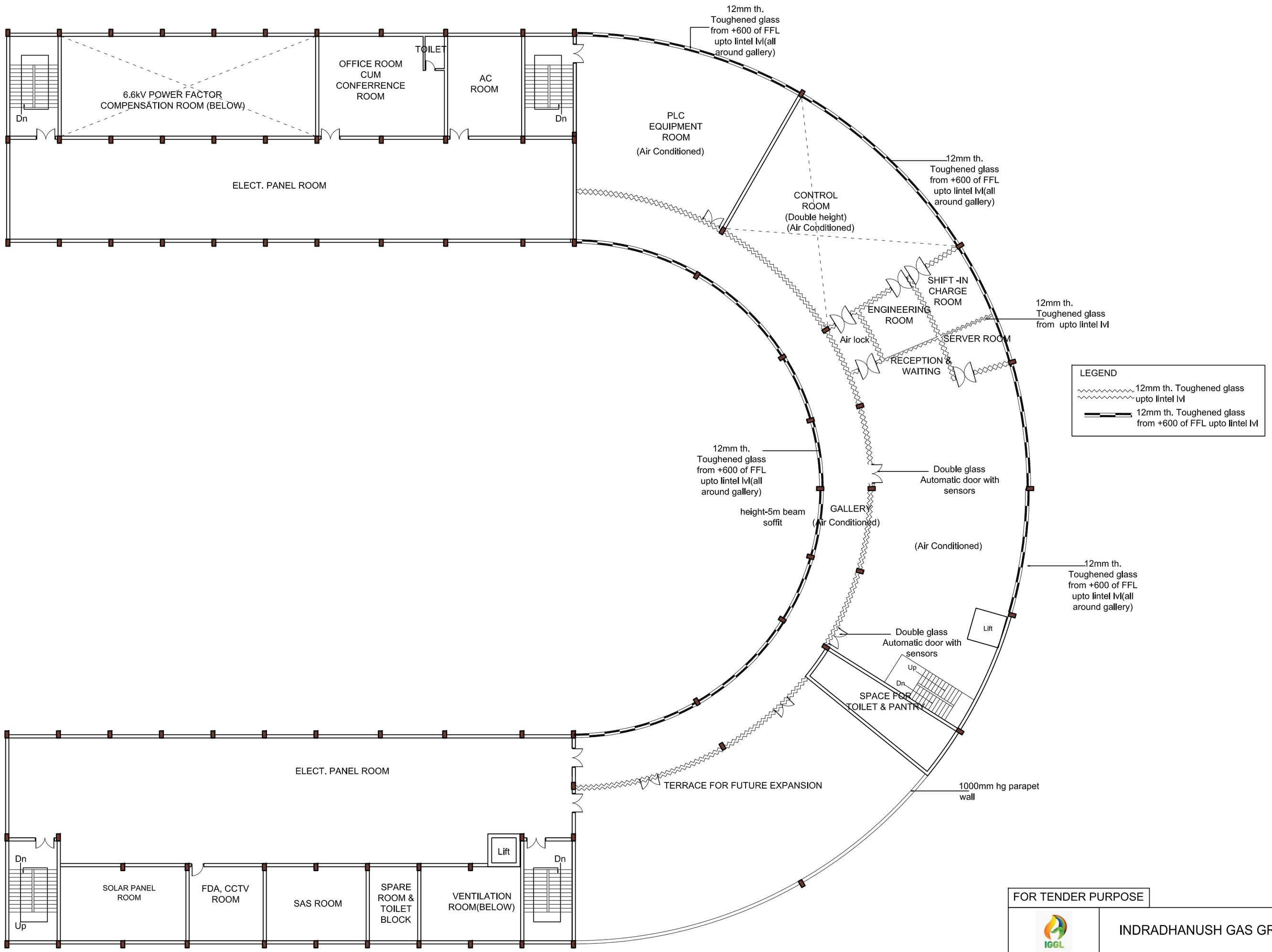

RIGHT WING

FIRST FLOOR PLAN

AREA - 2,204.84 Sq M

SCHEDULE OF FINISHES(OUTSIDE) - Granite & zinc cladding

1. 250MM WIDE BRICKS TO BE USED FOR WALLS.
2. ALL PAINTS TO BE ECO-FRIENDLY WITH LOW V.O.C.
3. CERAMIC TILES WITH RECYCLED CONTENTS TO BE USED.
4. LOW FLOW TOILET FIXTURES TO BE USED.
5. ±0.00 CORRESPONDS TO FINISHED ROAD TOP LEVEL
6. 12 MM DROP IN FINISH/SLAB TO BE MAINTAINED FROM INSIDE THE ROOM TO THE VERANDAH/BALCONY/TERRACE ETC.
7.1:80 MM SLOPE APPROXIMATELY TO BE MAINTAINED FOR DRAINAGE AT ROOF LVL.
8.ALL FINISH FLOOR LEVELS (EXTERNAL/INTERNAL) MUST BE LAID IN PROPER SLOPE & DIRECTION AS MAY BE REQUIRED AS/NORMAL ENGINEERING PRACTISE.

REV	DATE	ZONE	DESCRIPTION	BY	VERIFIED
A	21.03.22		revised as per comments from Instrumentation section,Ranchi on 17.03.22	Vibha	Vibha

REVISION

REFERENCES

DRG.NO.

THIS DRAWING IS THE PROPERTY OF MECON AND ISSUED FOR THE SPECIFIC PROJECT MENTIONED THEREIN. THIS IS NOT TO BE COPIED OR USED FOR OTHER PROJECTS UNLESS EXPRESSLY PERMITTED BY MECON.

REV / SEC

CONCURRED BY

FOR TENDER PURPOSE

INDRADHANUSH GAS GRID LTD.

मेकॉन लिमिटेड

MECON LIMITED

SECTION	ARCHITECTURE
LOCATION	DELHI
DESIGNED	VIBHA
DRAWN	VIBHA
CHECKED AND VERIFIED	S.BASU
APPROVED	SIG DR.R.K.DUTTA
	DATE : 15.03.2022

NORTH - EAST GAS GRID PIPELINE PROJECT

CONTROL ROOM BUILDING FOR COMPRESSOR STATION AT GUWAHATI

FIRST FLOOR PLAN

SCALE :- 1:100

DRG.NO.:-MEC/05/28/23UU/NGCS/TD/006

SHEET 1 OF 1

REV 0

1883 of 1910

DRG.NO.:-MEC/05/28/23UU/NGCS/TD/007

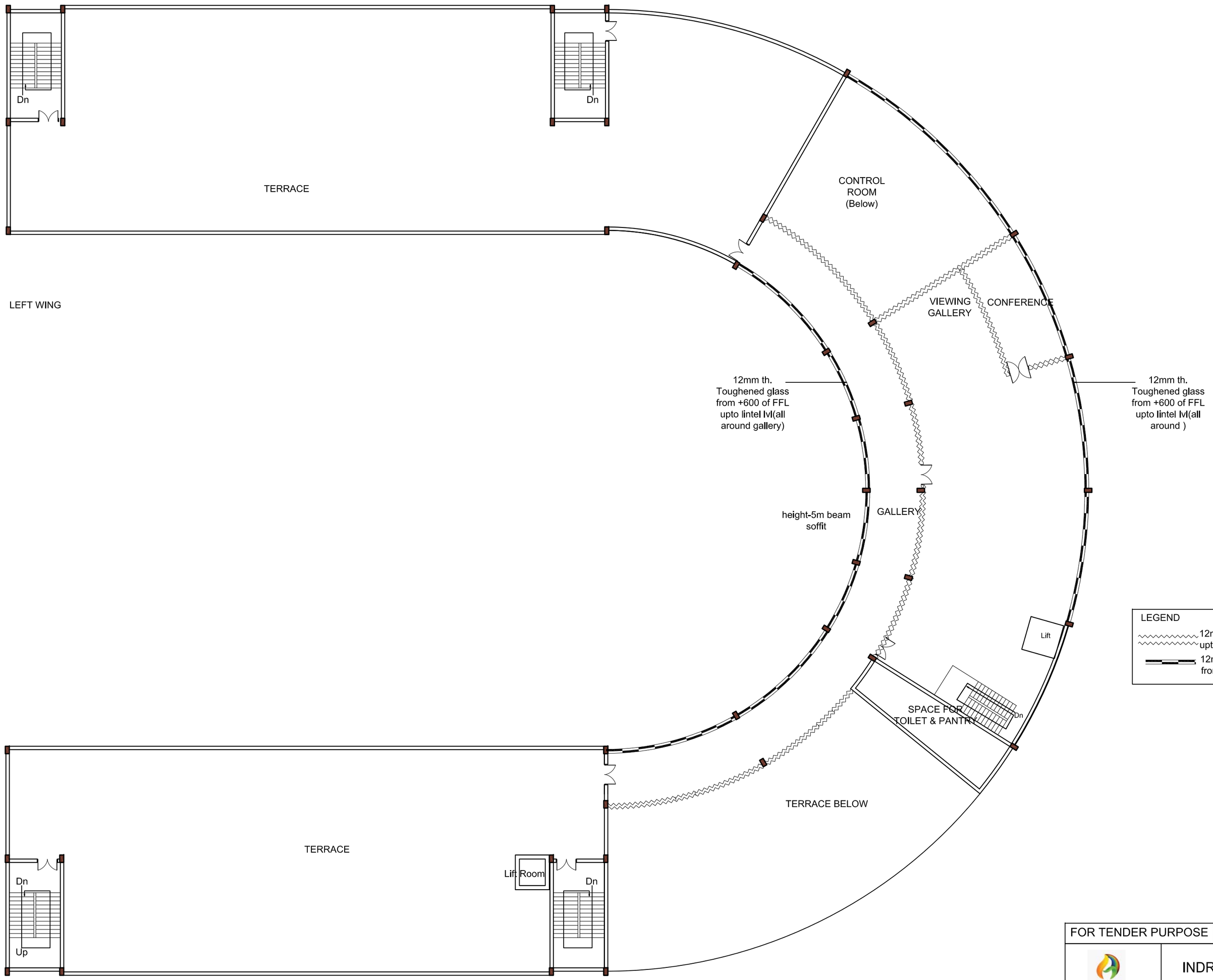

LEGEND
- 12mm th. Toughened glass upto lintel lvl
- 12mm th. Toughened glass from +600 of FFL upto lintel lvl

SECOND FLOOR PLAN

AREA - 1197.33 Sq M.

SCHEDULE OF FINISHES(OUTSIDE) - Granite & zinc cladding

FOR TENDER PURPOSE

INDRADHANUSH GAS GRID LTD.

मेकॉन लिमिटेड

MECON LIMITED

1. 250MM WIDE BRICKS TO BE USED FOR WALLS.
2. ALL PAINTS TO BE ECO-FRIENDLY WITH LOW V.O.C.
3. CERAMIC TILES WITH RECYCLED CONTENTS TO BE USED.
4. LOW FLOW TOILET FIXTURES TO BE USED.
5. ±0.00 CORRESPONDS TO FINISHED ROAD TOP LEVEL
6. 12 MM DROP IN FINISH/SLAB TO BE MAINTAINED FROM INSIDE THE ROOM TO THE VERANDAH/BALCONY/TERRACE ETC.
7.1:80 MM SLOPE APPROXIMATELY TO BE MAINTAINED FOR DRAINAGE AT ROOF LVL.
8.ALL FINISH FLOOR LEVELS (EXTERNAL/INTERNAL) MUST BE LAID IN PROPER SLOPE & DIRECTION AS MAY BE REQUIRED AS/NORMAL ENGINEERING PRACTISE.

REV.NO	DATE	ZONE	DESCRIPTION	BY	VERIFIED	REFERENCES	DRG.NO.
A	21.03.22		revised as per comments from Instrumentation section,Ranchi on 17.03.22	Vibha	Vibha		

REVISION

THIS DRAWING IS THE PROPERTY OF MECON AND ISSUED FOR THE SPECIFIC PROJECT MENTIONED THEREIN. THIS IS NOT TO BE COPIED OR USED FOR OTHER PROJECTS UNLESS EXPRESSLY PERMITTED BY MECON.

REV / SEC

CONCURRED BY

SECTION	ARCHITECTURE
LOCATION	DELHI
DESIGNED	VIBHA
DRAWN	VIBHA
CHECKED AND VERIFIED	S.BASU
APPROVED	SIG DR.R.K.DUTTA
	DATE : 15.03.2022

NORTH - EAST GAS GRID PIPELINE PROJECT

CONTROL ROOM BUILDING FOR COMPRESSOR STATION AT GUWAHATI

SECOND FLOOR PLAN

SCALE :- 1:100

DRG.NO.:-MEC/05/28/23UU/NGCS/TD/007

SHEET 1 OF 1

REV 0

DRG.NO.:-MEC/05/28/23UU/NGCS/TD/008

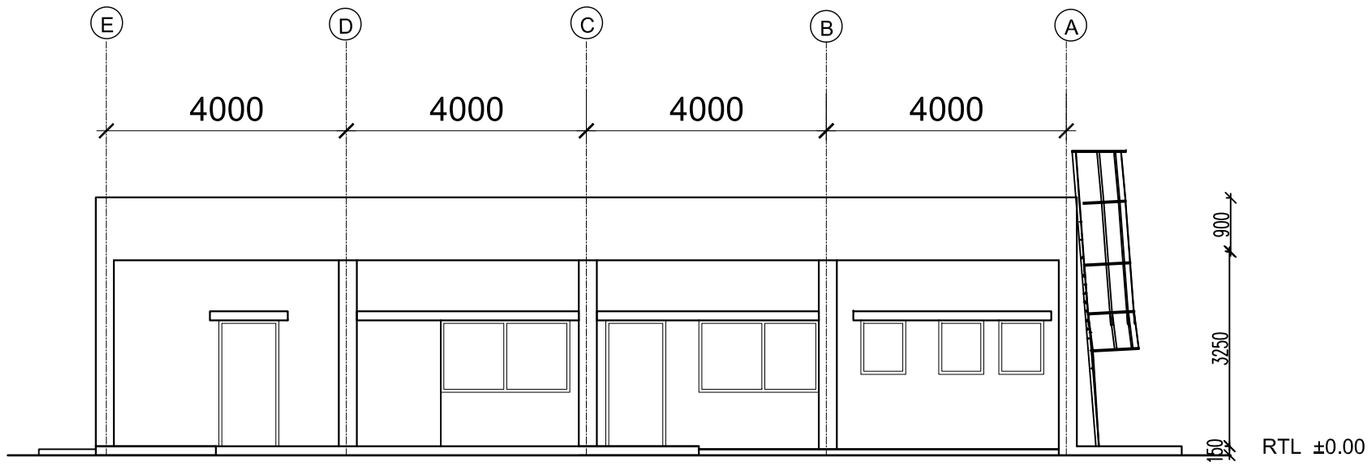

⚠ SIDE ELEVATION FOR BUILDING

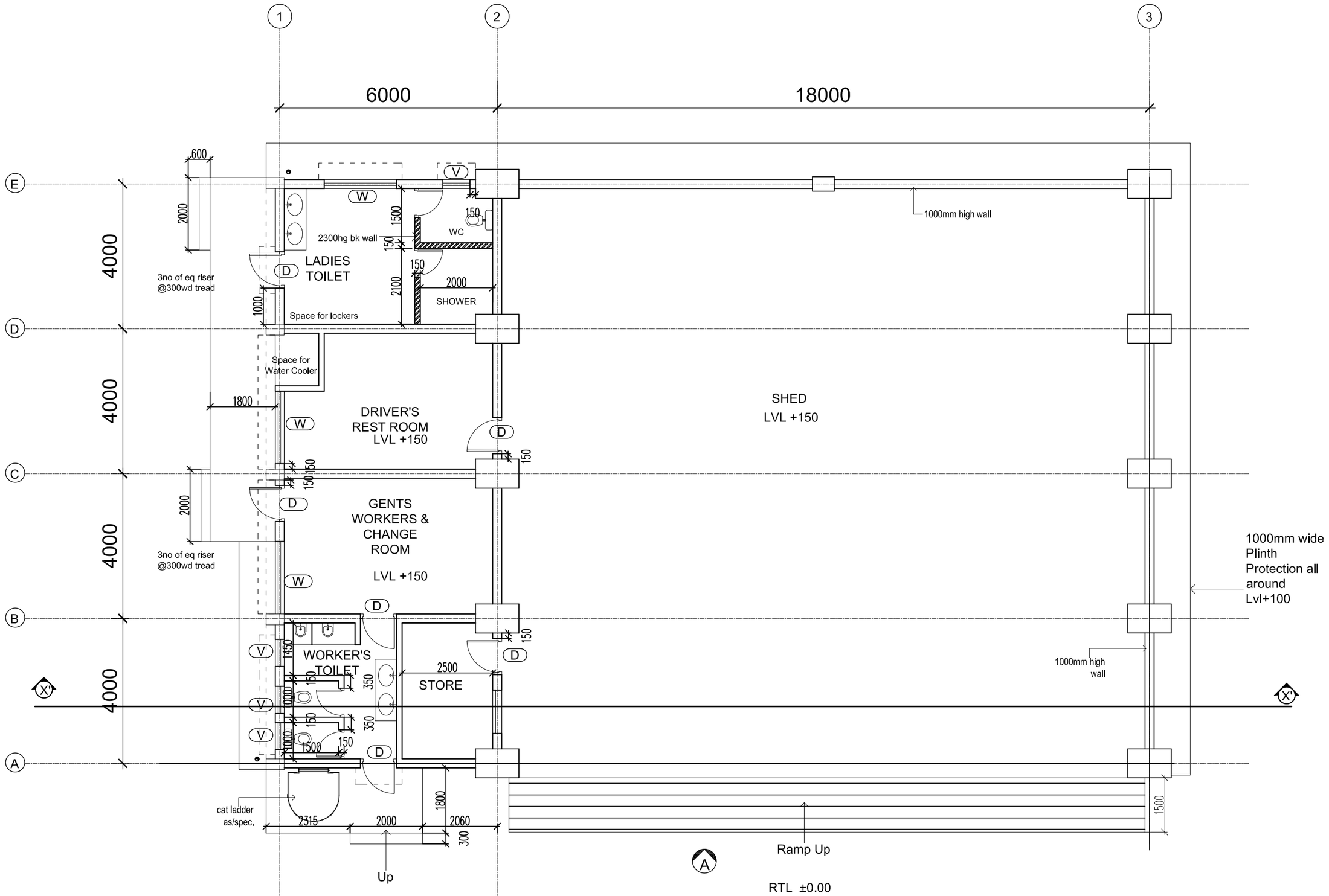

GROUND FLOOR PLAN

SCHEDULE OF OPENINGS

S.NO.	TYPE	MASONRY OPENING W X H	LEVELS SILL	LEVELS LINTEL	DESCRIPTION	NO.	Remarks
1	D	1000X2100	-	2100	single shutter steel door of approved manufacturer's spec.	6	
2	W	2000X1200	900		Steel window	3	
3	W1	1200 X 1200	900			1	
4	V	750X900	1200		Steel ventilator	3	

SCHEDULE OF FINISHES (INSIDE)

S. NO.	ROOM NAME	WALL	CEILING	FLOORING	SKIRTING/DADO (100mm from FFL)
1	Shed	Acrylic emulsion-eco-friendly paint with low VOC	-	CC flooring	
2	Ramp			Reinforced concrete tiles	
3	Driver's rest room,Gent's worker change room & Store	Acrylic emulsion-eco-friendly paint with low VOC		Polished Kota Stone	
4	Toilets			Anti Skid ceramic tiles	Glazed Ceramic tiles upto +2100mm lvl from FFL(300X600)

EXTERNAL FINISH - EXTERNAL ACRYLIC EMULSION WEATHERPROOF PAINT AS / SPEC.

NOTES:
1. 250MM WIDE BRICKS TO BE USED FOR WALLS.
2. ALL PAINTS TO BE ECO-FRIENDLY WITH LOW V.O.C.
3. CERAMIC TILES WITH RECYCLED CONTENTS TO BE USED.
4. LOW FLOW TOILET FIXTURES TO BE USED.
5. ±0.00 CORRESPONDS TO FINISHED ROAD TOP LEVEL
6. 12 MM DROP IN FINISH/SLAB TO BE MAINTAINED FROM INSIDE THE ROOM TO THE VERANDAH/BALCONY/TERRACE ETC.
7.1:80 MM SLOPE APPROXIMATELY TO BE MAINTAINED FOR DRAINAGE AT ROOF LVL.
8.ALL FINISH FLOOR LEVELS (EXTERNAL/INTERNAL) MUST BE LAID IN PROPER SLOPE & DIRECTION AS MAY BE REQUIRED AS/NORMAL ENGINEERING PRACTISE.

REV	DATE	ZONE	DESCRIPTION	BY	VERIFIED
			REVISION		

REFERENCES | DRG.NO.

THIS DRAWING IS THE PROPERTY OF MECON AND ISSUED FOR THE SPECIFIC PROJECT MENTIONED THEREIN. THIS IS NOT TO BE COPIED OR USED FOR OTHER PROJECTS UNLESS EXPRESSLY PERMITTED BY MECON.

REV / SEC | CONCURRED BY

FOR TENDER PURPOSE ONLY

INDRADHANUSH GAS GRID LTD.

मेकॉन लिमिटेड

MECON LIMITED

SECTION	ARCHITECTURE
LOCATION	DELHI
DESIGNED	VIBHA
DRAWN	
CHECKED AND VERIFIED	S.BASU
APPROVED	SIG DR.R.K.DUTTA
	DATE : 01.02.2022

NORTH - EAST GAS GRID PIPELINE PROJECT

FIRE TENDER HOUSE FOR COMPRESSOR STATION AT GUWAHATI

GROUND FLOOR PLAN

SCALE :- 1:100 | SHEET 1 OF 1 | REV 0

DRG.NO.:-MEC/05/28/23UU/NGCS/TD/008

DRG.NO.:-MEC/05/28/23UU/NGCS/TD/009

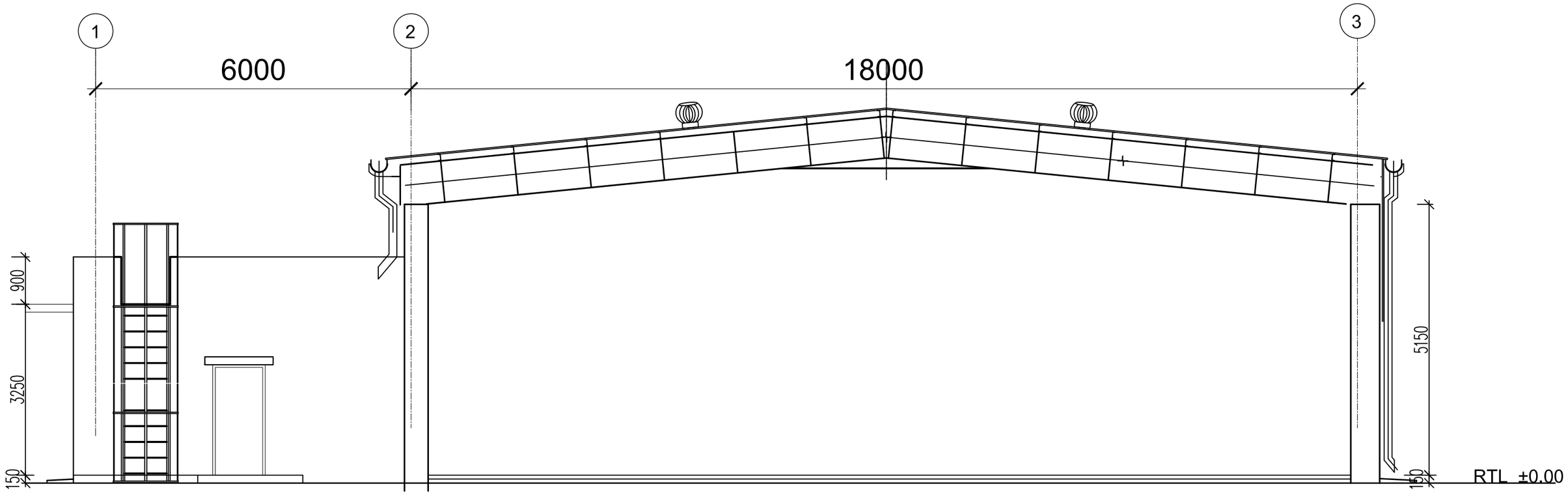

FRONT ELEVATION FOR BUILDING

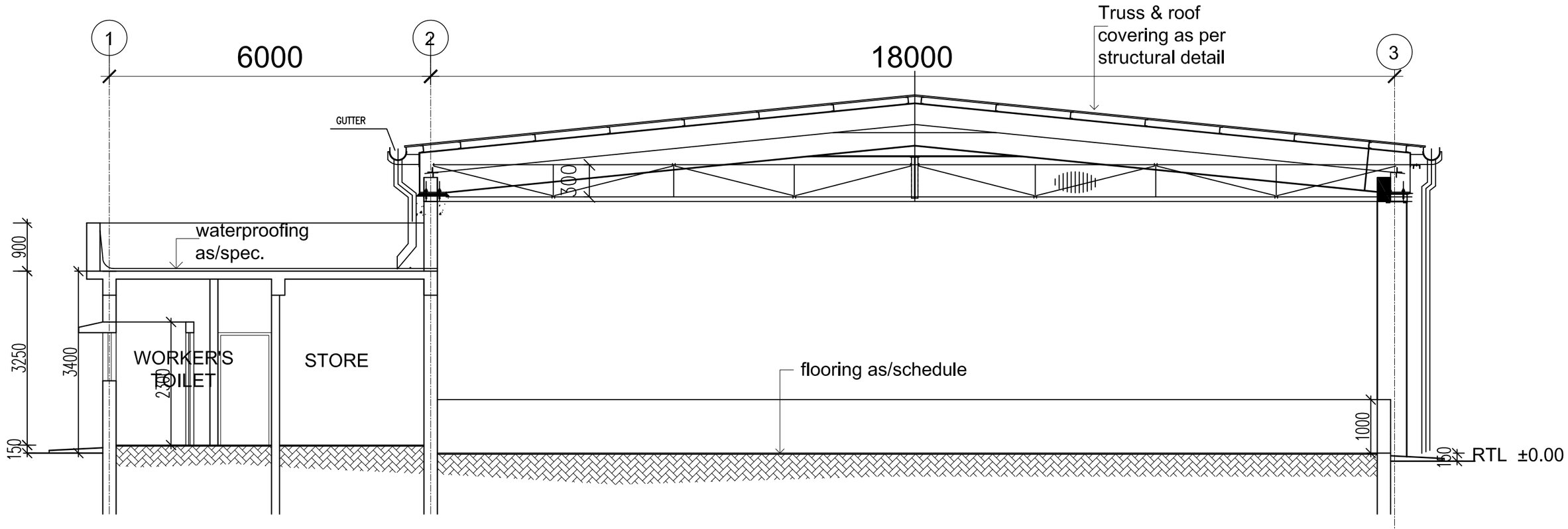

SECTION AT X-X'

FOR TENDER PURPOSE ONLY

INDRADHANUSH GAS GRID LTD.

मेकॉन लिमिटेड

MECON LIMITED

NOTES:
1. 250MM WIDE BRICKS TO BE USED FOR WALLS.
2. ALL PAINTS TO BE ECO-FRIENDLY WITH LOW V.O.C.
3. CERAMIC TILES WITH RECYCLED CONTENTS TO BE USED.
4. LOW FLOW TOILET FIXTURES TO BE USED.
5. ±0.00 CORRESPONDS TO FINISHED ROAD TOP LEVEL
6. 12 MM DROP IN FINISH/SLAB TO BE MAINTAINED FROM INSIDE THE ROOM TO THE VERANDAH/BALCONY/TERRACE ETC.
7.1:80 MM SLOPE APPROXIMATELY TO BE MAINTAINED FOR DRAINAGE AT ROOF LVL.
8.ALL FINISH FLOOR LEVELS (EXTERNAL/INTERNAL) MUST BE LAID IN PROPER SLOPE & DIRECTION AS MAY BE REQUIRED AS/NORMAL ENGINEERING PRACTISE.

REV	DATE	ZONE	DESCRIPTION	BY	VERIFIED
			REVISION		

REFERENCES | DRG.NO.

THIS DRAWING IS THE PROPERTY OF MECON AND ISSUED FOR THE SPECIFIC PROJECT MENTIONED THEREIN. THIS IS NOT TO BE COPIED OR USED FOR OTHER PROJECTS UNLESS EXPRESSLY PERMITTED BY MECON.

REV / SEC — CONCURRED BY

SECTION	ARCHITECTURE
LOCATION	DELHI
DESIGNED	VIBHA
DRAWN	
CHECKED AND VERIFIED	S.BASU
APPROVED	SIG DR.R.K.DUTTA
	DATE : 01.02.2022

NORTH - EAST GAS GRID PIPELINE PROJECT

FIRE TENDER HOUSE FOR COMPRESSOR STATION AT GUWAHATI

ELEVATION & SECTION

SCALE :- 1:100 | SHEET 1 OF 1 | REV 0

DRG.NO.:-MEC/05/28/23UU/NGCS/TD/009

DRG.NO.:-MEC/05/28/23UU/NGCS/TD/010

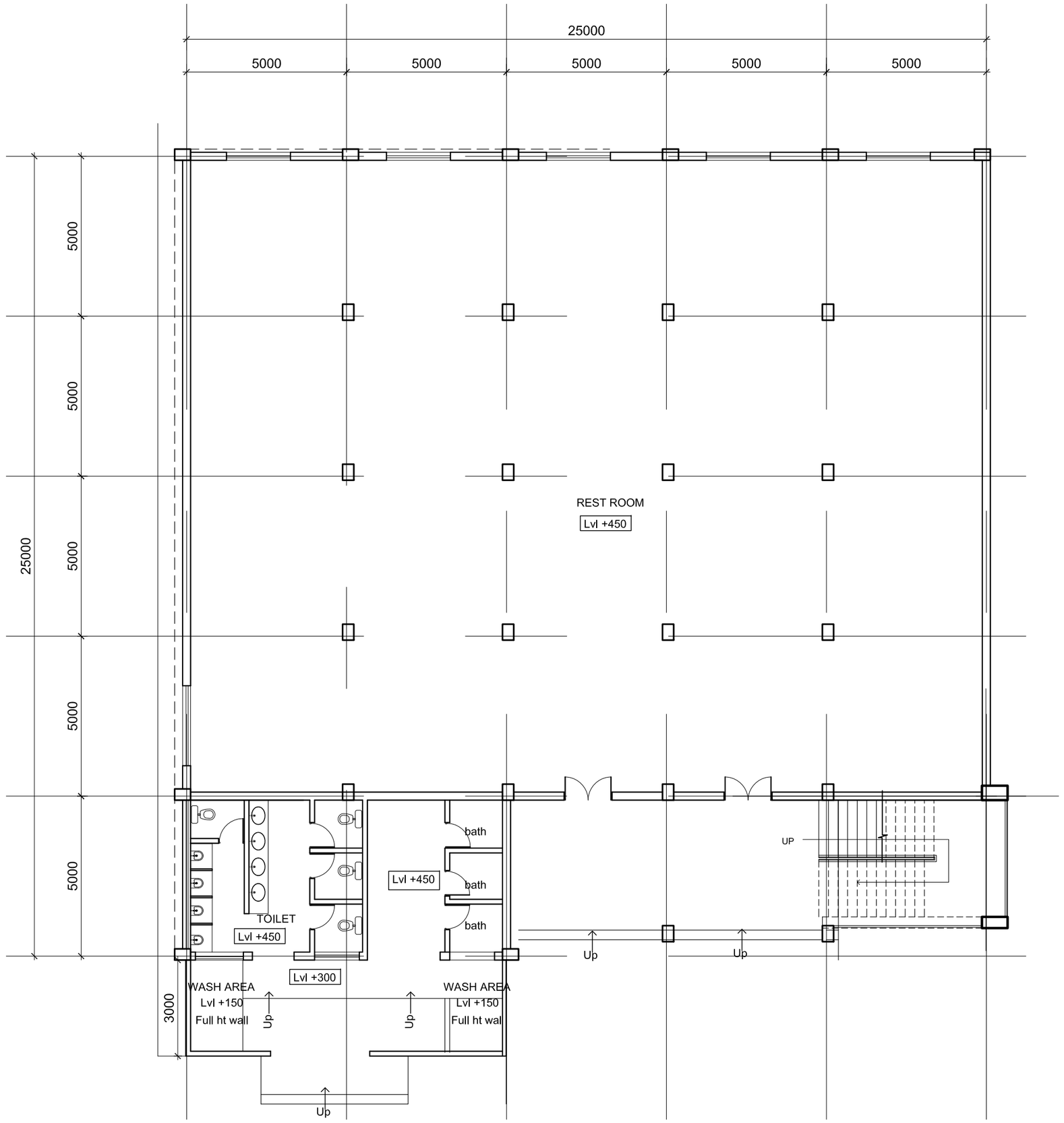

GROUND FLOOR PLAN

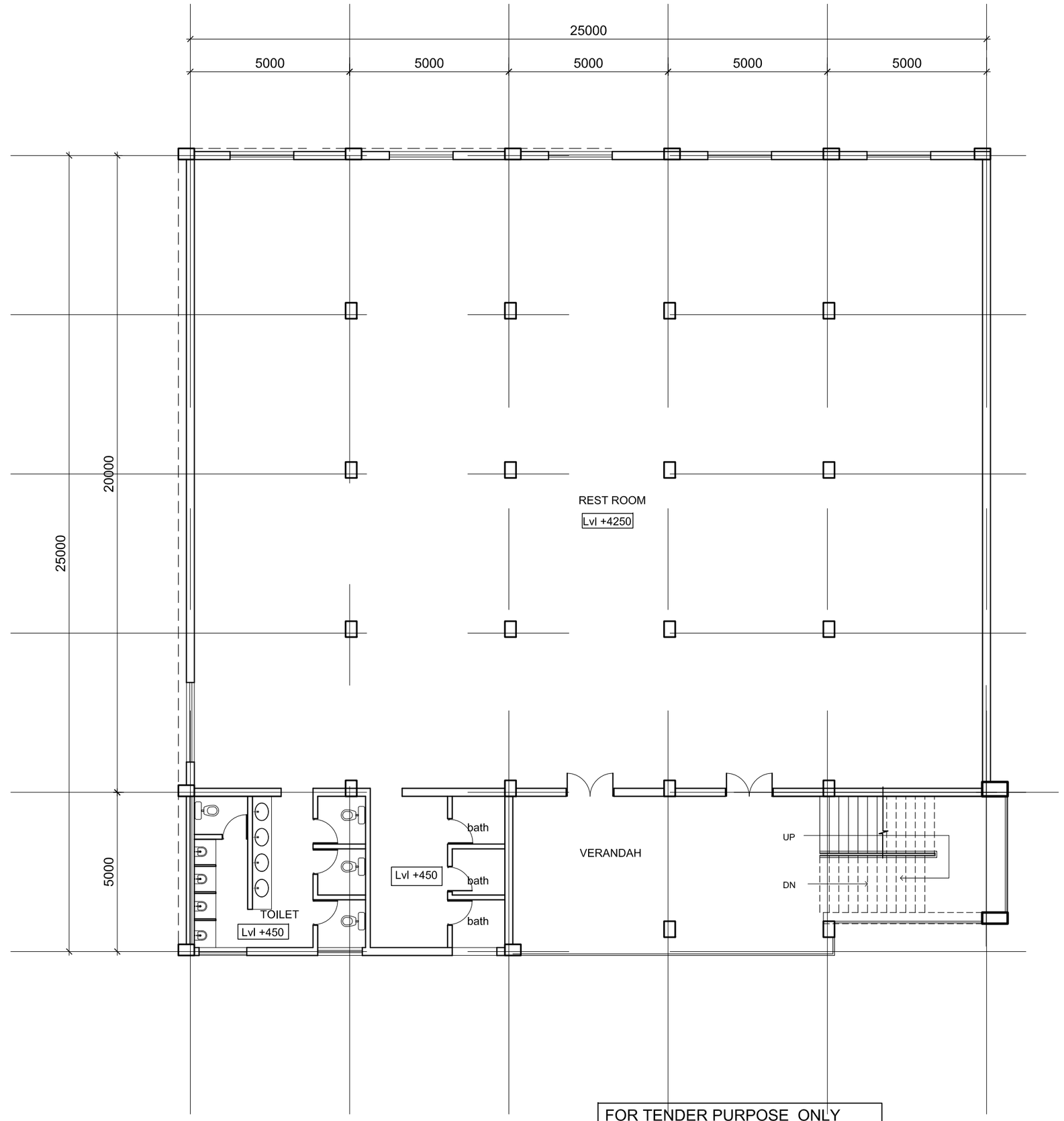

FIRST FLOOR PLAN

TOTAL AREA - 1286 Sq .m.
GROUND FLOOR-643Sq.m
FIRST FLOOR-673Sq.m

FOR TENDER PURPOSE ONLY

INDRADHANUSH GAS GRID LTD.

मेकॉन लिमिटेड

MECON LIMITED

NOTES:
1. 250MM WIDE BRICKS TO BE USED FOR WALLS.
2. ALL PAINTS TO BE ECO-FRIENDLY WITH LOW V.O.C.
3. CERAMIC TILES WITH RECYCLED CONTENTS TO BE USED.
4. LOW FLOW TOILET FIXTURES TO BE USED.
5. ±0.00 CORRESPONDS TO FINISHED ROAD TOP LEVEL
6. 12 MM DROP IN FINISH/SLAB TO BE MAINTAINED FROM INSIDE THE ROOM TO THE VERANDAH/BALCONY/TERRACE ETC.
7.1:80 MM SLOPE APPROXIMATELY TO BE MAINTAINED FOR DRAINAGE AT ROOF LVL.
8.ALL FINISH FLOOR LEVELS (EXTERNAL/INTERNAL) MUST BE LAID IN PROPER SLOPE & DIRECTION AS MAY BE REQUIRED AS/NORMAL ENGINEERING PRACTISE.

REV / SEC

CONCURRED BY

REV.NO	DATE	ZONE	DESCRIPTION	BY	VERIFIED
			REVISION		

REFERENCES | DRG.NO.

THIS DRAWING IS THE PROPERTY OF MECON AND ISSUED FOR THE SPECIFIC PROJECT MENTIONED THEREIN. THIS IS NOT TO BE COPIED OR USED FOR OTHER PROJECTS UNLESS EXPRESSLY PERMITTED BY MECON.

SECTION	ARCHITECTURE
LOCATION	DELHI
DESIGNED	VIBHA
DRAWN	VIBHA
CHECKED AND VERIFIED	S.BASU
APPROVED	SIG DR.R.K.DUTTA
	DATE : 05.02.2022

NORTH - EAST GAS GRID PIPELINE PROJECT

WORKER'S REST FOR COMPRESSOR STATION AT GUWAHATI

PLANS

SCALE :- 1:100	SHEET	REV
DRG.NO.:-MEC/05/28/23UU/NGCS/TD/010	1 OF 1	0

DRG.NO.:-MEC/05/28/23UU/NGCS/TD/011

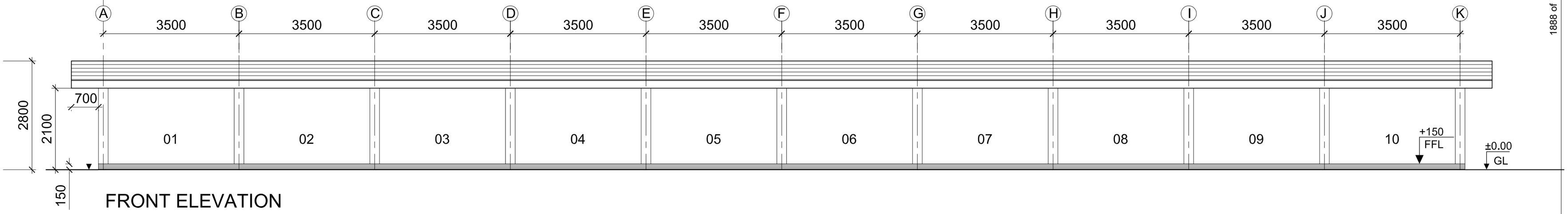

FRONT ELEVATION

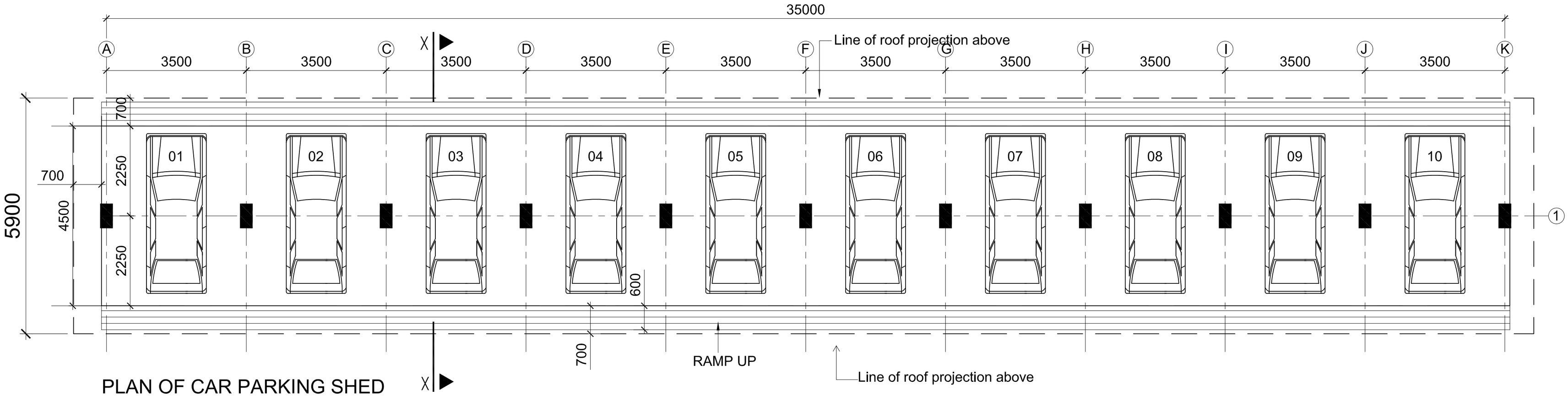

PLAN OF CAR PARKING SHED

AREA STATMENT
AREA OF SHED - 200 sq.m.

FINISHING SCHEDULE
CEMENT CONCRETE FLOORING
FLOOR MARKING COLOR/MATERIAL AS PER SPEC
RCC ROOFING, DETAILS AS PER STR.
PAINT AS PER SPEC./APPVD MAKE

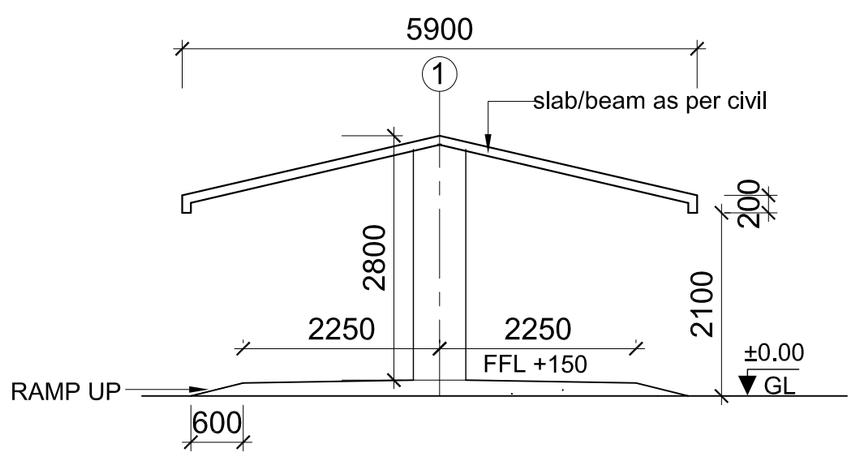

GROUND FLOOR PLAN

NOTES:
1. 250MM WIDE BRICKS TO BE USED FOR WALLS.
2. ALL PAINTS TO BE ECO-FRIENDLY WITH LOW V.O.C.
3. CERAMIC TILES WITH RECYCLED CONTENTS TO BE USED.
4. LOW FLOW TOILET FIXTURES TO BE USED.
5. ±0.00 CORRESPONDS TO FINISHED ROAD TOP LEVEL
6. 12 MM DROP IN FINISH/SLAB TO BE MAINTAINED FROM INSIDE THE ROOM TO THE VERANDAH/BALCONY/TERRACE ETC.
7.1:80 MM SLOPE APPROXIMATELY TO BE MAINTAINED FOR DRAINAGE AT ROOF LVL.
8.ALL FINISH FLOOR LEVELS (EXTERNAL/INTERNAL) MUST BE LAID IN PROPER SLOPE & DIRECTION AS MAY BE REQUIRED AS/NORMAL ENGINEERING PRACTISE.

REV	SEC	CONCURRED BY
△		

REV.NO	DATE	ZONE	DESCRIPTION	BY	VERIFIED
			REVISION		

REFERENCES | DRG.NO.

THIS DRAWING IS THE PROPERTY OF MECON AND ISSUED FOR THE SPECIFIC PROJECT MENTIONED THEREIN. THIS IS NOT TO BE COPIED OR USED FOR OTHER PROJECTS UNLESS EXPRESSLY PERMITTED BY MECON.

FOR TENDER PURPOSE ONLY

INDRADHANUSH GAS GRID LTD.

मेकॉन लिमिटेड

MECON LIMITED

SECTION	ARCHITECTURE
LOCATION	DELHI
DESIGNED	VIBHA
DRAWN	VIBHA
CHECKED AND VERIFIED	S.BASU
APPROVED	SIG DR.R.K.DUTTA
	DATE : 01.02.2022

NORTH - EAST GAS GRID PIPELINE PROJECT

CAR PARKING FOR COMPRESSOR STATION AT GUWAHATI
GROUND FLOOR PLAN

SCALE :- 1:100	SHEET	REV
DRG.NO.:-MEC/05/28/23UU/NGCS/TD/011	1 OF 1	0

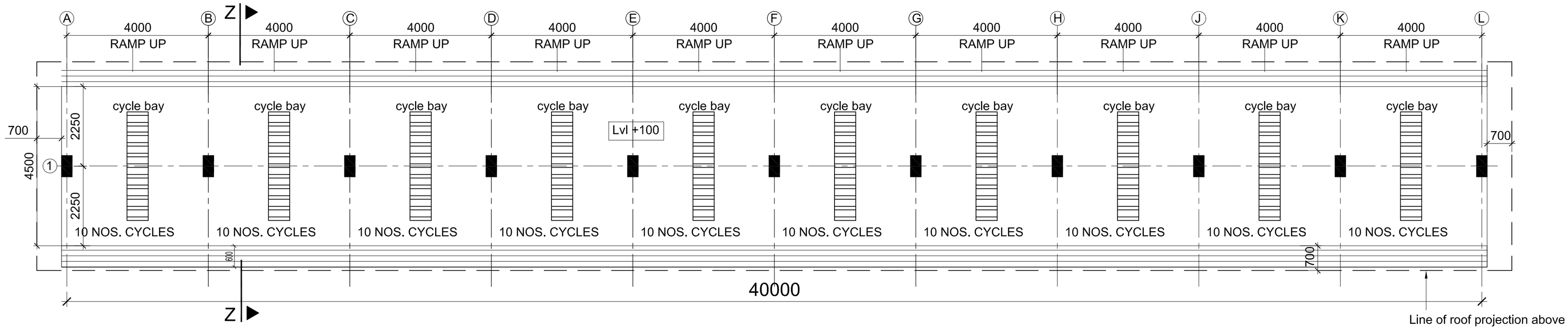

PLAN OF BYCYCLE PARKING SHED

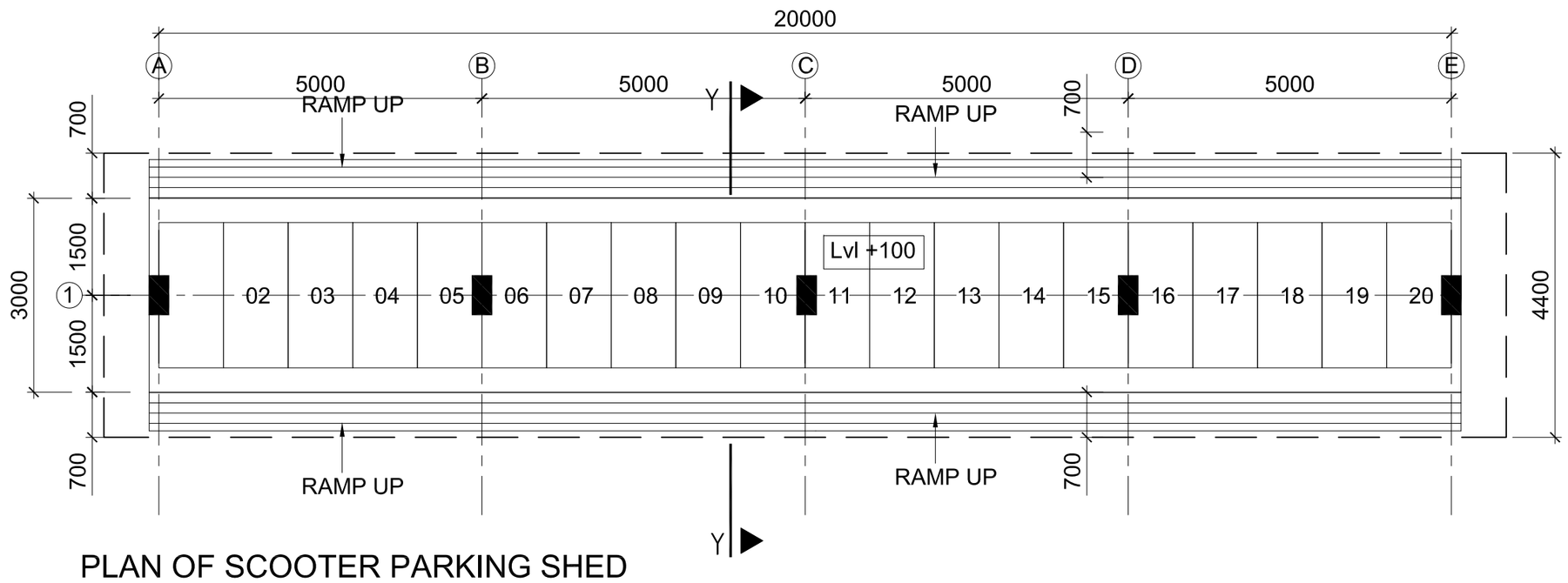

PLAN OF SCOOTER PARKING SHED

AREA STATMENT
AREA OF SHED - 246 sq.m.

FINISHING SCHEDULE
CEMENT CONCRETE FLOORING
FLOOR MARKING COLOR/MATERIAL AS PER SPEC
RCC ROOFING, DETAILS AS PER STR.
PAINT AS PER SPEC./APPVD MAKE

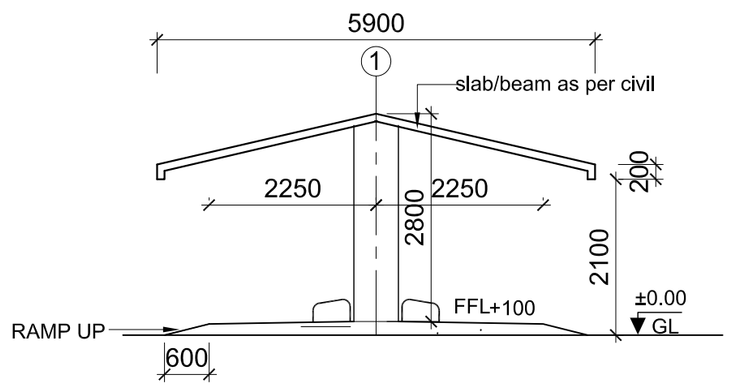

SECTION (TYP)
(cycle & scooter parking)

AREA STATMENT
AREA OF SHED - 95 sq.m.

FINISHING SCHEDULE
CEMENT CONCRETE FLOORING
FLOOR MARKING COLOR/MATERIAL AS PER SPEC
RCC ROOFING, DETAILS AS PER STR.
PAINT AS PER SPEC./APPVD MAKE

NOTES:
1. 250MM WIDE BRICKS TO BE USED FOR WALLS.
2. ALL PAINTS TO BE ECO-FRIENDLY WITH LOW V.O.C.
3. CERAMIC TILES WITH RECYCLED CONTENTS TO BE USED.
4. LOW FLOW TOILET FIXTURES TO BE USED.
5. ±0.00 CORRESPONDS TO FINISHED ROAD TOP LEVEL
6. 12 MM DROP IN FINISH/SLAB TO BE MAINTAINED FROM INSIDE THE ROOM TO THE VERANDAH/BALCONY/TERRACE ETC.
7. 1:80 MM SLOPE APPROXIMATELY TO BE MAINTAINED FOR DRAINAGE AT ROOF LVL.
8. ALL FINISH FLOOR LEVELS (EXTERNAL/INTERNAL) MUST BE LAID IN PROPER SLOPE & DIRECTION AS MAY BE REQUIRED AS/NORMAL ENGINEERING PRACTISE.

REV | SEC | CONCURRED BY

REV.NO	DATE	ZONE	DESCRIPTION	BY	VERIFIED
			REVISION		

REFERENCES | DRG.NO.

THIS DRAWING IS THE PROPERTY OF MECON AND ISSUED FOR THE SPECIFIC PROJECT MENTIONED THEREIN. THIS IS NOT TO BE COPIED OR USED FOR OTHER PROJECTS UNLESS EXPRESSLY PERMITTED BY MECON.

FOR TENDER PURPOSE ONLY

INDRADHANUSH GAS GRID LTD.

मेकॉन लिमिटेड
MECON LIMITED

SECTION	ARCHITECTURE
LOCATION	DELHI
DESIGNED	VIBHA
DRAWN	VIBHA
CHECKED AND VERIFIED	S.BASU
APPROVED	SIG DR.R.K.DUTTA
	DATE : 01.02.2022

NORTH - EAST GAS GRID PIPELINE PROJECT

SCOOTER & CYCLE PARKING FOR COMPRESSOR STATION AT GUWAHATI
GROUND FLOOR PLAN

SCALE :- 1:100 | SHEET 1 OF 1 | REV 0

DRG.NO.:-MEC/05/28/23UU/NGCS/TD/012

DRG.NO.:-MEC/05/28/23UU/NGCS/TD/013

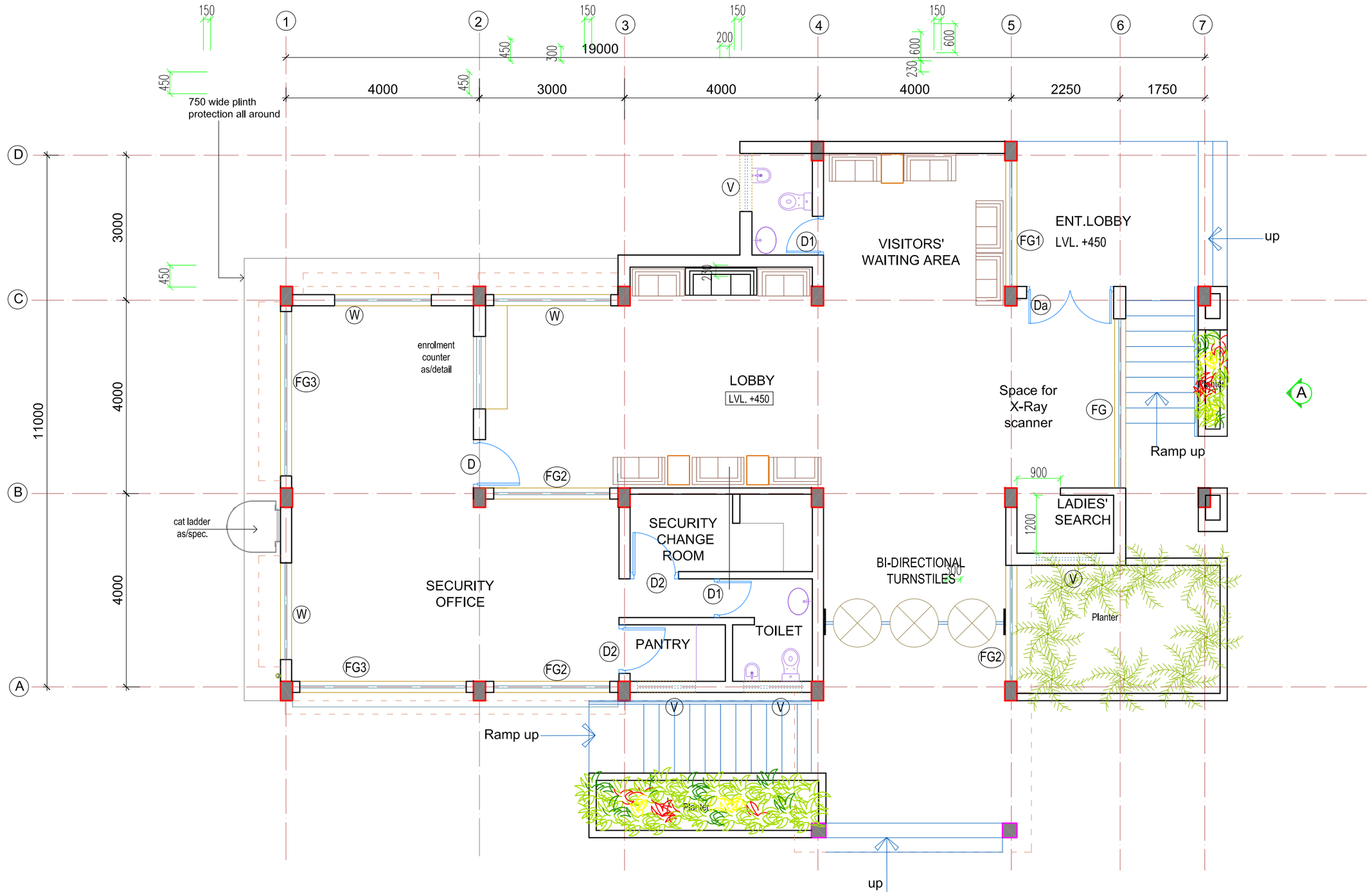

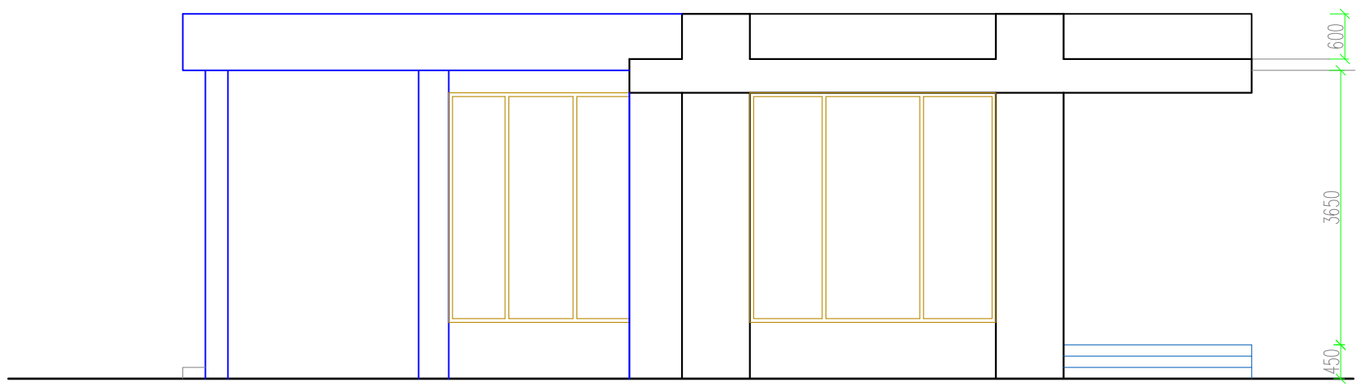

ELEVATION AT 'A'

SCHEDULE OF OPENINGS

S.NO.	TYPE	MASONRY OPENING W X H	LEVELS SILL	LEVELS LINTEL	DESCRIPTION	NO.	REMARK
1	Da	1800X2700	-	2700	Frameless fully glazed door, double leaf of approved manufacturer's spec.	1	
2	D	1000X2700	-	2700	Aluminium section,glazed door, single leaf of approved manufacturer's spec.	1	
3	D1	800X2100	-	2100	PVC door	2	
4	D2	1000X2700		2700	Flush door	2	
5	W	2000X1800	-	2700	Aluminium section, glazed sliding window, partly fixed partly openable with float glass as/spec. of approved manufacturer's spec.	3	
6	FG	3500X2400	300	2700	Aluminium section, fixed glazing	1	
7	FG1	2100X2400				1	
8	FG2	2400X2400				3	
9	FG3	3400X2400				2	
10	V	1200X600	2100	2700	Aluminium section, glazed ventilator, top hung, partly openable partly fixed with float glass & exhaust fan as per spec of approved manufacturer's spec.	3	

calcium silicate False ceiling

SCHEDULE OF FINISHES (INSIDE)

S. NO.	ROOM NAME	WALL	CEILING	FLOORING	SKIRTING/DADO
1	LOBBY/ STEPS/RAMP	Acrylic Washable Distemper	Acrylic Washable Distemper	Granite	
2	VISITORS' WAITING AREA	Acrylic Washable Distemper		Double charged Vitrified Tiles (800X800)	
3	SECURITY OFFICE	Acrylic Washable Distemper	False Ceiling		
4	SECURITY CHANGE ROOM	Acrylic Washable Distemper	Acrylic Washable Distemper		
5	TOILET & PANTRY	-	Acrylic Washable Distemper	Anti Skid Ceramic tile	Ceramic tile (600X300) upto lintel lvl

AREA-197Sq.m

FOR TENDER PURPOSE ONLY

INDRADHANUSH GAS GRID LTD.

मेकॉन लिमिटेड

MECON LIMITED

NOTES:
1. ALL DIMENSIONS AND LEVELS ARE IN mm, (UNLESS MENTIONED OTHERWISE)
2. ALL EXTERNAL WALLS ARE 250 MM. THICK UNLESS OTHERWISE MENTIONED.
3. ALL CHHAJJA/ CANOPY PROJECTIONS SHALL HAVE DRIP MOULD GROOVES UNDERNEATH ALL ALONG PERIPHERY.
4. ALL CHHAJJA/ CANOPY PROJECTIONS SHALL HAVE 50 DIA GJ SPOUT.
5. ELECTRICAL AND SERVICES DETAIL TO BE AS PER APPROVED SPEC. AND DWG.
6. SKIRTING HEIGHT IN ROOMS SHALL BE 100MM.
7. ALL DRAWINGS TO BE READ IN CONJUNCTION WITH CIVIL DRAWINGS.
8. 40 THICK DPC AT FLOOR LEVEL ALL AROUND.
9. SUITABLE SEALING ARRANGEMENT SHALL BE PROVIDED AT CABLE ENTRY POINTS TO PREVENT ENTRY OF RODENTS ETC.
10. ALL BUILDING LEVELS INDICATED IN THE DRAWINGS ARE ROUGH CONCRETE LEVELS.
11. ±0.00 CORRESPONDS TO FINISHED ROAD TOP LEVEL
12. 12 MM DROP IN FINISHISLAB TO BE MAINTAINED FROM INSIDE THE ROOM TO THE VERANDAH/BALCONY/TERRACE ETC
13.1:80 MM SLOPE APPROXIMATELY TO BE MAINTAINED FOR DRAINAGE AT ROOF LVL.

REV	DATE	ZONE	DESCRIPTION	BY	VERIFIED
			REVISION		

REFERENCES | DRG.NO.

THIS DRAWING IS THE PROPERTY OF MECON AND ISSUED FOR THE SPECIFIC PROJECT MENTIONED THEREIN. THIS IS NOT TO BE COPIED OR USED FOR OTHER PROJECTS UNLESS EXPRESSLY PERMITTED BY MECON.

CONCURRED BY

SECTION	ARCHITECTURE
LOCATION	DELHI
DESIGNED	VIBHA MISRA
DRAWN	VIBHA MISRA
CHECKED AND VERIFIED	SOMA
APPROVED	SIG Dr.R.K.Dutta
	DATE :05.02.2022

NORTH - EAST GAS GRID PIPELINE PROJECT

BIOMETRIC SECURITY BLOCK

PLANS, ELEVATION,SCHEDULE OF OPENINGS & KEY PLAN

SCALE :- 1:100 | SHEET 1 OF 1 | REV 0

DRG.NO.:-MEC/05/28/23UU/NGCS/TD/013

DRG.NO.:-MEC/05/28/23UU/NGCS/TD/014

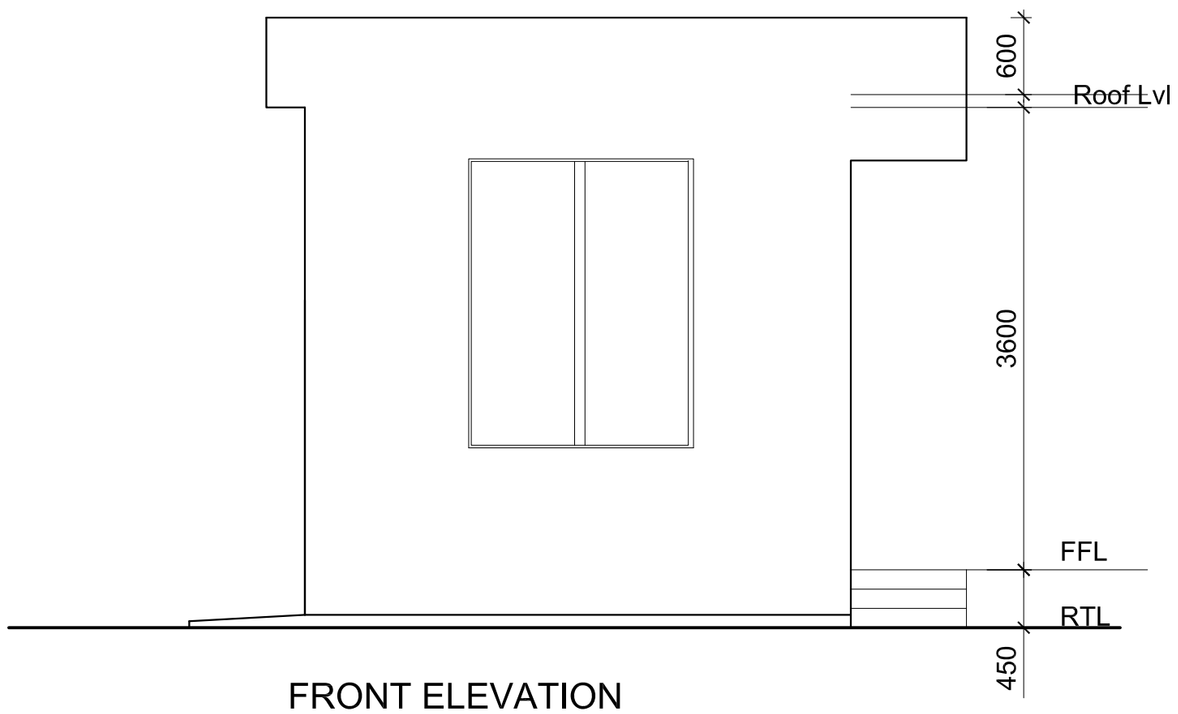

FRONT ELEVATION

SCHEDULE OF OPENINGS

S.NO.	TYPE	MASONRY OPENING (WXH)	LEVELS		DESCRIPTION	NO.	REMARKS
			SILL FROM FFL	LINTEL FROM FFL			
1	D	1000X -	-	beam bottom	Aluminium Door	1	
2	D1	800X -	-		high grade pvc door, single leaf	1	
3	W	1800X -	900		Aluminium section, glazed sliding window, with glass as/spec. of approved manufacturer's spec.	2	
4	W1	1000X -	900			1	
5	V	750X -	1800		Aluminium section, glazed ventilator, top hung, partly openable partly fixed with float glass & provision of exhaust fan as per spec.of approved manufacturer's specification.	1	

SCHEDULE OF FINISHES (INSIDE)

S. NO.	ROOM NAME	WALL	CEILING	FLOORING	SKIRTING/DADO
1	GUARD ROOM	Acrylic Washable Distemper-eco-friendly paint with low VOC		Vitrified tiles	
3	Toilet			Anti-skid matt finish ceramic tile(300X300)	Ceramic tiles upto +2100 from FFL(600 x 300)
EXTERNAL FINISH - Exterior emulsion paints of approved brand & colour-Eco friendly paint with low volatile organic compounds					

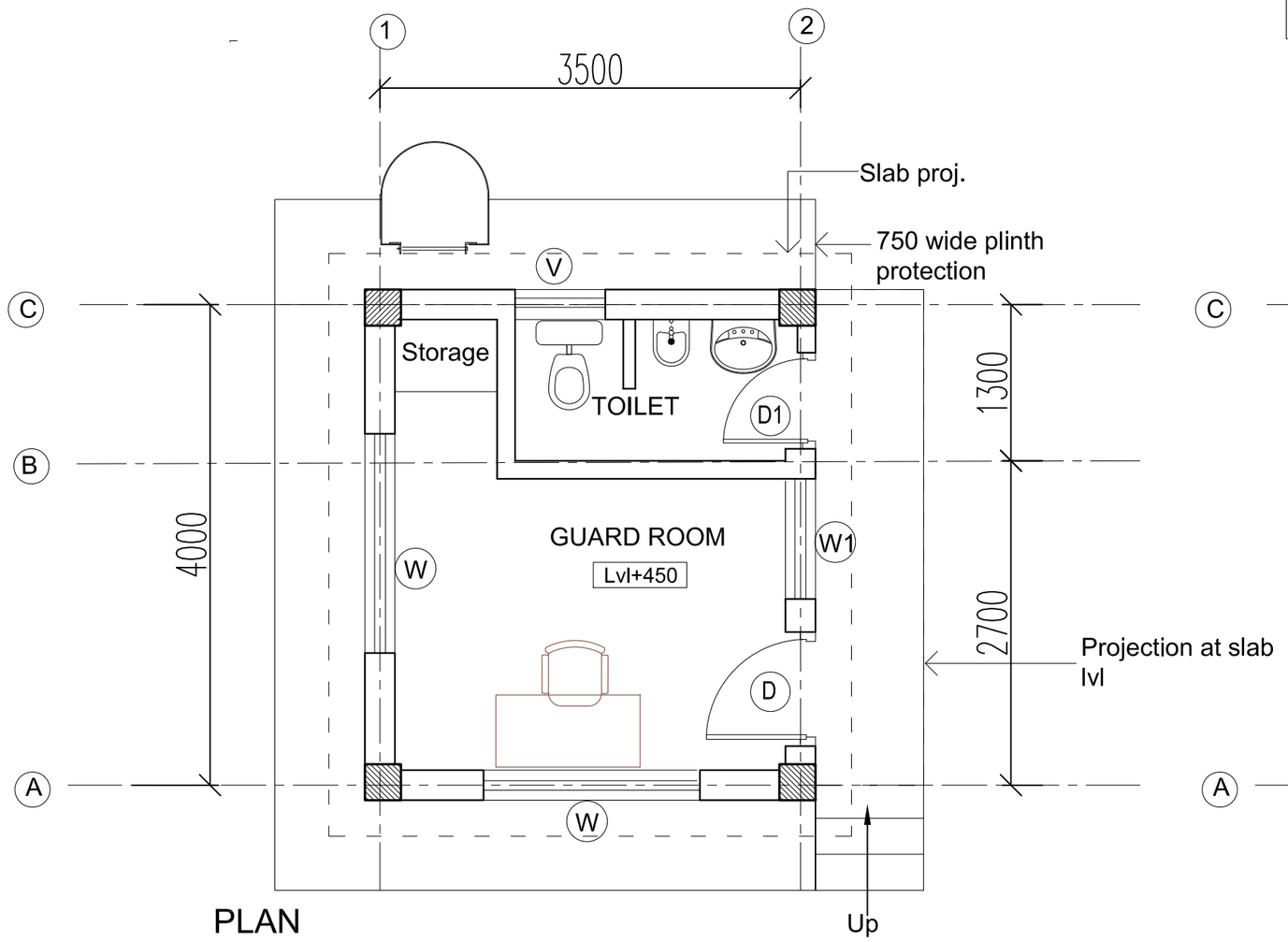

PLAN

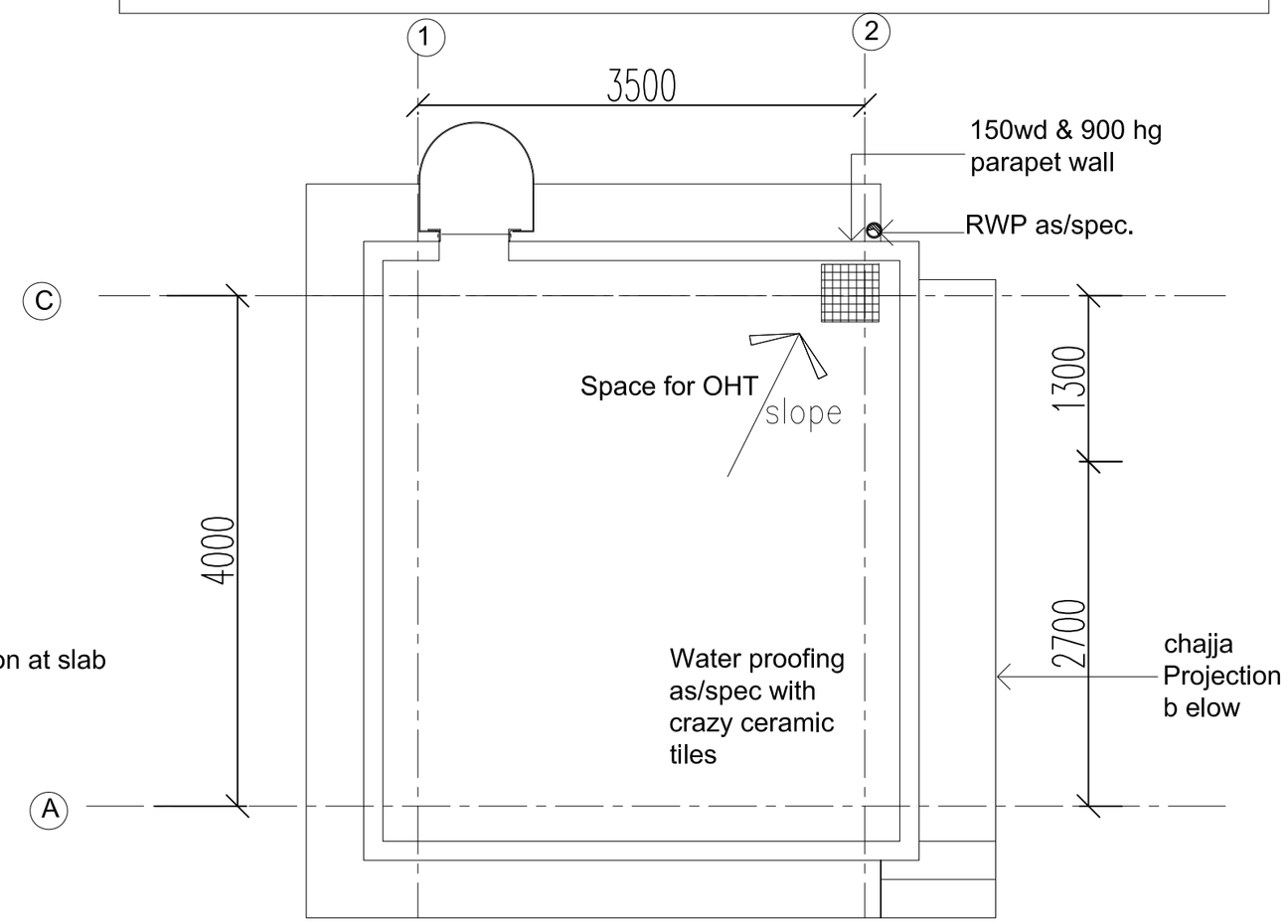

ROOF PLAN

AREA : 16 sq.m.

NOTES:
1. ALL DIMENSIONS AND LEVELS ARE IN mm, (UNLESS MENTIONED OTHERWISE)
2. ALL EXTERNAL WALLS ARE 250 MM. THICK UNLESS OTHERWISE MENTIONED.
3. ALL CHHAJJA/ CANOPY PROJECTIONS SHALL HAVE DRIP MOULD GROOVES UNDERNEATH ALL ALONG PERIPHERY.
4. ALL CHHAJJA/ CANOPY PROJECTIONS SHALL HAVE 50 DIA G.I. SPOUT.
5. ELECTRICAL AND SERVICES DETAIL TO BE AS PER APPROVED SPEC. AND DWG.
6. SKIRTING HEIGHT IN ROOMS SHALL BE 100MM.
7. ALL DRAWINGS TO BE READ IN CONJUNCTION WITH CIVIL DRAWINGS.
8. 40 THICK DPC AT FLOOR LEVEL ALL AROUND.
9. SUITABLE SEALING ARRANGEMENT SHALL BE PROVIDED AT CABLE ENTRY POINTS TO PREVENT ENTRY OF RODENTS ETC.
10. ALL BUILDING LEVELS INDICATED IN THE DRAWINGS ARE ROUGH CONCRETE LEVELS.
11. ±0.00 CORRESPONDS TO FINISHED ROAD TOP LEVEL
12. 12 MM DROP IN FINISH/SLAB TO BE MAINTAINED FROM INSIDE THE ROOM TO THE VERANDAH/BALCONY/TERRACE ETC
13.1:80 MM SLOPE APPROXIMATELY TO BE MAINTAINED FOR DRAINAGE AT ROOF LVL.

REV	DATE	ZONE	DESCRIPTION	BY	VERIFIED
			REVISION		

REFERENCES | DRG.NO.

THIS DRAWING IS THE PROPERTY OF MECON AND ISSUED FOR THE SPECIFIC PROJECT MENTIONED THEREIN. THIS IS NOT TO BE COPIED OR USED FOR OTHER PROJECTS UNLESS EXPRESSLY PERMITTED BY MECON.

REV / SEC

CONCURRED BY

FOR TENDER PURPOSE ONLY

INDRADHANUSH GAS GRID LTD.

मेकॉन लिमिटेड

MECON LIMITED

SECTION	ARCHITECTURE
LOCATION	DELHI
DESIGNED	VIBHA MISRA
DRAWN	VIBHA MISRA
CHECKED AND VERIFIED	SOMA
APPROVED	SIG Dr.R.K.Dutta DATE :05.02.2022

NORTH - EAST GAS GRID PIPELINE PROJECT

GUARD ROOM

PLANS, ELEVATION &SCHEDULES

SCALE :- 1:100 | SHEET 1 OF 1 | REV 0

DRG.NO.:-MEC/05/28/23UU/NGCS/TD/014

DRG.NO.:-MEC/05/28/23UU/NGCS/TD/015

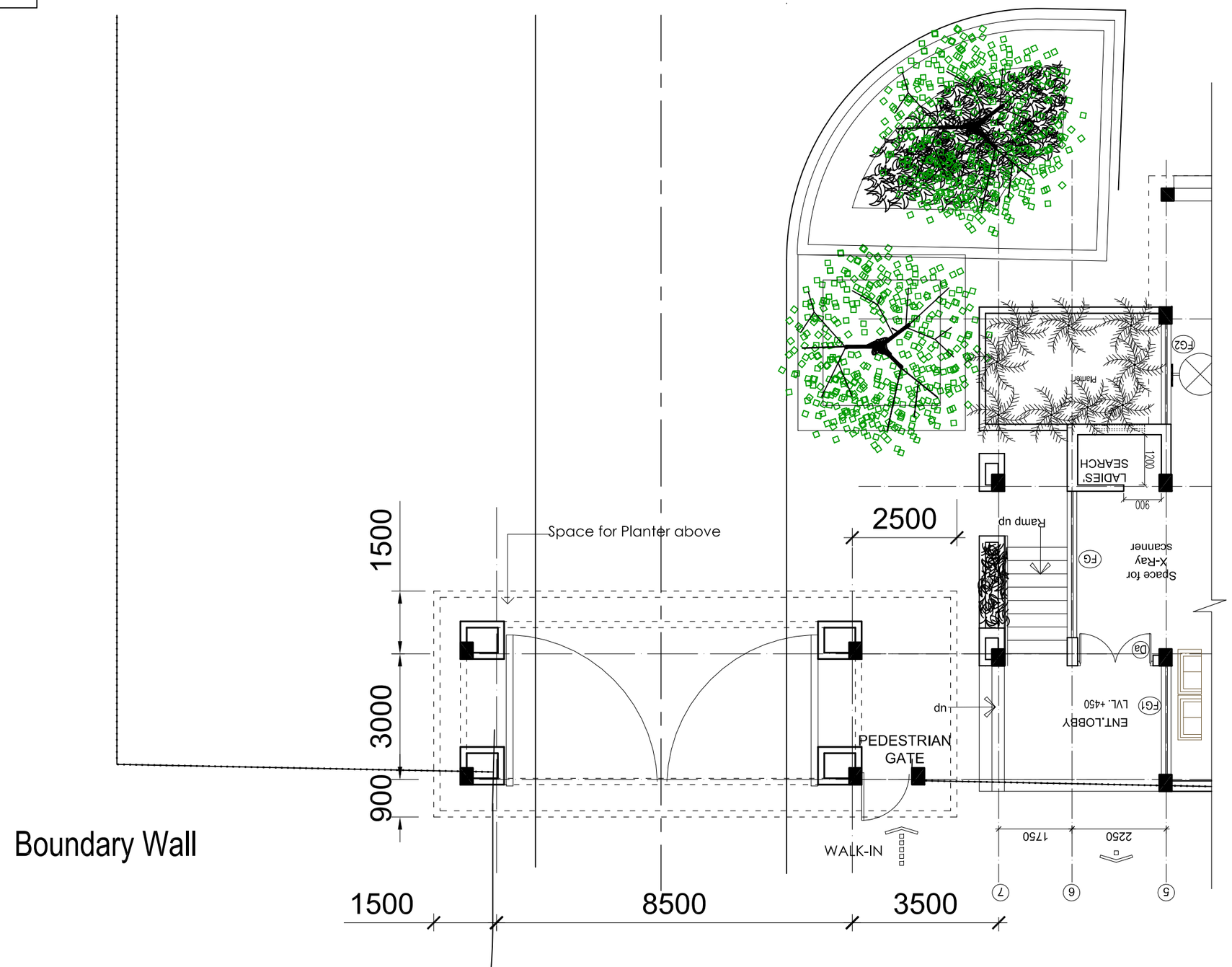

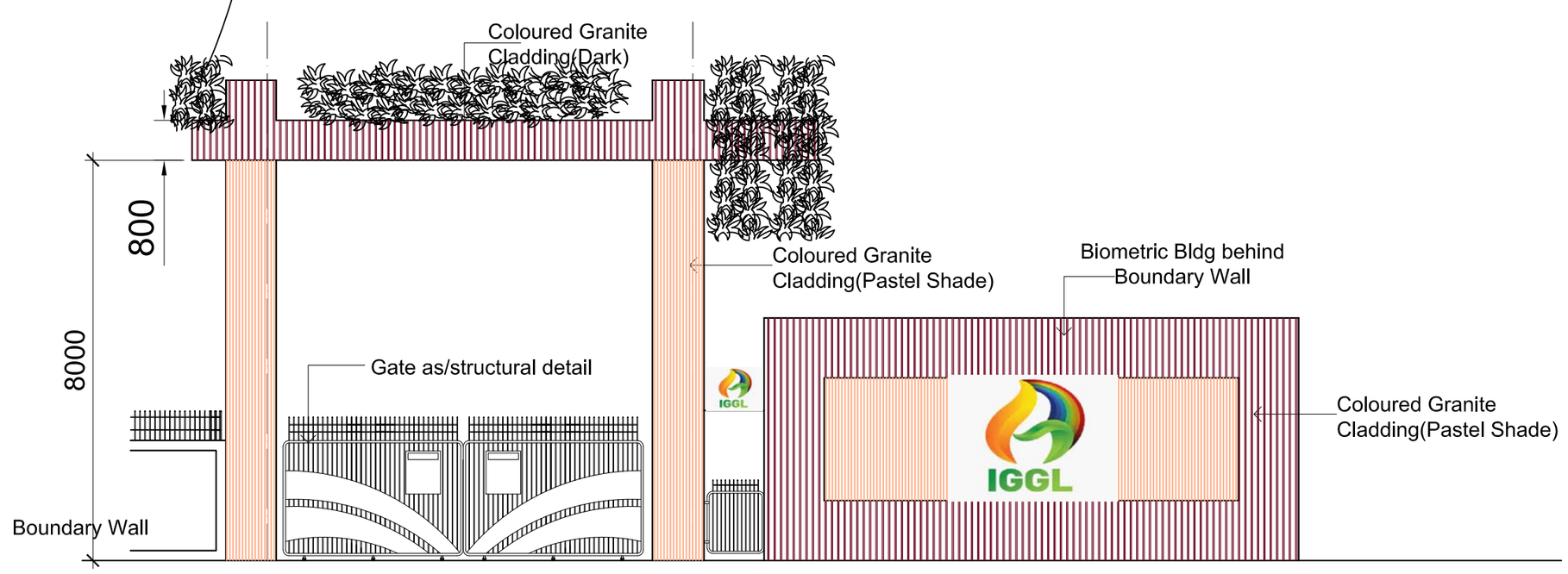

FOR TENDER PURPOSE ONLY

INDRADHANUSH GAS GRID LTD.

मेकॉन लिमिटेड

MECON LIMITED

NOTES:
1. ALL DIMENSIONS AND LEVELS ARE IN mm. (UNLESS MENTIONED OTHERWISE)
2. ALL EXTERNAL WALLS ARE 250 MM. THICK UNLESS OTHERWISE MENTIONED.
3. ALL CHHAJJA/ CANOPY PROJECTIONS SHALL HAVE DRIP MOULD GROOVES UNDERNEATH ALL ALONG PERIPHERY.
4. ALL CHHAJJA/ CANOPY PROJECTIONS SHALL HAVE 50 DIA G.I. SPOUT.
5. ELECTRICAL AND SERVICES DETAIL TO BE AS PER APPROVED SPEC. AND DWG.
6. SKIRTING HEIGHT IN ROOMS SHALL BE 100MM.
7. ALL DRAWINGS TO BE READ IN CONJUNCTION WITH CIVIL DRAWINGS.
8. 40 THICK DPC AT FLOOR LEVEL ALL AROUND.
9. SUITABLE SEALING ARRANGEMENT SHALL BE PROVIDED AT CABLE ENTRY POINTS TO PREVENT ENTRY OF RODENTS ETC.
10. ALL BUILDING LEVELS INDICATED IN THE DRAWINGS ARE ROUGH CONCRETE LEVELS.
11. ±0.00 CORRESPONDS TO FINISHED ROAD TOP LEVEL
12. 12 MM DROP IN FINISHSLAB TO BE MAINTAINED FROM INSIDE THE ROOM TO THE VERANDAH/BALCONY/TERRACE ETC
13.1:80 MM SLOPE APPROXIMATELY TO BE MAINTAINED FOR DRAINAGE AT ROOF LVL.

REV	DATE	ZONE	DESCRIPTION	BY	VERIFIED
			REVISION		

REFERENCES | DRG.NO.

THIS DRAWING IS THE PROPERTY OF MECON AND ISSUED FOR THE SPECIFIC PROJECT MENTIONED THEREIN. THIS IS NOT TO BE COPIED OR USED FOR OTHER PROJECTS UNLESS EXPRESSLY PERMITTED BY MECON.

CONCURRED BY

SECTION	ARCHITECTURE
LOCATION	DELHI
DESIGNED	VIBHA MISRA
DRAWN	VIBHA MISRA
CHECKED AND VERIFIED	SOMA
APPROVED	SIG Dr.R.K.Dutta
	DATE :05.02.2022

NORTH - EAST GAS GRID PIPELINE PROJECT

GATE COMPLEX

PLANS & ELEVATION

SCALE :- 1:100 | SHEET 1 OF 1 | REV 0

DRG.NO.:-MEC/05/28/23UU/NGCS/TD/015

DRG.NO.:-MEC/05/28/23UU/NGCS/TD/016

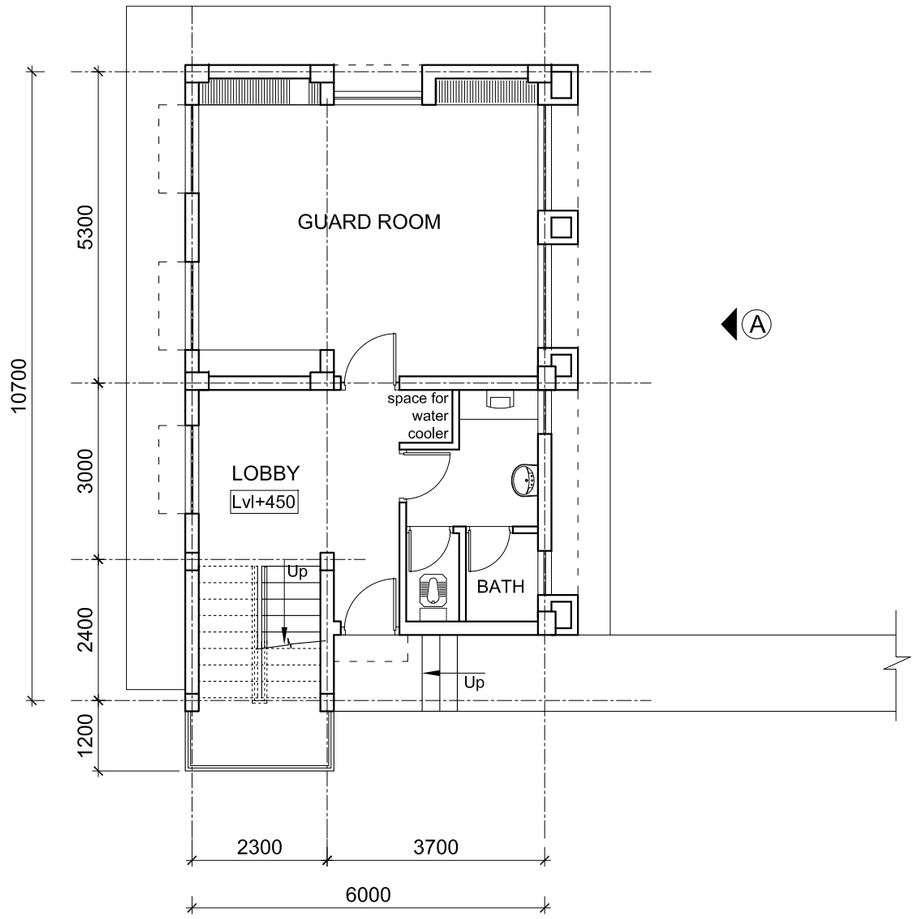

GROUND FLOOR PLAN

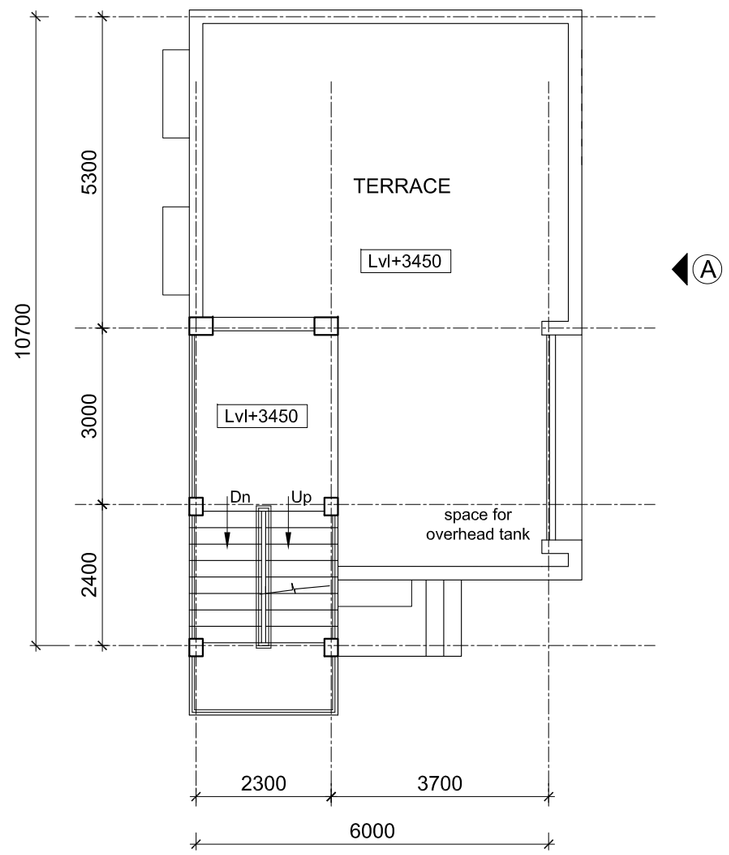

PLAN AT FIRST FLOOR LEVEL

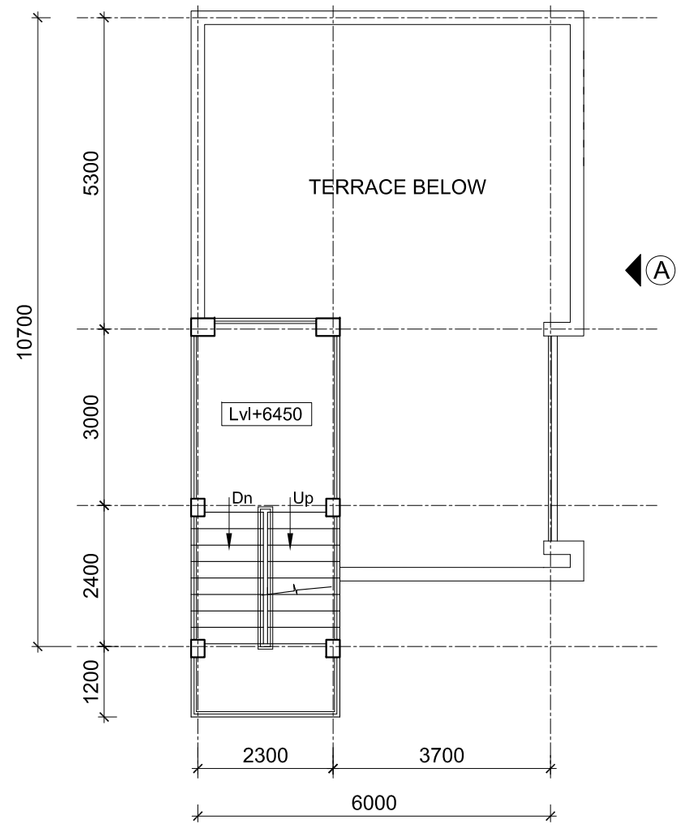

PLAN AT SECOND FLOOR LEVEL

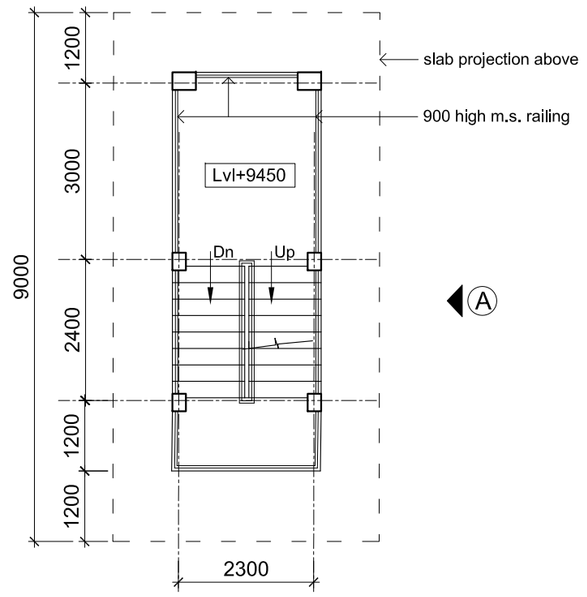

PLAN AT THIRD FLOOR LEVEL

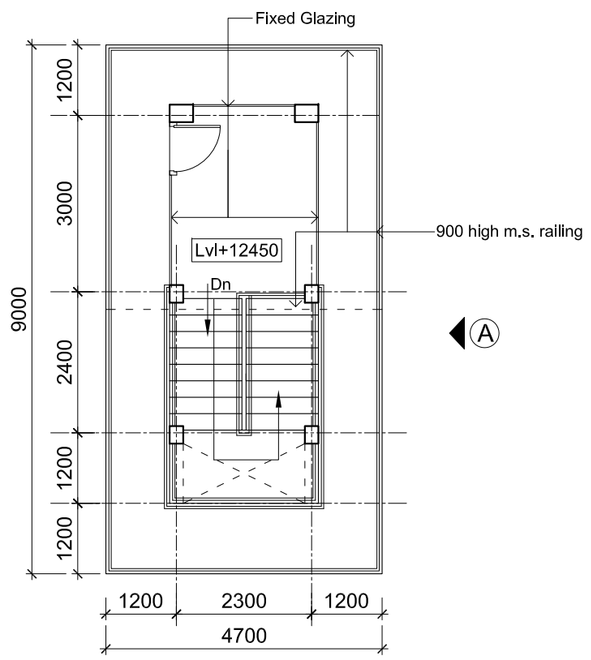

PLAN AT FOURTH FLOOR LEVEL

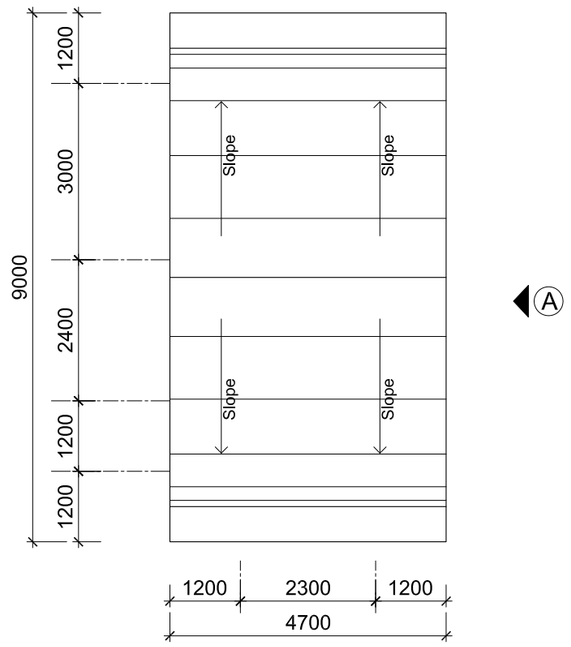

ROOF PLAN

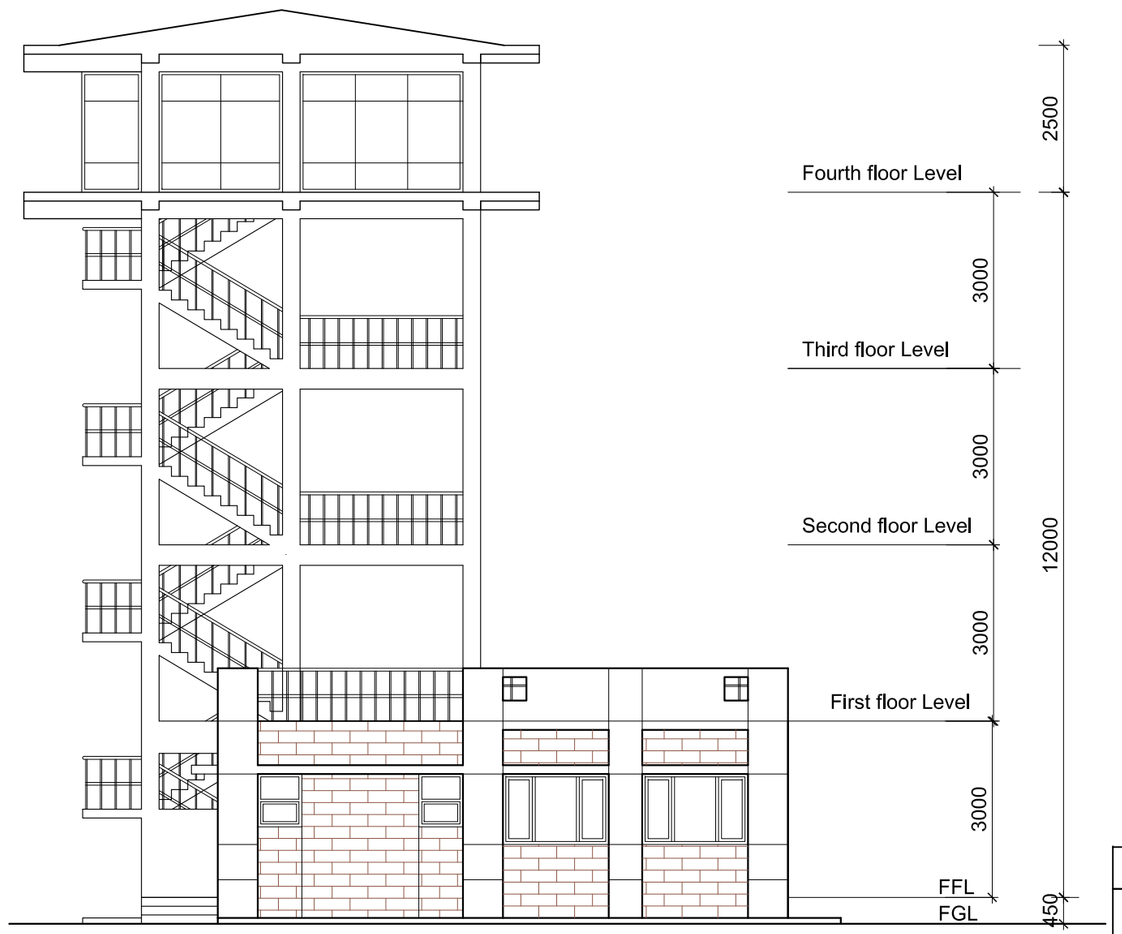

ELEVATION AT 'A'

SCHEDULE OF FINISHES(OUTSIDE) - Exterior emulsion paint

NOTES:
1. 250MM WIDE BRICKS TO BE USED FOR WALLS.
2. ALL PAINTS TO BE ECO-FRIENDLY WITH LOW V.O.C.
3. CERAMIC TILES WITH RECYCLED CONTENTS TO BE USED.
4. LOW FLOW TOILET FIXTURES TO BE USED.
5. ±0.00 CORRESPONDS TO FINISHED ROAD TOP LEVEL
6. 12 MM DROP IN FINISH/SLAB TO BE MAINTAINED FROM INSIDE THE ROOM TO THE VERANDAH/BALCONY/TERRACE ETC.
7.1:80 MM SLOPE APPROXIMATELY TO BE MAINTAINED FOR DRAINAGE AT ROOF LVL.
8.ALL FINISH FLOOR LEVELS (EXTERNAL/INTERNAL) MUST BE LAID IN PROPER SLOPE & DIRECTION AS MAY BE REQUIRED AS/NORMAL ENGINEERING PRACTISE.

REV	SEC	CONCURRED BY
△		

REV.NO	DATE	ZONE	DESCRIPTION	BY	VERIFIED
			REVISION		

REFERENCES | DRG.NO.

THIS DRAWING IS THE PROPERTY OF MECON AND ISSUED FOR THE SPECIFIC PROJECT MENTIONED THEREIN. THIS IS NOT TO BE COPIED OR USED FOR OTHER PROJECTS UNLESS EXPRESSLY PERMITTED BY MECON.

FOR TENDER PURPOSE ONLY

INDRADHANUSH GAS GRID LTD.

मेकॉन लिमिटेड

MECON LIMITED

SECTION	ARCHITECTURE
LOCATION	DELHI
DESIGNED	VIBHA
DRAWN	VIBHA
CHECKED AND VERIFIED	S.BASU
APPROVED	SIG DR.R.K.DUTTA
	DATE : 03.02.2022

NORTH - EAST GAS GRID PIPELINE PROJECT

GUARD ROOM CUM WATCH TOWER FOR COMPRESSOR STATION AT GUWAHATI

PLANS & ELEVATION

SCALE :- 1:100 | SHEET 1 OF 1 | REV 0

DRG.NO.:-MEC/05/28/23UU/NGCS/TD/016

DRG. NO. MEC/05/28/23UU/NGCS/TD/017

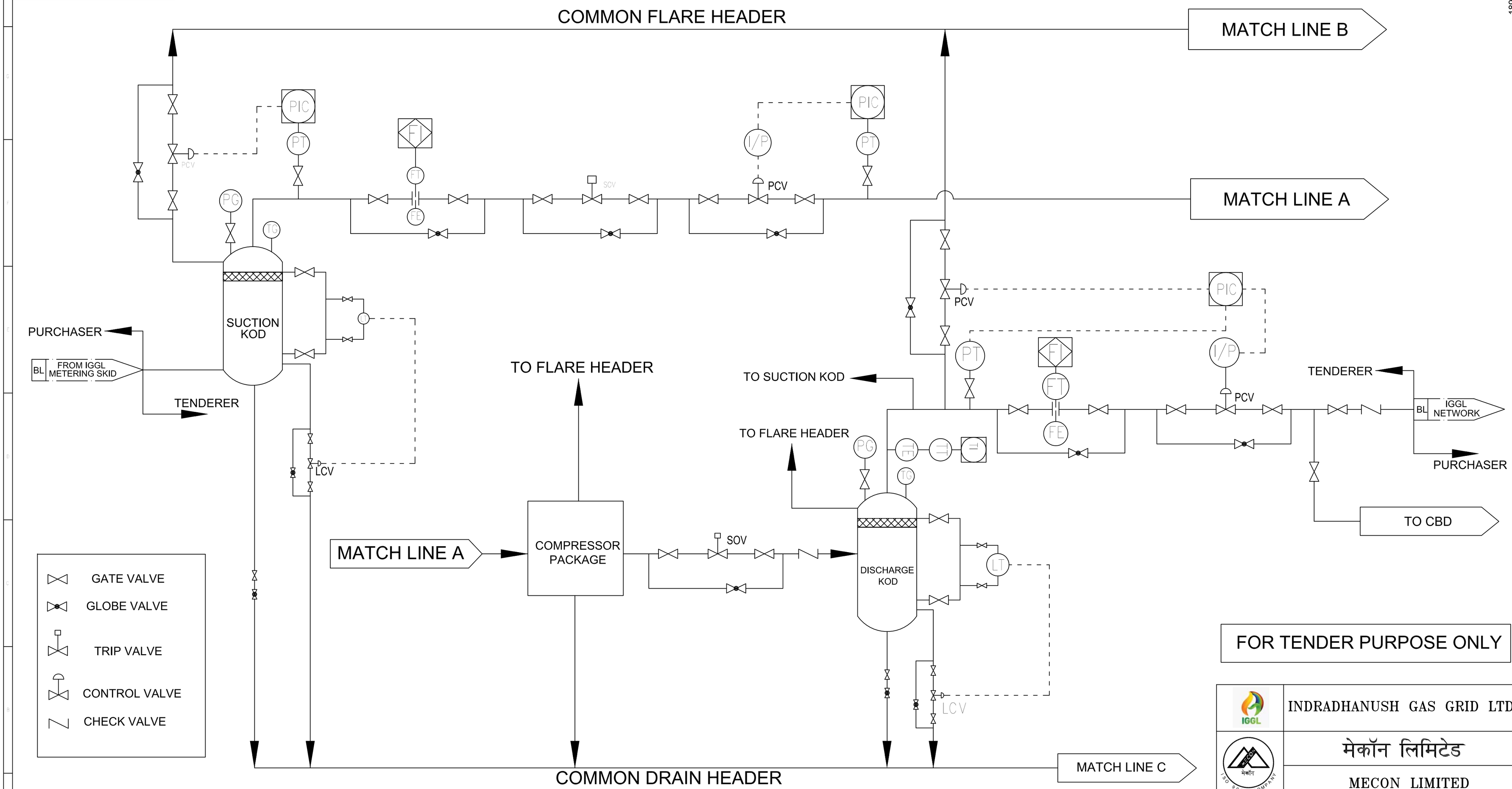

FOR TENDER PURPOSE ONLY

INDRADHANUSH GAS GRID LTD.

मेकॉन लिमिटेड

MECON LIMITED

1. P&ID IS INDICATIVE WITH BARE MINIMUM PIPES, VALVES, FITTINGS AND INSTRUMENTS.
2. TENDERER SHALL PREPARE DETAILED P&ID.
3. OPERATION, CONTROL & MONITORING OF ENTIRE PLANT AND EQUIPMENT SHALL BE CARRIED OUT FROM CENTRAL PLC/ DCS.

REV. NO.	DATE	DESCRIPTION	BY	VERIFIED
1	13.08.2021	PILOT AREA OPTIMIZATION	ESR	ASHUTOSH

REFERENCES | DOC NO./DRG. NO.

© Copyright MECON LIMITED – All rights reserved.
THIS DRAWING IS THE PROPERTY OF MECON AND ISSUED FOR THE SPECIFIC PROJECT MENTIONED THEREON. THIS IS NOT TO BE COPIED OR USED FOR OTHER PROJECTS UNLESS EXPRESSLY PERMITTED BY MECON.

SECTION	PP & EE
LOCATION	RANCHI
DESIGNED	S.BANERJEE
DRAWN	S.KUMAR
CHECKED AND VERIFIED	D.CHATTERJEE
APPROVED	SIG A.K.BAIRAGI
	DATE:– 15.02.2022

NORTH - EAST GAS GRID PIPELINE PROJECT

NATURAL GAS COMPRESSOR STATION
P & I DIAGRAM (TYPICAL FOR EACH COMPRESSOR)

SCALE : N.T.S

DRG. NO. MEC/05/28/23UU/NGCS/TD/017

REV 00

CONCURRED BY

DRG. NO. MEC/05/28/23UU/NGCS/TD/018

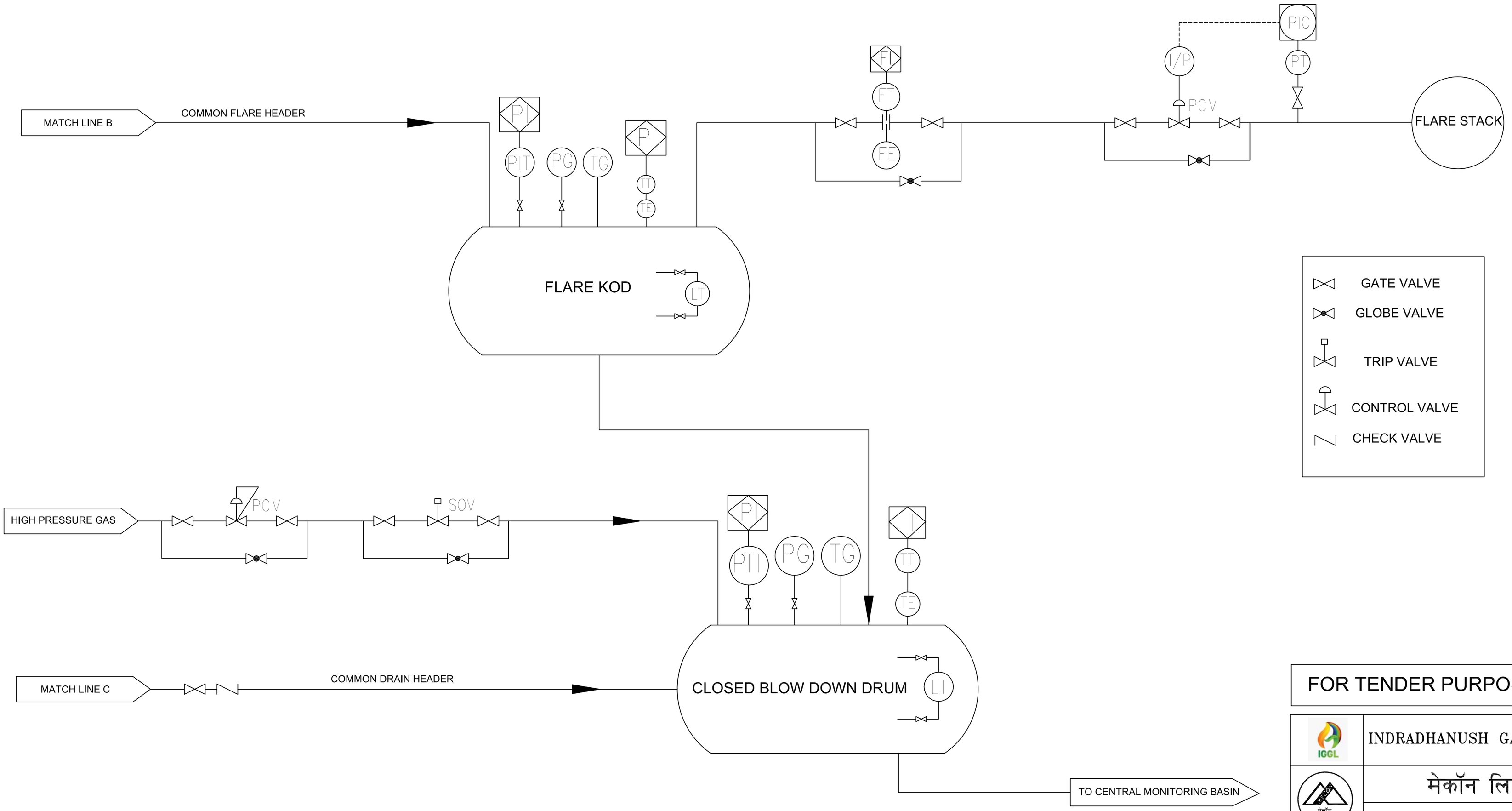

FOR TENDER PURPOSE ONLY

INDRADHANUSH GAS GRID LTD.

मेकॉन लिमिटेड

MECON LIMITED

1. P&ID IS INDICATIVE WITH BARE MINIMUM PIPE, VALVES, FITTINGS AND INSTRUMENTS.
2. TENDERER SHALL PREPARE DETAILED P&ID.
3. OPERATION, CONTROL & MONITORING OF ENTIRE PLANT AND EQUIPMENT SHALL BE CARRIED OUT FROM CENTRAL PLC/ DCS.

REV. NO.	DATE	DESCRIPTION	BY	VERIFIED
△	11.06.2021	PLOT AREA OPTIMIZATION	CSR	ASHUTOSH

REVISION

REFERENCES | DOC NO./DRG. NO.

CONCURRED BY

© Copyright MECON LIMITED - All rights reserved.
THIS DRAWING IS THE PROPERTY OF MECON AND ISSUED FOR THE SPECIFIC PROJECT MENTIONED THEREIN. THIS IS NOT TO BE COPIED OR USED FOR OTHER PROJECTS UNLESS EXPRESSLY PERMITTED BY MECON.

SECTION	PP & EE
LOCATION	RANCHI
DESIGNED	S.BANERJEE
DRAWN	S.KUMAR
CHECKED AND VERIFIED	D.CHATTERJEE
APPROVED	SIG A.K.BAIRAGI
	DATE:- 15.02.2022

NORTH - EAST GAS GRID PIPELINE PROJECT

NATURAL GAS COMPRESSOR STATION
P & I DIAGRAM (TYPICAL FOR EACH COMPRESSOR)

SCALE : N.T.S | REV 00

DRG. NO. MEC/05/28/23UU/NGCS/TD/018

DRG. NO. MEC/05/28/23UU/NGCS/TD/019

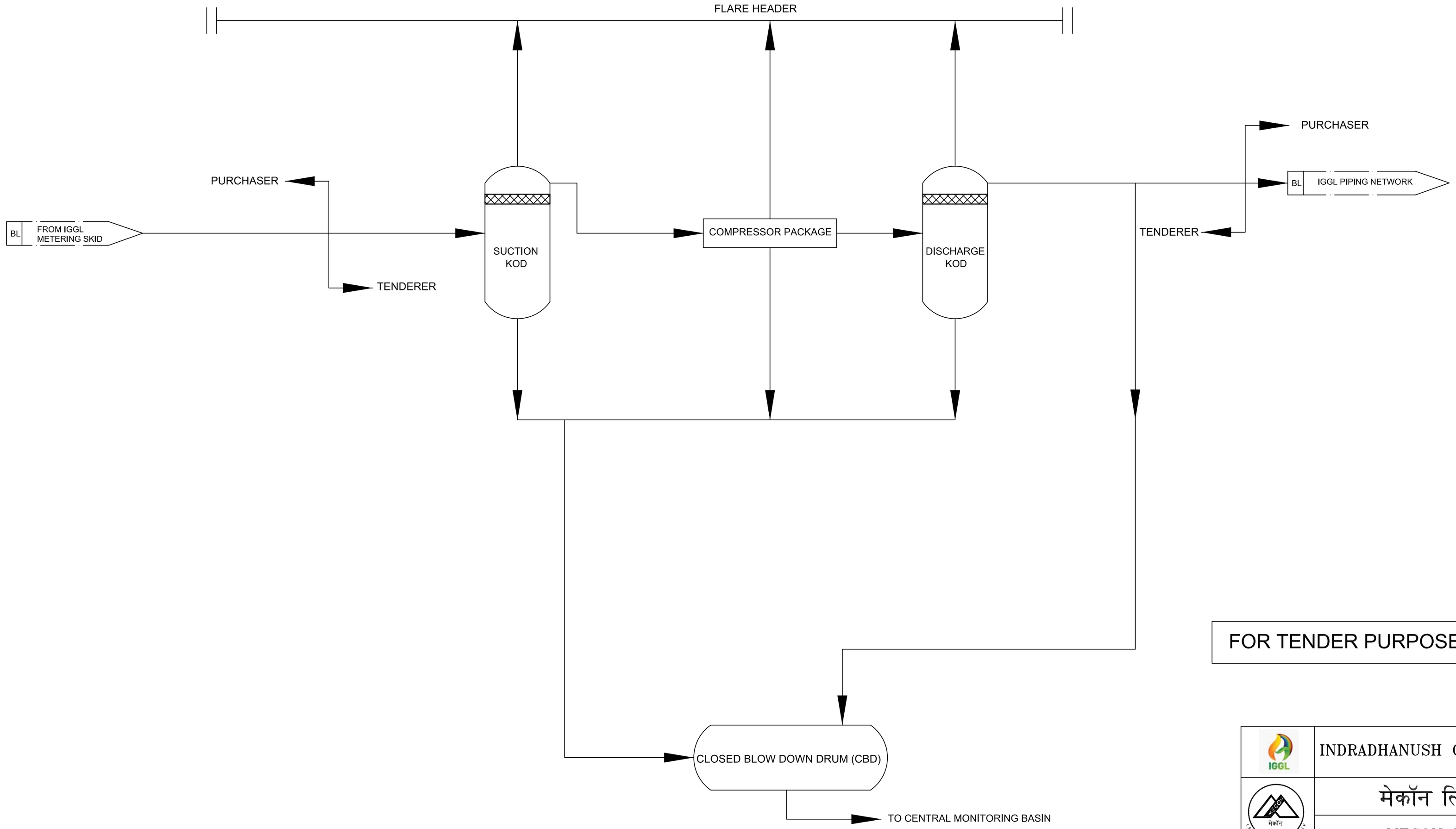

FOR TENDER PURPOSE ONLY

△															
△															
△															
△															
△															
△															
REV. / SEC.	CONCURRED BY														
						△	11.08.2021	PLOT AREA OPTIMIZATION	CSR	ASHUTOSH					
						REV. NO.	DATE	DESCRIPTION	BY	VERIFIED					
								REVISION							

REFERENCES | DOC. NO./DRG. NO.

© Copyright MECON LIMITED – All rights reserved.
THIS DRAWING IS THE PROPERTY OF MECON AND ISSUED FOR THE SPECIFIC PROJECT MENTIONED THEREIN. THIS IS NOT TO BE COPIED OR USED FOR OTHER PROJECTS UNLESS EXPRESSLY PERMITTED BY MECON.

INDRADHANUSH GAS GRID LTD.

मेकॉन लिमिटेड

MECON LIMITED

SECTION	PP & EE
LOCATION	RANCHI
DESIGNED	S.BANERJEE
DRAWN	S. KUMAR
CHECKED AND VERIFIED	D.CHATTERJEE
APPROVED	SIG A.K.BAIRAGI
	DATE:– 15.02.2022

NORTH - EAST GAS GRID PIPELINE PROJECT

NATURAL GAS COMPRESSOR STATION
PROCESS FLOW DIAGRAM
(TYPICAL FOR EACH COMPRESSOR)

SCALE : N.T.S

REV 0

DRG. NO. MEC/05/28/23UU/NGCS/TD/019

DRG.NO.MEC/05/28/23UU/NGCS/TD/020

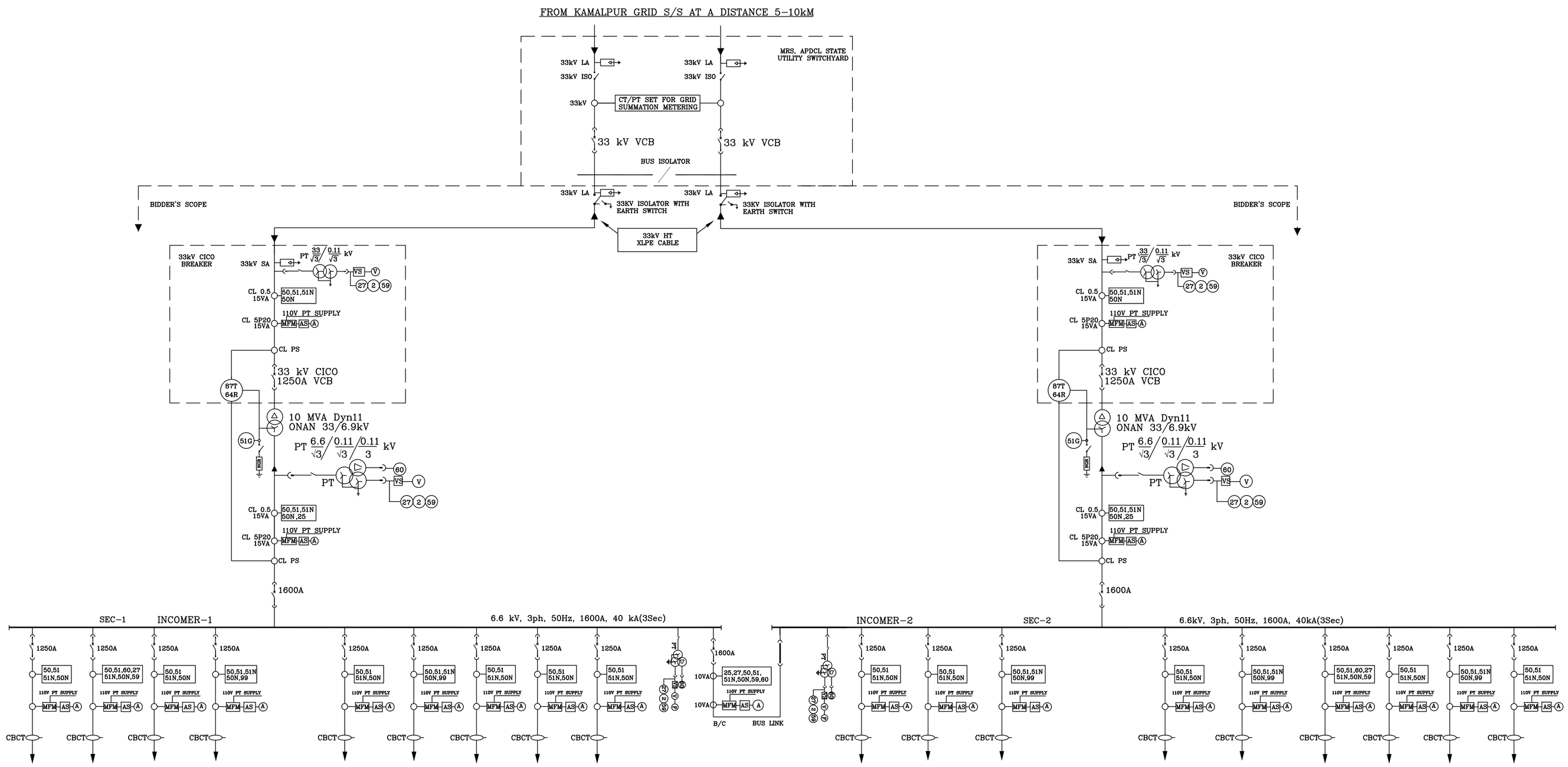

LEGEND

- LIGHTNING ARRESTOR
- ISOLATOR
- CIRCUIT BREAKER (DRAWOUT TYPE)
- MCCB
- ACB
- POWER TRANSFORMER
- POTENTIAL TRANSFORMER
- NEUTRAL GROUNDING RESISTANCE
- (50) INST. O/C RELAY
- (51) IDMT. O/C RELAY
- (50N) INST. E/F RELAY
- (51N) IDMT. E/F RELAY
- (95T) TRIP CKT SUPERVISION RELAY
- (51G) STAND BY EARTH FAULT RELAY
- (25) CHECK SYNCH RELAY
- (27) U/V RELAY
- (2) TIMER
- (97) FUSE FAILURE RELAY
- (59) O/V RELAY
- (87T) TRAFO. DIFF. PROT. RELAY
- (60) PHASE DISPLACEMENT RELAY
- (99) MOTOR PROTECTION RELAY
- (64R) RESTRICTED EARTH FAULT RELAY

FEEDER DESCRIPTION	DISTBN TRAFO FEEDER-1	CAPACITOR FEEDER	HT COMPRESSOR - 1(W) THROUGH VFD	HT COMPRESSOR - 1(W) DOL BYPASS	INCOMER-1	HT COMPRESSOR - 2(W) THROUGH VFD	HT COMPRESSOR - 2(W) DOL BYPASS	DISTBN TRAFO FEEDER-2	SPARE HT COMPRESSOR FDR(THGH VFD)	SPARE DISTBN TRAFO FEEDER	BUS PT-1	BUS COUPLER & BUS LINK	BUS PT-2	DISTBN TRAFO FEEDER-3	HT COMPRESSOR - 3(W) THROUGH VFD	HT COMPRESSOR - 3(W) DOL BYPASS	INCOMER-2	HT COMPRESSOR - 4(S) THROUGH VFD	HT COMPRESSOR - 4(S) DOL BYPASS	CAPACITOR FEEDER	DISTBN TRAFO FEEDER-4	SPARE HT COMPRESSOR FDR(DOL BYPASS)	SPARE DISTBN TRAFO FEEDER
CABLE SIZE IN 6.6kV (UE)	1R(3Cx240 SQM)	1R(3Cx240 SQM)	1R(3Cx240 SQM)	1R(3Cx240 SQM)	5R(3Cx240 SQM)	1R(3Cx240 SQM)	1R(3Cx240 SQM)	1R(3Cx240 SQM)	1R(3Cx240 SQM)	1R(3Cx240 SQM)	--	--	--	1R(3Cx240 SQM)	1R(3Cx240 SQM)	1R(3Cx240 SQM)	5R(3Cx240 SQM)	1R(3Cx240 SQM)	1R(3Cx240 SQM)	1R(3Cx240 SQM)	1R(3Cx240 SQM)	1R(3Cx240 SQM)	1R(3Cx240 SQM)
CT RATIO	100/1/1A	200/1/1A	200/1/1A	200/1/1A	1200/1/1/1A	200/1/1A	200/1/1A	100/1/1A	200/1/1A	100/1/1A	--	1200/1/1A	--	100/1/1A	200/1/1A	200/1/1A	1200/1/1/1A	200/1/1A	200/1/1A	200/1/1A	100/1/1A	200/1/1A	100/1/1A

NOTES:-

1) 33kV SPARE BREAKER CARRIAGE (1NOS) SHALL BE PROVIDED FOR EMERGENCY PURPOSE (FOR CICO BKR.)
2) CBCT, CT RATIO, CABLE SIZE ETC ARE INDICATIVE AND AS MENTIONED SHALL BE FINALISED DURING DETAILED ENGINEERING / DRG. APPROVAL
3) DRAWING SHALL BE READ IN CONJUNCTION WITH RELEVANT CLAUSE OF TS.
4) SEPARATE LINE PT & BUS PT PANEL SHALL BE PROVIDED.
5) SEPARATE BUS LINK PANEL SHALL BE PROVIDED IN BUS COUPLER PANEL.
6) SWITCHBOARDS SHALL BE DESIGN SUITABILITY TO EXTEND IN BOTH ENDS FOR FUTURE USE.
7) ALL INDICATION LAMPS, SELECTOR SWITCHES, HOOTERS ANNUNCIATION FACIA ETC. AS PER REQUIREMENT SHALL BE PROVIDED.
8) COMPRESSOR MOTOR RATING SHALL BE AS PER PROCESS REQUIREMENT
9) FOR COMPRESSOR MOTOR STARTING AND RUNNING ARRANGEMENT REFER SEPARATE DRAWING.

REV. NO.	DATE	ZONE	DESCRIPTION	BY	VERIFIED
1	16.06.22		DOL BYPASS FEEDER ADDED		

REVISIONS

REFERENCES DRG. NO.

THIS DRAWING IS THE PROPERTY OF MECON AND IS ISSUED FOR THE SPECIFIC PROJECT MENTIONED THEREIN. THIS IS NOT TO BE COPIED OR USED FOR OTHER PROJECTS UNLESS EXPRESSLY PERMITTED BY MECON.

CONCURRED BY SEC.

FOR TENDER PURPOSE ONLY

INDRADHANUSH GAS GRID LTD

मेकॉन लिमिटेड

MECON LIMITED

SECTION	ELECTRICAL-E1
LOCATION	RANCHI
DESIGNED	P.P.SAHA
DRAWN	P K SRIVASTAVA
CHECKED AND VERIFIED	PPS/HKM
APPROVED	A. PANDEY
DATE:	FEB. 2022

NORTH - EAST GAS GRID PIPELINE PROJECT

33kV & 6.6kV BASIC POWER DISTRIBUTION SINGLE LINE DIAGRAM

SCALE - NTS | SHEET 1 OF 1 | REV. 0

MEC/05/28/23UU/NGCS/TD/020

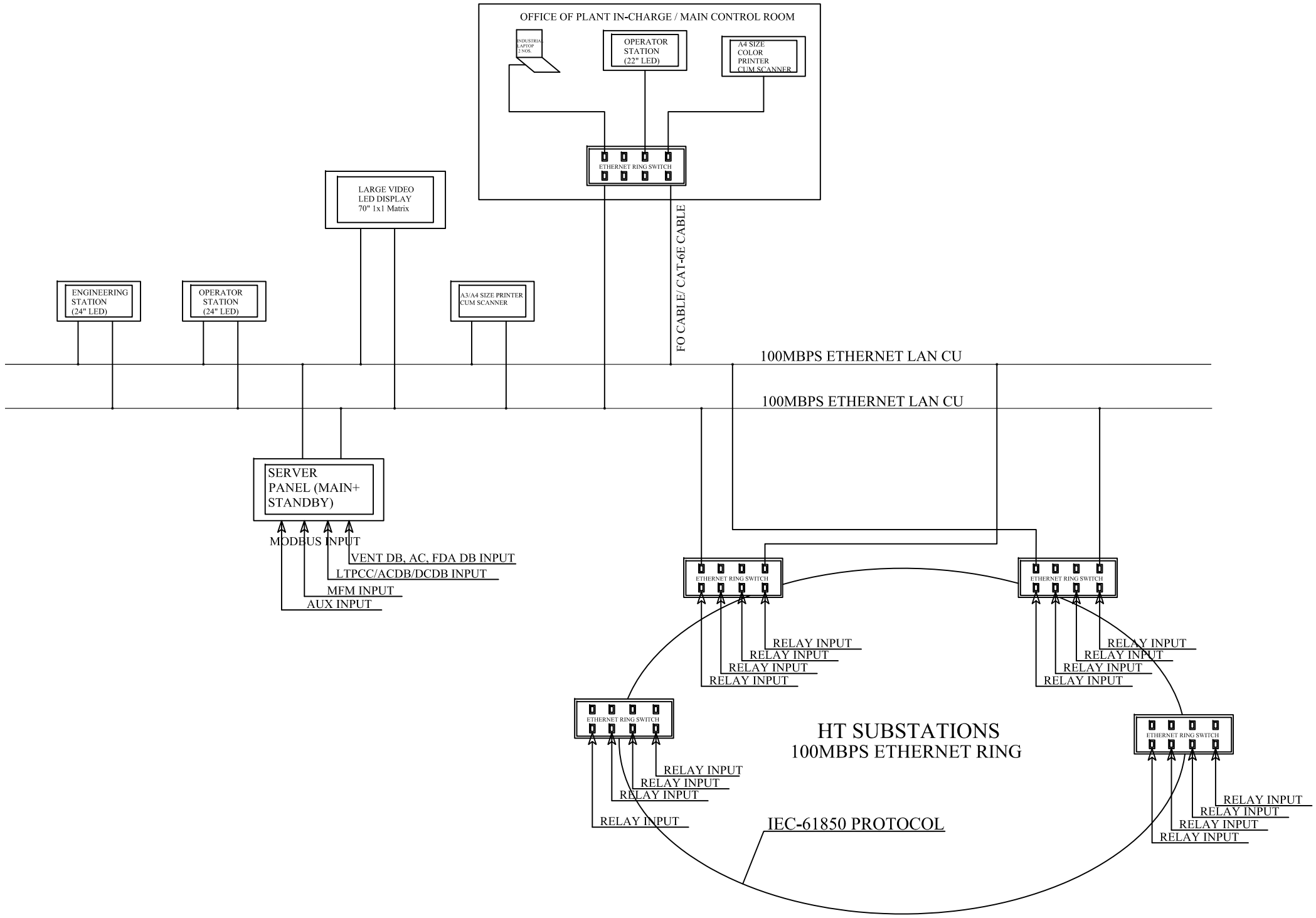

FOR TENDER PURPOSE ONLY

INDRADHANUSH GAS GRID LTD

मैकॉन लिमिटेड

MECON LIMITED

NOTES:–

1. DETAIL OF EACH EQUIPMENT SHALL BE DECIDED DURING DETAILED ENGINEERING.
2. ALL ENGINEERING STATION, OPERATING STATION, SERVER AND PRINTER ARE CONNECTED ON ETHERNET BUS THROUGH IEC–61850 PROTOCOL.
3. ALL MFM/AUXIALARY SIGNAL SHALL BE CONNECTED DIRECTLY TO MAIN+STANDBY SERVER.
4. DETAIL ALL I/O SIGNAL OF ALL EQUIPMENT LIKE (RELAYS, BCUs, MFMs AND OTHER AUX SIGNAL) SHALL BE FINALIZED DURING DETAILED ENGINEERING STAGE.
5. SUBSTATION AUTOMATION SYSTEM SHALL BE HOT REDUNDANT TYPE.

REV. NO.	DATE	ZONE	DESCRIPTION	BY	VERIFIED

REVISIONS

REFERENCES DRG. NO.

THIS DRAWING IS THE PROPERTY OF MECON AND IS ISSUED FOR THE SPECIFIC PROJECT MENTIONED THEREIN. THIS IS NOT TO BE COPIED OR USED FOR OTHER PROJECTS UNLESS EXPRESSLY PERMITTED BY MECON.

SECTION	ELECTRICAL–E1	NORTH – EAST GAS GRID PIPELINE PROJECT
LOCATION	RANCHI	TYPICAL SUBSTATION AUTOMATION SYSTEM ARCHITECTURE
DESIGNED	I.A	
DRAWN	P K SRIVASTAVA	
CHECKED AND VERIFIED	P.P.SAHA	
APPROVED	A. PANDEY	SCALE – NTS
DATE:	FEB. 2022	MEC/05/28/23UU/NGCS/TD/021

SHEET 1 OF1 REV. 0

CONCURRED BY SEC.

MEC/05/28/23UU/NGCS/TD/021

MEC/05/28/23UU/NGCS/TD/022

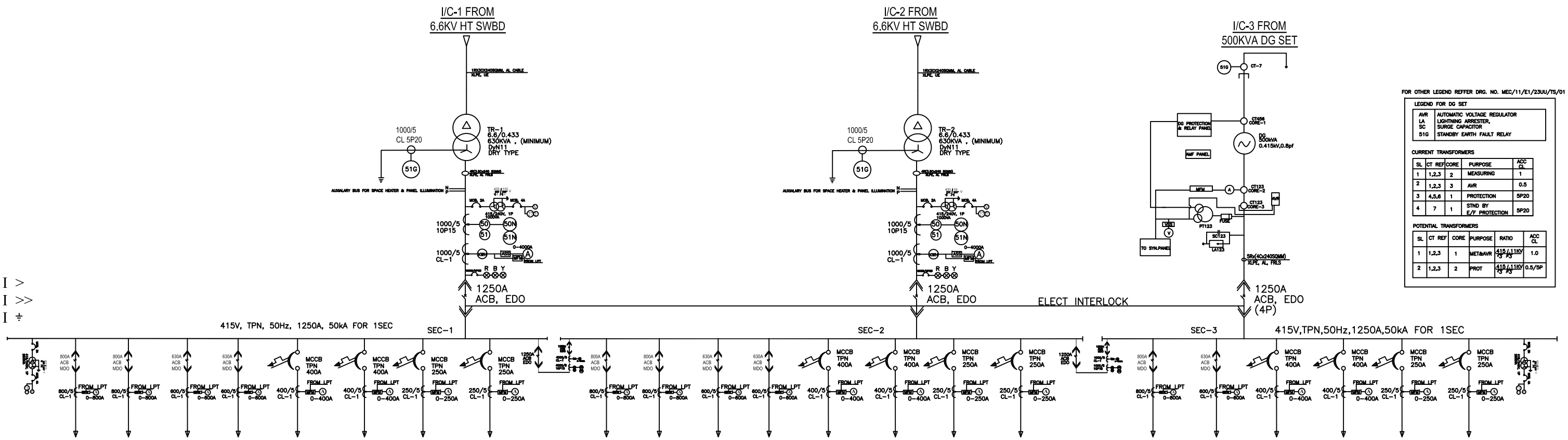

FOR OTHER LEGEND REFFER DRG. NO. MEC/11/E1/23UU/TS/01

LEGEND FOR DG SET

AVR	AUTOMATIC VOLTAGE REGULATOR
LA	LIGHTNING ARRESTER,
SC	SURGE CAPACITOR
51G	STANDBY EARTH FAULT RELAY

CURRENT TRANSFORMERS

SL	CT REF	CORE	PURPOSE	ACC CL
1	1,2,3	2	MEASURING	1
2	1,2,3	3	AVR	0.5
3	4,5,6	1	PROTECTION	5P20
4	7	1	STND BY E/F PROTECTION	5P20

POTENTIAL TRANSFORMERS

SL	CT REF	CORE	PURPOSE	RATIO	ACC CL
1	1,2,3	1	MET&AVR	415/√3/110V/√3	1.0
2	1,2,3	2	PROT	415/√3/110V/√3	0.5/5P

FOR TENDER PURPOSE ONLY

INDRADHANUSH GAS GRID LTD

मेकॉन लिमिटेड

MECON LIMITED

NOTES:-

1) LTPCC OUTGOING FEEDERS RATING AND NUMBERS ARE INDICATIVEAND SHALL BE FINALISED DURING ENGINEERING STAGE.
2) BREAKER RATING, CT RATIO, CABLE SIZE ETC ARE INDICATIVE AND AS MENTIONED SHALL BE FINALISED DURING DETAILED ENGINEERING / DRG. APPROVAL
3) DRAWING SHALL BE READ IN CONJUNCTION WITH RELEVANT CLAUSE OF TS.
4) SEPARATE BUS LINK PANEL SHALL BE PROVIDED IN BUS COUPLER PANEL.
5) SWITCHBOARDS SHALL BE DESIGN SUITABILITY TO EXTEND IN BOTH ENDS FOR FUTURE USE.
6) ALL PROTECTION SYSTEM INDICATION LAMPS, SELECTOR SWITCHES, HOOTERS ANNUNCIATION FACIA ETC. AS PER REQUIREMENT SHALL BE PROVIDED.
7) LPTCC-1 & LTPCC-2 LOAD CONSIDERATION SHALL BE AS PER TS.
8) CHECK SYNCHRO RELAY AND OTHER AUXILLARY RELAY SHALL BE PROVIDED AS PER DETAIL ENGINEERING AND TENDER REUIREMENT.

REV.	DATE	ZONE	DESCRIPTION	BY	VERIFIED

REVISIONS

REFERENCES DRG. NO.

THIS DRAWING IS THE PROPERTY OF MECON AND IS ISSUED FOR THE SPECIFIC PROJECT MENTIONED THEREIN. THIS IS NOT TO BE COPIED OR USED FOR OTHER PROJECTS UNLESS EXPRESSLY PERMITTED BY MECON.

SECTION	ELECTRICAL-E1	NORTH – EAST GAS GRID PIPELINE PROJECT
LOCATION	RANCHI	TYPICAL LTPCCs (LTPCC-1 & 2) SINGLE LINE DIAGRAM
DESIGNED	P.P.S	
DRAWN	P K SRIVASTAVA	
CHECKED AND VERIFIED	P.P.SAHA	
APPROVED	A. PANDEY	SCALE – NTS
DATE:	FEB. 2022	MEC/05/28/23UU/NGCS/TD/022

SHEET 1 OF 1 REV. 0

CONCURRED BY SEC.

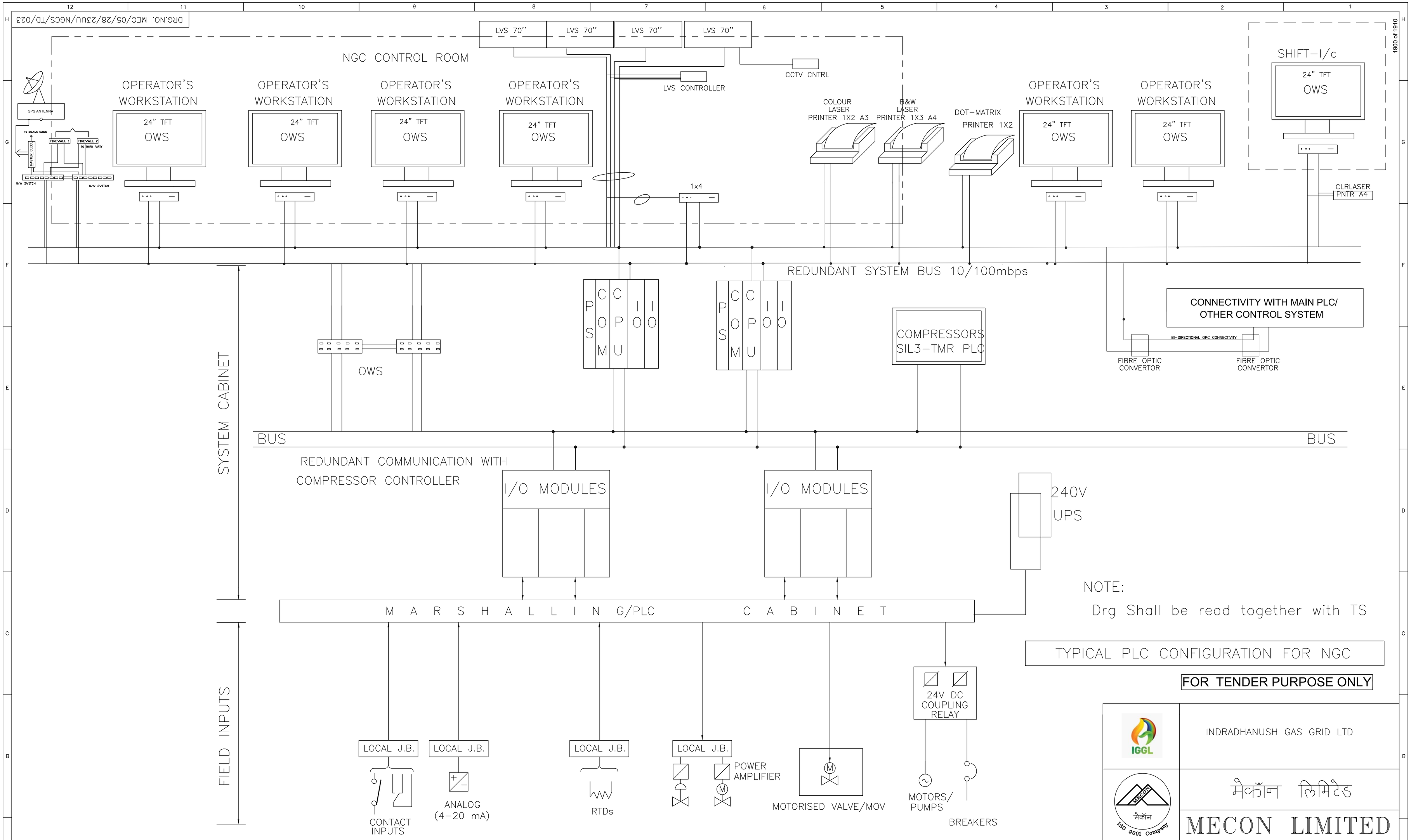

NOTE:

Drg Shall be read together with TS

TYPICAL PLC CONFIGURATION FOR NGC

FOR TENDER PURPOSE ONLY

INDRADHANUSH GAS GRID LTD

मेकॉन लिमिटेड

MECON LIMITED

REV NO	DATE	ZONE	DESCRIPTION	BY	VERIFIED	
01	31-01-2024					
DATE : 12.02.2022			REVISIONS			

NOTES:

CONCURRED BY

REFERENCES | DRG. NO.

THIS DRAWING IS THE PROPERTY OF MECON AND IS ISSUED FOR THE SPECIFIC PROJECT MENTIONED THEREIN. THIS IS NOT TO BE COPIED OR USED FOR OTHER PROJECTS UNLESS EXPRESSLY PERMITTED BY MECON.

SECTION	E&I(PP)	NORTH – EAST GAS GRID PIPELINE PROJECT
LOCATION	RANCHI	
DESIGNED	D.K.MISHRA	PLC CONFIGURATION DIAGRAM
DRAWN	D.K.MISHRA	
CHECKED AND VERIFIED	A.K.MAITI	
APPROVED	SIG.	SCALE – NTS
	DRG.NO. MEC/05/28/23UU/NGCS/TD/023	SHEET 1 OF 1 / REV 00

MINIMUM REMOTE ALARMS/STATUS/ANNUNCIATION REQUIRED AT CONTROL ROOM FOR FIRE WATER SYSTEM.

1.	DIESEL DRIVEN PUMPS
1.1	Input to PLC
a	Engine Running Status.
b	Engine Failed to Start.
c	Diesel Pump in Auto Mode
d	Diesel Pump in Maual Mode
e	Low Lube Oil Pressure
f	High Water Temperature
g	Low Diesel Fuel Level.
h	Low Battery Voltage
i	Over Speed Trip
1.2	Output From PLC
a)	Pump Start
2	MOTOR DRIVEN PUMPS
2.1	Input to PLC
a)	Pump On Status
b)	Pump Off Status
c)	Pump Trip.
d)	High Motor Temperature
e)	Pump in Auto Mode
f)	Pump in Manual Mode
2.2	Output From PLC
a)	Pump Start
b)	Pump Stop
3.	OTHERS
	PRESSURE TRANSMITTERS
a)	Continous Indication of pressure in Hydrant Line with Low pressure alarms
	LEVEL TRANSMITTERS ON FIRE WATER TANKS
a)	Continous Indication of Level with Low Level Alarms.

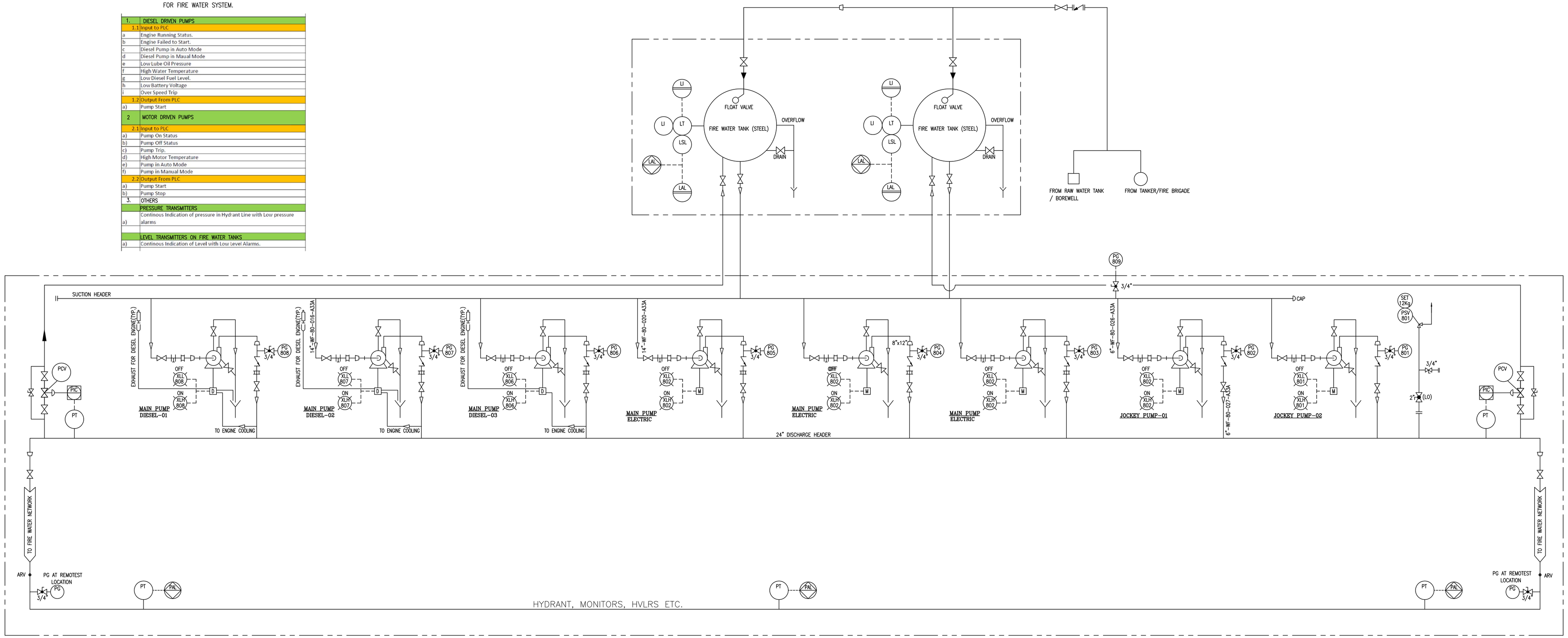

NOTES:

1. ALL REDUCERS ARE ECCENTRIC TYPE WITH FLAT TOP AND PUMP CASING TOP SHALL BE BELOW MIN. WATER LEVEL.
2. ALL PUMPS SHALL HAVE MANUAL STARTING IN ADDITION TO AUTO START.
3. DIESEL DAY TANK SHALL BE SUPPLIED WITH DIESEL ENGINE.
4. THE DESIGN FIRE WATER FLOW SHALL BE AS PER OISD GUIDLINES
5. THE NETWORK SHALL BE CONTINUOUSLY KEPT PRESSURISED AT 8.5 Kg./Sq.Cm. WITH THE HELP OF JOCKEY PUMP.
6. THE PUMP OPERATION SHALL BE AS FOLLOWS :-

(a) THE JOCKEY PUMP SHALL KEPT THE NET WORK PRESSURISED AT 8.5 Kg./Sq.Cm. IN CASE THE NETWORK PRESSURE DROPS BELOW 7.5 Kg./Sq.Cm. IT SHALL START AUTOMATICALLY TILL THE PRESSURE BUILD UPTO 8.5 Kg./Sq.Cm. AT 8.5 Kg./Sq.Cm. IT SHALL AUTOMATICALLY STOP.

(b) IN CASE PRESSURE CONTINUES TO FALL BELOW 7.5 Kg./Sq.Cm. THERE SHALL BE AN ALARM IN PUMP STATION AND CONTROL ROOM AT PRESSURE 7.0 Kg./Sq.Cm. THE MAIN PUMPS SHALL START SEQUENTIALLY

7. ALL MAIN PUMP SHALL BE STOPPED MANUALLY AFTER GETTING PROPER DIRECTION/SIGNAL FROM FIRE MARSHAL.
8. TOTAL NO. OF MAIN PUMP AND STANBY PUMPS SHALL BE DECIDED DURING DE.
9. ALL THE VALVE SHALL BE LOCK-OPEN POSITION EXCEPT DRAIN VALVE.
10. DIESEL DAY TANK SHALL BE SUPPLIED ALONG WITH BREATHING VALVE, FLAME ARRESTOR, VENT, DRAIN VALVE, INLET/OUTLET, LEVEL GAUGE, LEVEL (LOW) ALARM SWITCH AND ALL CONNECTED PIPES AND FITTINGS.
11. THE DIESEL DAY TANKS (ONE NO. FOR EACH DIESEL PUMP) ALONG WITH FUEL PIPING, ACCESSORIES, INSTRUMENTS, SHED FOR FUEL TANKS, ETC SHALL BE IN THE SCOPE OF BIDDER.
12. IN CASE OF FAILURE OF ONE JOCKEY PUMP, OTHER SHALL START AUTOMATICALLY IN 30 SECONDS.
13. THE JOCKEY PUMP SHALL RUN ON EMERGENCY POWER SUPPLY IN CASE OF MAIN POWER FAILURE.
14. IN CASE OF FAILURE OF ANY MAIN PUMP, STAND-BY PUMP SHALL START AUTOMATICALLY IN 30 SECONDS.
15. INDEPENDENT BATTERIES WITH TRICKEL CHARGER FOR STARTING OF DIESEL ENGINES SHALL BE SUPPLIED.
16. EACH DIESEL OIL TANK SHALL HAVE CAPACITY OF 8 Hrs CONTINOUS RUNNING OF THE ENGINE.
17. THE DAY TANKS INCLUDING ACCESSORIES AND CONNECTIONS TO ENGINE ETC. SHALL BE SUPPLIED AS PART OF DIESEL ENGINE SET.
18. ALL DIESEL TANKS SHALL BE PLACED OUTSIDE THE FIRE WATER PUMP HOUSE.
19. PUMP RUNNING INDICATION IN AUDIO AND VISIUAL FORM SHALL BE REPEATED IN CONTROL ROOM.
20. JOKEY PUMP SHALL STOP AUTOMATICALLY ONCE THE MAIN PUMP STARTS.
21. EXHAUST FOR DIESEL ENGINES TO BE LOCATED ABOVE ROOF LEVEL OF PUMP PUMP HOUSE ROOF AND SHALL BE MIN. 3.0M ABOVE NEAREST HIGH POINT
22. ALL PRESSURE TRANSMITTERS SHALL BE CONNECTED TO PLC
23. GATE VALVES SHALL BE USED FOR ISOLATION IN FIRE WATER PUMP HOUSE PIPING.
24. THE QUANTITY OF PUMPS (DIESEL /ELECTRIC) IN THIS DRAWING IS TENTATIVE AND SAME SHALL BE DECIDED DURING DETAIL ENGINEERING.

FOR TENDER PURPOSE ONLY

LEGEND:-

	GATE VALVE	WF	FIRE WATER	D	DIESEL ENGINE
	CHECK VALVE		T/Y-STRAINER	PAL	PRESSURE ALARM (LOW)
	REDUCER/ENLARGER	PG	PRESSURE GAUGE	PSH	PRESSURE SWITCH (HIGH)
	EXPENTION BELLOW	LG	LEVEL GAUGE	PSL	PRESSURE SWITCH (LOW)
	DRAIN	LI	LEVEL INDICATOR	LSL	LEVEL SWITCH (LOW)
		XL	RUNNING INDICATION	LAL	LEVEL ALARM (LOW)
		P	PUMP	PB	PUSH BUTTON
		M	ELECTRIC MOTOR		

PLC

LOCAL INST

PIPE LINE CONTROL ROOM PANEL INST

LOCAL PANEL INST (LOCAL IN FIRE WATER PUMP HOUSE)

28"-WF-80-010-A33A
- MATERIAL SPEC.
- LINE NO.
- UNIT NO.
- LINE LEGEND
- LINE SIZE

IGGL

INDRADHANUSH GAS GRID LTD.

मेकॉन लिमिटेड

MECON LIMITED

REV	DATE	ZONE	DESCRIPTION	BY	VERIFIED
			REVISION		

REV / SEC — CONCURRED BY

REFERENCES	DRG.NO.

© Copyright MECON – All right reserved.
THIS DRAWING IS THE PROPERTY OF MECON AND ISSUED FOR THE SPECIFIC PROJECT MENTIONED THEREIN. THIS IS NOT TO BE COPIED OR USED FOR OTHER PROJECTS UNLESS EXPRESSLY PERMITTED BY MECON.

SECTION	OIL & GAS
LOCATION	NEW DELHI
DESIGNED	C.S.R
DRAWN	SUNIL KUMAR
CHECKED AND VERIFIED	S.WAHID
APPROVED	SIG (Dr.R.K.DUTTA)
	DATE 30.5.22

NORTH - EAST GAS GRID PIPELINE PROJECT

PIPING & INSTRUMENTATION DIAGRAM FOR FIRE WATER SYSTEM AT GUWAHATI

SCALE : N:T:S | SHEET 1 OF 1 | REV

DRG. NO. MEC/05/28/23UU/NGCS/TD/024 | 0

DRG.NO : MEC/05/28/23UU/NGCS/TD/025

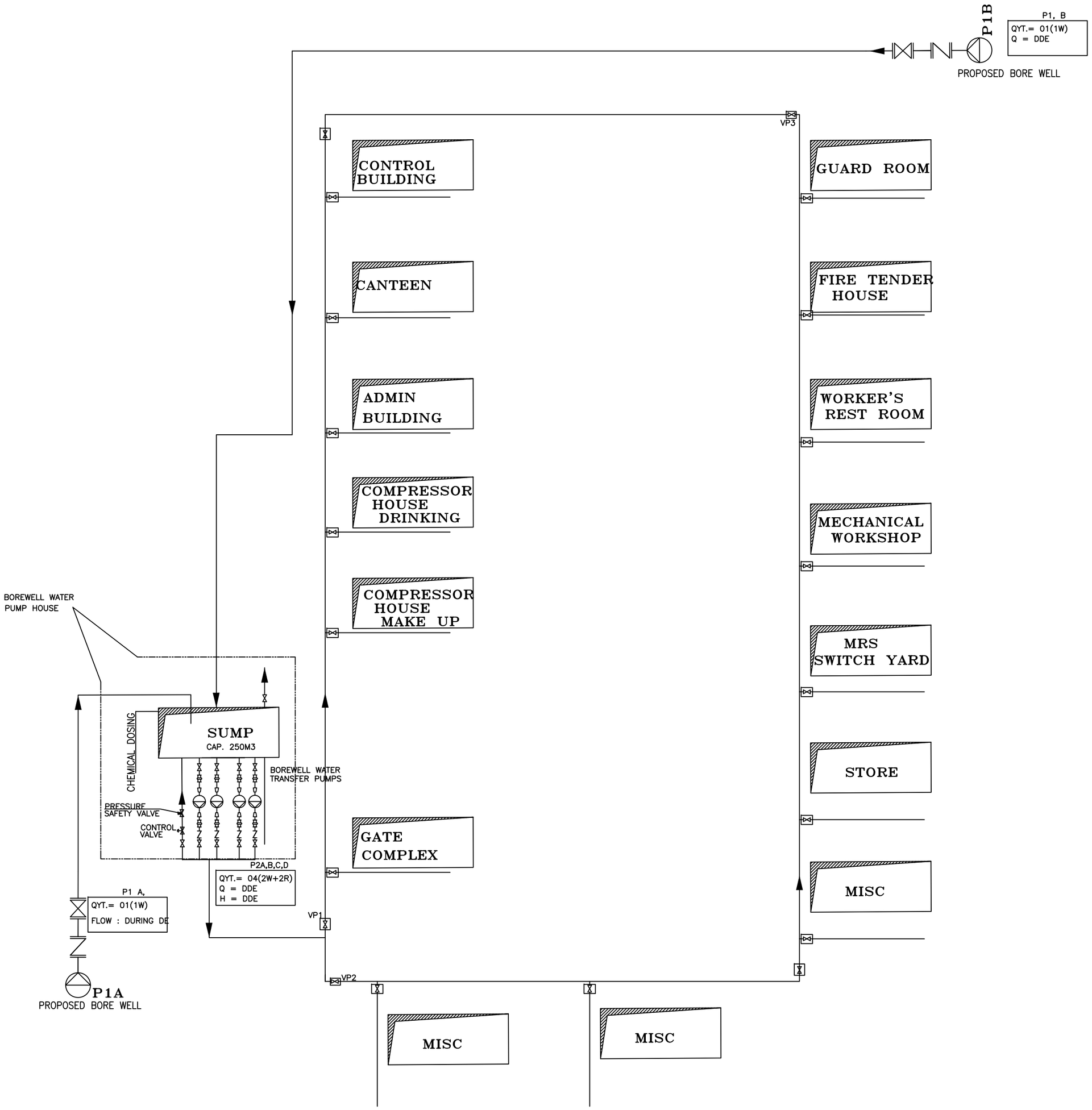

LEGEND:–

RUBBER JOINT VALVE	–	
NON RETURN VALVE	–	
GATE VALVE	–	
DW	–	DRINKING WATER
BALL VALVE	–	
PUMP	–	
VALVE PIT & VALVE	–	

FOR TENDER PURPOSE ONLY

NOTE:–

1. VALVE PIT SHALL BE PROVIDED ON UNDERGROUND LINE.
2. BIDDER SHALL SUPPLY & INSTALL PVC TANK (CAPACITY –1500 LITERS) AT EACH UNIT, WITH FLOAT VALVE, OVERFLOW & DRAIN CONNECTION.
3. DEDICATED PVC TANK (CAPACITY –2000 LITERS) TO MEET PROCESS WATER NEEDS ALONG WITH OVERFLOW & DRAIN CONNECTION SHALL BE SUPPLIED & INSTALLED BY THE BIDDER
4. FOR SUMP DEDICATED DRAIN & OVERFLOW CONNECTION ALONGWITH VALVE TO BE PROVIDED BY THE BIDDER

REV.	DESCRIPTION	BY	VERIFIED	DATE	DESCRIPTION	BY	VERIFIED
03							
02							
01							

REVISIONS

CONCURRED BY

REFERENCES

THIS DRAWING IS THE PROPERTY OF MECON AND IS ISSUED FOR THE SPECIFIC PROJECT MENTIONED THEREIN. THIS IS NOT TO BE COPIED OR USED FOR OTHER PROJECTS UNLESS EXPRESSLY PERMITTED BY MECON.

INDRADHANUSH GAS GRID LTD.

मेकॉन लिमिटेड

MECON LIMITED

NORTH – EAST GAS GRID PIPELINE PROJECT

DRINKING WATER FACILITY

SECTION	FS & PD
LOCATION	RANCHI
DESIGNED	SK
DRAWN	SK
CHKD. & VERIFIED	SSB
APPROVED	KG

SCALE:– NTS

MEC/05/28/23UU/NGCS/TD/025 REV 01

SIZE– A 2

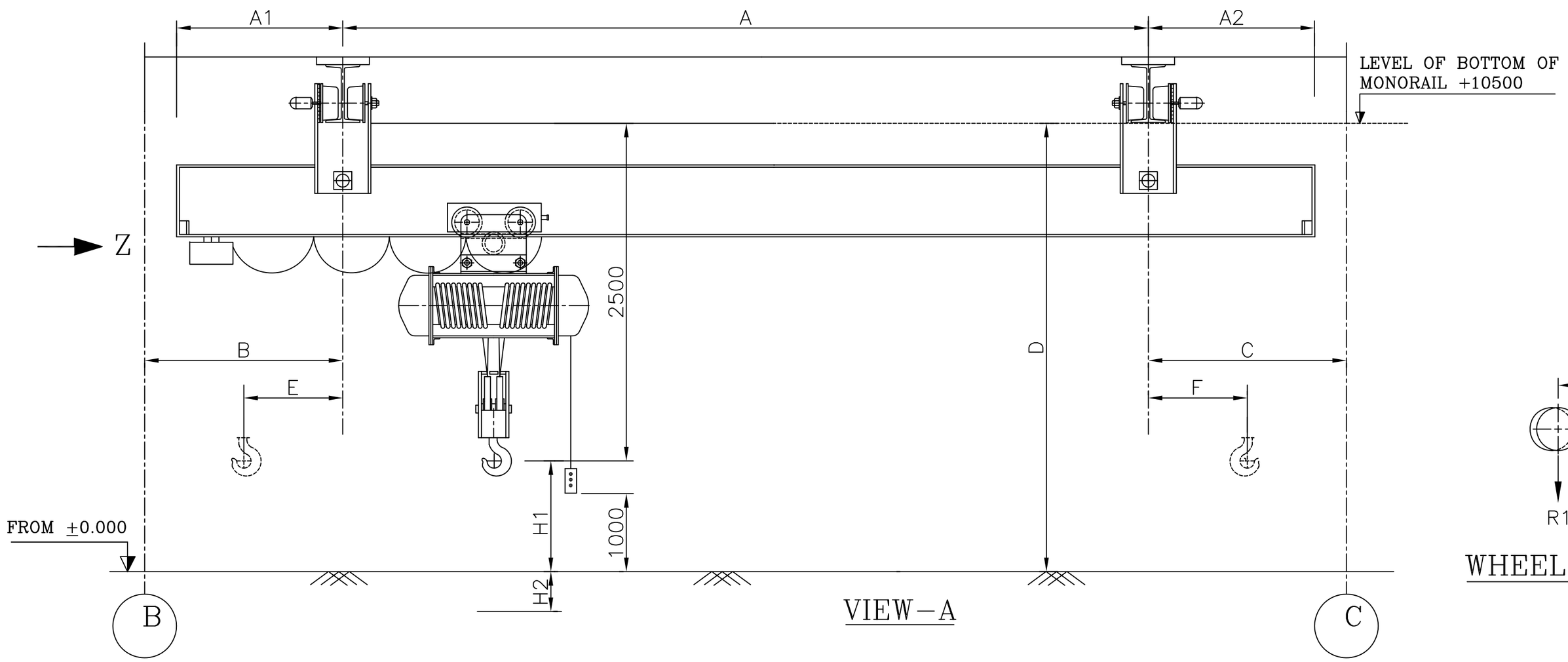

VIEW–A

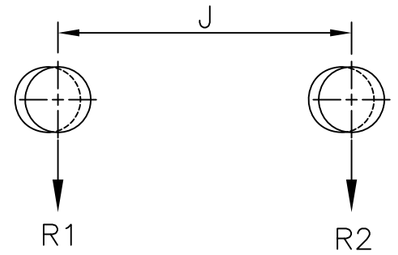

WHEEL LOAD DIAGRAM

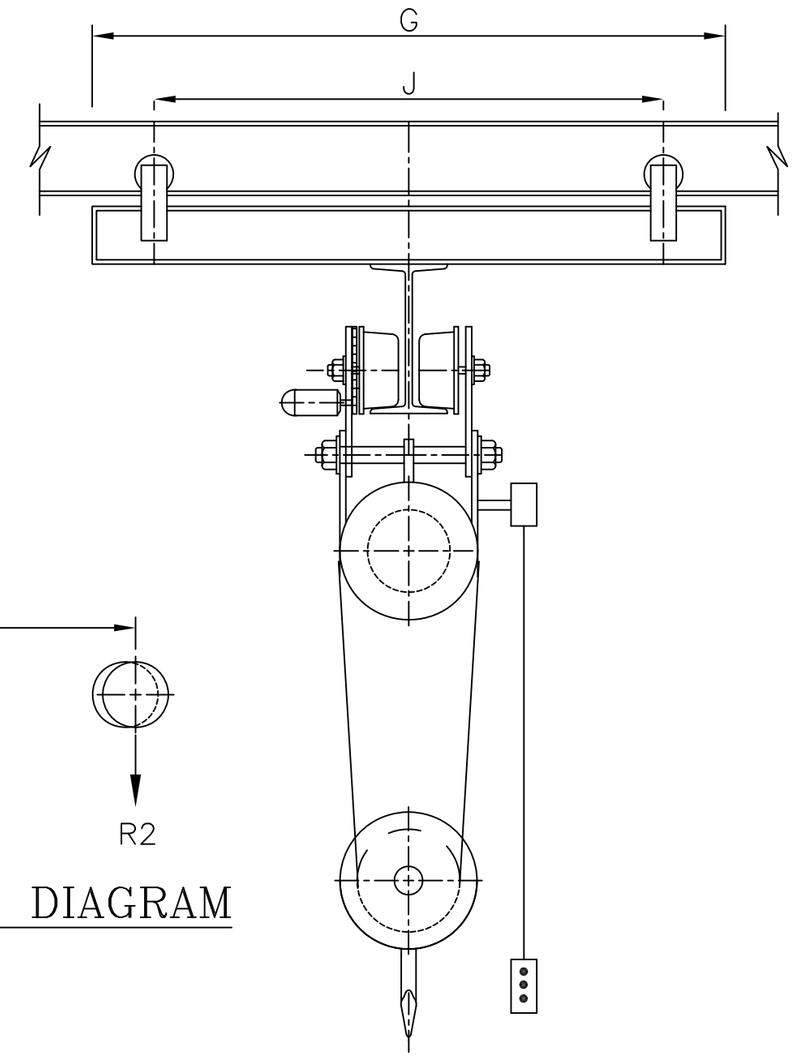

VIEW–Z

TECHNICAL CHARACTERISTIC

SL. NO.	CAP. (t)	HEIGHT OF LIFT (m)	QTY.	DUTY CLASS	SPEED (m/min.) HOIST NORMAL	SPEED (m/min.) HOIST CREEP	SPEED (m/min.) TRAVEL CT	SPEED (m/min.) TRAVEL LT	MECHANISM DUTY CYCLE (%) HOIST	MECHANISM DUTY CYCLE (%) CT	MECHANISM DUTY CYCLE (%) LT	MECHANISM ACCN(cm/sec^2) CT	MECHANISM ACCN(cm/sec^2) LT	SIZE OF TRACK BEAM	WHEEL LOAD PER PAIR OF WHEEL NOT TO EXCEED (t) R1	WHEEL LOAD PER PAIR OF WHEEL NOT TO EXCEED (t) R2	AMBIENT TEMP. (°C)	POWER SUPPLY	CONTROL VOLTAGE	TYPE OF HOOK	MIN.RADIUS OF TRACK BEAM	LOCATION	OPERATING FLOOR LEVEL (m)
1	5	7.0	1	II AS PER IS:3938–83	5	–	10	20	25	25	25	5	10	ISMB:350	DDE	DDE	50	415V+/–10% 3 PHASE AC 50HZ+3%–6%	110V AC SINGLE PHASE	SINGLE SHANK SWIVELLING AS PER IS:3815–69	STRAIGHT	CENTRAL STORE	ELECTRICAL PUSH BUTTON HANGING FROM HOIST

DIMENSIONAL REQUIREMENT

A mm	A1 mm	A2 mm	B mm	C mm	D mm	E mm	F mm	G mm	H1 mm	H2 mm	J mm	K mm
13110	1500	1500	2945	2945	9500	600	600	2600	7000	–	1800	*

FOR TENDER PURPOSE ONLY

NOTE:–

1. ALL DIMENSIONS ARE IN mm UNLESS OTHERWISE STATED.
2. IN CASE OF DISPARITY BETWEEN DATA MENTIONED IN DRAWING AND SPECIFICATION, CLARIFICATION SHALL BE OBTAINED FROM CONSULTANT.

NOTES :

REV/SEC	CONCURRED BY

REV.NO.	DATE	ZONE	DESCRIPTION	BY	VERIFIED

REVISIONS

REFERENCES	DRG. NO.

THIS DRAWING IS THE PROPERTY OF MECON AND IS ISSUED FOR THE SPECIFIC PROJECT MENTIONED THEREIN. THIS IS NOT TO BE COPIED OR USED FOR OTHER PROJECTS UNLESS EXPRESSLY PERMITTED BY MECON.

INDRADHANUSH GAS GRID LTD.

मेकॉन लिमिटेड

MECON LIMITED

SECTION	MH
LOCATION	
DESIGNED	I.SEN
DRAWN	
CHECKED AND VERIFIED	
APPROVED	DATE
	SIG.

NORTH – EAST GAS GRID PIPELINE PROJECT

CLEARANCE DIAGRAM FOR 5.0T UNDER SLUNG CRANE

SCALE – 1:10 | SHEET 1 OF 1 | REV. O

DRG.No. MEC/05/28/23UU/NGCS/TD/026

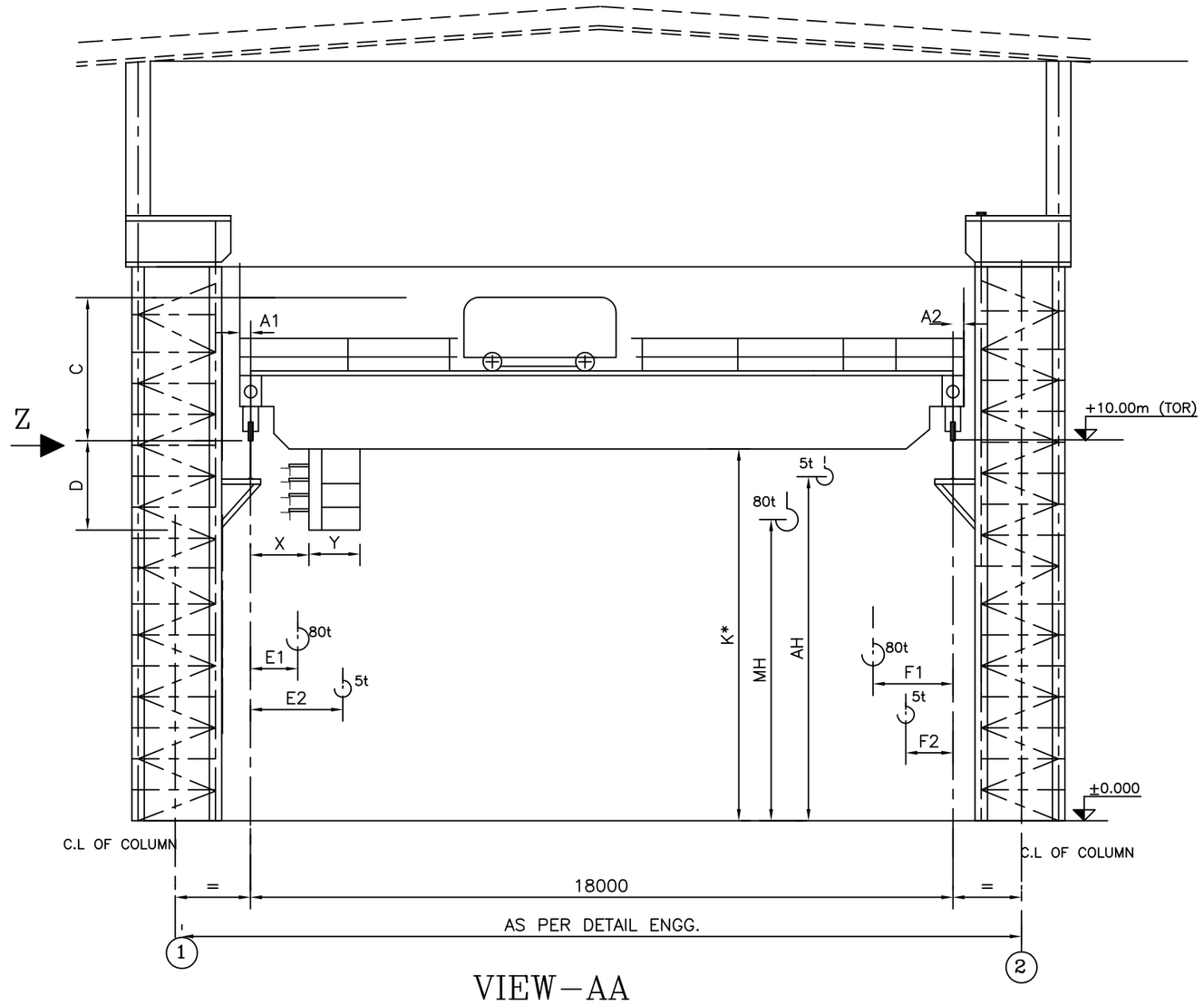

VIEW–AA

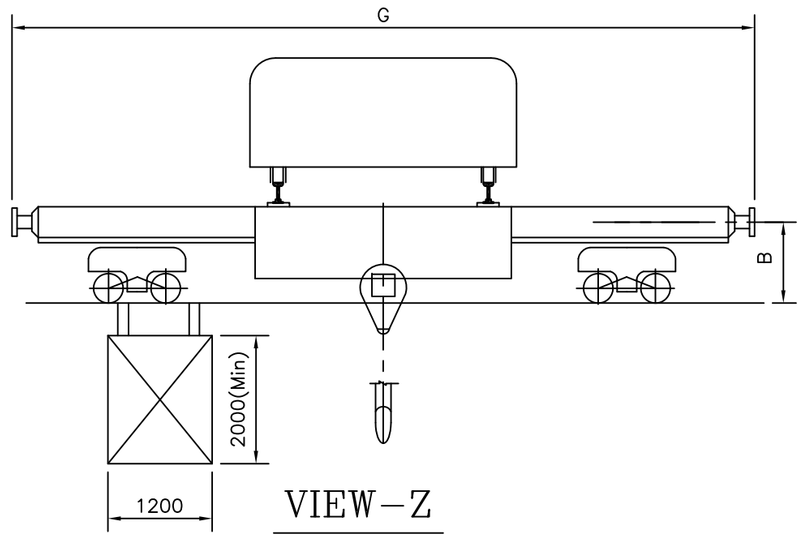

VIEW–Z

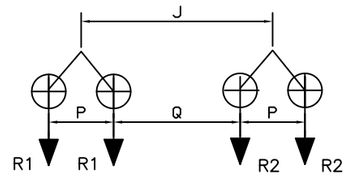

WHEEL LOAD DIAGRAM

TECHNICAL CHARACTERISTICS :–

EQUIPT. No.	No. OFF	SPAN (m)	LIFTING CAPACITY (t)		DUTY CLASS	SPEED (m/min.)						STARTS /hr.	TOTAL HEIGHT OF LIFTING HOOK (m)		WHEEL LOAD NOT TO EXCEED (t)		GANTRY RAIL TYPE	TYPE OF CONTROL	POWER SUPPLY	CONTROL VOLTAGE	TYPE OF HOOKS		PLACE OF INSTALLATION	AMBIENT TEMP. (°C)	GANTRY RAIL LEVEL	ATTACHMENT
			MAIN HOIST	AUX. HOIST		MAIN HOIST		AUX. HOIST		TRAVEL			MAIN HOIST	AUX. HOIST	R1	R2					MH	AH				
						MAIN	CREEP	MAIN	CREEP	TROLLEY C.T.	CRANE L.T.															
1	1	18.0	15	5	CLASS–IV/M8 AS PER IS:3177	5	0.5	10	1.0	15/1.5	30/3.0	DDE	7.5	8	DDE	DDE	DDE	JOYSTICK TYPE RADIO REMOTE CONTROL	415 V. ±10% 3ø AC 50HZ±5%	110 V 1 PHASE A.C.	SWIVELLING TYPE RAMSHORN TYPE FORGED HOOK AS PER IPSS	SINGLE SHANK SWIVELLING TYPE AS PER IPSS	MECHANICAL WORKSHOP	50°	10.0M	–
		DUTY CYCLE OF MECHANISM %				60		60		60	60															
		ACCELERATION (cm/s²)								10	15															

NOTE:–

1. ALL DIMENSIONS ARE IN mm UNLESS OTHERWISE STATED.
2. IN CASE OF DISPARITY BETWEEN DATA MENTIONED IN DRAWING AND SPECIFICATION, CLARIFICATION SHALL BE OBTAINED FROM CONSULTANT.

FOR TENDER PURPOSE ONLY

DIMENSIONAL REQUIREMENTS :–

A1	A2	B	C	D	E1	E2	F1	F2	G	MH	AH	J	K	L	X	Y	P	Q
400	400	1000	4000	2200	1700	2900	2500	1300	10000	7500	8000	5200	*	–	*	1200	1800	3400

NOTES :

REV. NO.	DATE	ZONE	DESCRIPTION	BY	VERIFIED

REVISIONS

REFERENCES | DRG. NO.

© THIS DRAWING IS THE PROPERTY OF MECON AND IS ISSUED FOR THE SPECIFIC PROJECT MENTIONED THEREIN. THIS IS NOT TO BE COPIED OR USED FOR OTHER PROJECTS UNLESS EXPRESSLY PERMITTED BY MECON.

CONCURRED BY

INDRADHANUSH GAS GRID LTD.

मेकॉन लिमिटेड

MECON LIMITED

SECTION	M.H.Section
LOCATION	
DESIGNED	
DRAWN	
CHECKED AND VERIFIED	
APPROVED	SIG.
	DATE

NORTH – EAST GAS GRID PIPELINE PROJECT

CLEARANCE DIAGRAM OF 15/5T X 18M SPAN DG E.O.T. CRANE

SCALE – N.T.S.

DRG.No. MEC/05/28/23UU/NGCS/TD/027

SHEET 1 OF 1

REV. O

DRG. NO. MEC/05/28/23UU/NGCS/TD/028

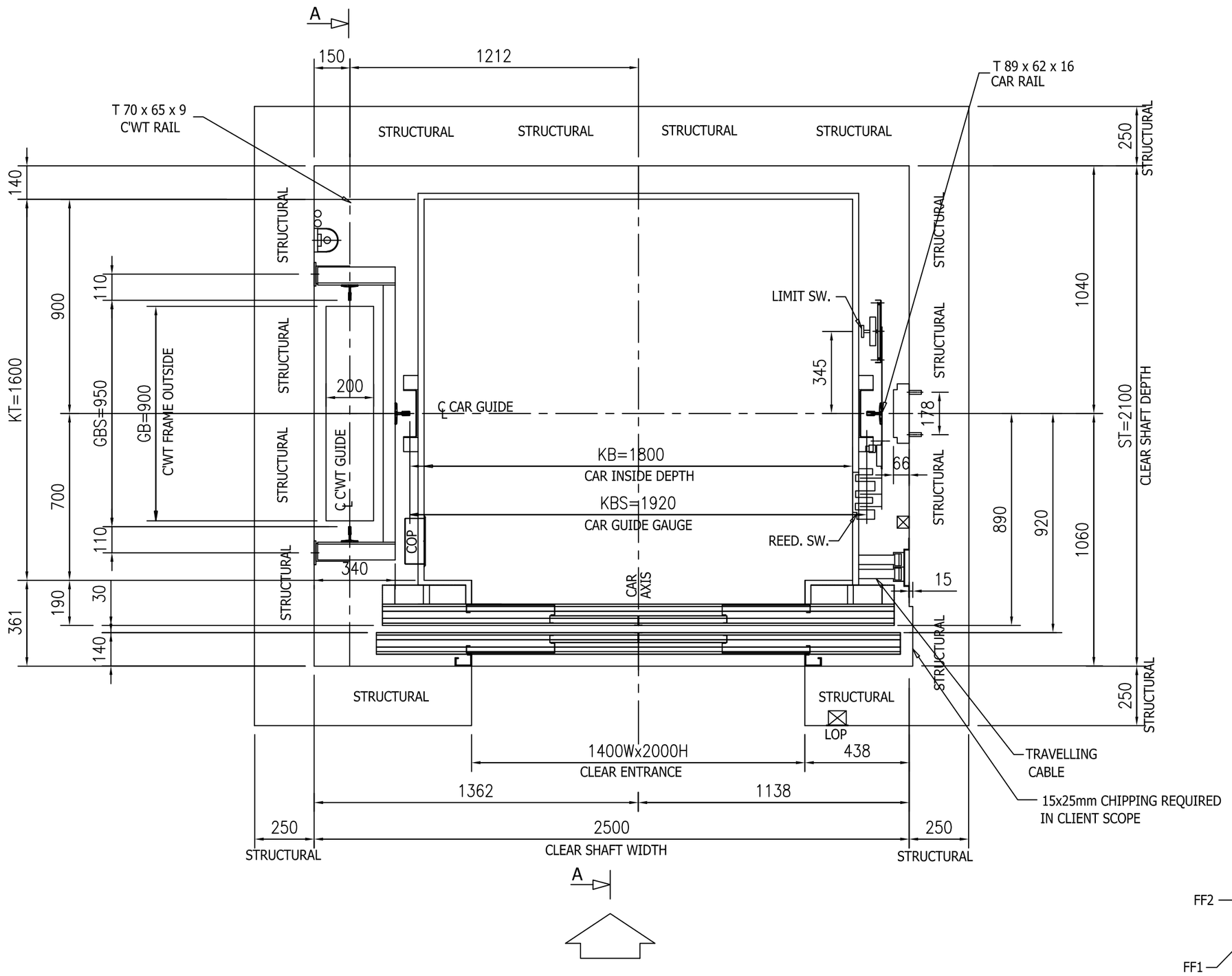
A
150
1212
T 70 x 65 x 9
C'WT RAIL
T 89 x 62 x 16
CAR RAIL
STRUCTURAL
STRUCTURAL
STRUCTURAL
STRUCTURAL
250
STRUCTURAL
140
STRUCTURAL
STRUCTURAL
STRUCTURAL
STRUCTURAL

DRG. NO. MEC/05/28/23UU/NGCS/TD/029

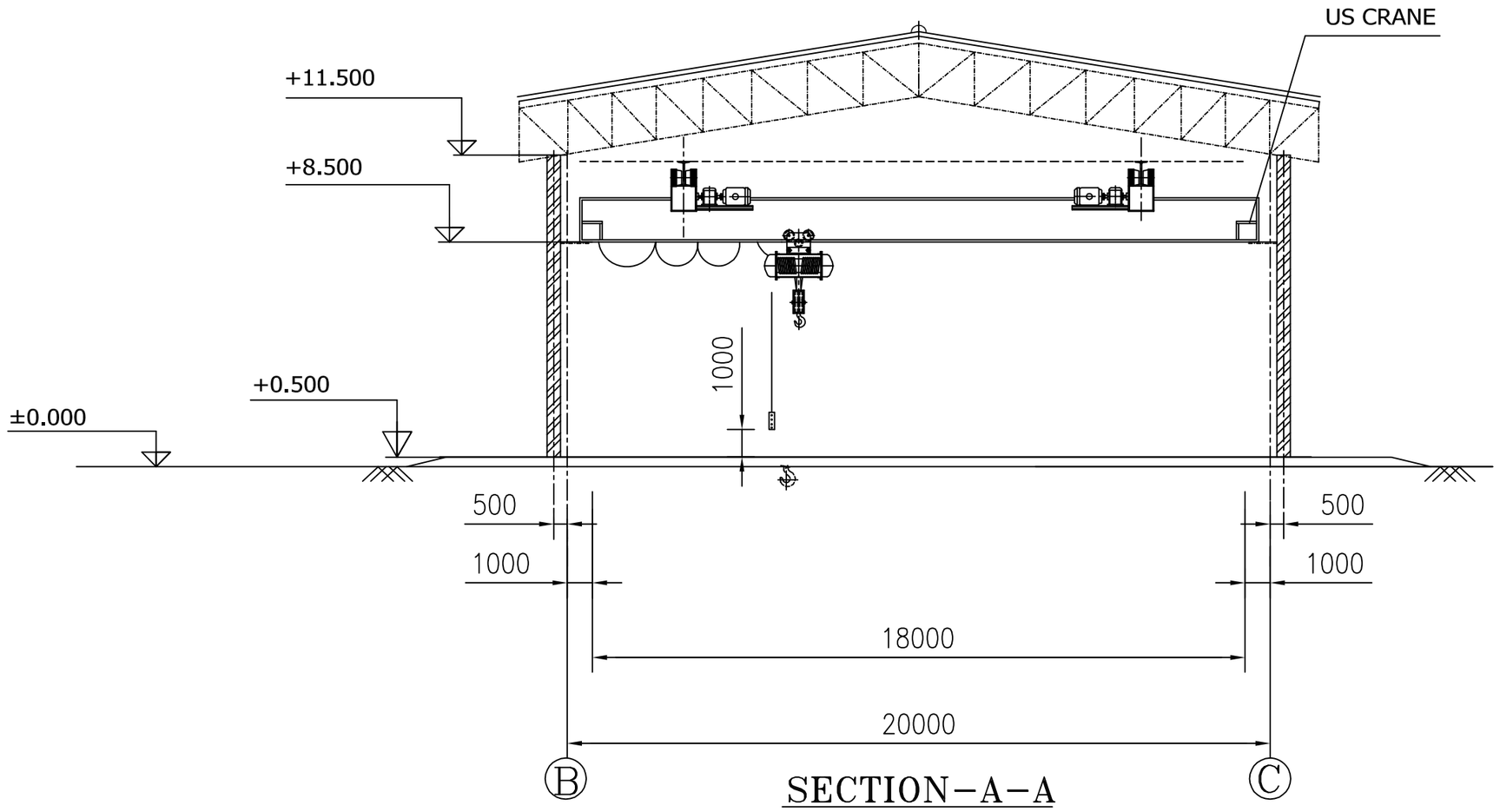

SECTION–A–A

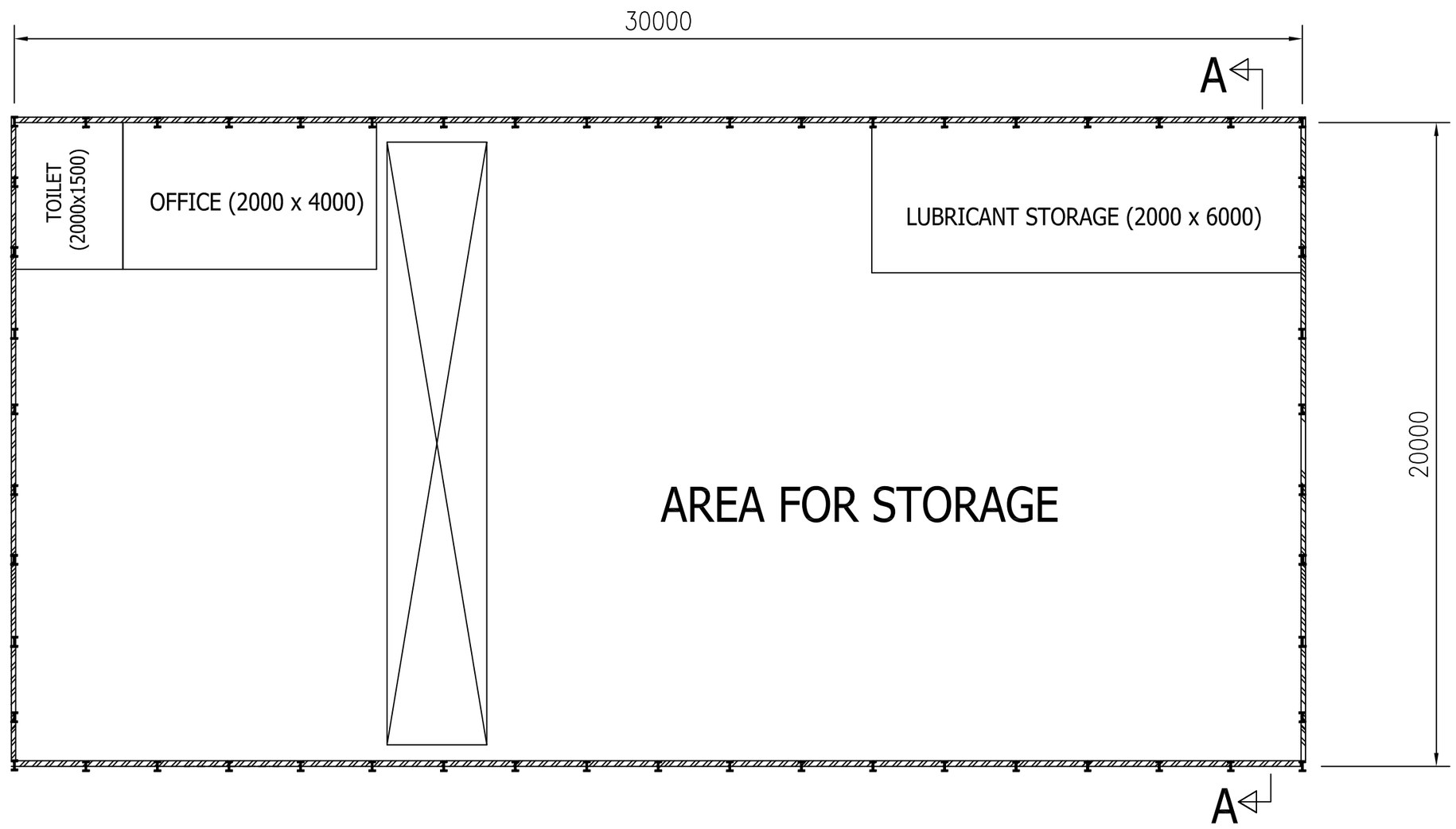

FOR TENDER PURPOSE ONLY

INDRADHANUSH GAS GRID LTD.

मेकॉन लिमिटेड

MECON LIMITED

NOTES :–

REV. NO.	DATE	ZONE	DESCRIPTION	BY	VERIFIED
			REVISION		

REV / SEC	ELECT.	INST./TELECOM	FIRE FIGHTING
	CONCURRED BY		

© Copyright MECON LIMITED – All rights reserved.
THIS DRAWING IS THE PROPERTY OF MECON AND ISSUED FOR THE SPECIFIC PROJECT MENTIONED THEREIN. THIS IS NOT TO BE COPIED OR USED FOR OTHER PROJECTS UNLESS EXPRESSLY PERMITTED BY MECON.

SECTION	OIL & GAS
LOCATION	DELHI
DESIGNED	ASHUTOSH
DRAWN	SUNIL
CHECKED AND VERIFIED	–
APPROVED	SIG
	DATE 18.03.2022

REFERENCES | DRG. NO.

NORTH – EAST GAS GRID PIPELINE PROJECT

CENTRAL STORE

SCALE : 1 : 100

DRG. NO. MEC/05/28/23UU/NGCS/TD/029

REV 0

DRG. NO. MEC/05/28/23UU/NGCS/TD/030

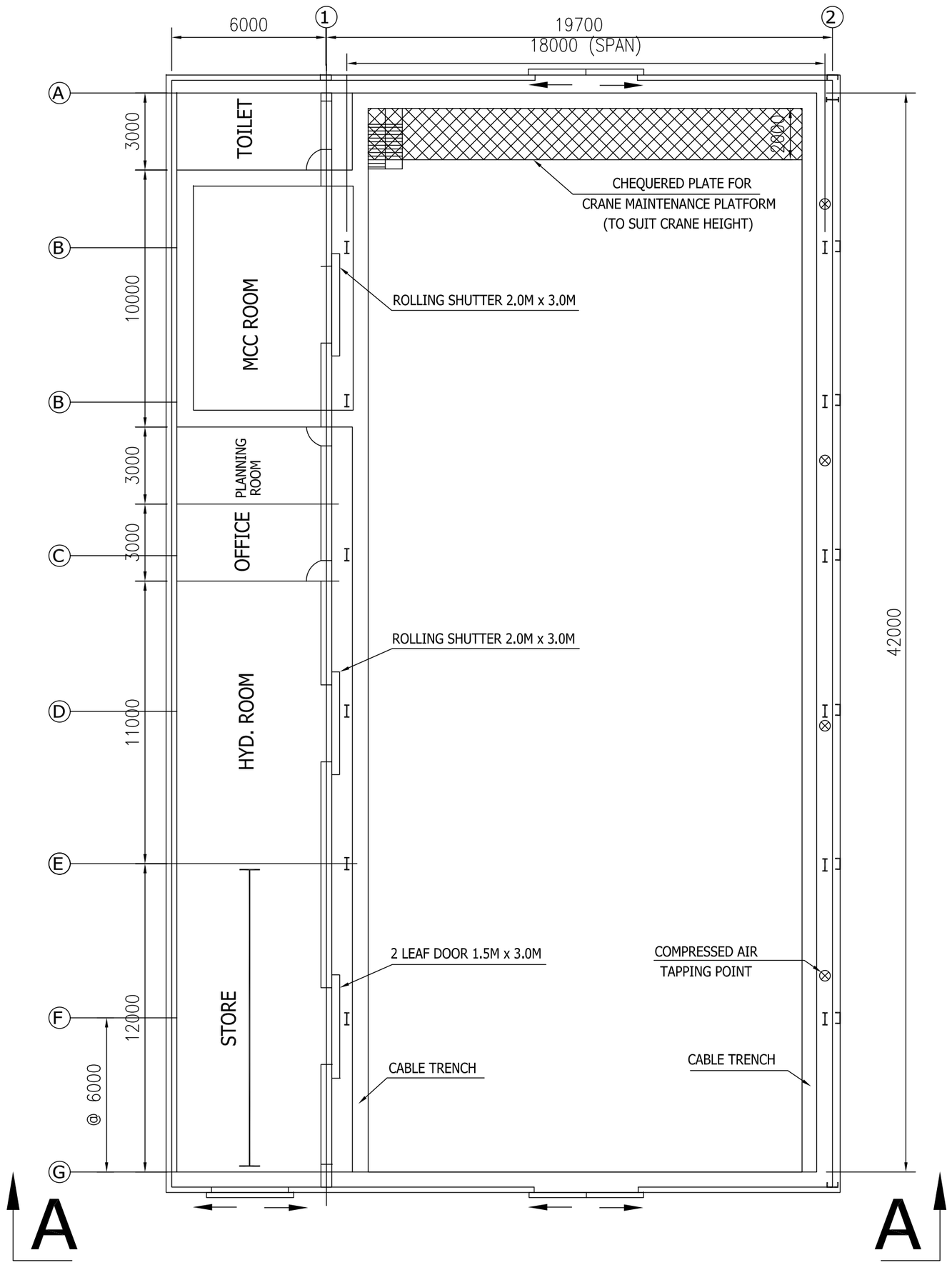

PLAN

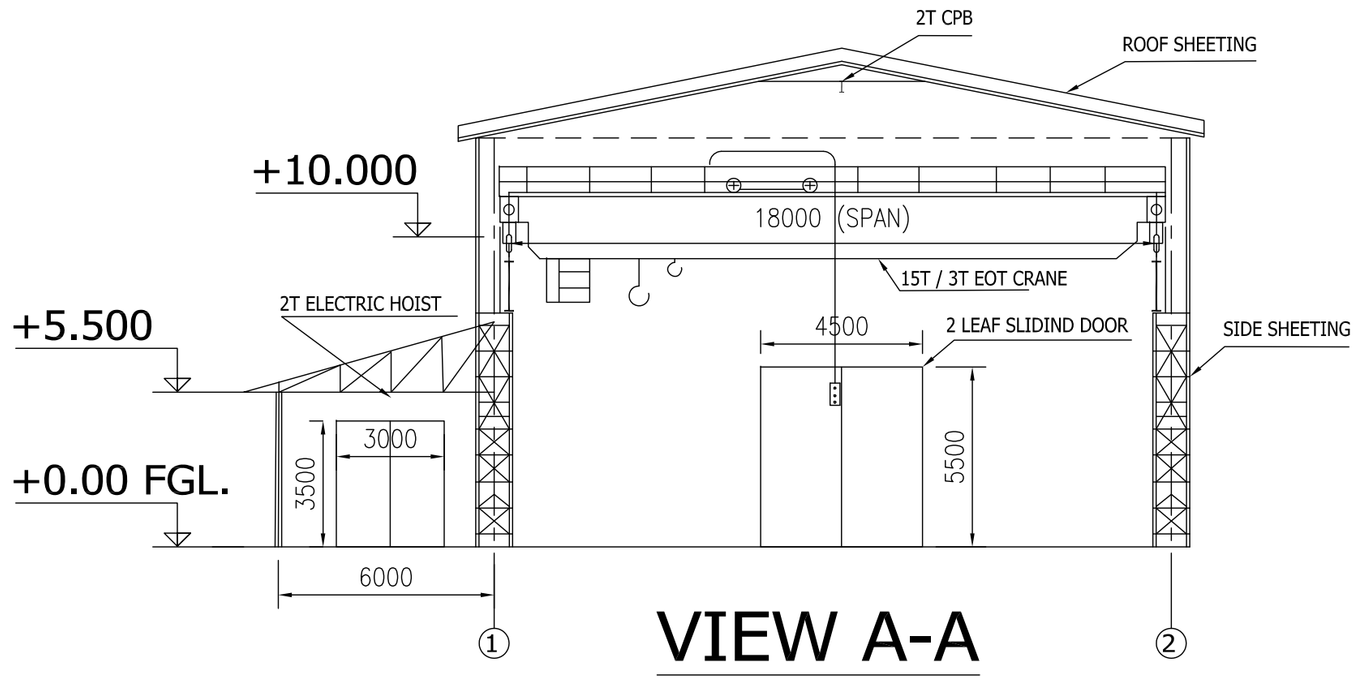

VIEW A-A

FOR TENDER PURPOSE ONLY

INDRADHANUSH GAS GRID LTD.

मेकॉन लिमिटेड

MECON LIMITED

NOTES :-

REV / SEC	ELECT.	INST./TELECOM	FIRE FIGHTING
	CONCURRED BY		

REV. NO.	DATE	ZONE	DESCRIPTION	BY	VERIFIED
			REVISION		

REFERENCES	DRG. NO.

© Copyright MECON LIMITED - All rights reserved.
THIS DRAWING IS THE PROPERTY OF MECON AND ISSUED FOR THE SPECIFIC PROJECT MENTIONED THEREIN. THIS IS NOT TO BE COPIED OR USED FOR OTHER PROJECTS UNLESS EXPRESSLY PERMITTED BY MECON.

SECTION	OIL & GAS
LOCATION	DELHI
DESIGNED	ASHUTOSH
DRAWN	SUNIL
CHECKED AND VERIFIED	-
APPROVED	SIG
	DATE 18.03.2022

NORTH - EAST GAS GRID PIPELINE PROJECT

MECHANICAL WORKSHOP

SCALE : 1 : 100

DRG. NO. MEC/05/28/23UU/NGCS/TD/030

REV 0

DRG. NO. MEC/05/28/23UU/NGCS/TD/031

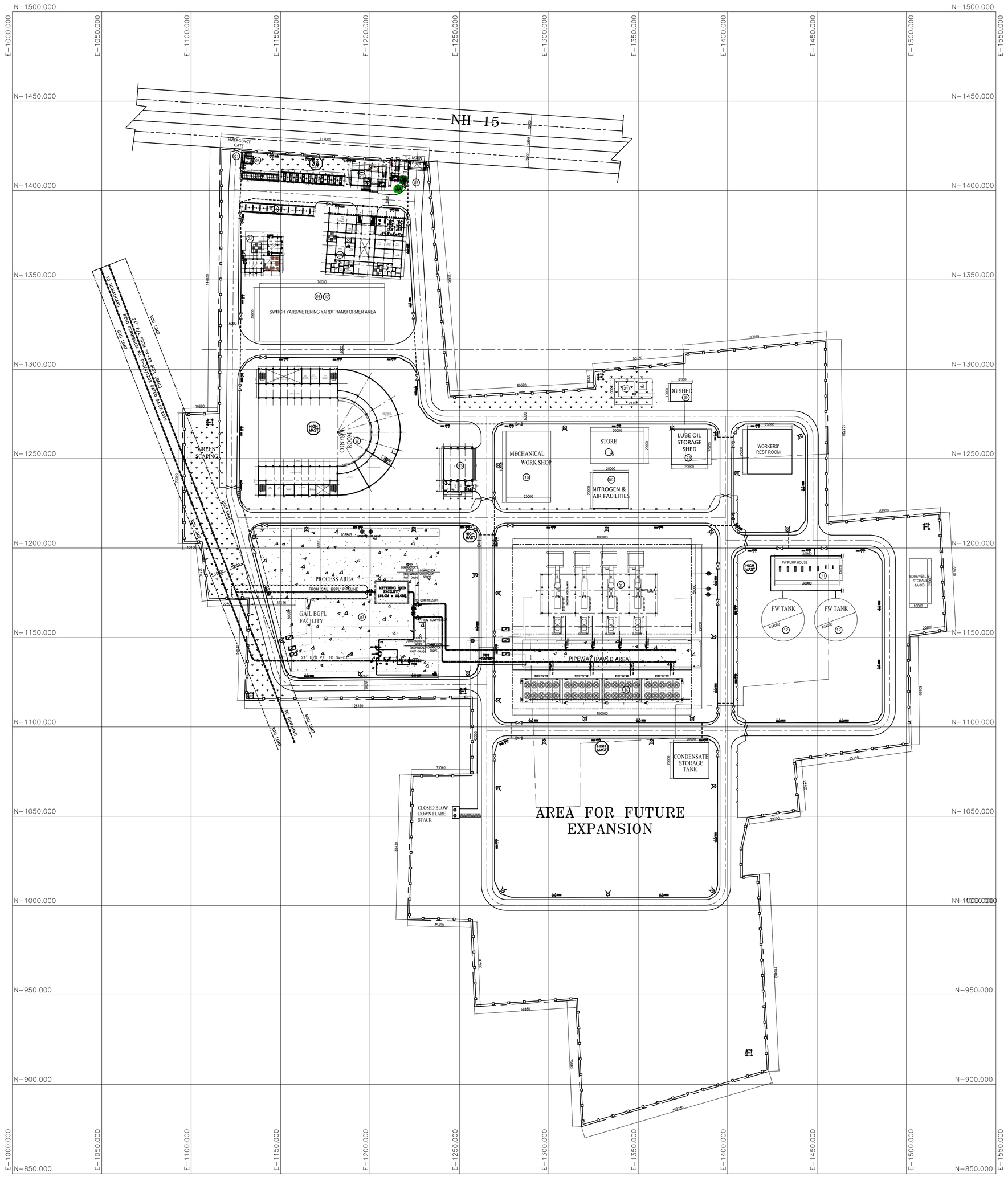

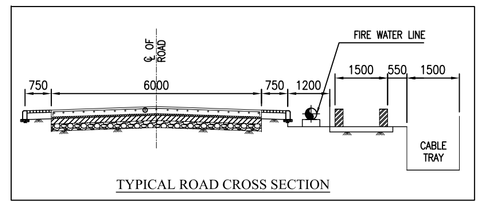

TYPICAL ROAD CROSS SECTION

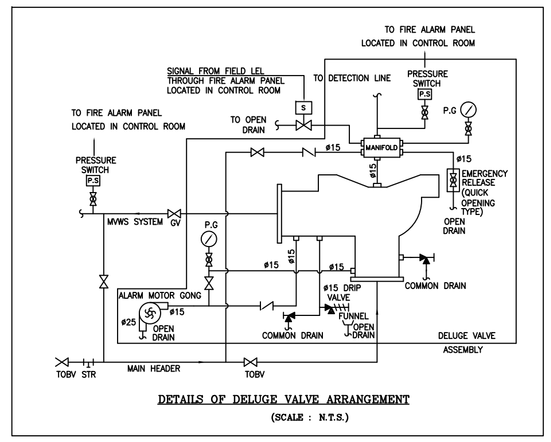

DETAILS OF DELUGE VALVE ARRANGEMENT
(SCALE : N.T.S.)

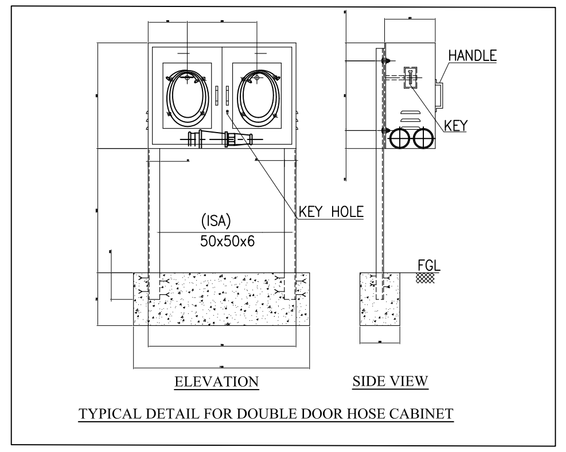

TYPICAL DETAIL FOR DOUBLE DOOR HOSE CABINET

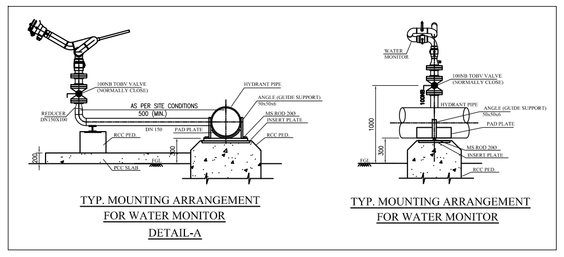

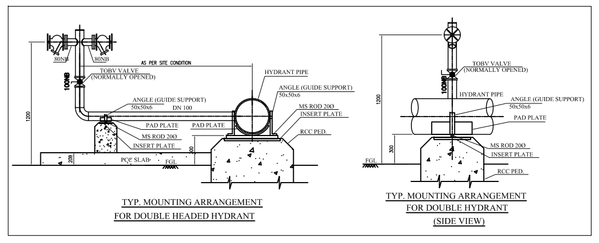

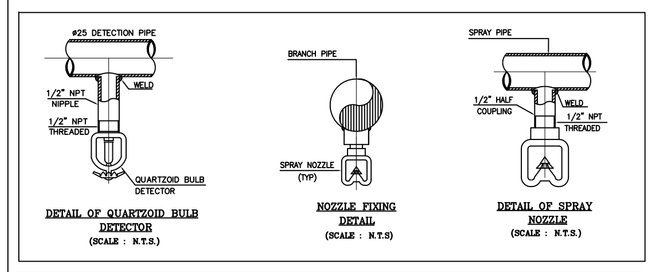

DETAIL OF QUARTZOID BULB DETECTOR
(SCALE : N.T.S.)

NOZZLE FIXING DETAIL
(SCALE : N.T.S)

DETAIL OF SPRAY NOZZLE
(SCALE : N.T.S.)

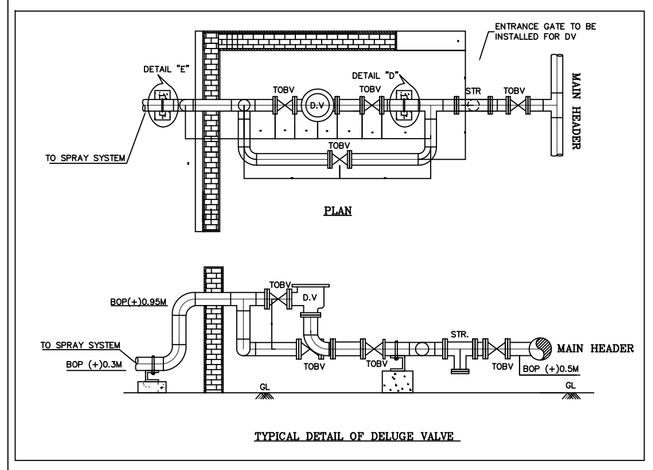

TYPICAL DETAIL OF DELUGE VALVE

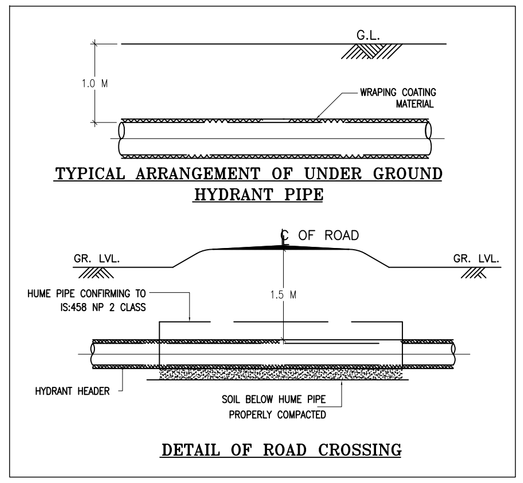

LEGEND -:

- A/G FIRE HYDRANT LINE
- U/G FIRE HYDRANT LINE
- WATER CUM FOAM MONITOR
- FIRE HYDRANT
- HOSE BOX
- STRAINER
- GATE VALVE IN FIRE WATER LINE
- TOB VALVE
- DELUGE VALVE

FOR TENDER PURPOSE ONLY

IGGL

INDRADHANUSH GAS GRID LTD.

मेकॉन लिमिटेड

MECON LIMITED

NOTES:
1. THE DRAWING IS NOT TO SCALE. WRITTEN DIMENSIONS TO BE FOLLOWED AS PER LAYOUT.
2. PIPE ELEVATIONS SHOWN IN THE DRAWING ARE TENTATIVE AND THE SAME SHALL BE MODIFIED IF REQUIRED TO SUIT AT SITE.
3. AS A MINIMUM, GATE ISOLATION VALVES SHALL BE PROVIDED AT 2 BRANCHES OF EACH TEE POINT IN FIRE WATER RINGMAIN.
4. ALL PIPES SHALL BE PAINTED FIRE RED BY SHADE No.536 OF IS:5.
5. STRUCTURAL STEEL SHALL CONFORM TO IS 2062 Gr.-A.
6. REMOTE ACTUATION OF DELUGE VALVE SHALL BE ENVISAGED.
7. QUANTITY & SIZE OF VALVES, PIPES, DV ETC. ARE TENTATIVE. ACTUAL QUANTITY & SIZE SHALL BE FINALISED BASED ON ACTUAL REQUIREMENT & DESIGN.
8. MWS SYSTEM SHOWN IN THE FIGURE ARE TENTATIVE ONLY. MWS SYSTEM SHALL BE DESIGNED AND PROVIDED FOR ALL THE AREAS OF PLANT AS PER OISD –226
9. FIRE WATER SYSTEM ALONGWITH PUMPS, TANKS, PIPES ETEC. SHALL BE DESIGNED AS PER OISD–226. PIPE SIZE SHALL BE SELECTED AS PER SOFTWARE CALCULATION (PIPENET)
10. ISOLATION VALVES(GATE VALVES) IN RING MAIN SHALL BE PROVIDED AS PER OISD – 226. TRIPPLE OFFSET VALVES SHALL BE PROVIDED FOR OPERARTION OF HYDRANTS & MONITORS.
11. BYE–PASS VALVE FOR MWS SYSTEM SHALL BE PROVIDED WITH STRAINERS OF SAME SIZE.
12. DELUGE VALVES (MWS & HWS), BYE PASS VALVES, HYDRANTS AND MONITORS SHALL BE PLACED ATLEAST 15 MTRS AWAY FROM AREA TO BE PROTECTED.
13. SUITABLE STRUCTURAL OPERATING PLATFORM FOR HYDRANTS, MONITORS, AND ACCESS FOR OPERATION OF VALVES SHALL BE PROVIDED BY THE BIDDER AS PER SITE CONDITION AND DIRECTIOS OF ECC..
14. INTERNAL COATING OF FIRE WATER PIPELINE SHALL BE PROVIDED AS PER SPECIFICATION.
15. AS A MINIMUM, GATE ISOLATION VALVES SHALL BE PROVIDED AT 2 BRANCHES OF EACH TEE POINT IN FIRE WATER RINGMAIN.

REV	DATE	DESCRIPTION	BY	VERIFIED
		REVISION		

REV / SEC — CONCURRED BY

REFERENCES — DOC NO./DRG. NO.

© Copyright MECON LIMITED – All rights reserved.
THIS DRAWING IS THE PROPERTY OF MECON AND ISSUED FOR THE SPECIFIC PROJECT MENTIONED THEREIN. THIS IS NOT TO BE COPIED OR USED FOR OTHER PROJECTS UNLESS EXPRESSLY PERMITTED BY MECON.

SECTION	OIL & GAS
LOCATION	DELHI
DESIGNED	C. SHEKHAR
DRAWN	SUNIL
CHECKED AND VERIFIED	S.Y. WAHID
APPROVED	SIG (Dr. R.K.DUTTA)
	DATE 19.01.2022

NORTH - EAST GAS GRID PIPELINE PROJECT

FIRE LAYOUT FOR COMPRESSOR STATION AT GUWAHATI

SCALE : N.T.S

DRG. NO. MEC/05/28/23UU/NGCS/TD/031

REV 0