DRG. NO. MEC/23UU/05/28/M/002/0015

UNIT-40

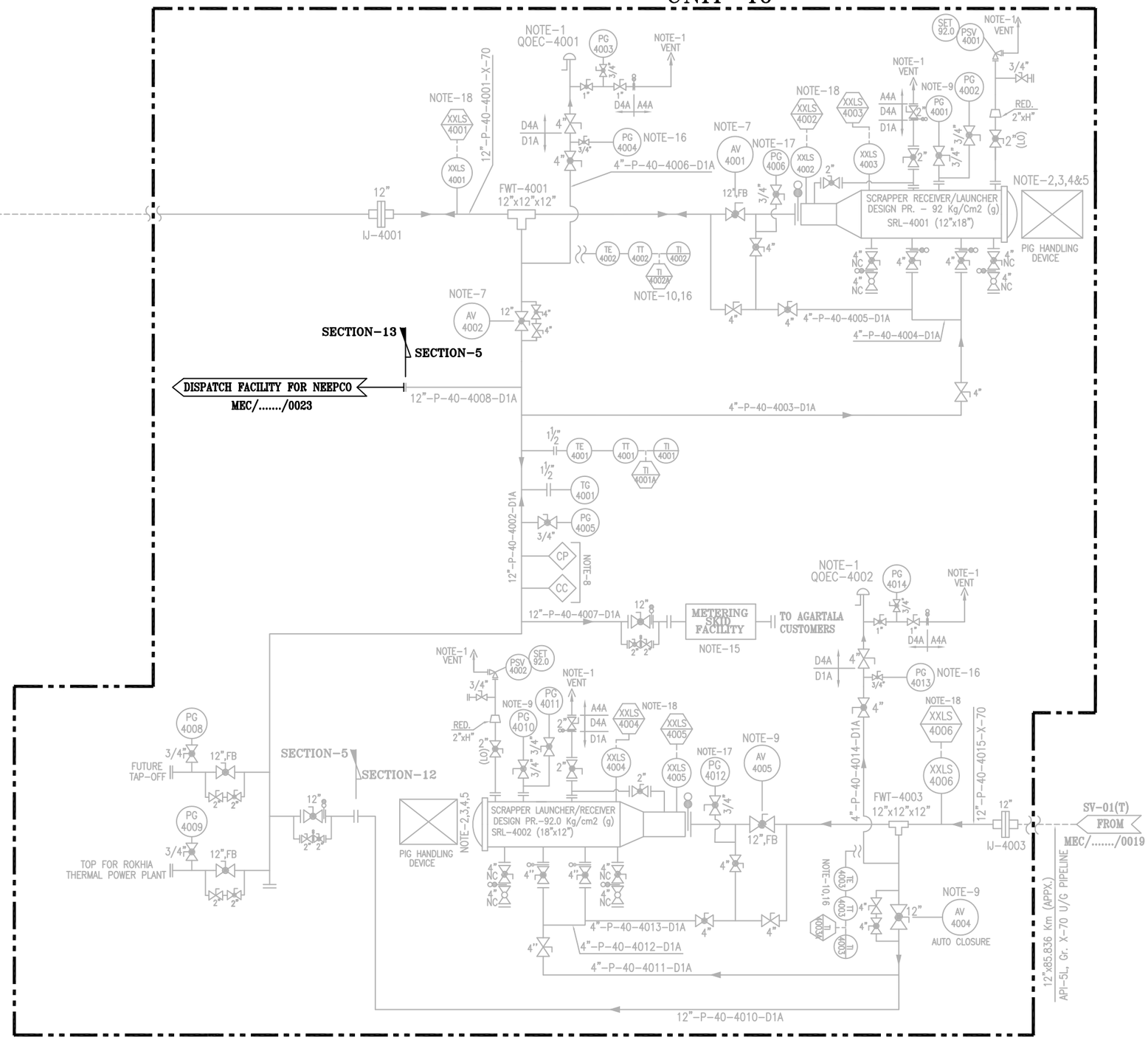

RECEIVING TERMINAL CUM TAP-OFF CUM INJECTION POINT CUM IPS AT AGARTALA
(CH. 117.886 Km (APPROX) FROM PANISAGAR)
(CH. ~0 KMS. FROM RT CUM TAP-OFF CUM INJECTION POINT CUM IPS AT AGARTALA)

NOTES:

1. ALL VENTS SHALL BE LOCATED MIN. HEIGHT OF 3 MTR. ABOVE THE HIGHEST OPERATING LEVEL.
2. NOTE DELETED.
3. NOTE DELETED.
4. NOTE DELETED.
5. NOTE DELETED.
6. GAS DETECTORS TO BE PROVIDED NEAR FILTERS, FLOW METERS & SCRAPPER TRAPS. SIGNAL FROM GAS DETECTOR TO BE TAKEN IN CONTROL ROOM.
7. NOTE DELETED.
8. NOTE DELETED.
9. NOTE DELETED.
10. NOTE DELETED.
11. ALL BALL VALVES WITH BUTT WELDED END SHALL HAVE FULLY WELDED BODY.
12. ALL HIGHEST POINT & LOWEST POINT OF THE STATION PIPING SHALL BE PROVIDED WITH VENT & DRAIN FACILITY & SAME SHALL BE TAKEN CARE DURING PREPARATION OF GAD.
13. NOTE DELETED.
14. NOTE DELETED.
15. NOTE DELETED.
16. NOTE DELETED.
17. NOTE DELETED.
18. NOTE DELETED.

PROCESS DATA

FLUID: NATURAL GAS(DRY)/RLNG
FLOW: - MMSCMD (APPX.)
OPER. PRESS.: - KG/CM2(G)
DESIGN PRESS.: 92 KG/CM2(G)
DESIGN CLASS: 600#

TEMPERATURE
WORKING : 0°-55° C
DESIGN : -29 TO 65°C

LINE LEGEND

- PROPOSED LINE A/G
- PROPOSED LINE U/G
- LINE A/G (OTHER'S SCOPE)
- LINE U/G (OTHER'S SCOPE)

12"-P-40-4001-D1A
8"-P-40-4001-D1A
- MATERIAL SPEC.
- LINE NO.
- UNIT NO.
- PROCESS FLUID (NG/RLNG)
- LINE SIZE (NOMINAL)

VALVE LEGEND

- BALL VALVE FLANGE END
- BALL VALVE BW END/UPTO 1½" SW END.
- PLUG VALVE BW END/UPTO 1½" SW END.
- PLUG VALVE FLANGE END
- GLOBE VALVE.

INDRADHANUSH GAS GRID LIMITED

मेकॉन लिमिटेड

MECON LIMITED

REV	DATE	ZONE	DESCRIPTION	BY	VERIFIED
2	18.12.20		GENERAL REVISION	UMAR	AKB
1	18.03.20		AS PER REVISED SCHEMATIC/ GENERAL REVISION	RASHMI	AKB
0	26.08.19		AS PER REVISED SCHEMATIC/ GENERAL REVISION	UMAR	AKB
A	20.06.19		FOR COMMENT PURPOSE	UMAR	AKB

REFERENCES	DRG.NO.
PIPELINE SCHEMATIC ROUTE DIAGRAM	MEC/23UU/05/28/M/000/0021, REV - 2, SHEET 13 OF 14

© Copyright MECON LIMITED - All rights reserved.
THIS DRAWING IS THE PROPERTY OF MECON AND ISSUED FOR THE SPECIFIC PROJECT MENTIONED THEREIN. THIS IS NOT TO BE COPIED OR USED FOR OTHER PROJECTS UNLESS EXPRESSLY PERMITTED BY MECON.

REV / SEC	CONCURRED BY
	PIPING
	ELEC.
	INST.

SECTION-13

SECTION	OIL & GAS
LOCATION	DELHI
DESIGNED	UMAR
DRAWN	UMAR
CHECKED AND VERIFIED	AKB
APPROVED	SIG A. GANGAL
DATE	17.04.21

NORTH EAST GAS GRID (PHASE-II P/L SECTION)

P&ID OF RT CUM TAP-OFF CUM INJECTION POINT CUM FUTURE IPS AT AGARTALA

SCALE : NTS

DRG. NO. MEC/23UU/05/28/M/002/0015 REV 2

DRG. NO. MEC/23UU/05/28/M/002/0023

UNIT-40

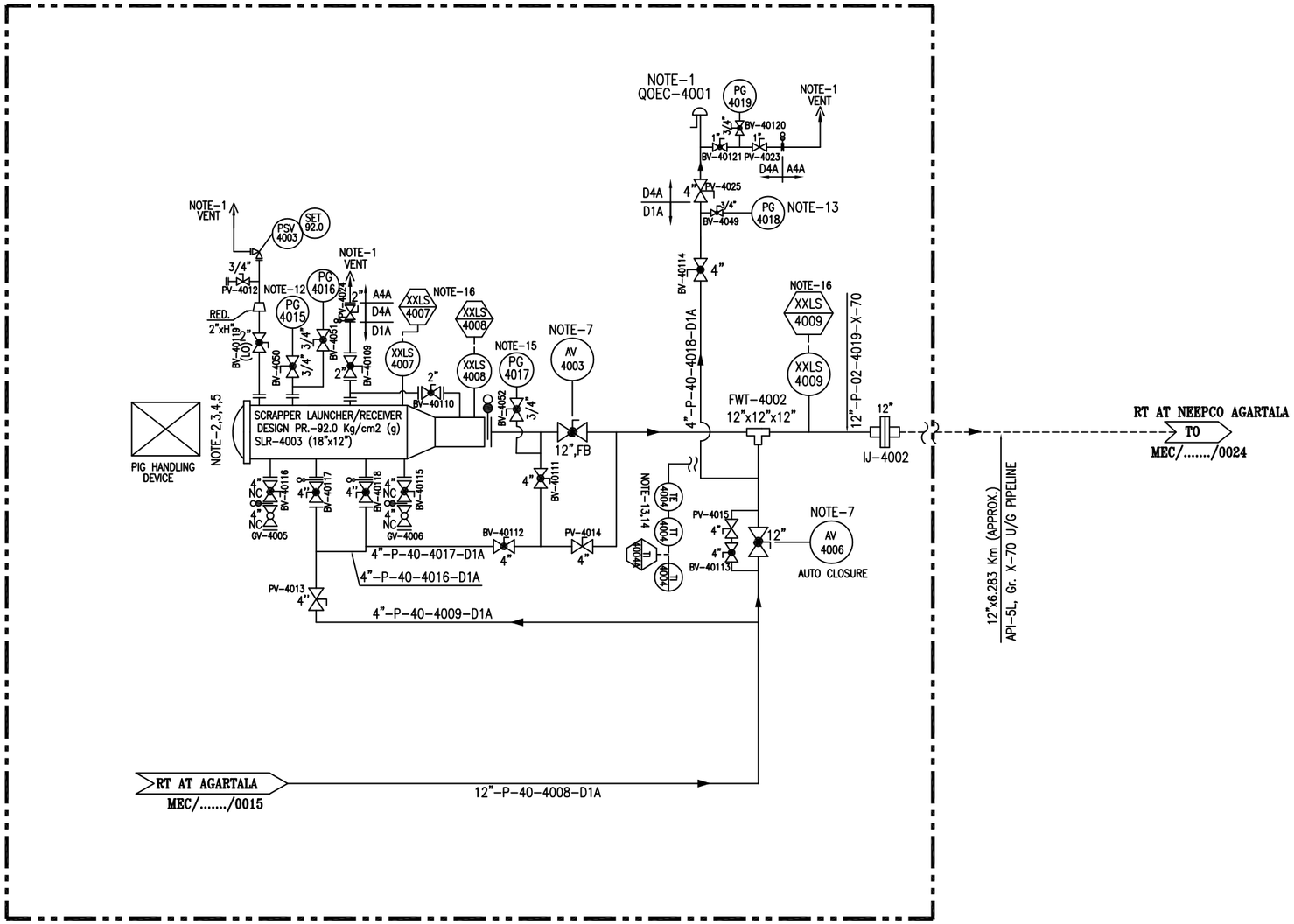

DISPATCH FACILITY FOR 12"NBX6.283 KMS. P/L TO NEEPCO AGARTALA AT RT AGARTALA
(CH. ~0.0 KMS. FROM RT AT AGARTALA)

TAG NUMBERS ASSOCIATED WITH AV VALVES			
AV VALVES	ITEM	SIZE	TAG NUMBERS
AV-4003	BALL VALVES	3/4"(FB,SW) 2"(FB,BW)	BV-4053 TO BV-4058 BV-40101 TO BV-40104
AV-4006	BALL VALVES	3/4"(FB,SW) 2"(FB,BW)	BV-4059 TO BV-4064 BV-40105 TO BV-40108

NOTES:

1. ALL VENTS SHALL BE LOCATED MIN. HEIGHT OF 3 MTR. ABOVE THE HIGHEST OPERATING LEVEL.
2. SCRAPPER LAUNCHER/RECEIVER SHALL HAVE SCRAPPER HANDLING FACILITY.
3. SCRAPPER LAUNCHER/RECEIVER SHALL BE SUITABLE FOR HANDLING INTELLIGENT PIGS.
4. SCRAPPER LAUNCHER/RECEIVER SHALL HAVE QUICK OPPENING CLOSURE.
5. SCRAPPER DOOR MECHANISM TO BE CONSTRUCTED SUCH THAT THE DOOR CAN NOT BE OPENED UNLESS SCRAPPER TRAP IS FULLY DEPRESSURISED.
6. GAS DETECTORS TO BE PROVIDED NEAR FILTERS, FLOW METERS & SCRAPPER TRAPS. SIGNAL FROM GAS DETECTOR TO BE TAKEN IN CONTROL ROOM.
7. FOR SV, HOV & AV DETAIL REFER DRG. NO. MEC/23UU/05/28/M/002/0016.
8. NOTE DELETED.
9. ALL BALL VALVES WITH BUTT WELDED END SHALL HAVE FULLY WELDED BODY.
10. ALL HIGHEST POINT & LOWEST POINT OF THE STATION PIPING SHALL BE PROVIDED WITH VENT & DRAIN FACILITY & SAME SHALL BE TAKEN CARE DURING PREPARATION OF GAD.
11. SUPPORT SHALL BE PROVIDED BEFORE & AFTER MAINLINE IJ.
12. PG-4015 SHALL HAVE A RANGE OF 0-1 KG/CM2(g) WITH A GAUGE SAVER.
13. DEPRESSURIZATION VALVE SHALL BE LOCATED IN SUCH A WAY THAT PG-4018 & TI-4004 CAN BE READ DURING VENTING. 1" VALVE ON VENT LINE OF THE QOEC LINE SHALL BE APPROCHABLE FOR OPERATION.
14. DIRECT SURFACE CONTACT TYPE.
15. PG-4017 SHALL HAVE A RANGE OF 0-5 KG/CM2(G) WITH A GAUGE SAVER & LEAST COUNT OF 0.1 KG/CM2(G).
16. ALL PIG SIGNALLER SHALL BE OF NON-INTRUSIVE TYPE.

PROCESS DATA

FLUID: NATURAL GAS(DRY)/RLNG
FLOW: - MMSCMD (APPX.)
OPER. PRESS.: - KG/CM2(G)
DESIGN PRESS.: 92 KG/CM2(G)
DESIGN CLASS: 600#

TEMPERATURE
WORKING : 0°-55° C
DESIGN -29 TO 65°C

LINE LEGEND

PROPOSED LINE A/G
PROPOSED LINE U/G

12"-P-40-4008-D1A
- MATERIAL SPEC.
- LINE NO.
- UNIT NO.
- PROCESS FLUID (NG/RLNG)
- LINE SIZE (NOMINAL)

VALVE LEGEND

- BALL VALVE FLANGE END
- BALL VALVE BW END/UPTO 1½" SW END.
- PLUG VALVE BW END/UPTO 1½" SW END.
- PLUG VALVE FLANGE END
- GLOBE VALVE.

INDRADHANUSH GAS GRID LIMITED

मेकॉन लिमिटेड

MECON LIMITED

REV					
	PIPING				
	ELEC.				
	INST.				
SEC	CONCURRED BY				

SECTION-13

REV.NO	DATE	ZONE	DESCRIPTION	BY	VERIFIED
			REVISION		

PIPELINE SCHEMATIC ROUTE DIAGRAM — MEC/23UU/05/28/M/000/0021, REV - 3, SHEET 13 OF 14

REFERENCES — DRG.NO.

© Copyright MECON LIMITED - All rights reserved.

THIS DRAWING IS THE PROPERTY OF MECON AND ISSUED FOR THE SPECIFIC PROJECT MENTIONED THEREIN. THIS IS NOT TO BE COPIED OR USED FOR OTHER PROJECTS UNLESS EXPRESSLY PERMITTED BY MECON.

SECTION	OIL & GAS
LOCATION	DELHI
DESIGNED	UMAR
DRAWN	UMAR
CHECKED AND VERIFIED	AKB
APPROVED	SIG A. GANGAL
DATE	17.04.21

NORTH EAST GAS GRID (PHASE-II P/L SECTION)

P & ID FOR DISPATCH FACILITY FOR 12"NBX6.283 KMS. P/L TO NEEPCO AT RT AGARTALA

SCALE : NTS

DRG. NO. MEC/23UU/05/28/M/002/0023 — REV 0

UNIT-41

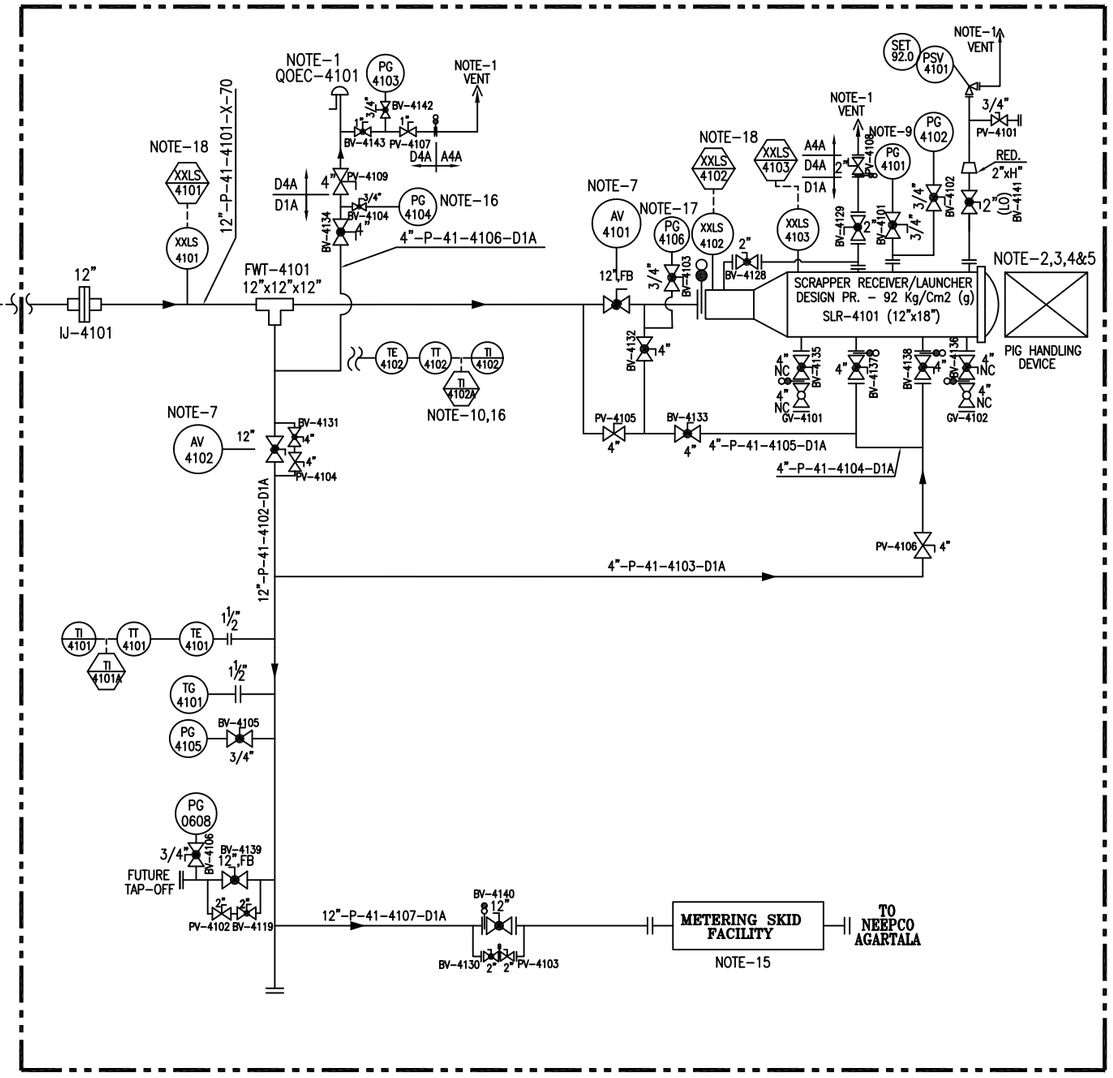

RECEIVING TERMINAL AT NEEPCO AGARTALA
(CH. ~6.283 KMS. FROM RT AT AGARTALA)

TAG NUMBERS ASSOCIATED WITH AV VALVES			
AV VALVES	ITEM	SIZE	TAG NUMBERS
AV-4101	BALL VALVES	3/4"(FB,SW) 2"(FB,BW)	BV-4107 TO BV-4112 BV-4120 TO BV-4123
AV-4102	BALL VALVES	3/4"(FB,SW) 2"(FB,BW)	BV-4113 TO BV-4118 BV-4124 TO BV-4127

NOTES:

1. ALL VENTS SHALL BE LOCATED MIN. HEIGHT OF 3 MTR. ABOVE THE HIGHEST OPERATING LEVEL.
2. SCRAPPER LAUNCHER/RECEIVER SHALL HAVE SCRAPPER HANDLING FACILITY.
3. SCRAPPER LAUNCHER/RECEIVER SHALL BE SUITABLE FOR HANDLING INTELLIGENT PIGS.
4. SCRAPPER LAUNCHER/RECEIVER SHALL HAVE QUICK OPPENING CLOSURE.
5. SCRAPPER DOOR MECHANISM TO BE CONSTRUCTED SUCH THAT THE DOOR CAN NOT BE OPENED UNLESS SCRAPPER TRAP IS FULLY DEPRESSURISED.
6. GAS DETECTORS TO BE PROVIDED NEAR FILTERS, FLOW METERS & SCRAPPER TRAPS. SIGNAL FROM GAS DETECTOR TO BE TAKEN IN CONTROL ROOM.
7. FOR SV, HOV & AV DETAIL REFER DRG. NO. MEC/23UU/05/28/M/002/0016.
8. NOTE DELETED.
9. PG-4101 SHALL HAVE A RANGE OF 0-1 KG/CM2(g) WITH A GAUGE SAVER.
10. DIRECT SURFACE CONTACT TYPE.
11. ALL BALL VALVES WITH BUTT WELDED END SHALL HAVE FULLY WELDED BODY.
12. ALL HIGHEST POINT & LOWEST POINT OF THE STATION PIPING SHALL BE PROVIDED WITH VENT & DRAIN FACILITY & SAME SHALL BE TAKEN CARE DURING PREPARATION OF GAD.
13. NOTE DELETED.
14. SUPPORT SHALL BE PROVIDED BEFORE & AFTER MAINLINE IJ.
15. CUSTODY TRANSFER METERING SKID P&ID SHALL BE PROVIDED SEPARATELY.
16. DEPRESSURIZATION VALVE SHALL BE LOCATED IN SUCH A WAY THAT PG-4104 & TI-4102 CAN BE READ DURING VENTING. 1" VALVE ON VENT LINE OF THE QOEC LINE SHALL BE APPROCHABLE FOR OPERATION.
17. PG-4106 SHALL HAVE A RANGE OF 0-5 KG/CM2(G) WITH A GAUGE SAVER & LEAST COUNT OF 0.1 KG/CM2(G).
18. ALL PIG SIGNALLER SHALL BE OF NON-INTRUSIVE TYPE.

PROCESS DATA

FLUID: NATURAL GAS(DRY)/RLNG
FLOW: - MMSCMD (APPX.)
OPER. PRESS.: - KG/CM2(G)
DESIGN PRESS.: 92 KG/CM2(G)
DESIGN CLASS: 600#

TEMPERATURE
WORKING : 0°-55° C
DESIGN : -29 TO 65°C

LINE LEGEND

PROPOSED LINE A/G
PROPOSED LINE U/G

12"-P-41-4101-D1A
- MATERIAL SPEC.
- LINE NO.
- UNIT NO.
- PROCESS FLUID (NG/RLNG)
- LINE SIZE (NOMINAL)

VALVE LEGEND

BALL VALVE FLANGE END
BALL VALVE BW END/UPTO 1½" SW END.
PLUG VALVE BW END/UPTO 1½" SW END.
PLUG VALVE FLANGE END
GLOBE VALVE.

INDRADHANUSH GAS GRID LIMITED
मेकॉन लिमिटेड
MECON LIMITED

REV	SEC	PIPING	ELEC.	INST.	CONCURRED BY

SECTION-13

REV.NO	DATE	ZONE	DESCRIPTION	BY	VERIFIED

PIPELINE SCHEMATIC ROUTE DIAGRAM — MEC/23UU/05/28/M/000/0021, REV - 3, SHEET 13 OF 14

REFERENCES — DRG.NO.

© Copyright MECON LIMITED - All rights reserved.
THIS DRAWING IS THE PROPERTY OF MECON AND ISSUED FOR THE SPECIFIC PROJECT MENTIONED THEREIN. THIS IS NOT TO BE COPIED OR USED FOR OTHER PROJECTS UNLESS EXPRESSLY PERMITTED BY MECON.

SECTION	OIL & GAS
LOCATION	DELHI
DESIGNED	UMAR
DRAWN	UMAR
CHECKED AND VERIFIED	AKB
APPROVED	SIG A. GANGAL
DATE	17.04.21

NORTH EAST GAS GRID (PHASE-II P/L SECTION)

P&ID FOR RECEIVING TERMINAL AT NEEPCO AGARTALA

SCALE : NTS
DRG. NO. MEC/23UU/05/28/M/002/0024
REV 0

DRG. NO. MEC/23UU/05/28/M/002/0016

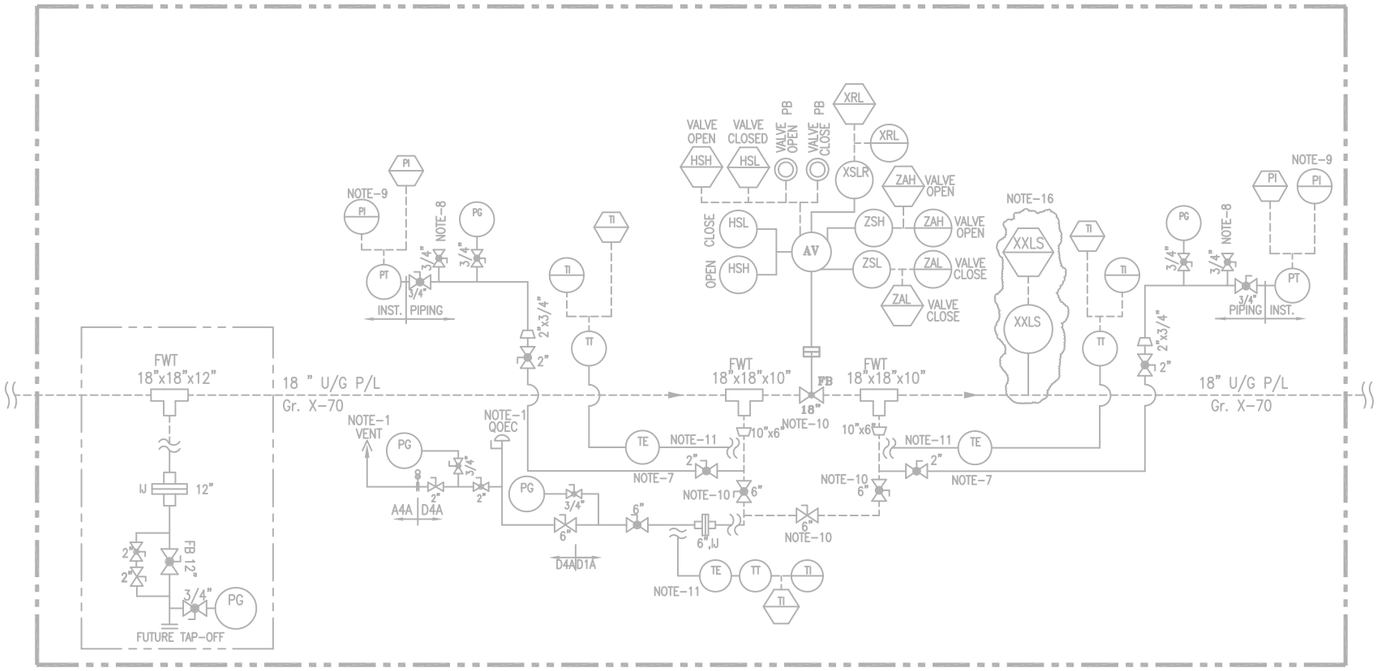

TYPICAL ARRANGEMENT FOR 18" SV (REMOTE OPERATED)

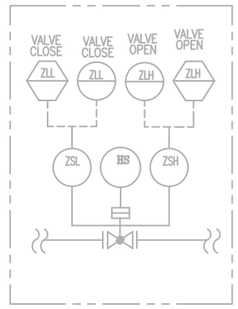

TYPICAL HOV ARRANGEMENT

NOTE:-

1. NOTE DELETED.
2. NOTE DELETED.
3. ALL AV (ACTUATED VALVES) SHALL BE FAILED TO STAY PUT TYPE VALVE.
4. NOTE DELETED.
5. NOTE DELETED.
6. NOTE DELETED.
7. ALL PG, PT CONNECTION SHALL BE TAKEN FROM 2" TWO ISOLATION VALVES AND THEN AFTER IT SHOULD BE CONVERTED TO REQUIRE NPT CONNECTION.
8. GAS TAPPING FOR VALVE ACTUATOR.
9. FOR PG & PT DETAIL REFER MECON STANDARD DRG.
10. NOTE DELETED.
11. NOTE DELETED.
12. ALL BALL VALVES WITH BUTT WELDED END SHALL HAVE FULLY WELDED BODY.
13. ALL HIGHEST POINT & LOWEST POINT OF THE STATION PIPING SHALL BE PROVIDED WITH VENT & DRAIN FACILITY & SAME SHALL BE TAKEN CARE DURING PREPARATION OF GAD.
14. NOTE DELETED.
15. NOTE DELETED.
16. NOTE DELETED.

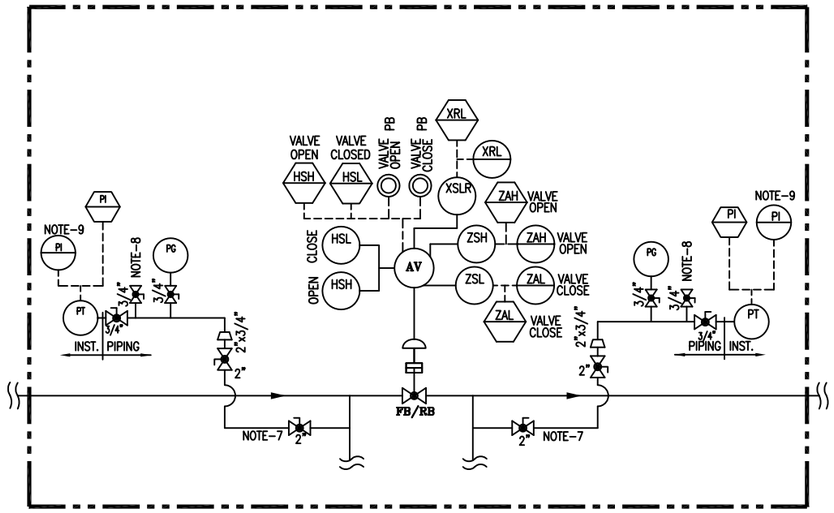

TYPICAL ARRANGEMENT FOR AV

LINE LEGEND

- PROPOSED LINE A/G
- PROPOSED LINE U/G
- LINE A/G (OTHER'S SCOPE)
- LINE U/G (OTHER'S SCOPE)

VALVE LEGEND

- BALL VALVE FLANGE END
- BALL VALVE BW END/UPTO 1½" SW END.
- PLUG VALVE BW END/UPTO 1½" SW END.
- PLUG VALVE FLANGE END
- GLOBE VALVE.

INDRADHANUSH GAS GRID LIMITED

मेकॉन लिमिटेड

MECON LIMITED

REV	DATE	ZONE	DESCRIPTION	BY	VERIFIED
1	18.12.20		GENERAL REVISION	UMAR	AKB
0	26.08.19		AS PER REVISED SCHEMATIC/ GENERAL REVISION	UMAR	AKB
A	20.06.19		FOR COMMENT PURPOSE	UMAR	AKB

REVISION

REFERENCES	DRG.NO.
PIPELINE SCHEMATIC ROUTE DIAGRAM	MEC/23UU/05/28/M/000/0021 , REV – 2, SHEET 13 OF 14

© Copyright MECON LIMITED – All rights reserved.

THIS DRAWING IS THE PROPERTY OF MECON AND ISSUED FOR THE SPECIFIC PROJECT MENTIONED THEREIN. THIS IS NOT TO BE COPIED OR USED FOR OTHER PROJECTS UNLESS EXPRESSLY PERMITTED BY MECON.

SECTION	OIL & GAS
LOCATION	DELHI
DESIGNED	UMAR
DRAWN	UMAR
CHECKED AND VERIFIED	AKB
APPROVED	SIG A. GANGAL
DATE	17.04.21

NORTH EAST GAS GRID (PHASE–II P/L SECTION)

TYPICAL ARRANGEMENT FOR AV

SCALE : NTS

DRG. NO. MEC/23UU/05/28/M/002/0016

REV 1

REV / SEC	PIPING	ELEC.	INST.	CONCURRED BY

SECTION–13

SYMBOLS & ABBREVIATIONS

SYMBOLS

- VP–PLUG VALVE
- VB–BALL VALVE WELDED END
- VB–BALL VALVE FLANGED END
- GATE VALVE
- GV–GLOBE VALVE
- PRESSURE RELIEF OR SAFETY VALVE (PSV)
- PRESSURE REGULATING VALVE (PCV) (SELF ACTUATING TYPE)
- NON RETURN VALVE
- CONTROL VALVE WITH SLAM SHUT–OFF VALVE
- SOLENOID VALVE
- GAS ACTUATED ISOLATION VALVE
- GAS ACTUATED ISOLATION VALVE WITH HANDWHEEL
- REDUCER
- FLANGE
- FLAME ARRESTOR (FA)
- RTU — REMOTE TERMINAL UNIT
- DIAPHRAM
- XXLS — PIG SIGNALLER
- VENT
- SPECTACLE BLIND

SYMBOLS

- PD METER
- TURBINE METER
- INSULATION JOINT (IJ)
- FLOW TEE (FWT)
- FIELD MOUNTED INSTRUMENT
- CONTROL PANEL MOUNTED INSTRUMENT
- ULTRASONIC METER
- SCADA INDICATOR, CONTROLLER OR OTHER DEVICES WITH OPERATOR ACCESS TO ADJUSTMENT.

ABBREVIATIONS

AE	ANALYZER SENSOR (GAS CHROMATOGRAPH)
AI	ANALYZER INDICATOR
AT	ANALYZER TRANSMITTER
FY	FLOW COMPUTER
FQI	FLOW TOTALIZER & INDICATOR
LG	LEVEL GAUGE
ZSH/ZSL	LIMIT SWITCHES (OPEN/CLOSE)
TI/TG	TEMPERATURE INDICATOR/ GAUGE
TE	TEMPERATURE ELEMENT
TW	THERMOWELL
DPI/DPG	DIFF. PRESSURE INDICATOR/ GAUGE
DPT	DIFF. PRESSURE TRANSMITTER
PI/PG	PRESSURE INDICATOR/ GAUGE
PT	PRESSURE TRANSMITTER
FC/FO	FAILURE TO CLOSE/OPEN
LO	LOCK OPEN
FIC/PIC	FLOW/PRESS. INDICATING CONTROLLER
I	INTERLOCK
XRL	LOCAL/REMOTE INDICATION
XSL	LOCAL/REMOTE SWITCH
HSH	HAND SWITCH HIGH
HSL	HAND SWITCH LOW
FT	FLOW TRANSMITTER
FE	FLOW ELEMENT
Q.O.E.C.	QUICK OPENING END CLOSURE

ABBREVIATIONS

TT	TEMP TRANSMITTER
FR	FLOW RECORDER
PIR	PRESSURE IND.RECORDER
TIR	TEMP. IND. RECORDER
PSH	PRESSURE SWITCH HIGH
PSL	PRESSURE SWITCH LOW
LSH	LEVEL SWITCH HIGH
LSL	LEVEL SWITCH LOW
LAH	LEVEL ALARM HIGH
LAL	LEVEL ALARM LOW
D	CONDENSATE DRAIN
A1A/B1A	150#/300# RATING
C1A/D1A	400#/600# RATING
LX/PX	PNEUMATIC/ ELECTRIC SIGNAL TRANSMITTER
FB	FULL BORE
SP	SAMPLER
NG	NATURAL GAS
V	VENT
AS	AUTO SAMPLER
CP	CORROSION PROBE
CC	CORROSION COUPON
AV	ACTUATED VALVE
SDV	SHUT DOWN VALVE
LV	LEVEL CONTROL VALVE
PV/PCV	PRESSURE CONTROL VALVE
FCV	FLOW CONTROL VALVE

00”–FLUID–00–00–A1A/B1A/C1A/D1A/D4A

- MATERIAL SPEC.
- LINE NO.
- UNIT NO.
- (P–NATURAL GAS)
- LINE SIZE (NOMINAL)

INDRADHANUSH GAS GRID LIMITED

मेकॉन लिमिटेड

MECON LIMITED

SECTION	OIL & GAS
LOCATION	DELHI
DESIGNED	
DRAWN	SUNIL
CHECKED AND VERIFIED	
APPROVED	SIG
	DATE

NORTH EAST GAS GRID (PHASE–II P/L SECTION)

LEGEND / DRAWING SYMBOLS

SCALE : NTS | SHEET 1 OF 2 | REV 0

DRG. NO. MEC/23UU/05/28/M/000/0001

SECTION–12

REV.NO	DATE	ZONE	DESCRIPTION	BY	VERIFIED
			REVISION		

REFERENCES | DRG.NO.

REV / SEC | INST. | CONCURRED BY

© Copyright MECON LIMITED – All rights reserved.
THIS DRAWING IS THE PROPERTY OF MECON AND ISSUED FOR THE SPECIFIC PROJECT MENTIONED THEREIN. THIS IS NOT TO BE COPIED OR USED FOR OTHER PROJECTS UNLESS EXPRESSLY PERMITTED BY MECON.

DRG. NO. MEC/23UU/05/28/M/000/0001

SYMBOLS & ABBREVIATIONS

SYMBOLS

- SHUT-OFF VALVE, GENERAL
- SAFETY SHUT-OFF VALVE
- CONTINIUOUS-ACTION VALVE
- RIGHT-ANGLE SHUT-OFF VALVE, GENERAL
- THREE-WAY VALVE, GENERAL
- FOUR-WAY VALVE, GENERAL
- NEEDLE VALVE
- PUSHBUTTON VALVE
- CHECK VALVE (SPRING TYPE)
- NON RETURN VALVE (SWING TYPE)
- BUTTERFLY VALVE
- CONTINUOUSLY VARIABLE BORE BUTTERFLY VALVE
- LOUVRE
- SEPERATOR GENERAL
- 2 STAGE SEPERATOR
- CYCLONE SEPERATOR
- CONDENSATE TRAP
- FLOWMETER GENERAL
- METER GENERAL
- TURBINE METER
- VORTEX-SHEDDING FLOWMETER
- DIAPHRAGM METER
- MANUALLY OPERATED ACTUATOR, GENERAL
- DIAPHRAGM ACTUATOR
- PISTON ACTUATOR
- ELECTROMAGNETIC ACTUATOR
- HYDRAULIC OR PNEUMATIC ACTUATOR, GENERAL

SYMBOLS

- SPRING-OPERATED ACTUATOR
- AUTOMATICALLY OPERATED ACTUATOR, GENERAL
- ELECTRIC MOTOR-OPERATED ACTUATOR, GENERAL
- VALVE CLOSED ON FAILURE OF ACTUATING ENERGY
- VALVE OPENED ON FAILURE OF ACTUATING ENERGY
- VALVE RETAINS POSITION ON FAILURE OF ACTUATING ENERGY
- TURBINE, GENERAL
- COMPRESSOR, GENERAL
- ROTARY PISTON COMPRESSOR
- PISTON COMPRESSOR
- JET BOOSTER
- FAN, GENERAL
- HEAT EXCHANGER WITHOUT COUNTERFLOW
- COUNTERFLOW HEAT EXCHANGER
- PLATE HEAT EXCHANGER
- FINNED HEAT EXCHANGER WITH VENTILATOR
- BLIND PLATE
- "FIGURE 8" PLATE, BLIND PLATE IN FUNCTION
- "FIGURE 8" PLATE, GOGGLE PLATE IN FUNCTION
- ORIFICE PLATE
- INSULATING FLANGE
- INSULATING COUPLING
- STRAIGHTENING VANES
- RUPTURE DISK
- SIGHT GLASS. GENRAL
- EXPANSION JOINT
- SILENCER
- PULSATION DAMPENER
- MIXING NOZZLE
- CAP
- FLANGE CONNECTION

SYMBOLS

- FILTER, GENERAL
- GAS FILTER, GENERAL
- CARTRIDGE FILTER
- GAS SORPTION FILTER
- LIQUID FILTER, GENERAL
- "Y" TYPE STRAINER
- PRESSURE REDUCING VALVE, IN AUXILIARY AND CONTRAL FACILITIES
- PRESSURE CONTROL VALVE, GENERAL
- PROCESS PRIMARY LINE
- PROCESS SECONDARY LINE
- ELECTRIC LINE
- PNEUMATIC LINE
- CAPILLARY LINE
- INSTRUMENT LINE
- HEAT TRACING LINE
- JACKETED LINE
- JACKETED & HEATED LINE
- VENT STACK
- SCRAPPER TRAP
- LIQUID PUMP GENERAL
- CENTRIFUGAL PUMP
- LIQUID RING PUMP
- PISTON PUMP
- DIAPHRAGM PUMP
- CP — CORROSION PROBE
- CC — CORROSION COUPON

ABBREVIATIONS

ESD	EMERGRNCY SHUT-DOWN
EW	DRAIN
GCV	GAS-OPERATED CONTROL VALVE
GOV	GAS-OVER OIL OPERATED VALVE
HOV	HYDRAULIC-OPERATED VALVE
LC	LOCKED CLOSED
LO	LOCKED OPEN
LP	LOCKED POSITION
LPT	LOW POINT
MCV	MOTOR CONTROL VALVE
MH	MANHOLE
MOV	MOTOR-OPERATED VALVE
SV	SOLENOID VALVE
PCV	PRESSURE CONTROL VALVE
SAV SSV	SAFETY SHUT-OFF VALVE
SBV PRV	PRESSURE RELIFE VALVE
SP	SETPOINT
TE	THERMOCOUPLE
TW	THERMOWELL
NRV	NON-RETURN VALVE
CV	CHECK VALVE
FCV	FLOW CONTROL VALVE
PGS	POWER GAS SUPPLY
IAS	INTRUMENT AIR SUPPLY
NC	NORMAL CLOSED
NO	NORMAL OPEN

INDRADHANUSH GAS GRID LIMITED

मेकॉन लिमिटेड

MECON LIMITED

SECTION	OIL & GAS
LOCATION	DELHI
DESIGNED	
DRAWN	SUNIL
CHECKED AND VERIFIED	
APPROVED	SIG
	DATE

NORTH EAST GAS GRID (PHASE-II P/L SECTION)

LEGEND / DRAWING SYMBOLS

SCALE : NTS | SHEET 2 OF 2 | REV 0

DRG. NO. MEC/23UU/05/28/M/000/0001

REFERENCES | DRG.NO.

© Copyright MECON LIMITED - All rights reserved.
THIS DRAWING IS THE PROPERTY OF MECON AND ISSUED FOR THE SPECIFIC PROJECT MENTIONED THEREIN. THIS IS NOT TO BE COPIED OR USED FOR OTHER PROJECTS UNLESS EXPRESSLY PERMITTED BY MECON.

REV.NO	DATE	ZONE	DESCRIPTION	BY	VERIFIED
			REVISION		

SECTION-12

REV / SEC | INST. | CONCURRED BY

DRG. NO. MEC/23UU/05/28/M/002/0015

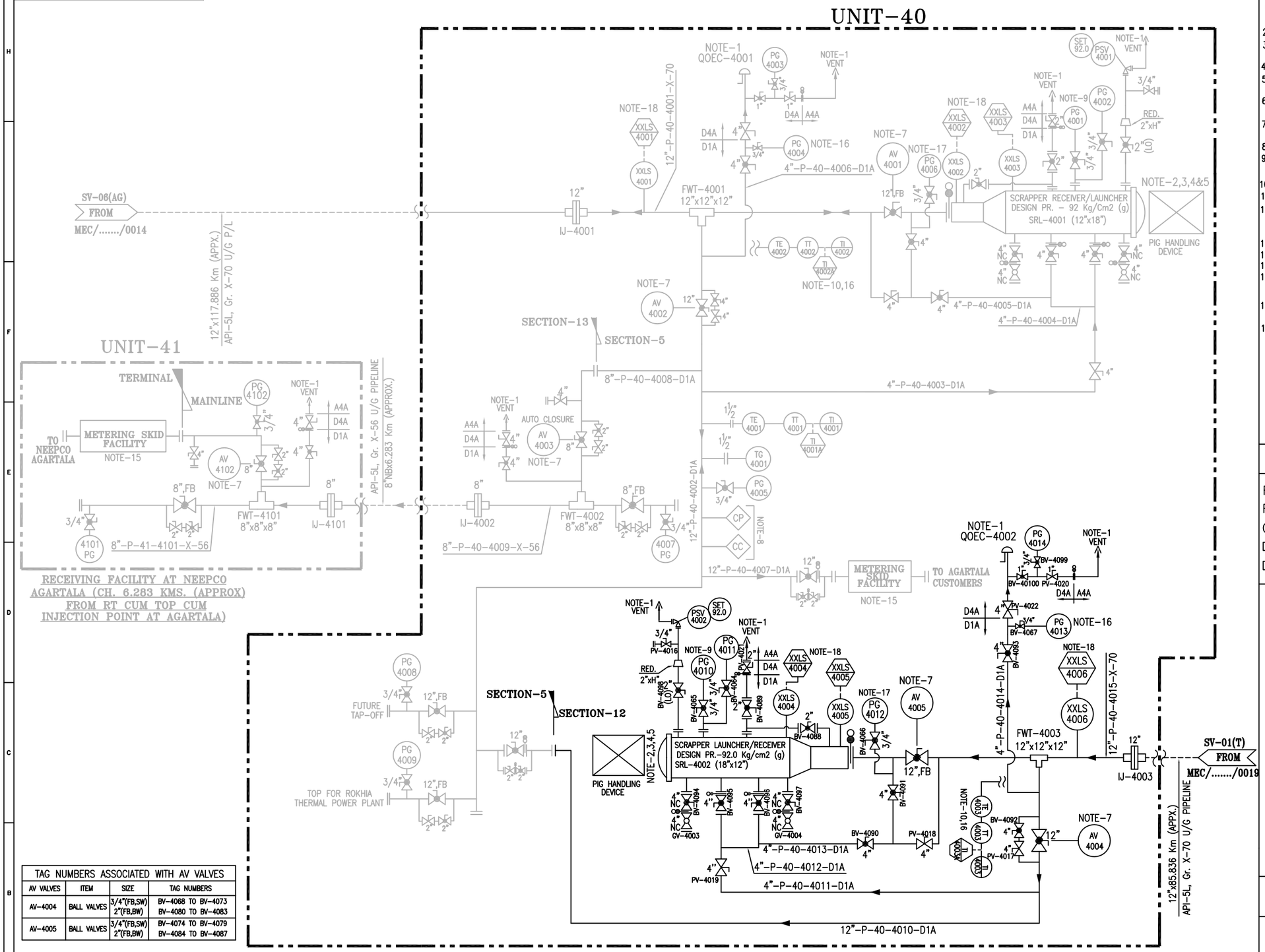

TAG NUMBERS ASSOCIATED WITH AV VALVES			
AV VALVES	ITEM	SIZE	TAG NUMBERS
AV-4004	BALL VALVES	3/4"(FB,SW) 2"(FB,BW)	BV-4068 TO BV-4073 BV-4080 TO BV-4083
AV-4005	BALL VALVES	3/4"(FB,SW) 2"(FB,BW)	BV-4074 TO BV-4079 BV-4084 TO BV-4087

RECEIVING TERMINAL CUM TAP-OFF CUM INJECTION POINT CUM IPS AT AGARTALA
(CH. 117.886 Km (APPROX) FROM PANISAGAR)
(CH. ~0 KMS. FROM RT CUM TAP-OFF CUM INJECTION POINT CUM IPS AT AGARTALA)

NOTES:

1. ALL VENTS SHALL BE LOCATED MIN. HEIGHT OF 3 MTR. ABOVE THE HIGHEST OPERATING LEVEL.
2. SCRAPPER LAUNCHER/RECEIVER SHALL HAVE SCRAPPER HANDLING FACILITY.
3. SCRAPPER LAUNCHER/RECEIVER SHALL BE SUITABLE FOR HANDLING INTELLIGENT PIGS.
4. SCRAPPER LAUNCHER/RECEIVER SHALL HAVE QUICK OPPENING CLOSURE.
5. SCRAPPER DOOR MECHANISM TO BE CONSTRUCTED SUCH THAT THE DOOR CAN NOT BE OPENED UNLESS SCRAPPER TRAP IS FULLY DEPRESSURISED.
6. GAS DETECTORS TO BE PROVIDED NEAR FILTERS, FLOW METERS & SCRAPPER TRAPS. SIGNAL FROM GAS DETECTOR TO BE TAKEN IN CONTROL ROOM.
7. FOR SV, HOV & AV DETAIL REFER DRG. NO. MEC/23UU/05/28/M/002/0016, /0018.
8. NOTE DELETED.
9. PG-4010 SHALL HAVE A RANGE OF 0-1 KG/CM2(g) WITH A GAUGE SAVER.
10. DIRECT SURFACE CONTACT TYPE.
11. ALL BALL VALVES WITH BUTT WELDED END SHALL HAVE FULLY WELDED BODY.
12. ALL HIGHEST POINT & LOWEST POINT OF THE STATION PIPING SHALL BE PROVIDED WITH VENT & DRAIN FACILITY & SAME SHALL BE TAKEN CARE DURING PREPARATION OF GAD.
13. NOTE DELETED.
14. SUPPORT SHALL BE PROVIDED BEFORE & AFTER MAINLINE IJ.
15. NOTE DELETED.
16. DEPRESSURIZATION VALVE SHALL BE LOCATED IN SUCH A WAY THAT PG-4013 & TI-4003 CAN BE READ DURING VENTING. 1" VALVE ON VENT LINE OF THE QOEC LINE SHALL BE APPROCHABLE FOR OPERATION.
17. PG-4012 SHALL HAVE A RANGE OF 0-5 KG/CM2(G) WITH A GAUGE SAVER & LEAST COUNT OF 0.1 KG/CM2(G).
18. ALL PIG SIGNALLER SHALL BE OF NON-INTRUSIVE TYPE.

PROCESS DATA

FLUID: NATURAL GAS(DRY)/RLNG
FLOW: - MMSCMD (APPX.)
OPER. PRESS.: - KG/CM2(G)
DESIGN PRESS.: 92 KG/CM2(G)
DESIGN CLASS: 600#

TEMPERATURE
WORKING : 0°-55° C
DESIGN : -29 TO 65°C

LINE LEGEND

PROPOSED LINE A/G
PROPOSED LINE U/G
LINE A/G (OTHER'S SCOPE)
LINE U/G (OTHER'S SCOPE)

12"-P-40-4010-D1A
MATERIAL SPEC.
LINE NO.
UNIT NO.
PROCESS FLUID (NG/RLNG)
LINE SIZE (NOMINAL)

VALVE LEGEND

BALL VALVE FLANGE END
BALL VALVE BW END/UPTO 1 1/2" SW END.
PLUG VALVE BW END/UPTO 1 1/2" SW END.
PLUG VALVE FLANGE END
GLOBE VALVE.

INDRADHANUSH GAS GRID LIMITED

मेकॉन लिमिटेड

MECON LIMITED

REV	DATE	ZONE	DESCRIPTION	BY	VERIFIED
3	18.12.20		GENERAL REVISION	UMAR	AKB
2	26.08.19		AS PER REVISED SCHEMATIC/ GENERAL REVISION	UMAR	AKB
1	18.03.20		AS PER REVISED SCHEMATIC/ GENERAL REVISION	RASHMI	AKB
0	26.08.19		AS PER REVISED SCHEMATIC/ GENERAL REVISION	UMAR	AKB
A	20.06.19		FOR COMMENT PURPOSE	UMAR	AKB

REFERENCES	DRG.NO.
PIPELINE SCHEMATIC ROUTE DIAGRAM	MEC/23UU/05/28/M/000/0021 , REV - 2, SHEET 12 OF 14

© Copyright MECON LIMITED - All rights reserved.
THIS DRAWING IS THE PROPERTY OF MECON AND ISSUED FOR THE SPECIFIC PROJECT MENTIONED THEREIN. THIS IS NOT TO BE COPIED OR USED FOR OTHER PROJECTS UNLESS EXPRESSLY PERMITTED BY MECON.

SECTION	OIL & GAS
LOCATION	DELHI
DESIGNED	UMAR
DRAWN	UMAR
CHECKED AND VERIFIED	AKB
APPROVED	SIG A. GANGAL
DATE	18.12.20

NORTH EAST GAS GRID (PHASE-II P/L SECTION)

P&ID FOR RECEIVING FACILITY FOR 12"x85.836 KMS. P/L FROM TULUMURU AT AGARTALA

SCALE : NTS

DRG. NO. MEC/23UU/05/28/M/002/0015

REV 3

REV / SEC	PIPING	ELEC.	INST.	CONCURRED BY

SECTION-12

DRG. NO. MEC/23UU/05/28/M/002/0019

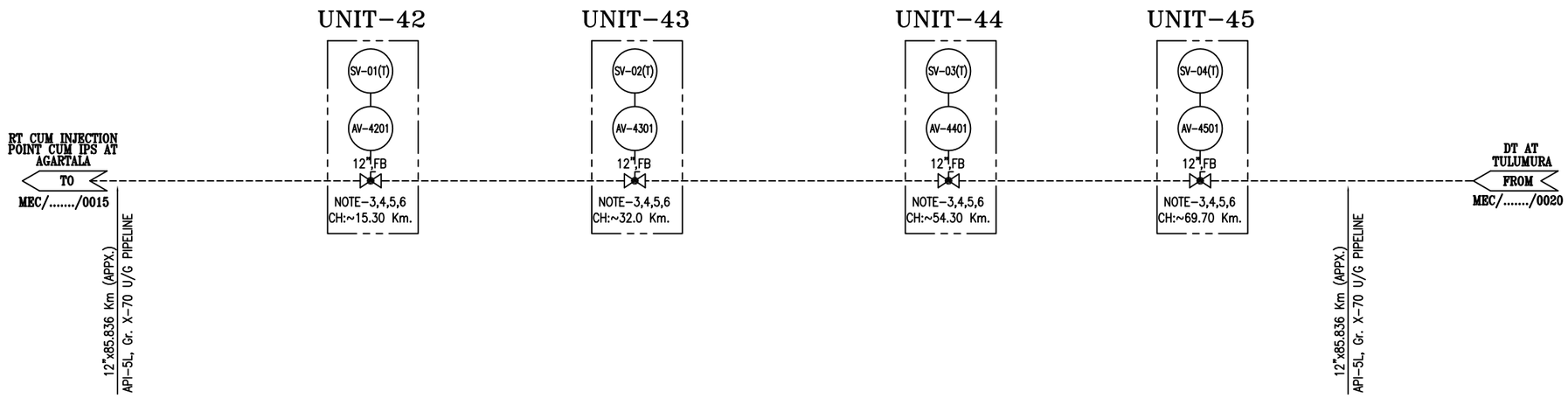

NOTES:

1. ALL VENTS SHALL BE LOCATED MIN. HEIGHT OF 3 MTR. ABOVE THE HIGHEST OPERATING LEVEL.
2. NOTE DELETED.
3. ALL SV ARE EXTENDED STEM, BUTT WELDED END WITH FULLY WELDED BODY & FULL BORE BALL VALVE.
4. BURRIED VALVE SHALL BE PROVIDED WITH CORROSION PROTECTION COATING.
5. FOR SV, HOV & AV DETAIL REFER DRG. NO. MEC/23UU/05/28/M/002/0016, /0018.
6. LOCATION OF SV STATIONS AND THEIR CHAINAGES ARE AS PER PIPELINE SCHEMATIC ROUTE DIAGRAM. HOWEVER LOCATIONS OF SV MAY GET SLIGHTLY CHANGED AS PER AVAILABILITY OF PLOT TO M/s IGGL.
7. ALL BALL VALVES WITH BUTT WELDED END SHALL HAVE FULLY WELDED BODY.
8. ALL HIGHEST POINT & LOWEST POINT OF THE STATION PIPING SHALL BE PROVIDED WITH VENT & DRAIN FACILITY & SAME SHALL BE TAKEN CARE DURING PREPARATION OF GAD.
9. SUPPORT SHALL BE PROVIDED BEFORE & AFTER MAINLINE IJ.

PROCESS DATA

FLUID: NATURAL GAS(DRY)/RLNG	TEMPERATURE
FLOW: – MMSCMD (APPX.)	WORKING : 0°–55° C
OPER. PRESS.: – KG/CM2(G)	DESIGN : –29 TO 65°C
DESIGN PRESS.: 92 KG/CM2(G)	
DESIGN CLASS: 600#	

LINE LEGEND

——— PROPOSED LINE A/G
------ PROPOSED LINE U/G

12"–P–01–0101–D1A

- MATERIAL SPEC.
- LINE NO.
- UNIT NO.
- PROCESS FLUID (NG/RLNG)
- LINE SIZE (NOMINAL)

VALVE LEGEND

- BALL VALVE FLANGE END
- BALL VALVE BW END/UPTO 1½" SW END.
- PLUG VALVE BW END/UPTO 1½" SW END.
- PLUG VALVE FLANGE END
- GLOBE VALVE.

TAG NOS. FOR SV–01(T) (UNIT–42)

ITEM	SIZE	TAG NUMBERS
FLOW TEE	12"X12"X8"	FWT–4201
FLOW TEE	12"X12"X6"	FWT–4202 & FWT–4203
IJ	8"	IJ–4201
IJ	4"	IJ–4202
BALL VALVE	3/4"(FB,SW)	BV–4201 TO BV–4208
BALL VALVE	2"(FB,BW)	BV–4209 TO BV–4213
BALL VALVE	4"(RB,BW)	BV–4214
BALL VALVE	4"(RB,BW,ES)	BV–4215 TO BV–4216
BALL VALVE	8"(FB,BW)	BV–4217
BALL VALVE	3/4"(FB,SW) LTCS	BV–4218
BALL VALVE	1"(FB,SW) LTCS	BV–4219
PLUG VALVE	2"(BW)	PV–4201
PLUG VALVE	4"(BW,ES)	PV–4202
PLUG VALVE	1"(SW) LTCS	PV–4203
PLUG VALVE	4"(BW) LTCS	PV–4204
QOEC	4" LTCS	QOEC–4201

TAG NOS. FOR SV–02(T) (UNIT–43)

ITEM	SIZE	TAG NUMBERS
FLOW TEE	12"X12"X8"	FWT–4301
FLOW TEE	12"X12"X6"	FWT–4302 & FWT–4303
IJ	8"	IJ–4301
IJ	4"	IJ–4302
BALL VALVE	3/4"(FB,SW)	BV–4301 TO BV–4308
BALL VALVE	2"(FB,BW)	BV–4309 TO BV–4313
BALL VALVE	4"(RB,BW)	BV–4314
BALL VALVE	4"(RB,BW,ES)	BV–4315 TO BV–4316
BALL VALVE	8"(FB,BW)	BV–4317
BALL VALVE	3/4"(FB,SW) LTCS	BV–4318
BALL VALVE	1"(FB,SW) LTCS	BV–4319
PLUG VALVE	2"(BW)	PV–4301
PLUG VALVE	4"(BW,ES)	PV–4302
PLUG VALVE	1"(SW) LTCS	PV–4303
PLUG VALVE	4"(BW) LTCS	PV–4304
QOEC	4" LTCS	QOEC–4301

TAG NOS. FOR SV–03(T) (UNIT–44)

ITEM	SIZE	TAG NUMBERS
FLOW TEE	12"X12"X8"	FWT–4401
FLOW TEE	12"X12"X6"	FWT–4402 & FWT–4403
IJ	8"	IJ–4401
IJ	4"	IJ–4402
BALL VALVE	3/4"(FB,SW)	BV–4401 TO BV–4408
BALL VALVE	2"(FB,BW)	BV–4409 TO BV–4413
BALL VALVE	4"(RB,BW)	BV–4414
BALL VALVE	4"(RB,BW,ES)	BV–4415 TO BV–4416
BALL VALVE	8"(FB,BW)	BV–4417
BALL VALVE	3/4"(FB,SW) LTCS	BV–4418
BALL VALVE	1"(FB,SW) LTCS	BV–4419
PLUG VALVE	2"(BW)	PV–4401
PLUG VALVE	4"(BW,ES)	PV–4402
PLUG VALVE	1"(SW) LTCS	PV–4403
PLUG VALVE	4"(BW) LTCS	PV–4404
QOEC	4" LTCS	QOEC–4401

TAG NOS. FOR SV–04(T) (UNIT–45)

ITEM	SIZE	TAG NUMBERS
FLOW TEE	12"X12"X8"	FWT–4501
FLOW TEE	12"X12"X6"	FWT–4502 & FWT–4503
IJ	8"	IJ–4501
IJ	4"	IJ–4502
BALL VALVE	3/4"(FB,SW)	BV–4501 TO BV–4508
BALL VALVE	2"(FB,BW)	BV–4509 TO BV–4513
BALL VALVE	4"(RB,BW)	BV–4514
BALL VALVE	4"(RB,BW,ES)	BV–4515 TO BV–4516
BALL VALVE	8"(FB,BW)	BV–4517
BALL VALVE	3/4"(FB,SW) LTCS	BV–4518
BALL VALVE	1"(FB,SW) LTCS	BV–4519
PLUG VALVE	2"(BW)	PV–4501
PLUG VALVE	4"(BW,ES)	PV–4502
PLUG VALVE	1"(SW) LTCS	PV–4503
PLUG VALVE	4"(BW) LTCS	PV–4504
QOEC	4" LTCS	QOEC–4501

INDRADHANUSH GAS GRID LIMITED

मेकॉन लिमिटेड

MECON LIMITED

REV																							
	PIPING																						
	ELEC.																						
REV / SEC	INST.																						
	CONCURRED BY																						

SECTION–12

REV.NO	DATE	ZONE	DESCRIPTION	BY	VERIFIED
			REVISION		

REFERENCES	DRG.NO.
PIPELINE SCHEMATIC ROUTE DIAGRAM	MEC/23UU/05/28/M/000/0021 , REV – 2, SHEET 12 OF 14

© Copyright MECON LIMITED – All rights reserved.
THIS DRAWING IS THE PROPERTY OF MECON AND ISSUED FOR THE SPECIFIC PROJECT MENTIONED THEREIN. THIS IS NOT TO BE COPIED OR USED FOR OTHER PROJECTS UNLESS EXPRESSLY PERMITTED BY MECON.

SECTION	OIL & GAS	NORTH EAST GAS GRID (PHASE–II P/L SECTION)
LOCATION	DELHI	
DESIGNED	UMAR	
DRAWN	UMAR	P & ID FOR SV STATIONS ALONG 12"NB x 85.836 KMS. (APPX.) P/L FROM TULUMURA
CHECKED AND VERIFIED	AKB	
APPROVED	SIG A. GANGAL	SCALE : NTS — REV
	DATE 18.12.20	DRG. NO. MEC/23UU/05/28/M/002/0019 — 0

DRG. NO. MEC/23UU/05/28/M/002/0020

UNIT-46

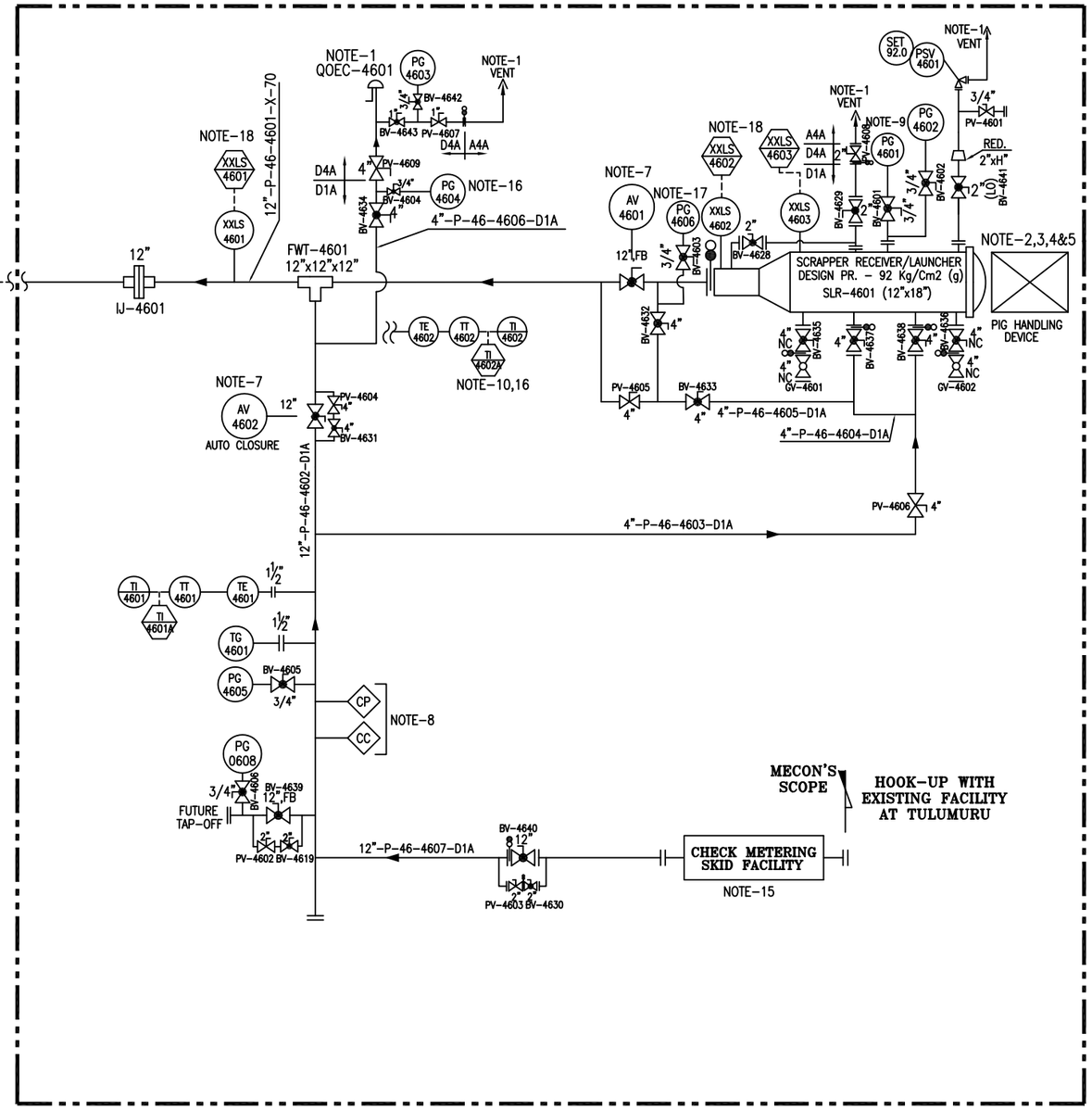

DISPATCH TERMINAL AT TULUMURA

(CH. ~85.836 KMS. FROM RT CUM TAP-OFF CUM INJECTION POINT CUM IPS AT AGARTALA)

TAG NUMBERS ASSOCIATED WITH AV VALVES			
AV VALVES	ITEM	SIZE	TAG NUMBERS
AV-4601	BALL VALVES	3/4"(FB,SW) 2"(FB,BW)	BV-4607 TO BV-4612 BV-4620 TO BV-4623
AV-4602	BALL VALVES	3/4"(FB,SW) 2"(FB,BW)	BV-4613 TO BV-4618 BV-4624 TO BV-4627

NOTES:

1. ALL VENTS SHALL BE LOCATED MIN. HEIGHT OF 3 MTR. ABOVE THE HIGHEST OPERATING LEVEL.
2. SCRAPPER LAUNCHER/RECEIVER SHALL HAVE SCRAPPER HANDLING FACILITY.
3. SCRAPPER LAUNCHER/RECEIVER SHALL BE SUITABLE FOR HANDLING INTELLIGENT PIGS.
4. SCRAPPER LAUNCHER/RECEIVER SHALL HAVE QUICK OPPENING CLOSURE.
5. SCRAPPER DOOR MECHANISM TO BE CONSTRUCTED SUCH THAT THE DOOR CAN NOT BE OPENED UNLESS SCRAPPER TRAP IS FULLY DEPRESSURISED.
6. GAS DETECTORS TO BE PROVIDED NEAR FILTERS, FLOW METERS & SCRAPPER TRAPS. SIGNAL FROM GAS DETECTOR TO BE TAKEN IN CONTROL ROOM.
7. FOR SV, HOV & AV DETAIL REFER DRG. NO. MEC/23UU/05/28/M/002/0016 & 0018.
8. ONLINE RETRIVEL TYPE CORROSION MONITORING COUPON AND CORROSION PROBE SHALL BE PROVIDED. FURTHER WHEREVER SCADA SYSTEM ARE AVAILABLE, THIS SYSTEM SHALL BE ONLINE SCADA COMPATIBLE OTHERWISE DATA SHALL BE COLLECTED BY OFFLINE DATA LOGGER.
9. PG-4601 SHALL HAVE A RANGE OF 0-1 KG/CM2(g) WITH A GAUGE SAVER.
10. DIRECT SURFACE CONTACT TYPE.
11. ALL BALL VALVES WITH BUTT WELDED END SHALL HAVE FULLY WELDED BODY.
12. ALL HIGHEST POINT & LOWEST POINT OF THE STATION PIPING SHALL BE PROVIDED WITH VENT & DRAIN FACILITY & SAME SHALL BE TAKEN CARE DURING PREPARATION OF GAD.
13. NOTE DELETED.
14. SUPPORT SHALL BE PROVIDED BEFORE & AFTER MAINLINE IJ.
15. CHECK METERING SKID P&ID SHALL BE PROVIDED SEPARATELY.
16. DEPRESSURIZATION VALVE SHALL BE LOCATED IN SUCH A WAY THAT PG-4604 & TI-4602 CAN BE READ DURING VENTING. 1" VALVE ON VENT LINE OF THE QOEC LINE SHALL BE APPROCHABLE FOR OPERATION.
17. PG-4606 SHALL HAVE A RANGE OF 0-5 KG/CM2(G) WITH A GAUGE SAVER & LEAST COUNT OF 0.1 KG/CM2(G).
18. ALL PIG SIGNALLER SHALL BE OF NON-INTRUSIVE TYPE.

PROCESS DATA

FLUID: NATURAL GAS(DRY)/RLNG
FLOW: - MMSCMD (APPX.)
OPER. PRESS.: - KG/CM2(G)
DESIGN PRESS.: 92 KG/CM2(G)
DESIGN CLASS: 600#

TEMPERATURE
WORKING : 0°-55° C
DESIGN : -29 TO 65°C

LINE LEGEND

PROPOSED LINE A/G
PROPOSED LINE U/G

12"-P-46-4601-D1A
- MATERIAL SPEC.
- LINE NO.
- UNIT NO.
- PROCESS FLUID (NG/RLNG)
- LINE SIZE (NOMINAL)

VALVE LEGEND

BALL VALVE FLANGE END
BALL VALVE BW END/UPTO 1½" SW END.
PLUG VALVE BW END/UPTO 1½" SW END.
PLUG VALVE FLANGE END
GLOBE VALVE.

INDRADHANUSH GAS GRID LIMITED

मेकॉन लिमिटेड

MECON LIMITED

	PIPING				
	ELEC.				
REV / SEC	INST.				
	CONCURRED BY				

SECTION-12

REV.NO	DATE	ZONE	DESCRIPTION	BY	VERIFIED

REFERENCES	DRG.NO.
PIPELINE SCHEMATIC ROUTE DIAGRAM	MEC/23UU/05/28/M/000/0021 , REV - 2, SHEET 12 OF 14

© Copyright MECON LIMITED - All rights reserved.
THIS DRAWING IS THE PROPERTY OF MECON AND ISSUED FOR THE SPECIFIC PROJECT MENTIONED THEREIN. THIS IS NOT TO BE COPIED OR USED FOR OTHER PROJECTS UNLESS EXPRESSLY PERMITTED BY MECON.

SECTION	OIL & GAS
LOCATION	DELHI
DESIGNED	UMAR
DRAWN	UMAR
CHECKED AND VERIFIED	AKB
APPROVED	SIG A. GANGAL
	DATE 18.12.20

NORTH EAST GAS GRID (PHASE-II P/L SECTION)

P&ID FOR DISPATCH TERMINAL AT TULUMURU

SCALE : NTS

DRG. NO. MEC/23UU/05/28/M/002/0020

REV 0

DRG. NO. MEC/23UU/05/28/M/002/0016

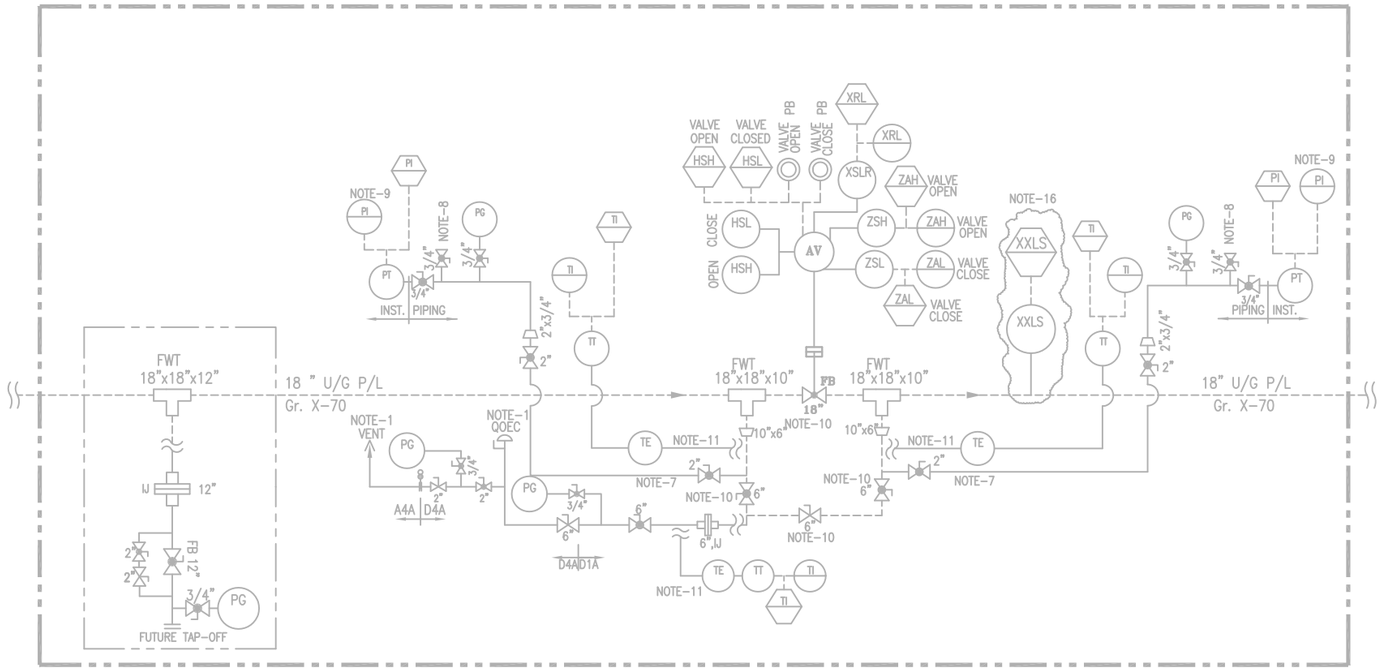

TYPICAL ARRANGEMENT FOR 18" SV (REMOTE OPERATED)

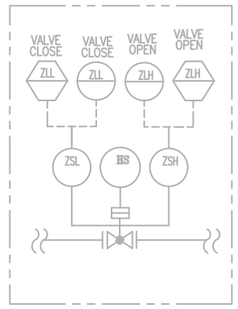

TYPICAL HOV ARRANGEMENT

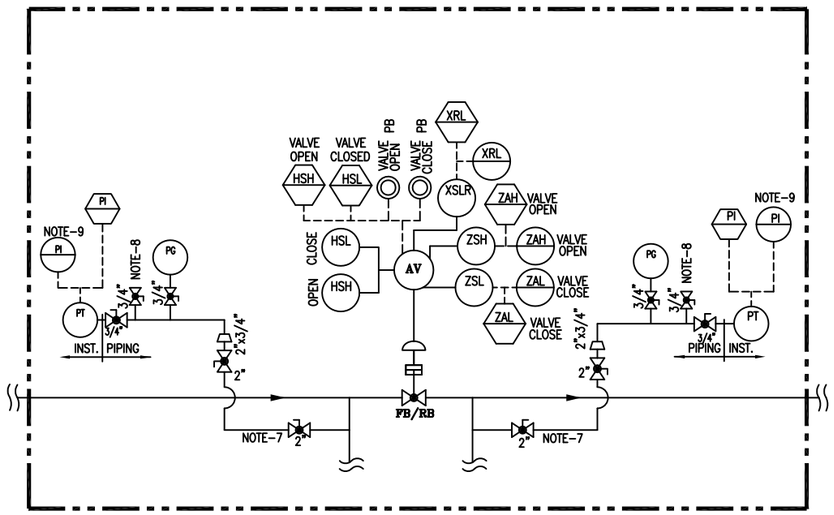

TYPICAL ARRANGEMENT FOR AV

NOTE:-

1. NOTE DELETED.
2. NOTE DELETED.
3. ALL AV (ACTUATED VALVES) SHALL BE FAILED TO STAY PUT TYPE VALVE.
4. NOTE DELETED.
5. NOTE DELETED.
6. NOTE DELETED.
7. ALL PG, PT CONNECTION SHALL BE TAKEN FROM 2" TWO ISOLATION VALVES AND THEN AFTER IT SHOULD BE CONVERTED TO REQUIRE NPT CONNECTION.
8. GAS TAPPING FOR VALVE ACTUATOR.
9. FOR PG & PT DETAIL REFER MECON STANDARD DRG.
10. NOTE DELETED.
11. NOTE DELETED.
12. ALL BALL VALVES WITH BUTT WELDED END SHALL HAVE FULLY WELDED BODY.
13. ALL HIGHEST POINT & LOWEST POINT OF THE STATION PIPING SHALL BE PROVIDED WITH VENT & DRAIN FACILITY & SAME SHALL BE TAKEN CARE DURING PREPARATION OF GAD.
14. NOTE DELETED.
15. NOTE DELETED.
16. NOTE DELETED.

LINE LEGEND

- PROPOSED LINE A/G
- PROPOSED LINE U/G
- LINE A/G (OTHER'S SCOPE)
- LINE U/G (OTHER'S SCOPE)

VALVE LEGEND

- BALL VALVE FLANGE END
- BALL VALVE BW END/UPTO 1½" SW END.
- PLUG VALVE BW END/UPTO 1½" SW END.
- PLUG VALVE FLANGE END
- GLOBE VALVE.

INDRADHANUSH GAS GRID LIMITED

मेकॉन लिमिटेड

MECON LIMITED

REV	DATE	ZONE	DESCRIPTION	BY	VERIFIED
1	18.12.20		GENERAL REVISION	UMAR	AKB
0	26.08.19		AS PER REVISED SCHEMATIC/ GENERAL REVISION	UMAR	AKB
A	20.06.19		FOR COMMENT PURPOSE	UMAR	AKB

REVISION

PIPELINE SCHEMATIC ROUTE DIAGRAM	MEC/23UU/05/28/M/000/0021 , REV – 2, SHEET 12 OF 14
REFERENCES	DRG.NO.

© Copyright MECON LIMITED – All rights reserved.
THIS DRAWING IS THE PROPERTY OF MECON AND ISSUED FOR THE SPECIFIC PROJECT MENTIONED THEREIN. THIS IS NOT TO BE COPIED OR USED FOR OTHER PROJECTS UNLESS EXPRESSLY PERMITTED BY MECON.

SECTION	OIL & GAS
LOCATION	DELHI
DESIGNED	UMAR
DRAWN	UMAR
CHECKED AND VERIFIED	AKB
APPROVED	SIG A. GANGAL
DATE	18.12.20

NORTH EAST GAS GRID (PHASE-II P/L SECTION)

TYPICAL ARRANGEMENT FOR AV

SCALE : NTS

DRG. NO. MEC/23UU/05/28/M/002/0016

REV 1

REV / SEC	PIPING	ELEC.	INST.	CONCURRED BY

SECTION-12

DRG. NO. MEC/23UU/05/28/M/002/0018

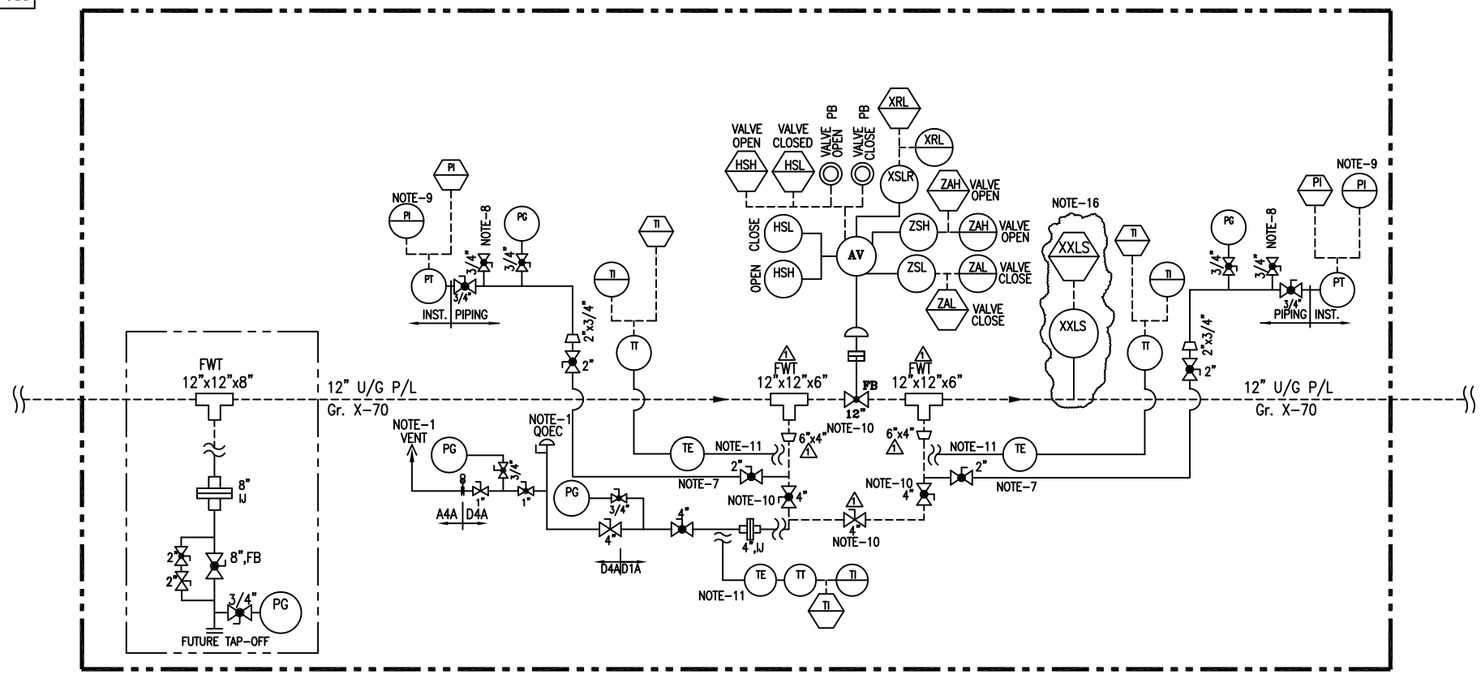

TYPICAL ARRANGEMENT FOR 12" SV (REMOTE OPERATED)

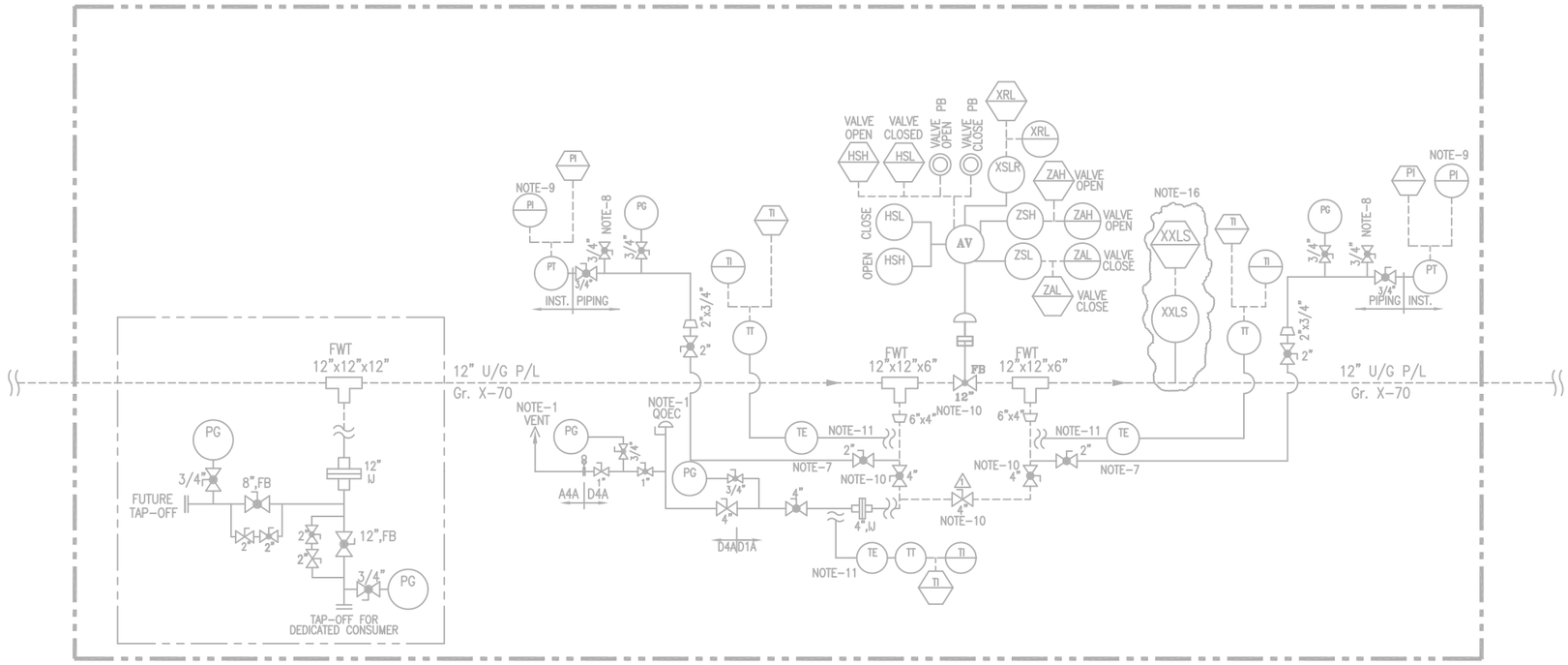

TYPICAL ARRANGEMENT FOR 12" SV WITH AN ADDITIONAL TAP-OFF POINT FOR DEDICATED CONSUMER (REMOTE OPERATED)

NOTE:-

1. ALL VENT SHALL BE LOCATED MIN. HEIGHT OF 3 MTR. ABOVE THE HIGHEST OPERATING LEVEL.
2. NOTE DELETED.
3. ALL AV (ACTUATED VALVES) SHALL BE FAILED TO STAY PUT TYPE VALVE.
4. NOTE DELETED.
5. NOTE DELETED.
6. NOTE DELETED.
7. ALL PG, PT CONNECTION SHALL BE TAKEN FROM 2" TWO ISOLATION VALVES AND THEN AFTER IT SHOULD BE CONVERTED TO REQUIRE NPT CONNECTION.
8. GAS TAPPING FOR VALVE ACTUATOR.
9. FOR PG & PT DETAIL REFER MECON STANDARD DRG.
10. EXTENDED STEM VALVE.
11. DIRECT SURFACE CONTACT TYPE.
12. ALL BALL VALVES WITH BUTT WELDED END SHALL HAVE FULLY WELDED BODY.
13. ALL HIGHEST POINT & LOWEST POINT OF THE STATION PIPING SHALL BE PROVIDED WITH VENT & DRAIN FACILITY & SAME SHALL BE TAKEN CARE DURING PREPARATION OF GAD.
14. NOTE DELETED.
15. SUPPORT SHALL BE PROVIDED BEFORE & AFTER MAINLINE IJ.
16. NON-INTRUSIVE TYPE PIG SIGNALLER TO BE INSTALLED AT FIRST & LAST SV STATION BEFORE EACH INTERMEDIATE PIGGING STATION/RECEIVING STATION.

LINE LEGEND

- PROPOSED LINE A/G
- PROPOSED LINE U/G
- LINE A/G (OTHER'S SCOPE)
- LINE U/G (OTHER'S SCOPE)

VALVE LEGEND

- BALL VALVE FLANGE END
- BALL VALVE BW END/UPTO 1½" SW END.
- PLUG VALVE BW END/UPTO 1½" SW END.
- PLUG VALVE FLANGE END
- GLOBE VALVE.

INDRADHANUSH GAS GRID LIMITED

मेकॉन लिमिटेड

MECON LIMITED

REV.NO	DATE	ZONE	DESCRIPTION	BY	VERIFIED
1	18.12.20		AS PER REQUIREMENT	UMAR	AKB
0	26.08.19		AS PER REVISED SCHEMATIC/ GENERAL REVISION	UMAR	AKB
A	20.06.19		FOR COMMENT PURPOSE	UMAR	AKB

REVISION

REFERENCES	DRG.NO.
PIPELINE SCHEMATIC ROUTE DIAGRAM	MEC/23UU/05/28/M/000/0021 , REV – 2, SHEET 12 OF 14

© Copyright MECON LIMITED – All rights reserved.
THIS DRAWING IS THE PROPERTY OF MECON AND ISSUED FOR THE SPECIFIC PROJECT MENTIONED THEREIN. THIS IS NOT TO BE COPIED OR USED FOR OTHER PROJECTS UNLESS EXPRESSLY PERMITTED BY MECON.

SECTION	OIL & GAS
LOCATION	DELHI
DESIGNED	UMAR
DRAWN	UMAR
CHECKED AND VERIFIED	AKB
APPROVED	SIG A. GANGAL
DATE	18.12.20

NORTH EAST GAS GRID (PHASE-II P/L SECTION)

TYPICAL ARRANGEMENT FOR 12" SV (REMOTE OPERATED) STATION

SCALE : NTS

DRG. NO. MEC/23UU/05/28/M/002/0018

REV 1

REV / SEC	
PIPING	
ELEC.	
INST.	
CONCURRED BY	

SECTION-12

DRG. NO. MEC/23UU/05/28/M/000/0001

SYMBOLS & ABBREVIATIONS

SYMBOLS

- VP–PLUG VALVE
- VB–BALL VALVE WELDED END
- VB–BALL VALVE FLANGED END
- GATE VALVE
- GV–GLOBE VALVE
- PRESSURE RELIEF OR SAFETY VALVE (PSV)
- PRESSURE REGULATING VALVE (PCV) (SELF ACTUATING TYPE)
- NON RETURN VALVE
- CONTROL VALVE WITH SLAM SHUT–OFF VALVE
- SOLENOID VALVE
- GAS ACTUATED ISOLATION VALVE
- GAS ACTUATED ISOLATION VALVE WITH HANDWHEEL
- REDUCER
- FLANGE
- FLAME ARRESTOR (FA)
- RTU — REMOTE TERMINAL UNIT
- DIAPHRAM
- XXLS — PIG SIGNALLER
- VENT
- SPECTACLE BLIND

SYMBOLS

- PD METER
- TURBINE METER
- INSULATION JOINT (IJ)
- FLOW TEE (FWT)
- FIELD MOUNTED INSTRUMENT
- CONTROL PANEL MOUNTED INSTRUMENT
- ULTRASONIC METER
- SCADA INDICATOR, CONTROLLER OR OTHER DEVICES WITH OPERATOR ACCESS TO ADJUSTMENT.

ABBREVIATIONS

AE	ANALYZER SENSOR (GAS CHROMATOGRAPH)
AI	ANALYZER INDICATOR
AT	ANALYZER TRANSMITTER
FY	FLOW COMPUTER
FQI	FLOW TOTALIZER & INDICATOR
LG	LEVEL GAUGE
ZSH/ZSL	LIMIT SWITCHES (OPEN/CLOSE)
TI/TG	TEMPERATURE INDICATOR/ GAUGE
TE	TEMPERATURE ELEMENT
TW	THERMOWELL
DPI/DPG	DIFF. PRESSURE INDICATOR/ GAUGE
DPT	DIFF. PRESSURE TRANSMITTER
PI/PG	PRESSURE INDICATOR/ GAUGE
PT	PRESSURE TRANSMITTER
FC/FO	FAILURE TO CLOSE/OPEN
LO	LOCK OPEN
FIC/PIC	FLOW/PRESS. INDICATING CONTROLLER
I	INTERLOCK
XRL	LOCAL/REMOTE INDICATION
XSL	LOCAL/REMOTE SWITCH
HSH	HAND SWITCH HIGH
HSL	HAND SWITCH LOW
FT	FLOW TRANSMITTER
FE	FLOW ELEMENT
Q.O.E.C.	QUICK OPENING END CLOSURE

ABBREVIATIONS

TT	TEMP TRANSMITTER
FR	FLOW RECORDER
PIR	PRESSURE IND.RECORDER
TIR	TEMP. IND. RECORDER
PSH	PRESSURE SWITCH HIGH
PSL	PRESSURE SWITCH LOW
LSH	LEVEL SWITCH HIGH
LSL	LEVEL SWITCH LOW
LAH	LEVEL ALARM HIGH
LAL	LEVEL ALARM LOW
D	CONDENSATE DRAIN
A1A/B1A	150#/300# RATING
C1A/D1A	400#/600# RATING
LX/PX	PNEUMATIC/ ELECTRIC SIGNAL TRANSMITTER
FB	FULL BORE
SP	SAMPLER
NG	NATURAL GAS
V	VENT
AS	AUTO SAMPLER
CP	CORROSION PROBE
CC	CORROSION COUPON
AV	ACTUATED VALVE
SDV	SHUT DOWN VALVE
LV	LEVEL CONTROL VALVE
PV/PCV	PRESSURE CONTROL VALVE
FCV	FLOW CONTROL VALVE

00”–FLUID–00–00–A1A/B1A/C1A/D1A/D4A

- MATERIAL SPEC.
- LINE NO.
- UNIT NO.
- (P–NATURAL GAS)
- LINE SIZE (NOMINAL)

INDRADHANUSH GAS GRID LIMITED

मेकॉन लिमिटेड

MECON LIMITED

SECTION–9

REV.NO	DATE	ZONE	DESCRIPTION	BY	VERIFIED
			REVISION		

REFERENCES | DRG.NO.

© Copyright MECON LIMITED – All rights reserved.

THIS DRAWING IS THE PROPERTY OF MECON AND ISSUED FOR THE SPECIFIC PROJECT MENTIONED THEREIN. THIS IS NOT TO BE COPIED OR USED FOR OTHER PROJECTS UNLESS EXPRESSLY PERMITTED BY MECON.

SECTION	OIL & GAS
LOCATION	DELHI
DESIGNED	
DRAWN	SUNIL
CHECKED AND VERIFIED	
APPROVED	SIG / DATE

NORTH EAST GAS GRID (PHASE–II P/L SECTION)

LEGEND / DRAWING SYMBOLS

SCALE : NTS | SHEET 1 OF 2 | REV 0

DRG. NO. MEC/23UU/05/28/M/000/0001

REV / SEC | INST. | CONCURRED BY

DRG. NO. MEC/23UU/05/28/M/000/0001

SYMBOLS & ABBREVIATIONS

SYMBOLS

- SHUT-OFF VALVE, GENERAL
- SAFETY SHUT-OFF VALVE
- CONTINIUOUS-ACTION VALVE
- RIGHT-ANGLE SHUT-OFF VALVE, GENERAL
- THREE-WAY VALVE, GENERAL
- FOUR-WAY VALVE, GENERAL
- NEEDLE VALVE
- PUSHBUTTON VALVE
- CHECK VALVE (SPRING TYPE)
- NON RETURN VALVE (SWING TYPE)
- BUTTERFLY VALVE
- CONTINUOUSLY VARIABLE BORE BUTTERFLY VALVE
- LOUVRE
- SEPERATOR GENERAL
- 2 STAGE SEPERATOR
- CYCLONE SEPERATOR
- CONDENSATE TRAP
- FLOWMETER GENERAL
- METER GENERAL
- TURBINE METER
- VORTEX-SHEDDING FLOWMETER
- DIAPHRAGM METER
- MANUALLY OPERATED ACTUATOR, GENERAL
- DIAPHRAGM ACTUATOR
- PISTON ACTUATOR
- ELECTROMAGNETIC ACTUATOR
- HYDRAULIC OR PNEUMATIC ACTUATOR, GENERAL

SYMBOLS

- SPRING-OPERATED ACTUATOR
- AUTOMATICALLY OPERATED ACTUATOR, GENERAL
- ELECTRIC MOTOR-OPERATED ACTUATOR, GENERAL
- VALVE CLOSED ON FAILURE OF ACTUATING ENERGY
- VALVE OPENED ON FAILURE OF ACTUATING ENERGY
- VALVE RETAINS POSITION ON FAILURE OF ACTUATING ENERGY
- TURBINE, GENERAL
- COMPRESSOR, GENERAL
- ROTARY PISTON COMPRESSOR
- PISTON COMPRESSOR
- JET BOOSTER
- FAN, GENERAL
- HEAT EXCHANGER WITHOUT COUNTERFLOW
- COUNTERFLOW HEAT EXCHANGER
- PLATE HEAT EXCHANGER
- FINNED HEAT EXCHANGER WITH VENTILATOR
- BLIND PLATE
- "FIGURE 8" PLATE, BLIND PLATE IN FUNCTION
- "FIGURE 8" PLATE, GOGGLE PLATE IN FUNCTION
- ORIFICE PLATE
- INSULATING FLANGE
- INSULATING COUPLING
- STRAIGHTENING VANES
- RUPTURE DISK
- SIGHT GLASS. GENRAL
- EXPANSION JOINT
- SILENCER
- PULSATION DAMPENER
- MIXING NOZZLE
- CAP
- FLANGE CONNECTION

SYMBOLS

- FILTER, GENERAL
- GAS FILTER, GENERAL
- CARTRIDGE FILTER
- GAS SORPTION FILTER
- LIQUID FILTER, GENERAL
- "Y" TYPE STRAINER
- PRESSURE REDUCING VALVE, IN AUXILIARY AND CONTRAL FACILITIES
- PRESSURE CONTROL VALVE, GENERAL
- PROCESS PRIMARY LINE
- PROCESS SECONDARY LINE
- ELECTRIC LINE
- PNEUMATIC LINE
- CAPILLARY LINE
- INSTRUMENT LINE
- HEAT TRACING LINE
- JACKETED LINE
- JACKETED & HEATED LINE
- VENT STACK
- SCRAPPER TRAP
- LIQUID PUMP GENERAL
- CENTRIFUGAL PUMP
- LIQUID RING PUMP
- PISTON PUMP
- DIAPHRAGM PUMP
- CP — CORROSION PROBE
- CC — CORROSION COUPON

ABBREVIATIONS

ESD	EMERGRNCY SHUT-DOWN
EW	DRAIN
GCV	GAS-OPERATED CONTROL VALVE
GOV	GAS-OVER OIL OPERATED VALVE
HOV	HYDRAULIC-OPERATED VALVE
LC	LOCKED CLOSED
LO	LOCKED OPEN
LP	LOCKED POSITION
LPT	LOW POINT
MCV	MOTOR CONTROL VALVE
MH	MANHOLE
MOV	MOTOR-OPERATED VALVE
SV	SOLENOID VALVE
PCV	PRESSURE CONTROL VALVE
SAV SSV	SAFETY SHUT-OFF VALVE
SBV PRV	PRESSURE RELIFE VALVE
SP	SETPOINT
TE	THERMOCOUPLE
TW	THERMOWELL
NRV	NON-RETURN VALVE
CV	CHECK VALVE
FCV	FLOW CONTROL VALVE
PGS	POWER GAS SUPPLY
IAS	INTRUMENT AIR SUPPLY
NC	NORMAL CLOSED
NO	NORMAL OPEN

INDRADHANUSH GAS GRID LIMITED

मेकॉन लिमिटेड

MECON LIMITED

REV / SEC	INST.				
	CONCURRED BY				

SECTION-9

REV.NO	DATE	ZONE	DESCRIPTION	BY	VERIFIED
			REVISION		

REFERENCES	DRG.NO.

© Copyright MECON LIMITED - All rights reserved.
THIS DRAWING IS THE PROPERTY OF MECON AND ISSUED FOR THE SPECIFIC PROJECT MENTIONED THEREIN. THIS IS NOT TO BE COPIED OR USED FOR OTHER PROJECTS UNLESS EXPRESSLY PERMITTED BY MECON.

SECTION	OIL & GAS
LOCATION	DELHI
DESIGNED	
DRAWN	SUNIL
CHECKED AND VERIFIED	
APPROVED	SIG
	DATE

NORTH EAST GAS GRID (PHASE-II P/L SECTION)

LEGEND / DRAWING SYMBOLS

SCALE : NTS	SHEET	REV
DRG. NO. MEC/23UU/05/28/M/000/0001	2 OF 2	0

DRG. NO. MEC/23UU/05/28/M/002/0011

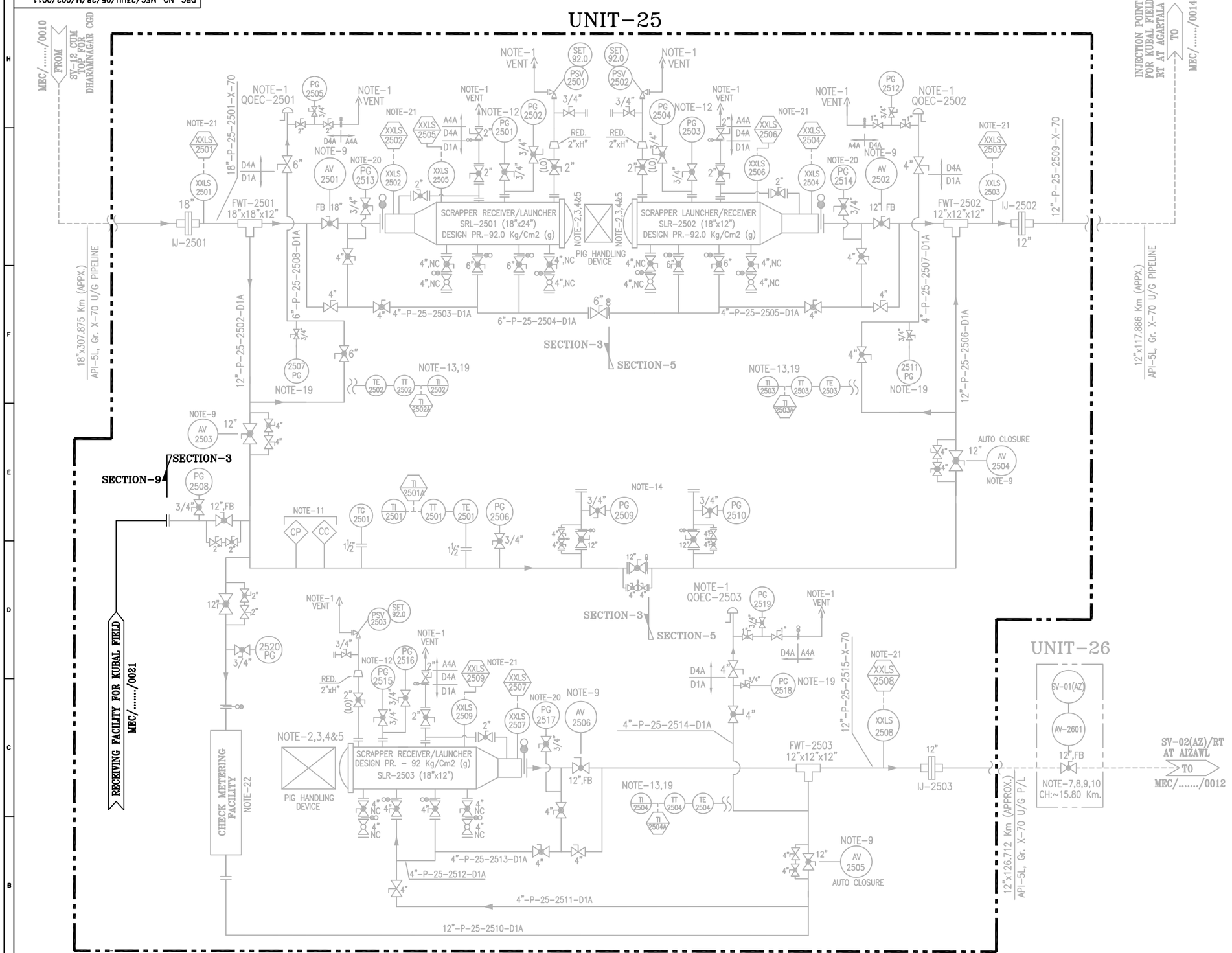

RECEIVING CUM DISPATCH TERMINAL CUM IPS AT PANISAGAR
(CH. 307.875 KMS. (APPROX) FROM DT AT GUWAHATI) OR (CH. 0.0 KMS. (APPROX) FROM PANISAGAR)

NOTES:

1. ALL VENTS SHALL BE LOCATED MIN. HEIGHT OF 3 MTR. ABOVE THE HIGHEST OPERATING LEVEL.
2. NOTE DELETED.
3. NOTE DELETED.
4. NOTE DELETED.
5. NOTE DELETED.
6. GAS DETECTORS TO BE PROVIDED NEAR FILTERS, FLOW METERS & SCRAPPER TRAPS. SIGNAL FROM GAS DETECTOR TO BE TAKEN IN CONTROL ROOM.
7. NOTE DELETED.
8. NOTE DELETED.
9. NOTE DELETED.
10. NOTE DELETED.
11. NOTE DELETED.
12. NOTE DELETED.
13. NOTE DELETED.
14. NOTE DELETED.
15. ALL BALL VALVES WITH BUTT WELDED END SHALL HAVE FULLY WELDED BODY.
16. ALL HIGHEST POINT & LOWEST POINT OF THE STATION PIPING SHALL BE PROVIDED WITH VENT & DRAIN FACILITY & SAME SHALL BE TAKEN CARE DURING PREPARATION OF GAD.
17. NOTE DELETED.
18. NOTE DELETED.
19. NOTE DELETED.
20. NOTE DELETED.
21. NOTE DELETED.
22. NOTE DELETED.

PROCESS DATA

FLUID: NATURAL GAS(DRY)/RLNG
FLOW: – MMSCMD (APPX.)
OPER. PRESS.: – KG/CM2(G)
DESIGN PRESS.: 92 KG/CM2(G)
DESIGN CLASS: 600#

TEMPERATURE
WORKING : 0°–55° C
DESIGN : –29 TO 65°C

LINE LEGEND

- PROPOSED LINE A/G
- PROPOSED LINE U/G
- LINE A/G (OTHER'S SCOPE)
- LINE U/G (OTHER'S SCOPE)

12"–P–25–2501–D1A
8"–P–25–2501–D1A
MATERIAL SPEC.
LINE NO.
UNIT NO.
PROCESS FLUID (NG/RLNG)
LINE SIZE (NOMINAL)

VALVE LEGEND

- BALL VALVE FLANGE END
- BALL VALVE BW END/UPTO 1½" SW END.
- PLUG VALVE BW END/UPTO 1½" SW END.
- PLUG VALVE FLANGE END
- GLOBE VALVE.

INDRADHANUSH GAS GRID LIMITED

मेकॉन लिमिटेड

MECON LIMITED

REV	DATE	ZONE	DESCRIPTION	BY	VERIFIED
2	03.11.20		GENERAL REVISION	UMAR	AKB
1	18.03.20		AS PER REVISED SCHEMATIC/ GENERAL REVISION	RASHMI	AKB
0	26.08.19		AS PER REVISED SCHEMATIC/ GENERAL REVISION	UMAR	AKB
A	20.06.19		FOR COMMENT PURPOSE	UMAR	AKB

REFERENCES	DRG.NO.
PIPELINE SCHEMATIC ROUTE DIAGRAM	MEC/23UU/05/28/M/001/1021 , REV – 1, SHEET 9 OF 14

© Copyright MECON LIMITED – All rights reserved.
THIS DRAWING IS THE PROPERTY OF MECON AND ISSUED FOR THE SPECIFIC PROJECT MENTIONED THEREIN. THIS IS NOT TO BE COPIED OR USED FOR OTHER PROJECTS UNLESS EXPRESSLY PERMITTED BY MECON.

SECTION	OIL & GAS
LOCATION	DELHI
DESIGNED	UMAR
DRAWN	UMAR
CHECKED AND VERIFIED	AKB
APPROVED	SIG A. GANGAL
DATE	15.09.21

NORTH EAST GAS GRID (PHASE–II P/L SECTION)

P&ID FOR RECEIVING CUM DISPATCH TERMINAL CUM IPS AT PANISAGAR

SCALE : NTS
DRG. NO. MEC/23UU/05/28/M/002/0011
REV 2

REV / SEC					
	PIPING				
	ELEC.				
	INST.				
	CONCURRED BY				

SECTION–9

DRG. NO. MEC/23UU/05/28/M/002/0021

UNIT–25

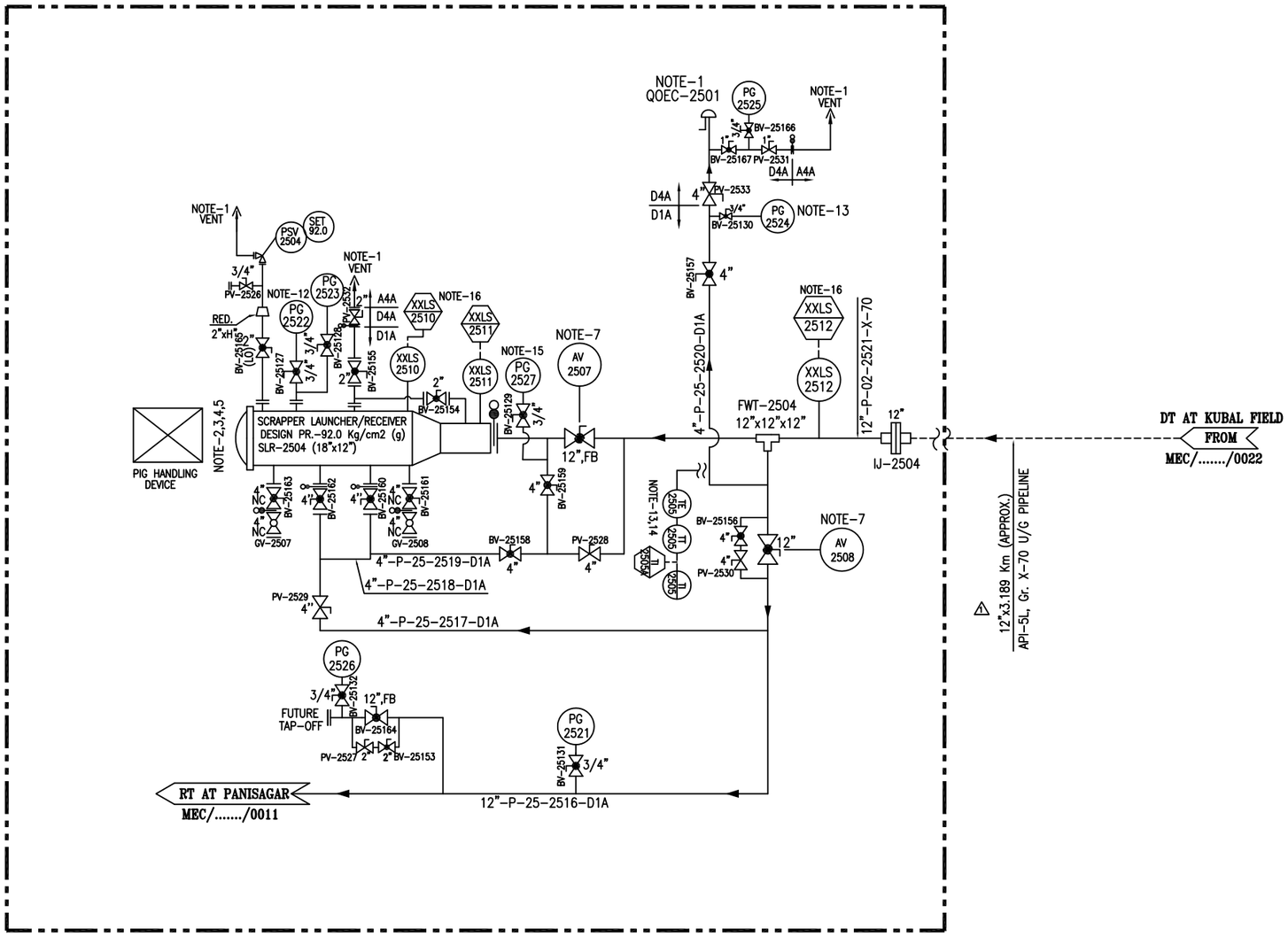

RECEIVING FACILITY FOR 12"NBX3.189 KMS. P/L FROM KUBAL FIELD AT RT PANISAGAR
(CH. ~0.0 KMS. FROM RT AT PANISAGAR)

TAG NUMBERS ASSOCIATED WITH AV VALVES			
AV VALVES	ITEM	SIZE	TAG NUMBERS
AV–2507	BALL VALVES	3/4"(FB,SW) 2"(FB,BW)	BV–25133 TO BV–25138 BV–25145 TO BV–25148
AV–2508	BALL VALVES	3/4"(FB,SW) 2"(FB,BW)	BV–25139 TO BV–25144 BV–25149 TO BV–25152

NOTES:

1. ALL VENTS SHALL BE LOCATED MIN. HEIGHT OF 3 MTR. ABOVE THE HIGHEST OPERATING LEVEL.
2. SCRAPPER LAUNCHER/RECEIVER SHALL HAVE SCRAPPER HANDLING FACILITY.
3. SCRAPPER LAUNCHER/RECEIVER SHALL BE SUITABLE FOR HANDLING INTELLIGENT PIGS.
4. SCRAPPER LAUNCHER/RECEIVER SHALL HAVE QUICK OPPENING CLOSURE.
5. SCRAPPER DOOR MECHANISM TO BE CONSTRUCTED SUCH THAT THE DOOR CAN NOT BE OPENED UNLESS SCRAPPER TRAP IS FULLY DEPRESSURISED.
6. GAS DETECTORS TO BE PROVIDED NEAR FILTERS, FLOW METERS & SCRAPPER TRAPS. SIGNAL FROM GAS DETECTOR TO BE TAKEN IN CONTROL ROOM.
7. FOR SV, HOV & AV DETAIL REFER DRG. NO. MEC/23UU/05/28/M/002/0016.
8. NOTE DELETED.
9. ALL BALL VALVES WITH BUTT WELDED END SHALL HAVE FULLY WELDED BODY.
10. ALL HIGHEST POINT & LOWEST POINT OF THE STATION PIPING SHALL BE PROVIDED WITH VENT & DRAIN FACILITY & SAME SHALL BE TAKEN CARE DURING PREPARATION OF GAD.
11. SUPPORT SHALL BE PROVIDED BEFORE & AFTER MAINLINE IJ.
12. PG–2522 SHALL HAVE A RANGE OF 0–1 KG/CM2(g) WITH A GAUGE SAVER.
13. DEPRESSURIZATION VALVE SHALL BE LOCATED IN SUCH A WAY THAT PG–2524 & TI–2505 CAN BE READ DURING VENTING. 1" VALVE ON VENT LINE OF THE QOEC LINE SHALL BE APPROCHABLE FOR OPERATION.
14. DIRECT SURFACE CONTACT TYPE.
15. PG–2527 SHALL HAVE A RANGE OF 0–5 KG/CM2(G) WITH A GAUGE SAVER & LEAST COUNT OF 0.1 KG/CM2(G).
16. ALL PIG SIGNALLER SHALL BE OF NON–INTRUSIVE TYPE.

PROCESS DATA

FLUID: NATURAL GAS(DRY)/RLNG
FLOW: – MMSCMD (APPX.)
OPER. PRESS.: – KG/CM2(G)
DESIGN PRESS.: 92 KG/CM2(G)
DESIGN CLASS: 600#

TEMPERATURE
WORKING : 0°–55° C
DESIGN –29 TO 65°C

LINE LEGEND

——— PROPOSED LINE A/G
------ PROPOSED LINE U/G

12"–P–15–1501–D1A
- MATERIAL SPEC.
- LINE NO.
- UNIT NO.
- PROCESS FLUID (NG/RLNG)
- LINE SIZE (NOMINAL)

VALVE LEGEND

- BALL VALVE FLANGE END
- BALL VALVE BW END/UPTO 1½" SW END.
- PLUG VALVE BW END/UPTO 1½" SW END.
- PLUG VALVE FLANGE END
- GLOBE VALVE.

INDRADHANUSH GAS GRID LIMITED
मेकॉन लिमिटेड
MECON LIMITED

REV	DATE	ZONE	DESCRIPTION	BY	VERIFIED
1	15.09.21		AS PER REVISED SCHEMATIC	UMAR	AKB

REVISION

REFERENCES	DRG.NO.
PIPELINE SCHEMATIC ROUTE DIAGRAM	MEC/23UU/05/28/M/001/1021 , REV – 1, SHEET 9 OF 14

© Copyright MECON LIMITED – All rights reserved.
THIS DRAWING IS THE PROPERTY OF MECON AND ISSUED FOR THE SPECIFIC PROJECT MENTIONED THEREIN. THIS IS NOT TO BE COPIED OR USED FOR OTHER PROJECTS UNLESS EXPRESSLY PERMITTED BY MECON.

SECTION	OIL & GAS
LOCATION	DELHI
DESIGNED	UMAR
DRAWN	UMAR
CHECKED AND VERIFIED	AKB
APPROVED	SIG A. GANGAL
DATE	15.09.21

NORTH EAST GAS GRID (PHASE–II P/L SECTION)

P & ID FOR RECEIVING FACILITY FOR 12"NBX3.189 KMS. P/L FROM KUBAL FIELD AT RT PANISAGAR

SCALE : NTS
DRG. NO. MEC/23UU/05/28/M/002/0021
REV 1

REV / SEC	PIPING	ELEC.	INST.	CONCURRED BY

SECTION–9

UNIT-48

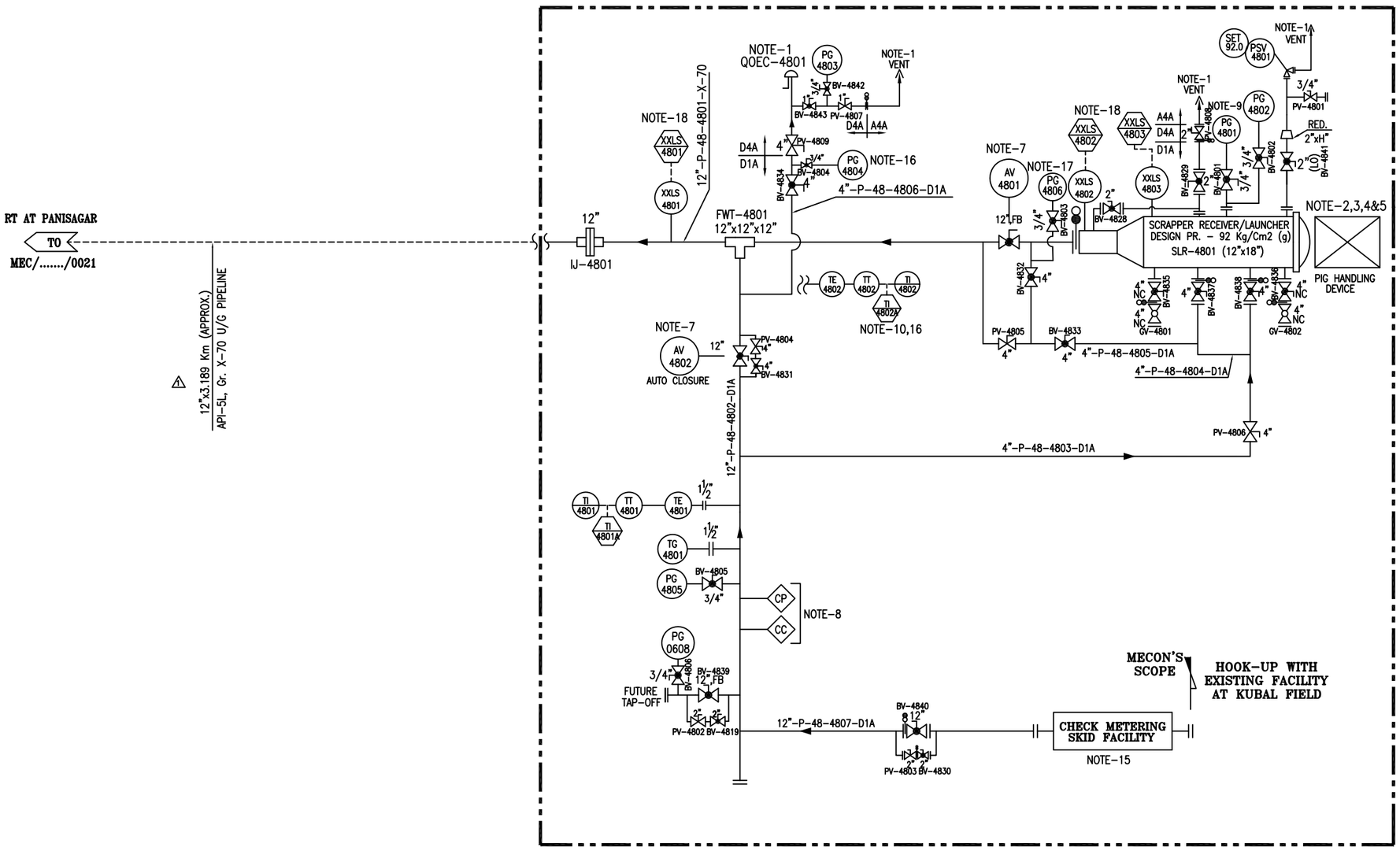

DISPATCH TERMINAL AT KUBAL FIELD
(CH. ~3.189 KMS. FROM RT AT PANISAGAR)

TAG NUMBERS ASSOCIATED WITH AV VALVES			
AV VALVES	ITEM	SIZE	TAG NUMBERS
AV-4801	BALL VALVES	3/4"(FB,SW) 2"(FB,BW)	BV-4807 TO BV-4812 BV-4820 TO BV-4823
AV-4802	BALL VALVES	3/4"(FB,SW) 2"(FB,BW)	BV-4813 TO BV-4818 BV-4824 TO BV-4827

NOTES:

1. ALL VENTS SHALL BE LOCATED MIN. HEIGHT OF 3 MTR. ABOVE THE HIGHEST OPERATING LEVEL.
2. SCRAPPER LAUNCHER/RECEIVER SHALL HAVE SCRAPPER HANDLING FACILITY.
3. SCRAPPER LAUNCHER/RECEIVER SHALL BE SUITABLE FOR HANDLING INTELLIGENT PIGS.
4. SCRAPPER LAUNCHER/RECEIVER SHALL HAVE QUICK OPPENING CLOSURE.
5. SCRAPPER DOOR MECHANISM TO BE CONSTRUCTED SUCH THAT THE DOOR CAN NOT BE OPENED UNLESS SCRAPPER TRAP IS FULLY DEPRESSURISED.
6. GAS DETECTORS TO BE PROVIDED NEAR FILTERS, FLOW METERS & SCRAPPER TRAPS. SIGNAL FROM GAS DETECTOR TO BE TAKEN IN CONTROL ROOM.
7. FOR SV, HOV & AV DETAIL REFER DRG. NO. MEC/23UU/05/28/M/002/0016.
8. ONLINE RETRIVEL TYPE CORROSION MONITORING COUPON AND CORROSION PROBE SHALL BE PROVIDED. FURTHER WHEREVER SCADA SYSTEM ARE AVAILABLE, THIS SYSTEM SHALL BE ONLINE SCADA COMPATIBLE OTHERWISE DATA SHALL BE COLLECTED BY OFFLINE DATA LOGGER.
9. PG-4801 SHALL HAVE A RANGE OF 0-1 KG/CM2(g) WITH A GAUGE SAVER.
10. DIRECT SURFACE CONTACT TYPE.
11. ALL BALL VALVES WITH BUTT WELDED END SHALL HAVE FULLY WELDED BODY.
12. ALL HIGHEST POINT & LOWEST POINT OF THE STATION PIPING SHALL BE PROVIDED WITH VENT & DRAIN FACILITY & SAME SHALL BE TAKEN CARE DURING PREPARATION OF GAD.
13. NOTE DELETED.
14. SUPPORT SHALL BE PROVIDED BEFORE & AFTER MAINLINE IJ.
15. CHECK METERING SKID P&ID SHALL BE PROVIDED SEPARATELY.
16. DEPRESSURIZATION VALVE SHALL BE LOCATED IN SUCH A WAY THAT PG-4804 & TI-4802 CAN BE READ DURING VENTING. 1" VALVE ON VENT LINE OF THE QOEC LINE SHALL BE APPROCHABLE FOR OPERATION.
17. PG-4806 SHALL HAVE A RANGE OF 0-5 KG/CM2(G) WITH A GAUGE SAVER & LEAST COUNT OF 0.1 KG/CM2(G).
18. ALL PIG SIGNALLER SHALL BE OF NON-INTRUSIVE TYPE.

PROCESS DATA

FLUID: NATURAL GAS(DRY)/RLNG
FLOW: - MMSCMD (APPX.)
OPER. PRESS.: - KG/CM2(G)
DESIGN PRESS.: 92 KG/CM2(G)
DESIGN CLASS: 600#

TEMPERATURE
WORKING : 0°-55° C
DESIGN : -29 TO 65°C

LINE LEGEND

PROPOSED LINE A/G
PROPOSED LINE U/G

12"-P-48-4801-D1A
- MATERIAL SPEC.
- LINE NO.
- UNIT NO.
- PROCESS FLUID (NG/RLNG)
- LINE SIZE (NOMINAL)

VALVE LEGEND

BALL VALVE FLANGE END
BALL VALVE BW END/UPTO 1½" SW END.
PLUG VALVE BW END/UPTO 1½" SW END.
PLUG VALVE FLANGE END
GLOBE VALVE.

INDRADHANUSH GAS GRID LIMITED
मेकॉन लिमिटेड
MECON LIMITED

REV					
	PIPING				
	ELEC.				
	INST.				
SEC	CONCURRED BY				

SECTION-9

REV.NO	DATE	ZONE	DESCRIPTION	BY	VERIFIED
1	15.09.21		AS PER REVISED SCHEMATIC	UMAR	AKB

REFERENCES	DRG.NO.
PIPELINE SCHEMATIC ROUTE DIAGRAM	MEC/23UU/05/28/M/001/1021, REV - 1, SHEET 9 OF 14

© Copyright MECON LIMITED - All rights reserved.
THIS DRAWING IS THE PROPERTY OF MECON AND ISSUED FOR THE SPECIFIC PROJECT MENTIONED THEREIN. THIS IS NOT TO BE COPIED OR USED FOR OTHER PROJECTS UNLESS EXPRESSLY PERMITTED BY MECON.

SECTION	OIL & GAS
LOCATION	DELHI
DESIGNED	UMAR
DRAWN	UMAR
CHECKED AND VERIFIED	AKB
APPROVED	SIG A. GANGAL
	DATE 15.09.21

NORTH EAST GAS GRID (PHASE-II P/L SECTION)

P&ID FOR DISPATCH TERMINAL AT KUBAL FIELD

SCALE : NTS
DRG. NO. MEC/23UU/05/28/M/002/0022
REV 1

DRG. NO. MEC/23UU/05/28/M/002/0016

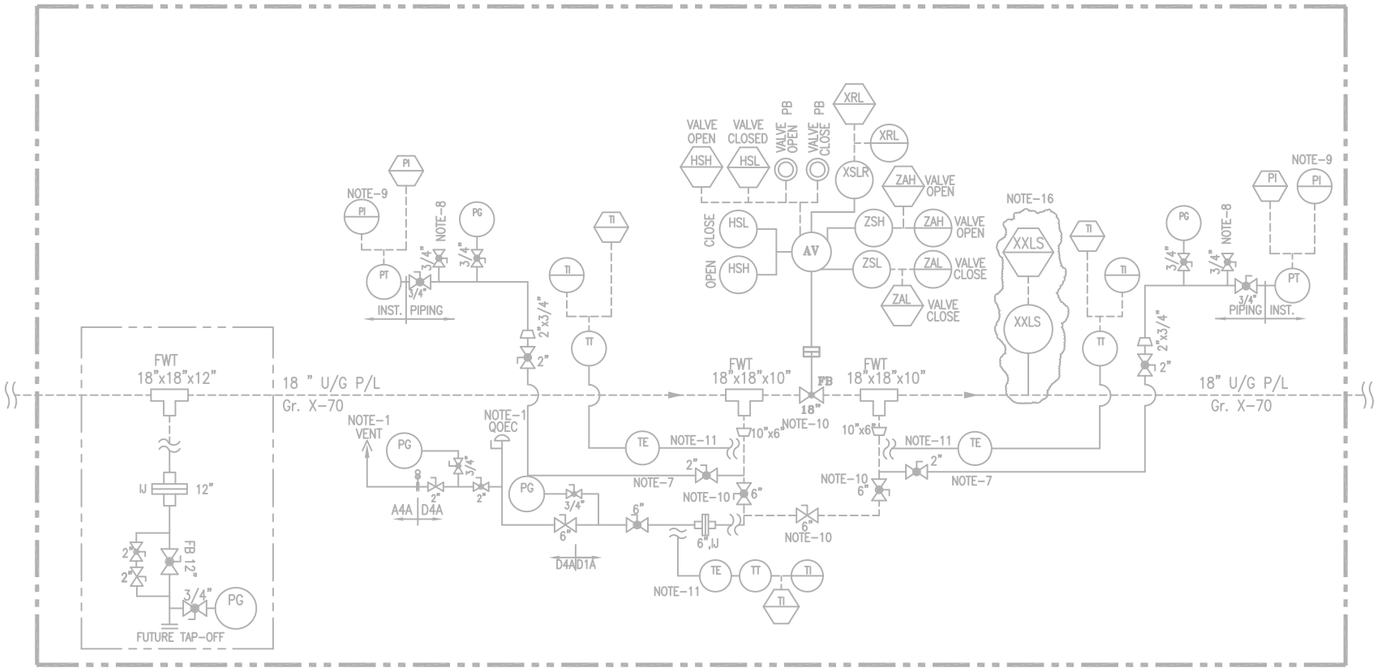

TYPICAL ARRANGEMENT FOR 18" SV (REMOTE OPERATED)

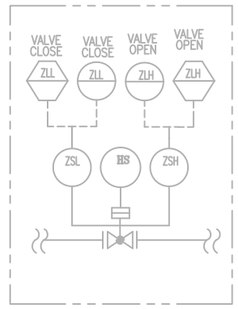

TYPICAL HOV ARRANGEMENT

NOTE:-

1. NOTE DELETED.
2. NOTE DELETED.
3. ALL AV (ACTUATED VALVES) SHALL BE FAILED TO STAY PUT TYPE VALVE.
4. NOTE DELETED.
5. NOTE DELETED.
6. NOTE DELETED.
7. ALL PG, PT CONNECTION SHALL BE TAKEN FROM 2" TWO ISOLATION VALVES AND THEN AFTER IT SHOULD BE CONVERTED TO REQUIRE NPT CONNECTION.
8. GAS TAPPING FOR VALVE ACTUATOR.
9. FOR PG & PT DETAIL REFER MECON STANDARD DRG.
10. NOTE DELETED.
11. NOTE DELETED.
12. ALL BALL VALVES WITH BUTT WELDED END SHALL HAVE FULLY WELDED BODY.
13. ALL HIGHEST POINT & LOWEST POINT OF THE STATION PIPING SHALL BE PROVIDED WITH VENT & DRAIN FACILITY & SAME SHALL BE TAKEN CARE DURING PREPARATION OF GAD.
14. NOTE DELETED.
15. NOTE DELETED.
16. NOTE DELETED.

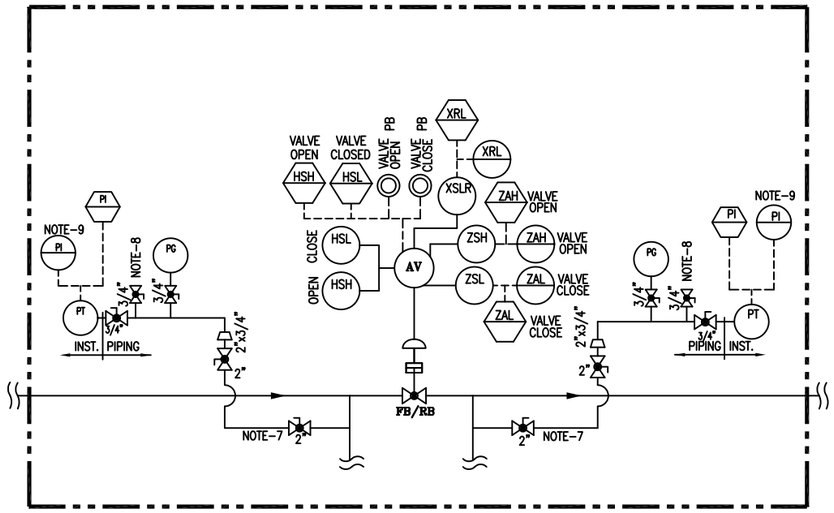

TYPICAL ARRANGEMENT FOR AV

LINE LEGEND

- PROPOSED LINE A/G
- PROPOSED LINE U/G
- LINE A/G (OTHER'S SCOPE)
- LINE U/G (OTHER'S SCOPE)

VALVE LEGEND

- BALL VALVE FLANGE END
- BALL VALVE BW END/UPTO 1 1/2" SW END.
- PLUG VALVE BW END/UPTO 1 1/2" SW END.
- PLUG VALVE FLANGE END
- GLOBE VALVE.

INDRADHANUSH GAS GRID LIMITED

मेकॉन लिमिटेड

MECON LIMITED

REV	DATE	ZONE	DESCRIPTION	BY	VERIFIED
1	18.12.20		GENERAL REVISION	UMAR	AKB
0	26.08.19		AS PER REVISED SCHEMATIC/ GENERAL REVISION	UMAR	AKB
A	20.06.19		FOR COMMENT PURPOSE	UMAR	AKB

REVISION

REFERENCES	DRG.NO.
PIPELINE SCHEMATIC ROUTE DIAGRAM	MEC/23UU/05/28/M/001/1021 , REV – 1, SHEET 9 OF 14

© Copyright MECON LIMITED – All rights reserved.

THIS DRAWING IS THE PROPERTY OF MECON AND ISSUED FOR THE SPECIFIC PROJECT MENTIONED THEREIN. THIS IS NOT TO BE COPIED OR USED FOR OTHER PROJECTS UNLESS EXPRESSLY PERMITTED BY MECON.

SECTION	OIL & GAS
LOCATION	DELHI
DESIGNED	UMAR
DRAWN	UMAR
CHECKED AND VERIFIED	AKB
APPROVED	SIG A. GANGAL
DATE	15.09.21

NORTH EAST GAS GRID (PHASE–II P/L SECTION)

TYPICAL ARRANGEMENT FOR AV

SCALE : NTS

DRG. NO. MEC/23UU/05/28/M/002/0016

REV 1

REV / SEC	PIPING	ELEC.	INST.
CONCURRED BY			

SECTION–9

DRG. NO. MEC/23UU/05/28/M/000/0001

SYMBOLS & ABBREVIATIONS

SYMBOLS

- VP–PLUG VALVE
- VB–BALL VALVE WELDED END
- VB–BALL VALVE FLANGED END
- GATE VALVE
- GV–GLOBE VALVE
- PRESSURE RELIEF OR SAFETY VALVE (PSV)
- PRESSURE REGULATING VALVE (PCV) (SELF ACTUATING TYPE)
- NON RETURN VALVE
- CONTROL VALVE WITH SLAM SHUT–OFF VALVE
- SOLENOID VALVE
- GAS ACTUATED ISOLATION VALVE
- GAS ACTUATED ISOLATION VALVE WITH HANDWHEEL
- REDUCER
- FLANGE
- FLAME ARRESTOR (FA)
- RTU — REMOTE TERMINAL UNIT
- DIAPHRAM
- XXLS — PIG SIGNALLER
- VENT
- SPECTACLE BLIND

SYMBOLS

- PD METER
- TURBINE METER
- INSULATION JOINT (IJ)
- FLOW TEE (FWT)
- FIELD MOUNTED INSTRUMENT
- CONTROL PANEL MOUNTED INSTRUMENT
- ULTRASONIC METER
- SCADA INDICATOR, CONTROLLER OR OTHER DEVICES WITH OPERATOR ACCESS TO ADJUSTMENT.

ABBREVIATIONS

AE	ANALYZER SENSOR (GAS CHROMATOGRAPH)
AI	ANALYZER INDICATOR
AT	ANALYZER TRANSMITTER
FY	FLOW COMPUTER
FQI	FLOW TOTALIZER & INDICATOR
LG	LEVEL GAUGE
ZSH/ZSL	LIMIT SWITCHES (OPEN/CLOSE)
TI/TG	TEMPERATURE INDICATOR/ GAUGE
TE	TEMPERATURE ELEMENT
TW	THERMOWELL
DPI/DPG	DIFF. PRESSURE INDICATOR/ GAUGE
DPT	DIFF. PRESSURE TRANSMITTER
PI/PG	PRESSURE INDICATOR/ GAUGE
PT	PRESSURE TRANSMITTER
FC/FO	FAILURE TO CLOSE/OPEN
LO	LOCK OPEN
FIC/PIC	FLOW/PRESS. INDICATING CONTROLLER
I	INTERLOCK
XRL	LOCAL/REMOTE INDICATION
XSL	LOCAL/REMOTE SWITCH
HSH	HAND SWITCH HIGH
HSL	HAND SWITCH LOW
FT	FLOW TRANSMITTER
FE	FLOW ELEMENT
Q.O.E.C.	QUICK OPENING END CLOSURE

ABBREVIATIONS

TT	TEMP TRANSMITTER
FR	FLOW RECORDER
PIR	PRESSURE IND.RECORDER
TIR	TEMP. IND. RECORDER
PSH	PRESSURE SWITCH HIGH
PSL	PRESSURE SWITCH LOW
LSH	LEVEL SWITCH HIGH
LSL	LEVEL SWITCH LOW
LAH	LEVEL ALARM HIGH
LAL	LEVEL ALARM LOW
D	CONDENSATE DRAIN
A1A/B1A	150#/300# RATING
C1A/D1A	400#/600# RATING
LX/PX	PNEUMATIC/ ELECTRIC SIGNAL TRANSMITTER
FB	FULL BORE
SP	SAMPLER
NG	NATURAL GAS
V	VENT
AS	AUTO SAMPLER
CP	CORROSION PROBE
CC	CORROSION COUPON
AV	ACTUATED VALVE
SDV	SHUT DOWN VALVE
LV	LEVEL CONTROL VALVE
PV/PCV	PRESSURE CONTROL VALVE
FCV	FLOW CONTROL VALVE

00”–FLUID–00–00–A1A/B1A/C1A/D1A/D4A

- MATERIAL SPEC.
- LINE NO.
- UNIT NO.
- (P–NATURAL GAS)
- LINE SIZE (NOMINAL)

INDRADHANUSH GAS GRID LIMITED

मेकॉन लिमिटेड

MECON LIMITED

SECTION	OIL & GAS
LOCATION	DELHI
DESIGNED	
DRAWN	SUNIL
CHECKED AND VERIFIED	
APPROVED	SIG
	DATE

NORTH EAST GAS GRID (PHASE–1 P/L SECTION)

LEGEND / DRAWING SYMBOLS

SCALE : NTS | SHEET 1 OF 2 | REV 0

DRG. NO. MEC/23UU/05/28/M/000/0001

SECTION–8

REV	INST.
SEC	CONCURRED BY

REV.NO	DATE	ZONE	DESCRIPTION	BY	VERIFIED
			REVISION		

REFERENCES | DRG.NO.

© Copyright MECON LIMITED – All rights reserved.

THIS DRAWING IS THE PROPERTY OF MECON AND ISSUED FOR THE SPECIFIC PROJECT MENTIONED THEREIN. THIS IS NOT TO BE COPIED OR USED FOR OTHER PROJECTS UNLESS EXPRESSLY PERMITTED BY MECON.

DRG. NO. MEC/23UU/05/28/M/000/0001

SYMBOLS & ABBREVIATIONS

SYMBOLS

- SHUT-OFF VALVE, GENERAL
- SAFETY SHUT-OFF VALVE
- CONTINIUOUS-ACTION VALVE
- RIGHT-ANGLE SHUT-OFF VALVE, GENERAL
- THREE-WAY VALVE, GENERAL
- FOUR-WAY VALVE, GENERAL
- NEEDLE VALVE
- PUSHBUTTON VALVE
- CHECK VALVE (SPRING TYPE)
- NON RETURN VALVE (SWING TYPE)
- BUTTERFLY VALVE
- CONTINUOUSLY VARIABLE BORE BUTTERFLY VALVE
- LOUVRE
- SEPERATOR GENERAL
- 2 STAGE SEPERATOR
- CYCLONE SEPERATOR
- CONDENSATE TRAP
- FLOWMETER GENERAL
- METER GENERAL
- TURBINE METER
- VORTEX-SHEDDING FLOWMETER
- DIAPHRAGM METER
- MANUALLY OPERATED ACTUATOR, GENERAL
- DIAPHRAGM ACTUATOR
- PISTON ACTUATOR
- ELECTROMAGNETIC ACTUATOR
- HYDRAULIC OR PNEUMATIC ACTUATOR, GENERAL

SYMBOLS

- SPRING-OPERATED ACTUATOR
- AUTOMATICALLY OPERATED ACTUATOR, GENERAL
- ELECTRIC MOTOR-OPERATED ACTUATOR, GENERAL
- VALVE CLOSED ON FAILURE OF ACTUATING ENERGY
- VALVE OPENED ON FAILURE OF ACTUATING ENERGY
- VALVE RETAINS POSITION ON FAILURE OF ACTUATING ENERGY
- TURBINE, GENERAL
- COMPRESSOR, GENERAL
- ROTARY PISTON COMPRESSOR
- PISTON COMPRESSOR
- JET BOOSTER
- FAN, GENERAL
- HEAT EXCHANGER WITHOUT COUNTERFLOW
- COUNTERFLOW HEAT EXCHANGER
- PLATE HEAT EXCHANGER
- FINNED HEAT EXCHANGER WITH VENTILATOR
- BLIND PLATE
- "FIGURE 8" PLATE, BLIND PLATE IN FUNCTION
- "FIGURE 8" PLATE, GOGGLE PLATE IN FUNCTION
- ORIFICE PLATE
- INSULATING FLANGE
- INSULATING COUPLING
- STRAIGHTENING VANES
- RUPTURE DISK
- SIGHT GLASS. GENRAL
- EXPANSION JOINT
- SILENCER
- PULSATION DAMPENER
- MIXING NOZZLE
- CAP
- FLANGE CONNECTION

SYMBOLS

- FILTER, GENERAL
- GAS FILTER, GENERAL
- CARTRIDGE FILTER
- GAS SORPTION FILTER
- LIQUID FILTER, GENERAL
- "Y" TYPE STRAINER
- PRESSURE REDUCING VALVE, IN AUXILIARY AND CONTRAL FACILITIES
- PRESSURE CONTROL VALVE, GENERAL
- PROCESS PRIMARY LINE
- PROCESS SECONDARY LINE
- ELECTRIC LINE
- PNEUMATIC LINE
- CAPILLARY LINE
- INSTRUMENT LINE
- HEAT TRACING LINE
- JACKETED LINE
- JACKETED & HEATED LINE
- VENT STACK
- SCRAPPER TRAP
- LIQUID PUMP GENERAL
- CENTRIFUGAL PUMP
- LIQUID RING PUMP
- PISTON PUMP
- DIAPHRAGM PUMP
- CP — CORROSION PROBE
- CC — CORROSION COUPON

ABBREVIATIONS

ESD	EMERGRNCY SHUT-DOWN
EW	DRAIN
GCV	GAS-OPERATED CONTROL VALVE
GOV	GAS-OVER OIL OPERATED VALVE
HOV	HYDRAULIC-OPERATED VALVE
LC	LOCKED CLOSED
LO	LOCKED OPEN
LP	LOCKED POSITION
LPT	LOW POINT
MCV	MOTOR CONTROL VALVE
MH	MANHOLE
MOV	MOTOR-OPERATED VALVE
SV	SOLENOID VALVE
PCV	PRESSURE CONTROL VALVE
SAV SSV	SAFETY SHUT-OFF VALVE
SBV PRV	PRESSURE RELIFE VALVE
SP	SETPOINT
TE	THERMOCOUPLE
TW	THERMOWELL
NRV	NON-RETURN VALVE
CV	CHECK VALVE
FCV	FLOW CONTROL VALVE
PGS	POWER GAS SUPPLY
IAS	INTRUMENT AIR SUPPLY
NC	NORMAL CLOSED
NO	NORMAL OPEN

INDRADHANUSH GAS GRID LIMITED

मेकॉन लिमिटेड

MECON LIMITED

SECTION	OIL & GAS
LOCATION	DELHI
DESIGNED	
DRAWN	SUNIL
CHECKED AND VERIFIED	
APPROVED	SIG
	DATE

NORTH EAST GAS GRID (PHASE-1 P/L SECTION)

LEGEND / DRAWING SYMBOLS

SCALE : NTS | SHEET | REV

DRG. NO. MEC/23UU/05/28/M/000/0001 | 2 OF 2 | 0

SECTION-8

REV.NO	DATE	ZONE	DESCRIPTION	BY	VERIFIED
			REVISION		

REFERENCES | DRG.NO.

© Copyright MECON LIMITED - All rights reserved.
THIS DRAWING IS THE PROPERTY OF MECON AND ISSUED FOR THE SPECIFIC PROJECT MENTIONED THEREIN. THIS IS NOT TO BE COPIED OR USED FOR OTHER PROJECTS UNLESS EXPRESSLY PERMITTED BY MECON.

REV / SEC | INST. | CONCURRED BY

DRG. NO. MEC/23UU/05/28/M/001/0010

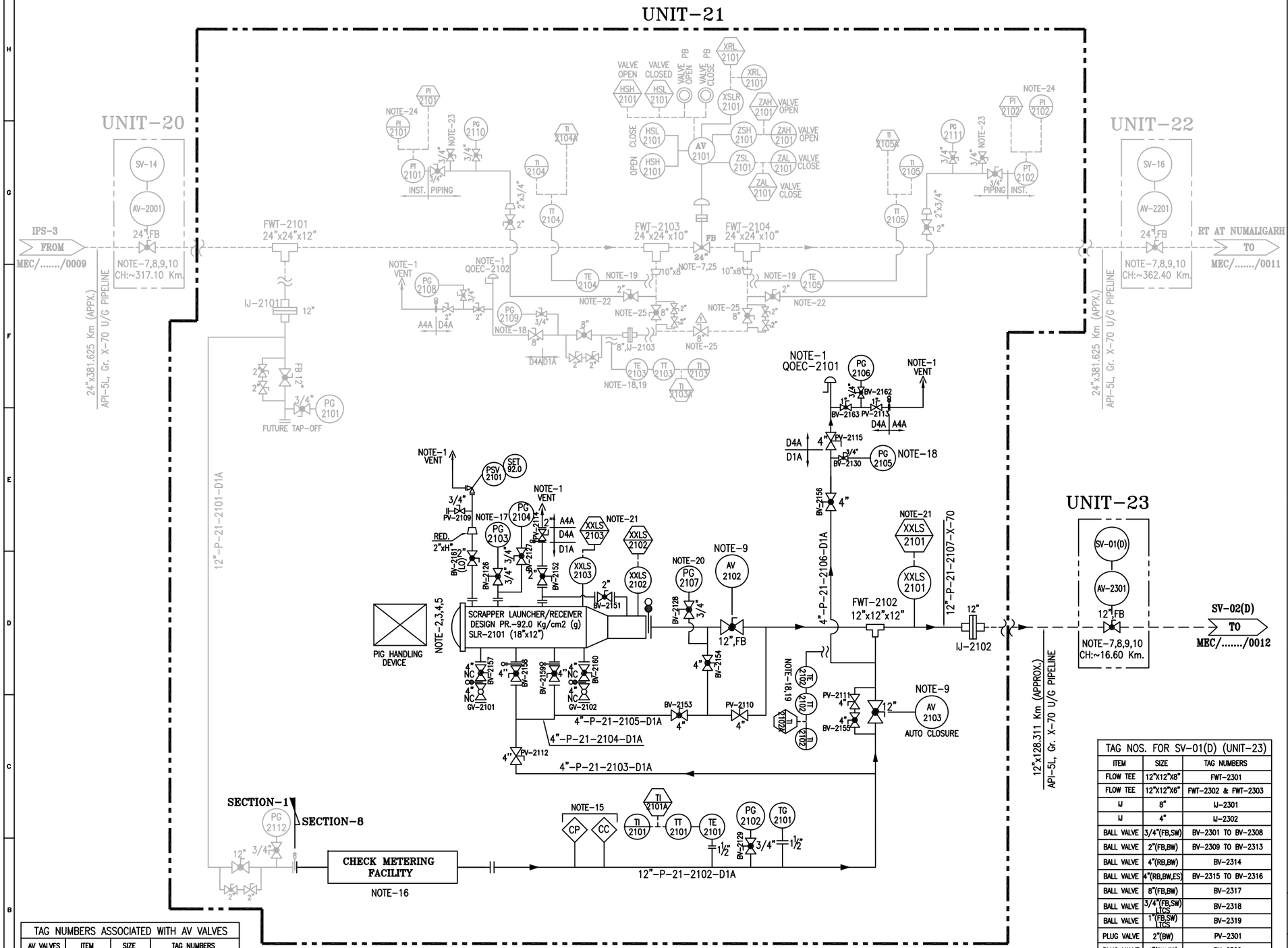

SV-15 CUM DISPATCH FACILITY FOR 12"NBX128.311 KMS. P/L TO RT DIMAPUR (CUM FUTURE IPS) AT RANGAGARA KHUTI (JORHAT) (CH. 340.50 KMS. (APPROX) FROM DT AT GUWAHATI (BAR PALAHA))

NOTES:

1. ALL VENTS SHALL BE LOCATED MIN. HEIGHT OF 3 MTR. ABOVE THE HIGHEST OPERATING LEVEL.
2. SCRAPPER LAUNCHER/RECEIVER SHALL HAVE SCRAPPER HANDLING FACILITY.
3. SCRAPPER LAUNCHER/RECEIVER SHALL BE SUITABLE FOR HANDLING INTELLIGENT PIGS.
4. SCRAPPER LAUNCHER/RECEIVER SHALL HAVE QUICK OPPENING CLOSURE.
5. SCRAPPER DOOR MECHANISM TO BE CONSTRUCTED SUCH THAT THE DOOR CAN NOT BE OPENED UNLESS SCRAPPER TRAP IS FULLY DEPRESSURISED.
6. GAS DETECTORS TO BE PROVIDED NEAR FILTERS, FLOW METERS & SCRAPPER TRAPS. SIGNAL FROM GAS DETECTOR TO BE TAKEN IN CONTROL ROOM.
7. ALL SV ARE EXTENDED STEM, BUTT WELDED END WITH FULLY WELDED BODY & FULL BORE BALL VALVE.
8. BURRIED VALVE SHALL BE PROVIDED WITH CORROSION PROTECTION COATING.
9. FOR SV, HOV & AV DETAIL REFER DRG. NO. MEC/23UU/05/28/M/001/0015, /0016 & /0017.
10. LOCATION OF SV STATIONS AND THEIR CHAINAGES ARE AS PER PIPELINE SCHEMATIC ROUTE DIAGRAM. HOWEVER LOCATIONS OF SV MAY GET SLIGHTLY CHANGED AS PER AVAILABILITY OF PLOT TO M/s IGGL.
11. ALL BALL VALVES WITH BUTT WELDED END SHALL HAVE FULLY WELDED BODY.
12. ALL HIGHEST POINT & LOWEST POINT OF THE STATION PIPING SHALL BE PROVIDED WITH VENT & DRAIN FACILITY & SAME SHALL BE TAKEN CARE DURING PREPARATION OF GAD.
13. NOTE DELETED.
14. SUPPORT SHALL BE PROVIDED BEFORE & AFTER MAINLINE IJ.
15. ONLINE RETRIVEL TYPE CORROSION MONITORING COUPON AND CORROSION PROBE SHALL BE PROVIDED. FURTHER WHEREVER SCADA SYSTEM ARE AVAILABLE, THIS SYSTEM SHALL BE ONLINE SCADA COMPATIBLE OTHERWISE DATA SHALL BE COLLECTED BY OFFLINE DATA LOGGER.
16. CHECK METERING P&ID SHALL BE PROVIDED SEPARATELY. SAME SHALL BE BI-DIRECTIONAL.
17. PG-2103 SHALL HAVE A RANGE OF 0-1 KG/CM2(g) WITH A GAUGE SAVER.
18. DEPRESSURIZATION VALVE SHALL BE LOCATED IN SUCH A WAY THAT PG-2105 & TI-2102 CAN BE READ DURING VENTING. 1" VALVE ON VENT LINE OF THE QOEC LINE SHALL BE APPROCHABLE FOR OPERATION.
19. DIRECT SURFACE CONTACT TYPE.
20. PG-2107 SHALL HAVE A RANGE OF 0-5 KG/CM2(G) WITH A GAUGE SAVER & LEAST COUNT OF 0.1 KG/CM2(G).
21. ALL PIG SIGNALLER SHALL BE OF NON-INTRUSIVE TYPE.
22. NOTE DELETED.
23. NOTE DELETED.
24. NOTE DELETED.
25. NOTE DELETED.

PROCESS DATA

FLUID: NATURAL GAS(DRY)/RLNG	TEMPERATURE
FLOW: – MMSCMD (APPX.)	WORKING : 0°–55° C
OPER. PRESS.: – KG/CM2(G)	DESIGN : –29 TO 65°C
DESIGN PRESS.: 92 KG/CM2(G)	
DESIGN CLASS: 600#	

LINE LEGEND

- PROPOSED LINE A/G
- PROPOSED LINE U/G
- LINE A/G (OTHER'S SCOPE)
- LINE U/G (OTHER'S SCOPE)

24"-P-01-0101-D1A

- MATERIAL SPEC.
- LINE NO.
- UNIT NO.
- PROCESS FLUID (NG/RLNG)
- LINE SIZE (NOMINAL)

VALVE LEGEND

- BALL VALVE FLANGE END
- BALL VALVE BW END/UPTO 1½" SW END.
- PLUG VALVE BW END/UPTO 1½" SW END.
- PLUG VALVE FLANGE END
- GLOBE VALVE.

TAG NOS. FOR SV-01(D) (UNIT-23)

ITEM	SIZE	TAG NUMBERS
FLOW TEE	12"X12"X8"	FWT-2301
FLOW TEE	12"X12"X6"	FWT-2302 & FWT-2303
IJ	8"	IJ-2301
IJ	4"	IJ-2302
BALL VALVE	3/4"(FB,SW)	BV-2301 TO BV-2308
BALL VALVE	2"(FB,BW)	BV-2309 TO BV-2313
BALL VALVE	4"(RB,BW)	BV-2314
BALL VALVE	4"(RB,BW,ES)	BV-2315 TO BV-2316
BALL VALVE	8"(FB,BW)	BV-2317
BALL VALVE	3/4"(FB,SW) LTCS	BV-2318
BALL VALVE	1"(FB,SW) LTCS	BV-2319
PLUG VALVE	2"(BW)	PV-2301
PLUG VALVE	4"(BW,ES)	PV-2302
PLUG VALVE	1"(SW) LTCS	PV-2303
PLUG VALVE	4"(BW) LTCS	PV-2304
QOEC	4" LTCS	QOEC-2301

TAG NUMBERS ASSOCIATED WITH AV VALVES

AV VALVES	ITEM	SIZE	TAG NUMBERS
AV-2102	BALL VALVES	3/4"(FB,SW) 2"(FB,BW)	BV-2131 TO BV-2136 BV-2143 TO BV-2146
AV-2103	BALL VALVES	3/4"(FB,SW) 2"(FB,BW)	BV-2137 TO BV-2142 BV-2147 TO BV-2150

INDRADHANUSH GAS GRID LIMITED

मेकॉन लिमिटेड

MECON LIMITED

REV.NO	DATE	ZONE	DESCRIPTION	BY	VERIFIED
1	18.12.20		GENERAL REVISION	UMAR	AKB
0	26.08.19		AS PER REVISED SCHEMATIC/ GENERAL REVISION	UMAR	AKB
A	10.05.19		FOR COMMENT PURPOSE	UMAR	AKB

REVISION

REFERENCES	DRG.NO.
PIPELINE SCHEMATIC ROUTE DIAGRAM	MEC/23UU/05/28/M/000/0021 , REV – 2, SHEET 8 OF 14

© Copyright MECON LIMITED – All rights reserved.
THIS DRAWING IS THE PROPERTY OF MECON AND ISSUED FOR THE SPECIFIC PROJECT MENTIONED THEREIN. THIS IS NOT TO BE COPIED OR USED FOR OTHER PROJECTS UNLESS EXPRESSLY PERMITTED BY MECON.

SECTION	OIL & GAS
LOCATION	DELHI
DESIGNED	UMAR
DRAWN	UMAR
CHECKED AND VERIFIED	AKB
APPROVED	SIG A. GANGAL
DATE	18.12.20

NORTH EAST GAS GRID (PHASE-1 P/L SECTION)

P & ID FOR SV-01(D) & DISPATCH FACILITY FOR 12"NBX128.311 KMS. P/L TO RT DIMAPUR AT SV-15

SCALE : NTS

DRG. NO. MEC/23UU/05/28/M/001/0010

REV 1

REV / SEC	PIPING	ELEC.	INST.	CONCURRED BY

SECTION-8

DRG. NO. MEC/23UU/05/28/M/001/0012

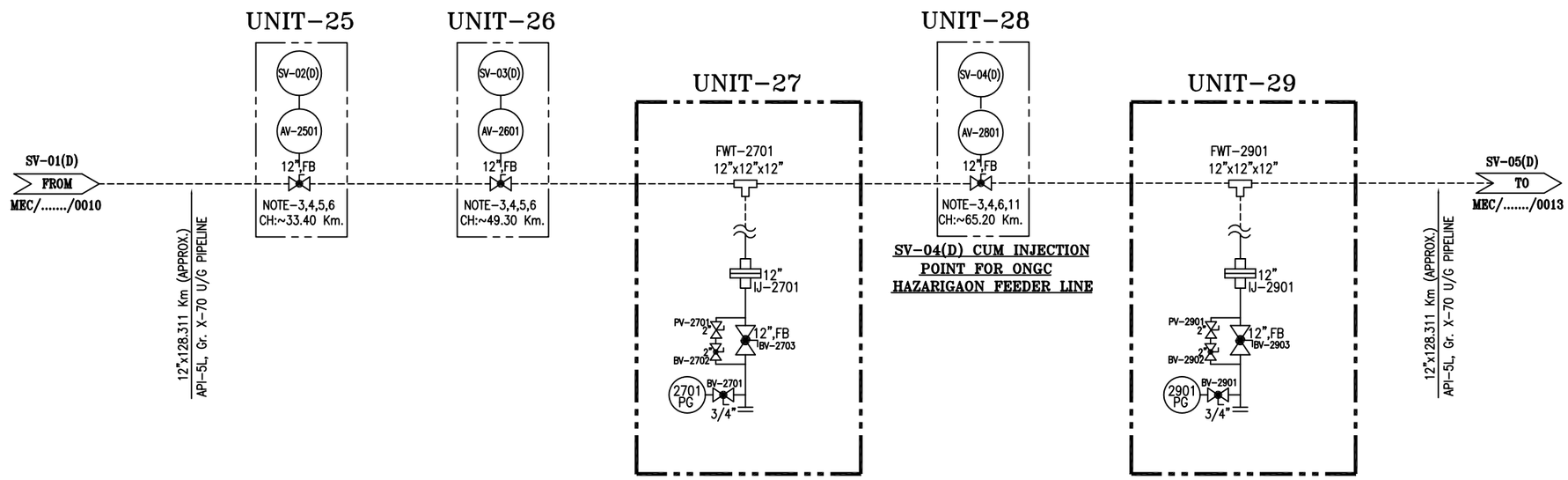

NOTES:

1. ALL VENTS SHALL BE LOCATED MIN. HEIGHT OF 3 MTR. ABOVE THE HIGHEST OPERATING LEVEL.
2. NOTE DELETED.
3. ALL SV ARE EXTENDED STEM, BUTT WELDED END WITH FULLY WELDED BODY & FULL BORE BALL VALVE.
4. BURRIED VALVE SHALL BE PROVIDED WITH CORROSION PROTECTION COATING.
5. FOR SV, HOV & AV DETAIL REFER DRG. NO. MEC/23UU/05/28/M/001/0015, /0016 & /0017.
6. LOCATION OF SV STATIONS AND THEIR CHAINAGES ARE AS PER PIPELINE SCHEMATIC ROUTE DIAGRAM. HOWEVER LOCATIONS OF SV MAY GET SLIGHTLY CHANGED AS PER AVAILABILITY OF PLOT TO M/s IGGL.
7. ALL BALL VALVES WITH BUTT WELDED END SHALL HAVE FULLY WELDED BODY.
8. ALL HIGHEST POINT & LOWEST POINT OF THE STATION PIPING SHALL BE PROVIDED WITH VENT & DRAIN FACILITY & SAME SHALL BE TAKEN CARE DURING PREPARATION OF GAD.
9. NOTE DELETED.
10. SUPPORT SHALL BE PROVIDED BEFORE & AFTER MAINLINE IJ.
11. FOR SV-04(D) DETAIL REFER DRG. NO. MEC/23UU/05/28/M/001/0017.

PROCESS DATA

FLUID: NATURAL GAS(DRY)/RLNG FLOW: – MMSCMD (APPX.) OPER. PRESS.: – KG/CM2(G) DESIGN PRESS.: 92 KG/CM2(G) DESIGN CLASS: 600#	TEMPERATURE WORKING : 0°–55° C DESIGN : –29 TO 65°C

LINE LEGEND

——— PROPOSED LINE A/G
------ PROPOSED LINE U/G

24"–P–01–0101–D1A

- MATERIAL SPEC.
- LINE NO.
- UNIT NO.
- PROCESS FLUID (NG/RLNG)
- LINE SIZE (NOMINAL)

VALVE LEGEND

- BALL VALVE FLANGE END
- BALL VALVE BW END/UPTO 1½" SW END.
- PLUG VALVE BW END/UPTO 1½" SW END.
- PLUG VALVE FLANGE END
- GLOBE VALVE.

TAG NOS. FOR SV-02(D) (UNIT-25)

ITEM	SIZE	TAG NUMBERS
FLOW TEE	12"X12"X8"	FWT-2501
FLOW TEE	12"X12"X6"	FWT-2502 & FWT-2503
IJ	8"	IJ-2501
IJ	4"	IJ-2502
BALL VALVE	3/4"(FB,SW)	BV-2501 TO BV-2508
BALL VALVE	2"(FB,BW)	BV-2509 TO BV-2513
BALL VALVE	4"(RB,BW)	BV-2514
BALL VALVE	4"(RB,BW,ES)	BV-2515 TO BV-2516
BALL VALVE	8"(FB,BW)	BV-2517
BALL VALVE	3/4"(FB,SW) LTCS	BV-2518
BALL VALVE	1"(FB,SW) LTCS	BV-2519
PLUG VALVE	2"(BW)	PV-2501
PLUG VALVE	4"(BW,ES)	PV-2502
PLUG VALVE	1"(SW) LTCS	PV-2503
PLUG VALVE	4"(BW) LTCS	PV-2504
QOEC	4" LTCS	QOEC-2501

TAG NOS. FOR SV-03(D) (UNIT-26)

ITEM	SIZE	TAG NUMBERS
FLOW TEE	12"X12"X8"	FWT-2601
FLOW TEE	12"X12"X6"	FWT-2602 & FWT-2603
IJ	8"	IJ-2601
IJ	4"	IJ-2602
BALL VALVE	3/4"(FB,SW)	BV-2601 TO BV-2608
BALL VALVE	2"(FB,BW)	BV-2609 TO BV-2613
BALL VALVE	4"(RB,BW)	BV-2614
BALL VALVE	4"(RB,BW,ES)	BV-2615 TO BV-2616
BALL VALVE	8"(FB,BW)	BV-2617
BALL VALVE	3/4"(FB,SW) LTCS	BV-2618
BALL VALVE	1"(FB,SW) LTCS	BV-2619
PLUG VALVE	2"(BW)	PV-2601
PLUG VALVE	4"(BW,ES)	PV-2602
PLUG VALVE	1"(SW) LTCS	PV-2603
PLUG VALVE	4"(BW) LTCS	PV-2604
QOEC	4" LTCS	QOEC-2601

TAG NOS. FOR SV-04(D) (UNIT-28)

ITEM	SIZE	TAG NUMBERS
FLOW TEE	12"X12"X12"	FWT-2801
FLOW TEE	12"X12"X6"	FWT-2802 & FWT-2803
IJ	12"	IJ-2801
IJ	4"	IJ-2802
BALL VALVE	3/4"(FB,SW)	BV-2801 TO BV-2809
BALL VALVE	2"(FB,BW)	BV-2810 TO BV-2815
BALL VALVE	4"(RB,BW)	BV-2816
BALL VALVE	4"(RB,BW,ES)	BV-2817 TO BV-2818
BALL VALVE	8"(FB,BW)	BV-2819
BALL VALVE	12"(FB,BW)	BV-2820
BALL VALVE	3/4"(FB,SW) LTCS	BV-2821
BALL VALVE	1"(FB,SW) LTCS	BV-2822
PLUG VALVE	2"(BW)	PV-2801 TO PV-2802
PLUG VALVE	4"(BW,ES)	PV-2803
PLUG VALVE	1"(SW) LTCS	PV-2804
PLUG VALVE	4"(BW) LTCS	PV-2805
QOEC	4" LTCS	QOEC-2801

INDRADHANUSH GAS GRID LIMITED

मेकॉन लिमिटेड

MECON LIMITED

REV.NO	DATE	ZONE	DESCRIPTION	BY	VERIFIED
1	18.12.20		GENERAL REVISION	UMAR	AKB
0	26.08.19		AS PER REVISED SCHEMATIC/ GENERAL REVISION	UMAR	AKB
A	10.05.19		FOR COMMENT PURPOSE	UMAR	AKB

REVISION

PIPELINE SCHEMATIC ROUTE DIAGRAM	MEC/23UU/05/28/M/000/0021 , REV – 2, SHEET 8 OF 14
REFERENCES	DRG.NO.

© Copyright MECON LIMITED – All rights reserved.

THIS DRAWING IS THE PROPERTY OF MECON AND ISSUED FOR THE SPECIFIC PROJECT MENTIONED THEREIN. THIS IS NOT TO BE COPIED OR USED FOR OTHER PROJECTS UNLESS EXPRESSLY PERMITTED BY MECON.

SECTION	OIL & GAS
LOCATION	DELHI
DESIGNED	UMAR
DRAWN	UMAR
CHECKED AND VERIFIED	AKB
APPROVED	SIG A. GANGAL
DATE	18.12.20

NORTH EAST GAS GRID (PHASE–1 P/L SECTION)

P & ID FOR SV STATIONS & INJECTION POINTS FOR ONGC FEEDER LINES ALONG 12"NB x 128.311 KMS. (APPX.) P/L

SCALE : NTS

DRG. NO. MEC/23UU/05/28/M/001/0012 REV 1

SECTION–8

REV / SEC	PIPING	ELEC.	INST.
	CONCURRED BY		

DRG. NO. MEC/23UU/05/28/M/001/0013

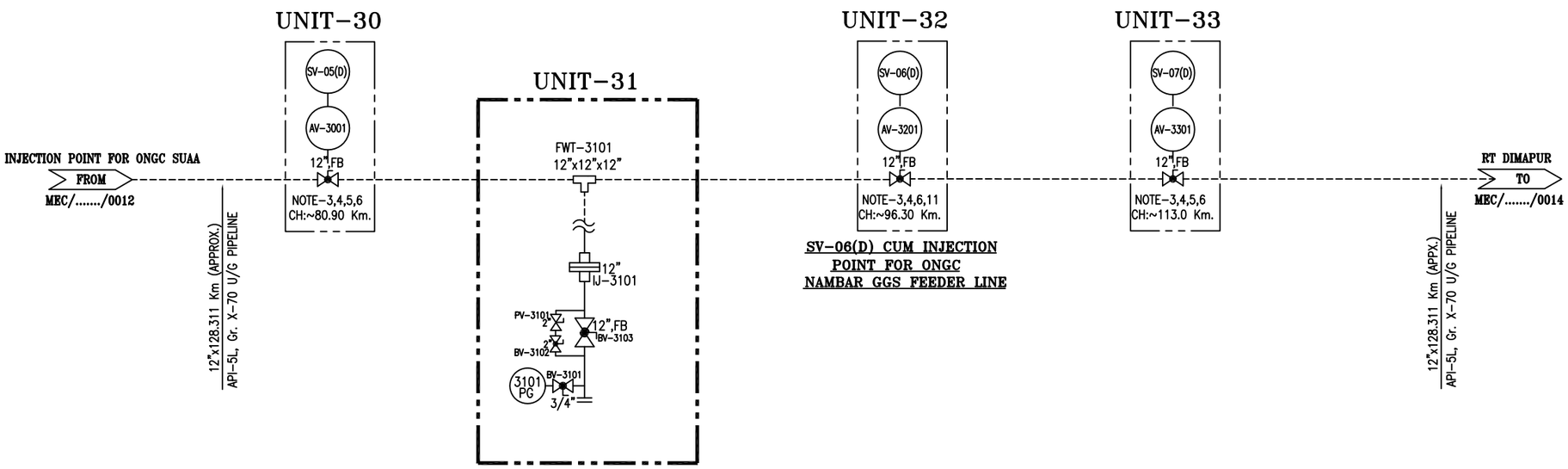

TAG NOS. FOR SV-05(D) (UNIT-30)		
ITEM	SIZE	TAG NUMBERS
FLOW TEE	12"X12"X8"	FWT-3001
FLOW TEE	12"X12"X6"	FWT-3002 & FWT-3003
IJ	8"	IJ-3001
IJ	4"	IJ-3002
BALL VALVE	3/4"(FB,SW)	BV-3001 TO BV-3008
BALL VALVE	2"(FB,BW)	BV-3009 TO BV-3013
BALL VALVE	4"(RB,BW)	BV-3014
BALL VALVE	4"(RB,BW,ES)	BV-3015 TO BV-3016
BALL VALVE	8"(FB,BW)	BV-3017
BALL VALVE	3/4"(FB,SW) LTCS	BV-3018
BALL VALVE	1"(FB,SW) LTCS	BV-3019
PLUG VALVE	2"(BW)	PV-3001
PLUG VALVE	4"(BW,ES)	PV-3002
PLUG VALVE	1"(SW) LTCS	PV-3003
PLUG VALVE	4"(BW) LTCS	PV-3004
QOEC	4" LTCS	QOEC-3001

TAG NOS. FOR SV-06(D) (UNIT-32)		
ITEM	SIZE	TAG NUMBERS
FLOW TEE	12"X12"X12"	FWT-3201
FLOW TEE	12"X12"X6"	FWT-3202 & FWT-3203
IJ	12"	IJ-3201
IJ	4"	IJ-3202
BALL VALVE	3/4"(FB,SW)	BV-3201 TO BV-3209
BALL VALVE	2"(FB,BW)	BV-3210 TO BV-3215
BALL VALVE	4"(RB,BW)	BV-3216
BALL VALVE	4"(RB,BW,ES)	BV-3217 TO BV-3218
BALL VALVE	8"(FB,BW)	BV-3219
BALL VALVE	12"(FB,BW)	BV-3220
BALL VALVE	3/4"(FB,SW) LTCS	BV-3221
BALL VALVE	1"(FB,SW) LTCS	BV-3222
PLUG VALVE	2"(BW)	PV-3201 TO PV-3202
PLUG VALVE	4"(BW,ES)	PV-3203
PLUG VALVE	1"(SW) LTCS	PV-3204
PLUG VALVE	4"(BW) LTCS	PV-3205
QOEC	4" LTCS	QOEC-3201

TAG NOS. FOR SV-07(D) (UNIT-33)		
ITEM	SIZE	TAG NUMBERS
FLOW TEE	12"X12"X8"	FWT-3301
FLOW TEE	12"X12"X6"	FWT-3302 & FWT-3303
IJ	8"	IJ-3301
IJ	4"	IJ-3302
BALL VALVE	3/4"(FB,SW)	BV-3301 TO BV-3308
BALL VALVE	2"(FB,BW)	BV-3309 TO BV-3313
BALL VALVE	4"(RB,BW)	BV-3314
BALL VALVE	4"(RB,BW,ES)	BV-3315 TO BV-3316
BALL VALVE	8"(FB,BW)	BV-3317
BALL VALVE	3/4"(FB,SW) LTCS	BV-3318
BALL VALVE	1"(FB,SW) LTCS	BV-3319
PLUG VALVE	2"(BW)	PV-3301
PLUG VALVE	4"(BW,ES)	PV-3302
PLUG VALVE	1"(SW) LTCS	PV-3303
PLUG VALVE	4"(BW) LTCS	PV-3304
QOEC	4" LTCS	QOEC-3301

NOTES:

1. ALL VENTS SHALL BE LOCATED MIN. HEIGHT OF 3 MTR. ABOVE THE HIGHEST OPERATING LEVEL.
2. NOTE DELETED.
3. ALL SV ARE EXTENDED STEM, BUTT WELDED END WITH FULLY WELDED BODY & FULL BORE BALL VALVE.
4. BURRIED VALVE SHALL BE PROVIDED WITH CORROSION PROTECTION COATING.
5. FOR SV, HOV & AV DETAIL REFER DRG. NO. MEC/23UU/05/28/M/001/0015, /0016 & /0017.
6. LOCATION OF SV STATIONS AND THEIR CHAINAGES ARE AS PER PIPELINE SCHEMATIC ROUTE DIAGRAM. HOWEVER LOCATIONS OF SV MAY GET SLIGHTLY CHANGED AS PER AVAILABILITY OF PLOT TO M/s IGGL.
7. ALL BALL VALVES WITH BUTT WELDED END SHALL HAVE FULLY WELDED BODY.
8. ALL HIGHEST POINT & LOWEST POINT OF THE STATION PIPING SHALL BE PROVIDED WITH VENT & DRAIN FACILITY & SAME SHALL BE TAKEN CARE DURING PREPARATION OF GAD.
9. NOTE DELETED.
10. SUPPORT SHALL BE PROVIDED BEFORE & AFTER MAINLINE IJ.
11. FOR SV-06(D) DETAIL REFER DRG. NO. MEC/23UU/05/28/M/001/0017.

PROCESS DATA

FLUID: NATURAL GAS(DRY)/RLNG
FLOW: – MMSCMD (APPX.)
OPER. PRESS.: – KG/CM2(G)
DESIGN PRESS.: 92 KG/CM2(G)
DESIGN CLASS: 600#

TEMPERATURE
WORKING : 0°–55° C
DESIGN : –29 TO 65°C

LINE LEGEND

PROPOSED LINE A/G
PROPOSED LINE U/G

24"–P–01–0101–D1A

MATERIAL SPEC.
LINE NO.
UNIT NO.
PROCESS FLUID (NG/RLNG)
LINE SIZE (NOMINAL)

VALVE LEGEND

BALL VALVE FLANGE END
BALL VALVE BW END/UPTO 1½" SW END.
PLUG VALVE BW END/UPTO 1½" SW END.
PLUG VALVE FLANGE END
GLOBE VALVE.

INDRADHANUSH GAS GRID LIMITED

मेकॉन लिमिटेड

MECON LIMITED

REV	DATE	ZONE	DESCRIPTION	BY	VERIFIED
1	18.12.20		GENERAL REVISION	UMAR	AKB
0	26.08.19		AS PER REVISED SCHEMATIC/ GENERAL REVISION	UMAR	AKB
A	10.05.19		FOR COMMENT PURPOSE	UMAR	AKB

REVISION

PIPELINE SCHEMATIC ROUTE DIAGRAM — MEC/23UU/05/28/M/000/0021, REV – 2, SHEET 8 OF 14

REFERENCES — DRG.NO.

© Copyright MECON LIMITED – All rights reserved.

THIS DRAWING IS THE PROPERTY OF MECON AND ISSUED FOR THE SPECIFIC PROJECT MENTIONED THEREIN. THIS IS NOT TO BE COPIED OR USED FOR OTHER PROJECTS UNLESS EXPRESSLY PERMITTED BY MECON.

REV / SEC					
	PIPING				
	ELEC.				
	INST.				
	CONCURRED BY				

SECTION–8

SECTION	OIL & GAS
LOCATION	DELHI
DESIGNED	UMAR
DRAWN	UMAR
CHECKED AND VERIFIED	AKB
APPROVED	SIG A. GANGAL
DATE	18.12.20

NORTH EAST GAS GRID (PHASE–1 P/L SECTION)

P & ID FOR SV STATIONS & INJECTION POINTS FOR ONGC FEEDER LINE ALONG 12"NB x 128.311 KMS. (APPX.) P/L

SCALE : NTS

DRG. NO. MEC/23UU/05/28/M/001/0013 — REV 1

DRG. NO. MEC/23UU/05/28/M/001/0014

UNIT-34

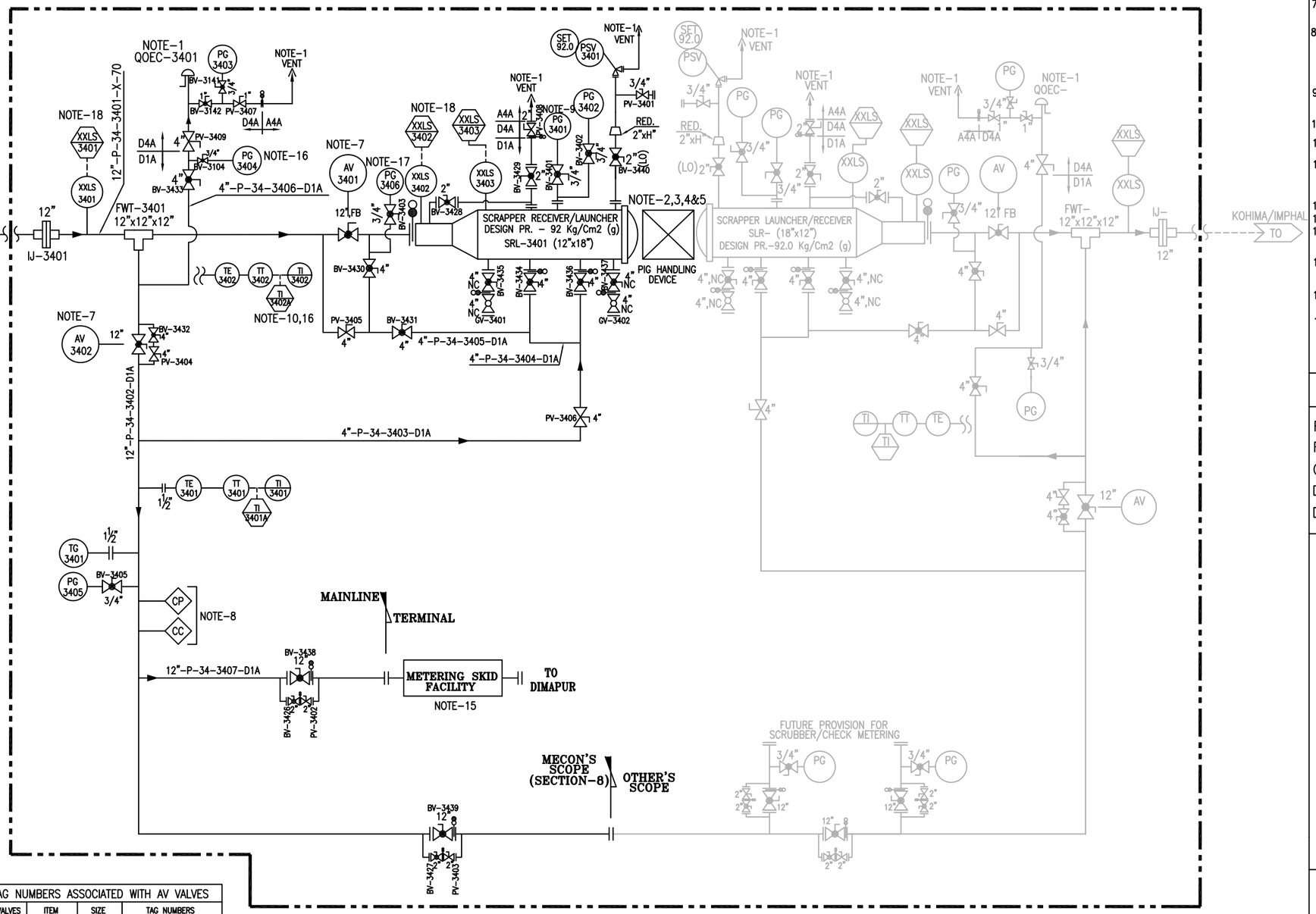

TAG NUMBERS ASSOCIATED WITH AV VALVES			
AV VALVES	ITEM	SIZE	TAG NUMBERS
AV-3401	BALL VALVES	3/4"(FB,SW) 2"(FB,BW)	BV-3406 TO BV-3411 BV-3418 TO BV-3421
AV-3402	BALL VALVES	3/4"(FB,SW) 2"(FB,BW)	BV-3412 TO BV-3417 BV-3422 TO BV-3425

RECEIVING TERMINAL CUM FUTURE IPS AT DIMAPUR
CH. 128.311 KMS. (APPROX) FROM SV-15 CUM DT FOR DIMAPUR

NOTES:

1. ALL VENTS SHALL BE LOCATED MIN. HEIGHT OF 3 MTR. ABOVE THE HIGHEST OPERATING LEVEL.
2. SCRAPPER LAUNCHER/RECEIVER SHALL HAVE SCRAPPER HANDLING FACILITY.
3. SCRAPPER LAUNCHER/RECEIVER SHALL BE SUITABLE FOR HANDLING INTELLIGENT PIGS.
4. SCRAPPER LAUNCHER/RECEIVER SHALL HAVE QUICK OPPENING CLOSURE.
5. SCRAPPER DOOR MECHANISM TO BE CONSTRUCTED SUCH THAT THE DOOR CAN NOT BE OPENED UNLESS SCRAPPER TRAP IS FULLY DEPRESSURISED.
6. GAS DETECTORS TO BE PROVIDED NEAR FILTERS, FLOW METERS & SCRAPPER TRAPS. SIGNAL FROM GAS DETECTOR TO BE TAKEN IN CONTROL ROOM.
7. FOR SV, HOV & AV DETAIL REFER DRG. NO. MEC/23UU/05/28/M/001/0015, /0016 & /0017.
8. ONLINE RETRIVEL TYPE CORROSION MONITORING COUPON AND CORROSION PROBE SHALL BE PROVIDED. FURTHER WHEREVER SCADA SYSTEM ARE AVAILABLE, THIS SYSTEM SHALL BE ONLINE SCADA COMPATIBLE OTHERWISE DATA SHALL BE COLLECTED BY OFFLINE DATA LOGGER.
9. PG-3401 SHALL HAVE A RANGE OF 0-1 KG/CM2(g) WITH A GAUGE SAVER.
10. DIRECT SURFACE CONTACT TYPE.
11. ALL BALL VALVES WITH BUTT WELDED END SHALL HAVE FULLY WELDED BODY.
12. ALL HIGHEST POINT & LOWEST POINT OF THE STATION PIPING SHALL BE PROVIDED WITH VENT & DRAIN FACILITY & SAME SHALL BE TAKEN CARE DURING PREPARATION OF GAD.
13. NOTE DELETED.
14. SUPPORT SHALL BE PROVIDED BEFORE & AFTER MAINLINE IJ.
15. CUSTODY TRANSFER METERING SKID P&ID SHALL BE PROVIDED SEPARATELY AFTER GETTING RELEVANT PROCESS PARAMETERS.
16. DEPRESSURIZATION VALVE SHALL BE LOCATED IN SUCH A WAY THAT PG-3404 & TI-3402 CAN BE READ DURING VENTING. 1" VALVE ON VENT LINE OF THE QOEC LINE SHALL BE APPROCHABLE FOR OPERATION.
17. PG-3406 SHALL HAVE A RANGE OF 0-5 KG/CM2(G) WITH A GAUGE SAVER & LEAST COUNT OF 0.1 KG/CM2(G).
18. ALL PIG SIGNALLER SHALL BE OF NON-INTRUSIVE TYPE.

PROCESS DATA

FLUID: NATURAL GAS(DRY)/RLNG
FLOW: - MMSCMD (APPX.)
OPER. PRESS.: - KG/CM2(G)
DESIGN PRESS.: 92 KG/CM2(G)
DESIGN CLASS: 600#

TEMPERATURE
WORKING : 0°-55° C
DESIGN : -29 TO 65°C

LINE LEGEND

PROPOSED LINE A/G
PROPOSED LINE U/G
LINE A/G (OTHER'S SCOPE)
LINE U/G (OTHER'S SCOPE)

12"-P-15-1501-D1A
MATERIAL SPEC.
LINE NO.
UNIT NO.
PROCESS FLUID (NG/RLNG)
LINE SIZE (NOMINAL)

VALVE LEGEND

BALL VALVE FLANGE END
BALL VALVE BW END/UPTO 1½" SW END.
PLUG VALVE BW END/UPTO 1½" SW END.
PLUG VALVE FLANGE END
GLOBE VALVE.

INDRADHANUSH GAS GRID LIMITED
मेकॉन लिमिटेड
MECON LIMITED

REV	DATE	ZONE	DESCRIPTION	BY	VERIFIED
1	18.12.20		GENERAL REVISION	UMAR	AKB
0	26.08.19		AS PER REVISED SCHEMATIC/ GENERAL REVISION	UMAR	AKB
A	10.05.19		FOR COMMENT PURPOSE	UMAR	AKB

PIPELINE SCHEMATIC ROUTE DIAGRAM — MEC/23UU/05/28/M/000/0021, REV - 2, SHEET 8 OF 14

REFERENCES — DRG.NO.

© Copyright MECON LIMITED - All rights reserved.
THIS DRAWING IS THE PROPERTY OF MECON AND ISSUED FOR THE SPECIFIC PROJECT MENTIONED THEREIN. THIS IS NOT TO BE COPIED OR USED FOR OTHER PROJECTS UNLESS EXPRESSLY PERMITTED BY MECON.

SECTION	OIL & GAS
LOCATION	DELHI
DESIGNED	UMAR
DRAWN	UMAR
CHECKED AND VERIFIED	AKB
APPROVED	A. GANGAL
DATE	18.12.20

NORTH EAST GAS GRID (PHASE-1 P/L SECTION)

P&ID FOR RECEIVING TERMINAL CUM FUTURE IPS FOR 12"NBx128.311 KMS. P/L AT DIMAPUR

SCALE : NTS
DRG. NO. MEC/23UU/05/28/M/001/0014
REV 1

REV / SEC	PIPING	ELEC.	INST.	CONCURRED BY

SECTION-8

DRG. NO. MEC/23UU/05/28/M/001/0015

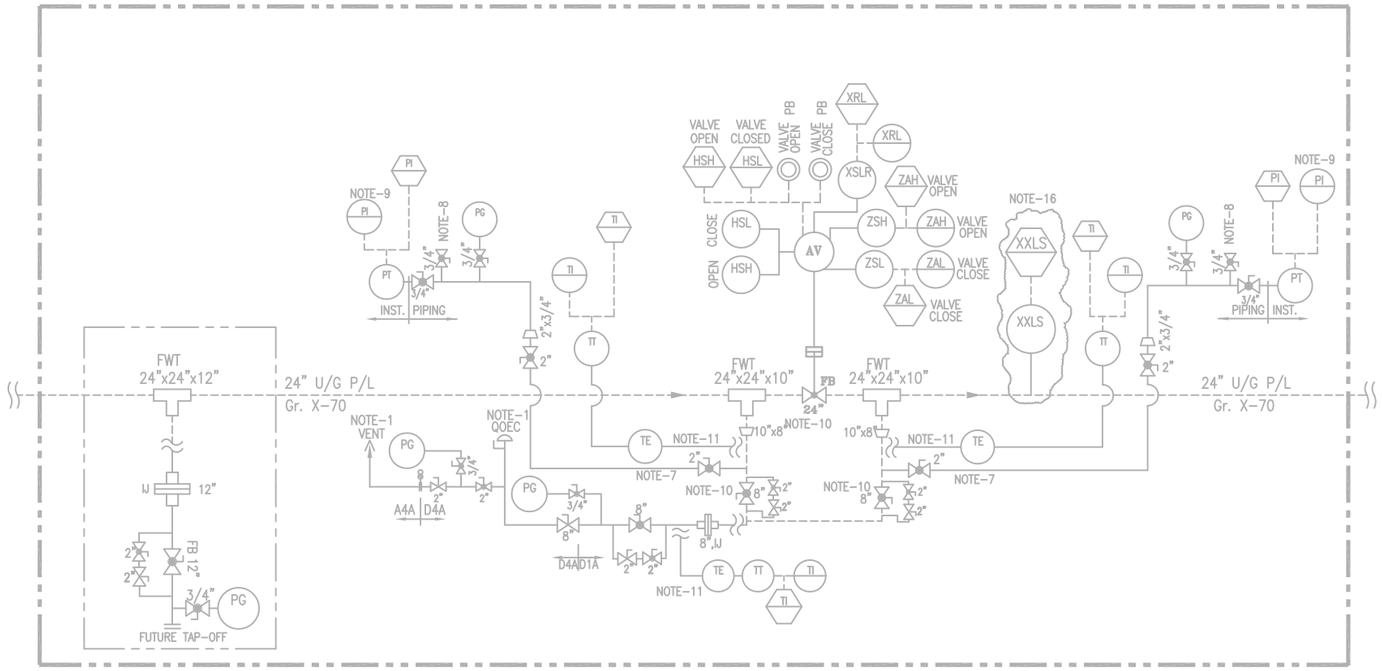

TYPICAL ARRANGEMENT FOR 24" SV (REMOTE OPERATED)

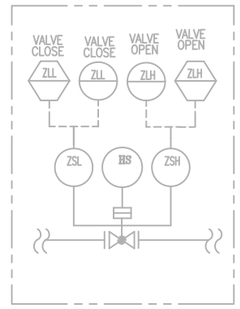

TYPICAL HOV ARRANGEMENT

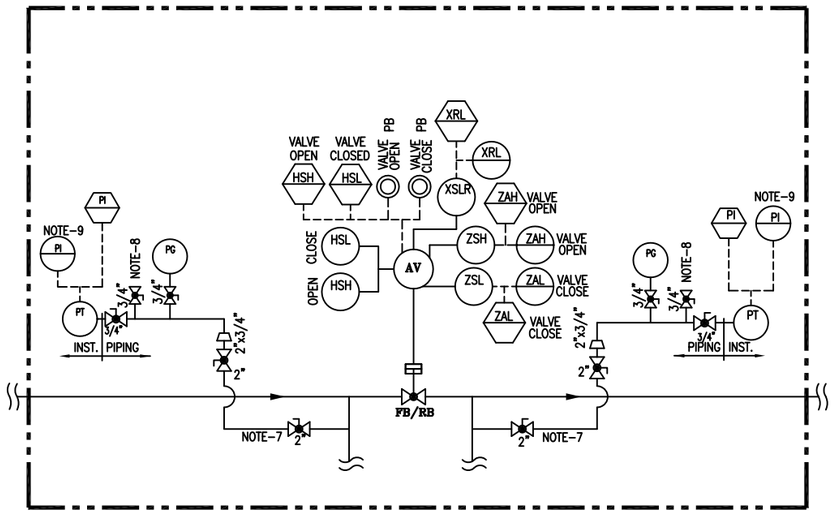

TYPICAL ARRANGEMENT FOR AV

NOTE:-

1. NOTE DELETED.
2. NOTE DELETED.
3. ALL AV (ACTUATED VALVES) SHALL BE FAILED TO STAY PUT TYPE VALVE.
4. NOTE DELETED.
5. NOTE DELETED.
6. NOTE DELETED.
7. ALL PG, PT CONNECTION SHALL BE TAKEN FROM 2" TWO ISOLATION VALVES AND THEN AFTER IT SHOULD BE CONVERTED TO REQUIRE NPT CONNECTION.
8. GAS TAPPING FOR VALVE ACTUATOR.
9. FOR PG & PT DETAIL REFER MECON STANDARD DRG.
10. NOTE DELETED.
11. NOTE DELETED.
12. ALL BALL VALVES WITH BUTT WELDED END SHALL HAVE FULLY WELDED BODY.
13. ALL HIGHEST POINT & LOWEST POINT OF THE STATION PIPING SHALL BE PROVIDED WITH VENT & DRAIN FACILITY & SAME SHALL BE TAKEN CARE DURING PREPARATION OF GAD.
14. NOTE DELETED.
15. NOTE DELETED.
16. NOTE DELETED.

LINE LEGEND

- PROPOSED LINE A/G
- PROPOSED LINE U/G
- LINE A/G (OTHER'S SCOPE)
- LINE U/G (OTHER'S SCOPE)

VALVE LEGEND

- BALL VALVE FLANGE END
- BALL VALVE BW END/UPTO 1½" SW END.
- PLUG VALVE BW END/UPTO 1½" SW END.
- PLUG VALVE FLANGE END
- GLOBE VALVE.

INDRADHANUSH GAS GRID LIMITED

मेकॉन लिमिटेड

MECON LIMITED

REV	DATE	ZONE	DESCRIPTION	BY	VERIFIED
1	18.12.20		GENERAL REVISION	UMAR	AKB
0	26.08.19		AS PER REVISED SCHEMATIC/ GENERAL REVISION	UMAR	AKB
A	10.05.19		FOR COMMENT PURPOSE	UMAR	AKB

REVISION

PIPELINE SCHEMATIC ROUTE DIAGRAM	MEC/23UU/05/28/M/000/0021 , REV – 2, SHEET 8 OF 14
REFERENCES	DRG.NO.

© Copyright MECON LIMITED – All rights reserved.
THIS DRAWING IS THE PROPERTY OF MECON AND ISSUED FOR THE SPECIFIC PROJECT MENTIONED THEREIN. THIS IS NOT TO BE COPIED OR USED FOR OTHER PROJECTS UNLESS EXPRESSLY PERMITTED BY MECON.

SECTION	OIL & GAS
LOCATION	DELHI
DESIGNED	UMAR
DRAWN	UMAR
CHECKED AND VERIFIED	AKB
APPROVED SIG	A. GANGAL
DATE	18.12.20

NORTH EAST GAS GRID (PHASE-1 P/L SECTION)

TYPICAL ARRANGEMENT FOR AV

SCALE : NTS

DRG. NO. MEC/23UU/05/28/M/001/0015

REV 1

REV / SEC	PIPING	ELEC.	INST.	CONCURRED BY

SECTION-8

DRG. NO. MEC/23UU/05/28/M/001/0016

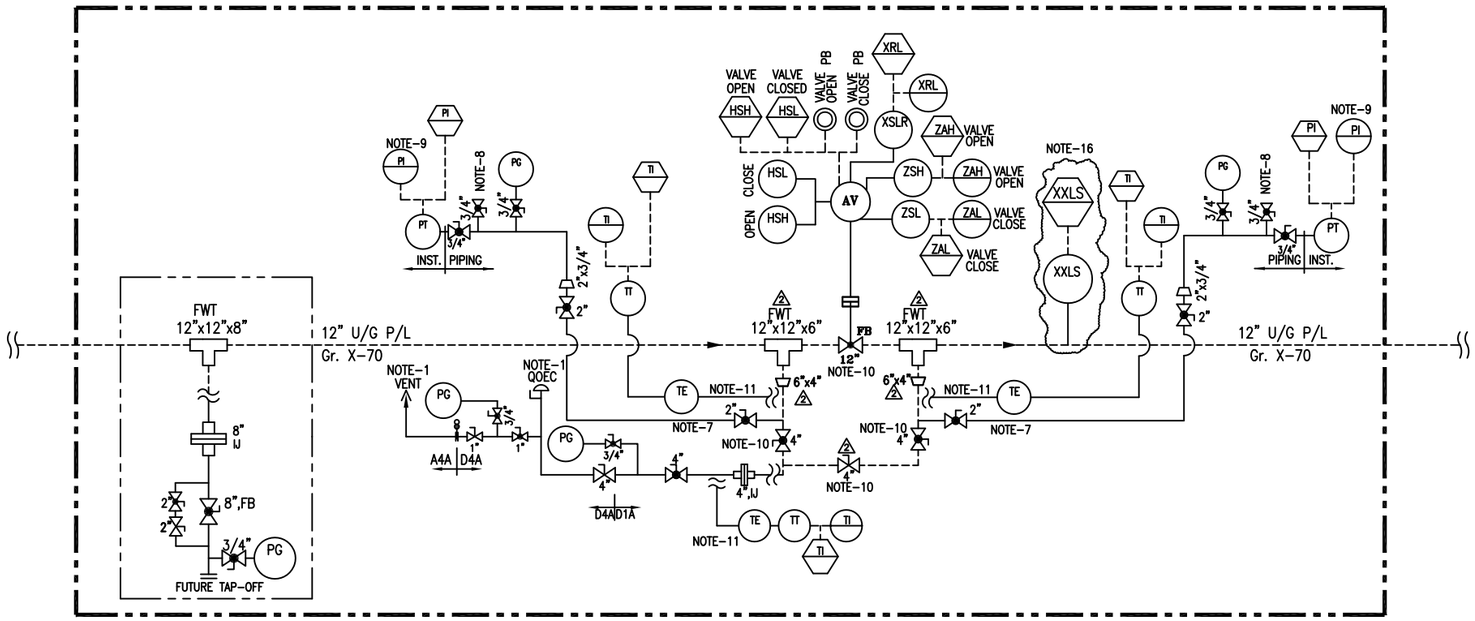

TYPICAL ARRANGEMENT FOR 12" SV (REMOTE OPERATED)

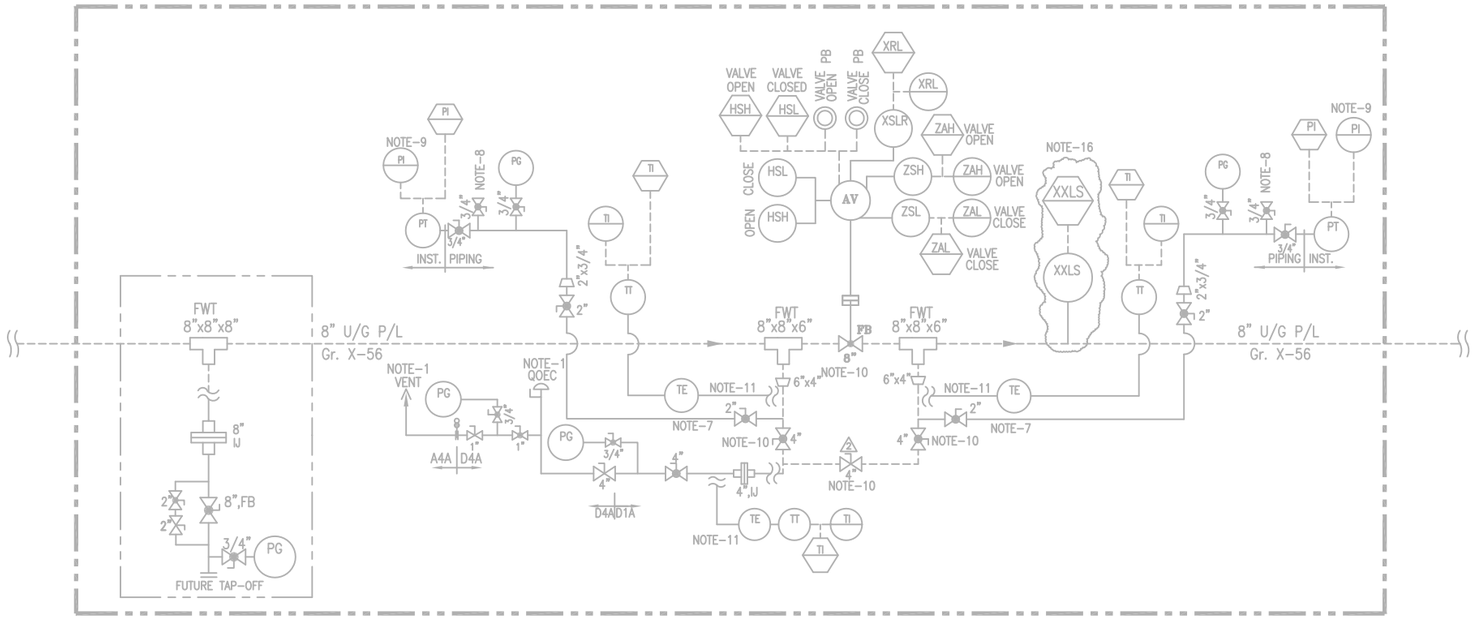

TYPICAL ARRANGEMENT FOR 8" SV (REMOTE OPERATED)

NOTE:-

1. ALL VENT SHALL BE LOCATED MIN. HEIGHT OF 3 MTR. ABOVE THE HIGHEST OPERATING LEVEL.
2. NOTE DELETED.
3. ALL AV (ACTUATED VALVES) SHALL BE FAILED TO STAY PUT TYPE VALVE.
4. NOTE DELETED.
5. NOTE DELETED.
6. NOTE DELETED.
7. ALL PG, PT CONNECTION SHALL BE TAKEN FROM 2" TWO ISOLATION VALVES AND THEN AFTER IT SHOULD BE CONVERTED TO REQUIRE NPT CONNECTION.
8. GAS TAPPING FOR VALVE ACTUATOR.
9. FOR PG & PT DETAIL REFER MECON STANDARD DRG.
10. EXTENDED STEM VALVE.
11. DIRECT SURFACE CONTACT TYPE.
12. ALL BALL VALVES WITH BUTT WELDED END SHALL HAVE FULLY WELDED BODY.
13. ALL HIGHEST POINT & LOWEST POINT OF THE STATION PIPING SHALL BE PROVIDED WITH VENT & DRAIN FACILITY & SAME SHALL BE TAKEN CARE DURING PREPARATION OF GAD.
14. NOTE DELETED.
15. SUPPORT SHALL BE PROVIDED BEFORE & AFTER MAINLINE IJ.
16. NON-INTRUSIVE TYPE PIG SIGNALLER TO BE INSTALLED AT FIRST & LAST SV STATION BEFORE EACH INTERMEDIATE PIGGING STATION/RECEIVING STATION.

LINE LEGEND

- PROPOSED LINE A/G
- PROPOSED LINE U/G
- LINE A/G (OTHER'S SCOPE)
- LINE U/G (OTHER'S SCOPE)

VALVE LEGEND

- BALL VALVE FLANGE END
- BALL VALVE BW END/UPTO 1½" SW END.
- PLUG VALVE BW END/UPTO 1½" SW END.
- PLUG VALVE FLANGE END
- GLOBE VALVE.

INDRADHANUSH GAS GRID LIMITED

मेकॉन लिमिटेड

MECON LIMITED

REV	DATE	ZONE	DESCRIPTION	BY	VERIFIED
2	18.12.20		AS PER REQUIREMENT	UMAR	AKB
1	18.03.20		AS PER REVISED SCHEMATIC/ GENERAL REVISION	RASHMI	AKB
0	26.08.19		AS PER REVISED SCHEMATIC/ GENERAL REVISION	UMAR	AKB
A	10.05.19		FOR COMMENT PURPOSE	UMAR	AKB

REVISION

REFERENCES	DRG.NO.
PIPELINE SCHEMATIC ROUTE DIAGRAM	MEC/23UU/05/28/M/000/0021 , REV – 2, SHEET 8 OF 14

© Copyright MECON LIMITED – All rights reserved.
THIS DRAWING IS THE PROPERTY OF MECON AND ISSUED FOR THE SPECIFIC PROJECT MENTIONED THEREIN. THIS IS NOT TO BE COPIED OR USED FOR OTHER PROJECTS UNLESS EXPRESSLY PERMITTED BY MECON.

SECTION	OIL & GAS
LOCATION	DELHI
DESIGNED	UMAR
DRAWN	UMAR
CHECKED AND VERIFIED	AKB
APPROVED	SIG A. GANGAL
DATE	18.12.20

NORTH EAST GAS GRID (PHASE-1 P/L SECTION)

TYPICAL ARRANGEMENT FOR 12"SV STATION (REMOTE OPERATED)

SCALE : NTS

DRG. NO. MEC/23UU/05/28/M/001/0016

REV 2

REV / SEC	PIPING	ELEC.	INST.	CONCURRED BY

SECTION-8

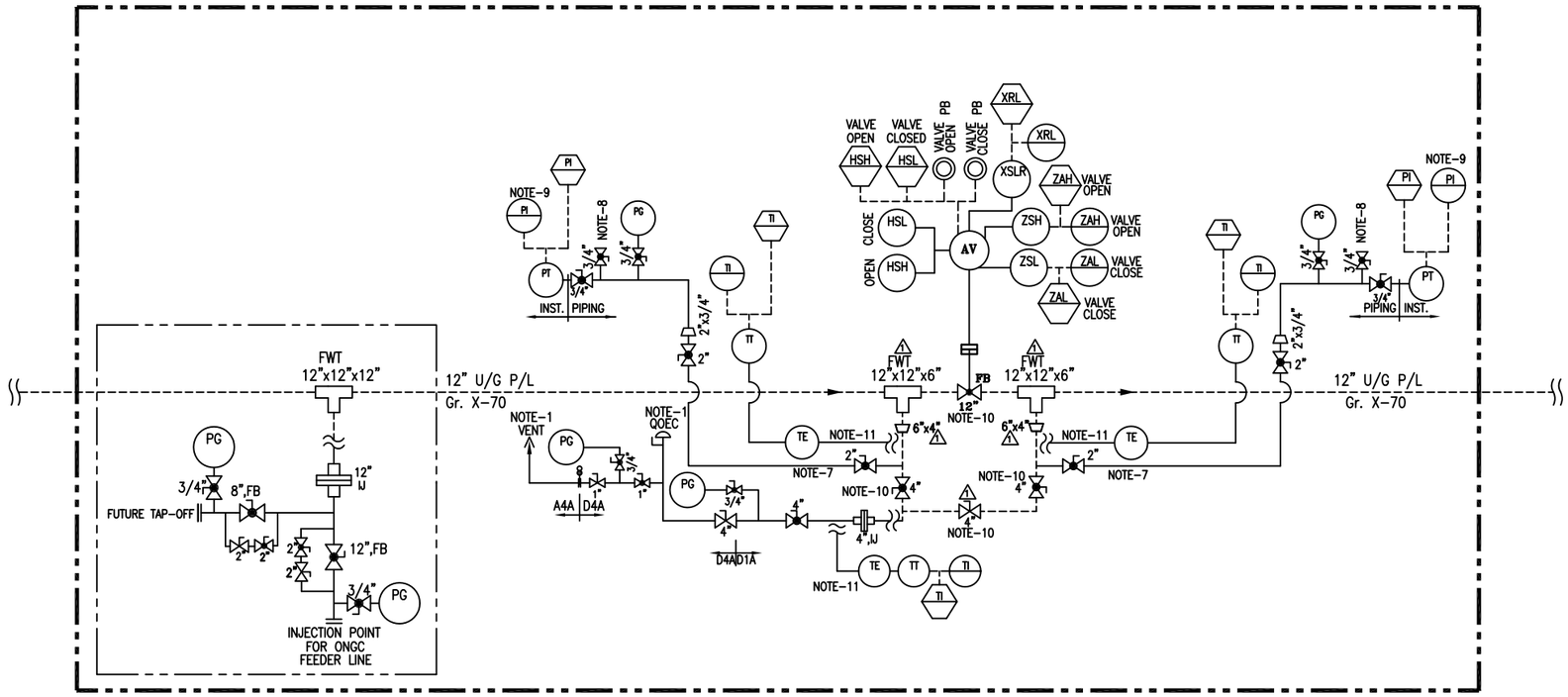

TYPICAL ARRANGEMENT FOR SV-04(D) & SV-06(D) (REMOTE OPERATED)

NOTE:-

1. ALL VENT SHALL BE LOCATED MIN. HEIGHT OF 3 MTR. ABOVE THE HIGHEST OPERATING LEVEL.
2. NOTE DELETED.
3. ALL AV (ACTUATED VALVES) SHALL BE FAILED TO STAY PUT TYPE VALVE.
4. NOTE DELETED.
5. NOTE DELETED.
6. NOTE DELETED.
7. ALL PG, PT CONNECTION SHALL BE TAKEN FROM 2" TWO ISOLATION VALVES AND THEN AFTER IT SHOULD BE CONVERTED TO REQUIRE NPT CONNECTION.
8. GAS TAPPING FOR VALVE ACTUATOR.
9. FOR PG & PT DETAIL REFER MECON STANDARD DRG.
10. EXTENDED STEM VALVE.
11. DIRECT SURFACE CONTACT TYPE.
12. ALL BALL VALVES WITH BUTT WELDED END SHALL HAVE FULLY WELDED BODY.
13. ALL HIGHEST POINT & LOWEST POINT OF THE STATION PIPING SHALL BE PROVIDED WITH VENT & DRAIN FACILITY & SAME SHALL BE TAKEN CARE DURING PREPARATION OF GAD.
14. NOTE DELETED.
15. SUPPORT SHALL BE PROVIDED BEFORE & AFTER MAINLINE IJ.

LINE LEGEND

PROPOSED LINE A/G
PROPOSED LINE U/G

VALVE LEGEND

BALL VALVE FLANGE END
BALL VALVE BW END/UPTO 1½" SW END.
PLUG VALVE BW END/UPTO 1½" SW END.
PLUG VALVE FLANGE END
GLOBE VALVE.

INDRADHANUSH GAS GRID LIMITED

मेकॉन लिमिटेड

MECON LIMITED

REV	DATE	ZONE	DESCRIPTION	BY	VERIFIED
1	18.12.20		AS PER REQUIREMENT	UMAR	AKB
0	26.08.19		AS PER REVISED SCHEMATIC/ GENERAL REVISION	UMAR	AKB
A	10.05.19		FOR COMMENT PURPOSE	UMAR	AKB

REVISION

REFERENCES	DRG.NO.
PIPELINE SCHEMATIC ROUTE DIAGRAM	MEC/23UU/05/28/M/000/0021 , REV – 2, SHEET 8 OF 14

© Copyright MECON LIMITED – All rights reserved.
THIS DRAWING IS THE PROPERTY OF MECON AND ISSUED FOR THE SPECIFIC PROJECT MENTIONED THEREIN. THIS IS NOT TO BE COPIED OR USED FOR OTHER PROJECTS UNLESS EXPRESSLY PERMITTED BY MECON.

SECTION	OIL & GAS
LOCATION	DELHI
DESIGNED	UMAR
DRAWN	UMAR
CHECKED AND VERIFIED	AKB
APPROVED	SIG A. GANGAL
DATE	18.12.20

NORTH EAST GAS GRID (PHASE-1 P/L SECTION)

P&ID FOR SV-04(D) CUM INJECTION POINT (RT) FOR ONGC HAZARIGAON FEEDER LINE & SV-06(D) CUM INJECTION POINT FOR ONGC NAMBAR CGS FEEDER LINE

SCALE : NTS

DRG. NO. MEC/23UU/05/28/M/001/0017

REV 1

SECTION-8

REV / SEC	12	11	10	9	8	7	6	5	4	3
	PIPING									
	ELEC.									
	INST.									
	CONCURRED BY									

SYMBOLS & ABBREVIATIONS

SYMBOLS

- VP–PLUG VALVE
- VB–BALL VALVE WELDED END
- VB–BALL VALVE FLANGED END
- GATE VALVE
- GV–GLOBE VALVE
- PRESSURE RELIEF OR SAFETY VALVE (PSV)
- PRESSURE REGULATING VALVE (PCV) (SELF ACTUATING TYPE)
- NON RETURN VALVE
- CONTROL VALVE WITH SLAM SHUT–OFF VALVE
- SOLENOID VALVE
- GAS ACTUATED ISOLATION VALVE
- GAS ACTUATED ISOLATION VALVE WITH HANDWHEEL
- REDUCER
- FLANGE
- FLAME ARRESTOR (FA)
- RTU — REMOTE TERMINAL UNIT
- DIAPHRAM
- XXLS — PIG SIGNALLER
- VENT
- SPECTACLE BLIND

SYMBOLS

- PD METER
- TURBINE METER
- INSULATION JOINT (IJ)
- FLOW TEE (FWT)
- FIELD MOUNTED INSTRUMENT
- CONTROL PANEL MOUNTED INSTRUMENT
- ULTRASONIC METER
- SCADA INDICATOR, CONTROLLER OR OTHER DEVICES WITH OPERATOR ACCESS TO ADJUSTMENT.

ABBREVIATIONS

AE	ANALYZER SENSOR (GAS CHROMATOGRAPH)
AI	ANALYZER INDICATOR
AT	ANALYZER TRANSMITTER
FY	FLOW COMPUTER
FQI	FLOW TOTALIZER & INDICATOR
LG	LEVEL GAUGE
ZSH/ZSL	LIMIT SWITCHES (OPEN/CLOSE)
TI/TG	TEMPERATURE INDICATOR/ GAUGE
TE	TEMPERATURE ELEMENT
TW	THERMOWELL
DPI/DPG	DIFF. PRESSURE INDICATOR/ GAUGE
DPT	DIFF. PRESSURE TRANSMITTER
PI/PG	PRESSURE INDICATOR/ GAUGE
PT	PRESSURE TRANSMITTER
FC/FO	FAILURE TO CLOSE/OPEN
LO	LOCK OPEN
FIC/PIC	FLOW/PRESS. INDICATING CONTROLLER
I	INTERLOCK
XRL	LOCAL/REMOTE INDICATION
XSL	LOCAL/REMOTE SWITCH
HSH	HAND SWITCH HIGH
HSL	HAND SWITCH LOW
FT	FLOW TRANSMITTER
FE	FLOW ELEMENT
Q.O.E.C.	QUICK OPENING END CLOSURE

ABBREVIATIONS

TT	TEMP TRANSMITTER
FR	FLOW RECORDER
PIR	PRESSURE IND.RECORDER
TIR	TEMP. IND. RECORDER
PSH	PRESSURE SWITCH HIGH
PSL	PRESSURE SWITCH LOW
LSH	LEVEL SWITCH HIGH
LSL	LEVEL SWITCH LOW
LAH	LEVEL ALARM HIGH
LAL	LEVEL ALARM LOW
D	CONDENSATE DRAIN
A1A/B1A	150#/300# RATING
C1A/D1A	400#/600# RATING
LX/PX	PNEUMATIC/ ELECTRIC SIGNAL TRANSMITTER
FB	FULL BORE
SP	SAMPLER
NG	NATURAL GAS
V	VENT
AS	AUTO SAMPLER
CP	CORROSION PROBE
CC	CORROSION COUPON
AV	ACTUATED VALVE
SDV	SHUT DOWN VALVE
LV	LEVEL CONTROL VALVE
PV/PCV	PRESSURE CONTROL VALVE
FCV	FLOW CONTROL VALVE

00”–FLUID–00–00–A1A/B1A/C1A/D1A/D4A

- MATERIAL SPEC.
- LINE NO.
- UNIT NO.
- (P–NATURAL GAS)
- LINE SIZE (NOMINAL)

INDRADHANUSH GAS GRID LIMITED

मेकॉन लिमिटेड

MECON LIMITED

SECTION	OIL & GAS
LOCATION	DELHI
DESIGNED	
DRAWN	SUNIL
CHECKED AND VERIFIED	
APPROVED	SIG
	DATE

NORTH EAST GAS GRID (PHASE–II P/L SECTION)

LEGEND / DRAWING SYMBOLS

SCALE : NTS | SHEET 1 OF 2 | REV 0

DRG. NO. MEC/23UU/05/28/M/000/0001

SECTION–7

REV	INST.
SEC	CONCURRED BY

REV.NO	DATE	ZONE	DESCRIPTION	BY	VERIFIED
			REVISION		

REFERENCES | DRG.NO.

© Copyright MECON LIMITED – All rights reserved.
THIS DRAWING IS THE PROPERTY OF MECON AND ISSUED FOR THE SPECIFIC PROJECT MENTIONED THEREIN. THIS IS NOT TO BE COPIED OR USED FOR OTHER PROJECTS UNLESS EXPRESSLY PERMITTED BY MECON.

DRG. NO. MEC/23UU/05/28/M/000/0001

SYMBOLS & ABBREVIATIONS

SYMBOLS

- SHUT-OFF VALVE, GENERAL
- SAFETY SHUT-OFF VALVE
- CONTINIUOUS-ACTION VALVE
- RIGHT-ANGLE SHUT-OFF VALVE, GENERAL
- THREE-WAY VALVE, GENERAL
- FOUR-WAY VALVE, GENERAL
- NEEDLE VALVE
- PUSHBUTTON VALVE
- CHECK VALVE (SPRING TYPE)
- NON RETURN VALVE (SWING TYPE)
- BUTTERFLY VALVE
- CONTINUOUSLY VARIABLE BORE BUTTERFLY VALVE
- LOUVRE
- SEPERATOR GENERAL
- 2 STAGE SEPERATOR
- CYCLONE SEPERATOR
- CONDENSATE TRAP
- FLOWMETER GENERAL
- METER GENERAL
- TURBINE METER
- VORTEX-SHEDDING FLOWMETER
- DIAPHRAGM METER
- MANUALLY OPERATED ACTUATOR, GENERAL
- DIAPHRAGM ACTUATOR
- PISTON ACTUATOR
- ELECTROMAGNETIC ACTUATOR
- HYDRAULIC OR PNEUMATIC ACTUATOR, GENERAL

SYMBOLS

- SPRING-OPERATED ACTUATOR
- AUTOMATICALLY OPERATED ACTUATOR, GENERAL
- ELECTRIC MOTOR-OPERATED ACTUATOR, GENERAL
- VALVE CLOSED ON FAILURE OF ACTUATING ENERGY
- VALVE OPENED ON FAILURE OF ACTUATING ENERGY
- VALVE RETAINS POSITION ON FAILURE OF ACTUATING ENERGY
- TURBINE, GENERAL
- COMPRESSOR, GENERAL
- ROTARY PISTON COMPRESSOR
- PISTON COMPRESSOR
- JET BOOSTER
- FAN, GENERAL
- HEAT EXCHANGER WITHOUT COUNTERFLOW
- COUNTERFLOW HEAT EXCHANGER
- PLATE HEAT EXCHANGER
- FINNED HEAT EXCHANGER WITH VENTILATOR
- BLIND PLATE
- "FIGURE 8" PLATE, BLIND PLATE IN FUNCTION
- "FIGURE 8" PLATE, GOGGLE PLATE IN FUNCTION
- ORIFICE PLATE
- INSULATING FLANGE
- INSULATING COUPLING
- STRAIGHTENING VANES
- RUPTURE DISK
- SIGHT GLASS. GENRAL
- EXPANSION JOINT
- SILENCER
- PULSATION DAMPENER
- MIXING NOZZLE
- CAP
- FLANGE CONNECTION

SYMBOLS

- FILTER, GENERAL
- GAS FILTER, GENERAL
- CARTRIDGE FILTER
- GAS SORPTION FILTER
- LIQUID FILTER, GENERAL
- "Y" TYPE STRAINER
- PRESSURE REDUCING VALVE, IN AUXILIARY AND CONTRAL FACILITIES
- PRESSURE CONTROL VALVE, GENERAL
- PROCESS PRIMARY LINE
- PROCESS SECONDARY LINE
- ELECTRIC LINE
- PNEUMATIC LINE
- CAPILLARY LINE
- INSTRUMENT LINE
- HEAT TRACING LINE
- JACKETED LINE
- JACKETED & HEATED LINE
- VENT STACK
- SCRAPPER TRAP
- LIQUID PUMP GENERAL
- CENTRIFUGAL PUMP
- LIQUID RING PUMP
- PISTON PUMP
- DIAPHRAGM PUMP
- CP — CORROSION PROBE
- CC — CORROSION COUPON

ABBREVIATIONS

ESD	EMERGRNCY SHUT-DOWN
EW	DRAIN
GCV	GAS-OPERATED CONTROL VALVE
GOV	GAS-OVER OIL OPERATED VALVE
HOV	HYDRAULIC-OPERATED VALVE
LC	LOCKED CLOSED
LO	LOCKED OPEN
LP	LOCKED POSITION
LPT	LOW POINT
MCV	MOTOR CONTROL VALVE
MH	MANHOLE
MOV	MOTOR-OPERATED VALVE
SV	SOLENOID VALVE
PCV	PRESSURE CONTROL VALVE
SAV SSV	SAFETY SHUT-OFF VALVE
SBV PRV	PRESSURE RELIFE VALVE
SP	SETPOINT
TE	THERMOCOUPLE
TW	THERMOWELL
NRV	NON-RETURN VALVE
CV	CHECK VALVE
FCV	FLOW CONTROL VALVE
PGS	POWER GAS SUPPLY
IAS	INTRUMENT AIR SUPPLY
NC	NORMAL CLOSED
NO	NORMAL OPEN

INDRADHANUSH GAS GRID LIMITED

मेकॉन लिमिटेड

MECON LIMITED

SECTION	OIL & GAS
LOCATION	DELHI
DESIGNED	
DRAWN	SUNIL
CHECKED AND VERIFIED	
APPROVED	SIG
	DATE

NORTH EAST GAS GRID (PHASE-II P/L SECTION)

LEGEND / DRAWING SYMBOLS

SCALE : NTS | SHEET 2 OF 2 | REV 0

DRG. NO. MEC/23UU/05/28/M/000/0001

SECTION-7

REV / SEC	INST.				
	CONCURRED BY				

REV.NO	DATE	ZONE	DESCRIPTION	BY	VERIFIED
			REVISION		

REFERENCES | DRG.NO.

© Copyright MECON LIMITED - All rights reserved.
THIS DRAWING IS THE PROPERTY OF MECON AND ISSUED FOR THE SPECIFIC PROJECT MENTIONED THEREIN. THIS IS NOT TO BE COPIED OR USED FOR OTHER PROJECTS UNLESS EXPRESSLY PERMITTED BY MECON.

DRG. NO. MEC/23UU/05/28/M/002/0011

UNIT–25

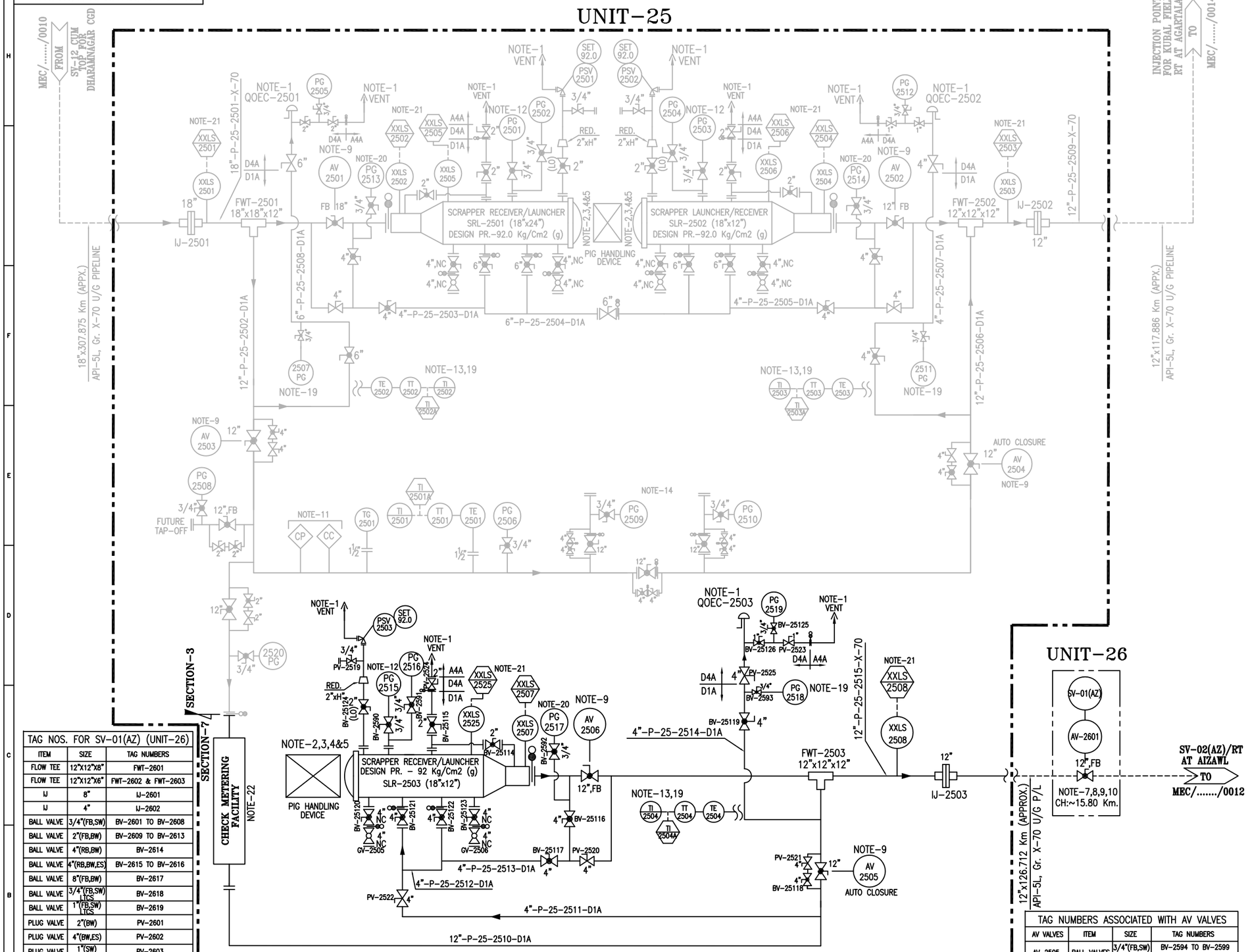

TAG NOS. FOR SV–01(AZ) (UNIT–26)		
ITEM	SIZE	TAG NUMBERS
FLOW TEE	12"X12"X8"	FWT–2601
FLOW TEE	12"X12"X6"	FWT–2602 & FWT–2603
IJ	8"	IJ–2601
IJ	4"	IJ–2602
BALL VALVE	3/4"(FB,SW)	BV–2601 TO BV–2608
BALL VALVE	2"(FB,BW)	BV–2609 TO BV–2613
BALL VALVE	4"(RB,BW)	BV–2614
BALL VALVE	4"(RB,BW,ES)	BV–2615 TO BV–2616
BALL VALVE	8"(FB,BW)	BV–2617
BALL VALVE	3/4"(FB,SW) LTCS	BV–2618
BALL VALVE	1"(FB,SW) LTCS	BV–2619
PLUG VALVE	2"(BW)	PV–2601
PLUG VALVE	4"(BW,ES)	PV–2602
PLUG VALVE	1"(SW) LTCS	PV–2603
PLUG VALVE	4"(BW) LTCS	PV–2604
QOEC	4" LTCS	QOEC–2601

RECEIVING CUM DISPATCH TERMINAL CUM IPS AT PANISAGAR
(CH. 307.875 KMS. (APPROX) FROM DT AT GUWAHATI) OR (CH. 0.0 KMS. (APPROX) FROM PANISAGAR)

NOTES:

1. ALL VENTS SHALL BE LOCATED MIN. HEIGHT OF 3 MTR. ABOVE THE HIGHEST OPERATING LEVEL.
2. SCRAPPER LAUNCHER/RECEIVER SHALL HAVE SCRAPPER HANDLING FACILITY.
3. SCRAPPER LAUNCHER/RECEIVER SHALL BE SUITABLE FOR HANDLING INTELLIGENT PIGS.
4. SCRAPPER LAUNCHER/RECEIVER SHALL HAVE QUICK OPPENING CLOSURE.
5. SCRAPPER DOOR MECHANISM TO BE CONSTRUCTED SUCH THAT THE DOOR CAN NOT BE OPENED UNLESS SCRAPPER TRAP IS FULLY DEPRESSURISED.
6. GAS DETECTORS TO BE PROVIDED NEAR FILTERS, FLOW METERS & SCRAPPER TRAPS. SIGNAL FROM GAS DETECTOR TO BE TAKEN IN CONTROL ROOM.
7. ALL SV ARE EXTENDED STEM, BUTT WELDED END WITH FULLY WELDED BODY & FULL BORE BALL VALVE.
8. BURRIED VALVE SHALL BE PROVIDED WITH CORROSION PROTECTION COATING.
9. FOR SV, HOV & AV DETAIL REFER DRG. NO. MEC/23UU/05/28/M/002/0016 /0018.
10. LOCATION OF SV STATIONS AND THEIR CHAINAGES ARE AS PER PIPELINE SCHEMATIC ROUTE DIAGRAM. HOWEVER LOCATIONS OF SV MAY GET SLIGHTLY CHANGED AS PER AVAILABILITY OF PLOT TO M/s IGGL.
11. NOTE DELETED.
12. PG–2515 SHALL HAVE A RANGE OF 0–1 KG/CM2(g) WITH A GAUGE SAVER.
13. DIRECT SURFACE CONTACT TYPE.
14. NOTE DELETED.
15. ALL BALL VALVES WITH BUTT WELDED END SHALL HAVE FULLY WELDED BODY.
16. ALL HIGHEST POINT & LOWEST POINT OF THE STATION PIPING SHALL BE PROVIDED WITH VENT & DRAIN FACILITY & SAME SHALL BE TAKEN CARE DURING PREPARATION OF GAD.
17. NOTE DELETED.
18. SUPPORT SHALL BE PROVIDED BEFORE & AFTER MAINLINE IJ.
19. DEPRESSURIZATION VALVE SHALL BE LOCATED IN SUCH A WAY THAT PG–2518 & TI–2504 CAN BE READ DURING VENTING. 1" VALVE ON VENT LINE OF THE QOEC LINE SHALL BE APPROCHABLE FOR OPERATION.
20. PG–2517 SHALL HAVE A RANGE OF 0–5 KG/CM2(G) WITH A GAUGE SAVER & LEAST COUNT OF 0.1 KG/CM2(G).
21. ALL PIG SIGNALLER SHALL BE OF NON–INTRUSIVE TYPE.
22. CHECK METERING P&ID SHALL BE PROVIDED SEPARATELY. SAME SHALL BE BIDIRECTIONAL.

PROCESS DATA

FLUID: NATURAL GAS(DRY)/RLNG
FLOW: – MMSCMD (APPX.)
OPER. PRESS.: – KG/CM2(G)
DESIGN PRESS.: 92 KG/CM2(G)
DESIGN CLASS: 600#

TEMPERATURE
WORKING : 0°–55° C
DESIGN : –29 TO 65°C

LINE LEGEND

- PROPOSED LINE A/G
- PROPOSED LINE U/G
- LINE A/G (OTHER'S SCOPE)
- LINE U/G (OTHER'S SCOPE)

12"–P–25–2510–D1A
- MATERIAL SPEC.
- LINE NO.
- UNIT NO.
- PROCESS FLUID (NG/RLNG)
- LINE SIZE (NOMINAL)

VALVE LEGEND

- BALL VALVE FLANGE END
- BALL VALVE BW END/UPTO 1½" SW END.
- PLUG VALVE BW END/UPTO 1½" SW END.
- PLUG VALVE FLANGE END
- GLOBE VALVE.

TAG NUMBERS ASSOCIATED WITH AV VALVES			
AV VALVES	ITEM	SIZE	TAG NUMBERS
AV–2505	BALL VALVES	3/4"(FB,SW) 2"(FB,BW)	BV–2594 TO BV–2599 BV–25106 TO BV–25109
AV–2506	BALL VALVES	3/4"(FB,SW) 2"(FB,BW)	BV–25100 TO BV–25105 BV–25110 TO BV–25113

INDRADHANUSH GAS GRID LIMITED

मेकॉन लिमिटेड

MECON LIMITED

REV.NO	DATE	ZONE	DESCRIPTION	BY	VERIFIED
2	18.12.20		GENERAL REVISION	UMAR	AKB
1	18.03.20		AS PER REVISED SCHEMATIC/ GENERAL REVISION	RASHMI	AKB
0	26.08.19		AS PER REVISED SCHEMATIC/ GENERAL REVISION	UMAR	AKB
A	20.06.19		FOR COMMENT PURPOSE	UMAR	AKB

REFERENCES	DRG.NO.
PIPELINE SCHEMATIC ROUTE DIAGRAM	MEC/23UU/05/28/M/000/0021 , REV – 3, SHEET 7 OF 14

© Copyright MECON LIMITED – All rights reserved.
THIS DRAWING IS THE PROPERTY OF MECON AND ISSUED FOR THE SPECIFIC PROJECT MENTIONED THEREIN. THIS IS NOT TO BE COPIED OR USED FOR OTHER PROJECTS UNLESS EXPRESSLY PERMITTED BY MECON.

SECTION	OIL & GAS
LOCATION	DELHI
DESIGNED	UMAR
DRAWN	UMAR
CHECKED AND VERIFIED	AKB
APPROVED	SIG A. GANGAL
	DATE 18.12.20

NORTH EAST GAS GRID (PHASE–II P/L SECTION)

P&ID FOR SV–01(AZ) & DISPATCH FACILITY FOR 12"x126.712 KMS. P/L TO AIZAWL AT PANISAGAR

SCALE : NTS

DRG. NO. MEC/23UU/05/28/M/002/0011

REV 2

REV / SEC	PIPING	ELEC.	INST.	CONCURRED BY

SECTION–7

DRG. NO. MEC/23UU/05/28/M/002/0012

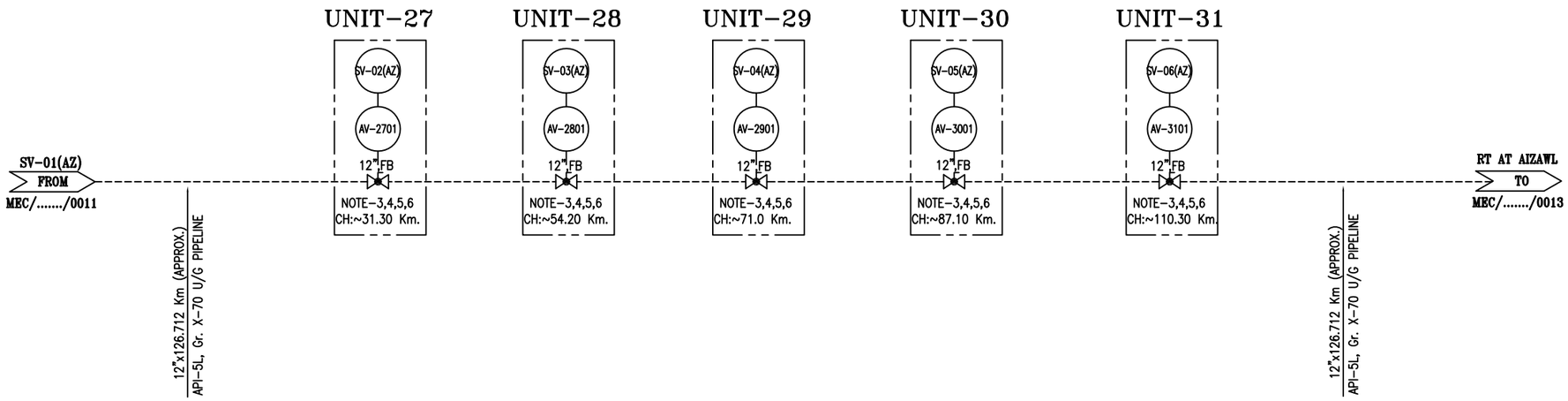

TAG NOS. FOR SV-02(AZ) (UNIT-27)		
ITEM	SIZE	TAG NUMBERS
FLOW TEE	12"X12"X8"	FWT-2701
FLOW TEE	12"X12"X6"	FWT-2702 & FWT-2703
IJ	8"	IJ-2701
IJ	4"	IJ-2702
BALL VALVE	3/4"(FB,SW)	BV-2701 TO BV-2708
BALL VALVE	2"(FB,BW)	BV-2709 TO BV-2713
BALL VALVE	4"(RB,BW)	BV-2714
BALL VALVE	4"(RB,BW,ES)	BV-2715 TO BV-2716
BALL VALVE	8"(FB,BW)	BV-2717
BALL VALVE	3/4"(FB,SW) LTCS	BV-2718
BALL VALVE	1"(FB,SW) LTCS	BV-2719
PLUG VALVE	2"(BW)	PV-2701
PLUG VALVE	4"(BW,ES)	PV-2702
PLUG VALVE	1"(SW) LTCS	PV-2703
PLUG VALVE	4"(BW) LTCS	PV-2704
QOEC	4" LTCS	QOEC-2701

TAG NOS. FOR SV-03(AZ) (UNIT-28)		
ITEM	SIZE	TAG NUMBERS
FLOW TEE	12"X12"X8"	FWT-2801
FLOW TEE	12"X12"X6"	FWT-2802 & FWT-2803
IJ	8"	IJ-2801
IJ	4"	IJ-2802
BALL VALVE	3/4"(FB,SW)	BV-2801 TO BV-2808
BALL VALVE	2"(FB,BW)	BV-2809 TO BV-2813
BALL VALVE	4"(RB,BW)	BV-2814
BALL VALVE	4"(RB,BW,ES)	BV-2815 TO BV-2816
BALL VALVE	8"(FB,BW)	BV-2817
BALL VALVE	3/4"(FB,SW) LTCS	BV-2818
BALL VALVE	1"(FB,SW) LTCS	BV-2819
PLUG VALVE	2"(BW)	PV-2801
PLUG VALVE	4"(BW,ES)	PV-2802
PLUG VALVE	1"(SW) LTCS	PV-2803
PLUG VALVE	4"(BW) LTCS	PV-2804
QOEC	4" LTCS	QOEC-2801

TAG NOS. FOR SV-04(AZ) (UNIT-29)		
ITEM	SIZE	TAG NUMBERS
FLOW TEE	12"X12"X8"	FWT-2901
FLOW TEE	12"X12"X6"	FWT-2902 & FWT-2903
IJ	8"	IJ-2901
IJ	4"	IJ-2902
BALL VALVE	3/4"(FB,SW)	BV-2901 TO BV-2908
BALL VALVE	2"(FB,BW)	BV-2909 TO BV-2913
BALL VALVE	4"(RB,BW)	BV-2914
BALL VALVE	4"(RB,BW,ES)	BV-2915 TO BV-2916
BALL VALVE	8"(FB,BW)	BV-2917
BALL VALVE	3/4"(FB,SW) LTCS	BV-2918
BALL VALVE	1"(FB,SW) LTCS	BV-2919
PLUG VALVE	2"(BW)	PV-2901
PLUG VALVE	4"(BW,ES)	PV-2902
PLUG VALVE	1"(SW) LTCS	PV-2903
PLUG VALVE	4"(BW) LTCS	PV-2904
QOEC	4" LTCS	QOEC-2901

TAG NOS. FOR SV-05(AZ) (UNIT-30)		
ITEM	SIZE	TAG NUMBERS
FLOW TEE	12"X12"X8"	FWT-3001
FLOW TEE	12"X12"X6"	FWT-3002 & FWT-3003
IJ	8"	IJ-3001
IJ	4"	IJ-3002
BALL VALVE	3/4"(FB,SW)	BV-3001 TO BV-3008
BALL VALVE	2"(FB,BW)	BV-3009 TO BV-3013
BALL VALVE	4"(RB,BW)	BV-3014
BALL VALVE	4"(RB,BW,ES)	BV-3015 TO BV-3016
BALL VALVE	8"(FB,BW)	BV-3017
BALL VALVE	3/4"(FB,SW) LTCS	BV-3018
BALL VALVE	1"(FB,SW) LTCS	BV-3019
PLUG VALVE	2"(BW)	PV-3001
PLUG VALVE	4"(BW,ES)	PV-3002
PLUG VALVE	1"(SW) LTCS	PV-3003
PLUG VALVE	4"(BW) LTCS	PV-3004
QOEC	4" LTCS	QOEC-3001

TAG NOS. FOR SV-06(AZ) (UNIT-31)		
ITEM	SIZE	TAG NUMBERS
FLOW TEE	12"X12"X8"	FWT-3101
FLOW TEE	12"X12"X6"	FWT-3102 & FWT-3103
IJ	8"	IJ-3101
IJ	4"	IJ-3102
BALL VALVE	3/4"(FB,SW)	BV-3101 TO BV-3108
BALL VALVE	2"(FB,BW)	BV-3109 TO BV-3113
BALL VALVE	4"(RB,BW)	BV-3114
BALL VALVE	4"(RB,BW,ES)	BV-3115 TO BV-3116
BALL VALVE	8"(FB,BW)	BV-3117
BALL VALVE	3/4"(FB,SW) LTCS	BV-3118
BALL VALVE	1"(FB,SW) LTCS	BV-3119
PLUG VALVE	2"(BW)	PV-3101
PLUG VALVE	4"(BW,ES)	PV-3102
PLUG VALVE	1"(SW) LTCS	PV-3103
PLUG VALVE	4"(BW) LTCS	PV-3104
QOEC	4" LTCS	QOEC-3101

NOTES:

1. ALL VENTS SHALL BE LOCATED MIN. HEIGHT OF 3 MTR. ABOVE THE HIGHEST OPERATING LEVEL.
2. NOTE DELETED.
3. ALL SV ARE EXTENDED STEM, BUTT WELDED END WITH FULLY WELDED BODY & FULL BORE BALL VALVE.
4. BURRIED VALVE SHALL BE PROVIDED WITH CORROSION PROTECTION COATING.
5. FOR SV, HOV & AV DETAIL REFER DRG. NO. MEC/23UU/05/28/M/002/0016, /0018.
6. LOCATION OF SV STATIONS AND THEIR CHAINAGES ARE AS PER PIPELINE SCHEMATIC ROUTE DIAGRAM. HOWEVER LOCATIONS OF SV MAY GET SLIGHTLY CHANGED AS PER AVAILABILITY OF PLOT TO M/s IGGL.
7. ALL BALL VALVES WITH BUTT WELDED END SHALL HAVE FULLY WELDED BODY.
8. ALL HIGHEST POINT & LOWEST POINT OF THE STATION PIPING SHALL BE PROVIDED WITH VENT & DRAIN FACILITY & SAME SHALL BE TAKEN CARE DURING PREPARATION OF GAD.
9. NOTE DELETED.
10. SUPPORT SHALL BE PROVIDED BEFORE & AFTER MAINLINE IJ.

PROCESS DATA

FLUID: NATURAL GAS(DRY)/RLNG FLOW: – MMSCMD (APPX.) OPER. PRESS.: – KG/CM2(G) DESIGN PRESS.: 92 KG/CM2(G) DESIGN CLASS: 600#	TEMPERATURE WORKING : 0°–55° C DESIGN : –29 TO 65°C

LINE LEGEND

——— PROPOSED LINE A/G
------ PROPOSED LINE U/G

12"-P-01-0101-D1A
- MATERIAL SPEC.
- LINE NO.
- UNIT NO.
- PROCESS FLUID (NG/RLNG)
- LINE SIZE (NOMINAL)

VALVE LEGEND

- BALL VALVE FLANGE END
- BALL VALVE BW END/UPTO 1½" SW END.
- PLUG VALVE BW END/UPTO 1½" SW END.
- PLUG VALVE FLANGE END
- GLOBE VALVE.

INDRADHANUSH GAS GRID LIMITED

मेकॉन लिमिटेड

MECON LIMITED

REV	DATE	ZONE	DESCRIPTION	BY	VERIFIED
2	18.12.20		GENERAL REVISION	UMAR	AKB
1	18.03.20		AS PER REVISED SCHEMATIC/ GENERAL REVISION	RASHMI	AKB
0	26.08.19		AS PER REVISED SCHEMATIC/ GENERAL REVISION	UMAR	AKB
A	20.06.19		FOR COMMENT PURPOSE	UMAR	AKB

REVISION

REFERENCES	DRG.NO.
PIPELINE SCHEMATIC ROUTE DIAGRAM	MEC/23UU/05/28/M/000/0021 , REV – 3, SHEET 7 OF 14

© Copyright MECON LIMITED – All rights reserved.

THIS DRAWING IS THE PROPERTY OF MECON AND ISSUED FOR THE SPECIFIC PROJECT MENTIONED THEREIN. THIS IS NOT TO BE COPIED OR USED FOR OTHER PROJECTS UNLESS EXPRESSLY PERMITTED BY MECON.

REV / SEC	PIPING	ELEC.	INST.	CONCURRED BY

SECTION–7

SECTION	OIL & GAS
LOCATION	DELHI
DESIGNED	UMAR
DRAWN	UMAR
CHECKED AND VERIFIED	AKB
APPROVED	SIG A. GANGAL
DATE	18.12.20

NORTH EAST GAS GRID (PHASE–II P/L SECTION)

P & ID FOR SV STATIONS ALONG 12"NB x 126.712 KMS. (APPX.) P/L TO AIZAWL

SCALE : NTS

DRG. NO. MEC/23UU/05/28/M/002/0012

REV 2

DRG. NO. MEC/23UU/05/28/M/002/0013

UNIT-32

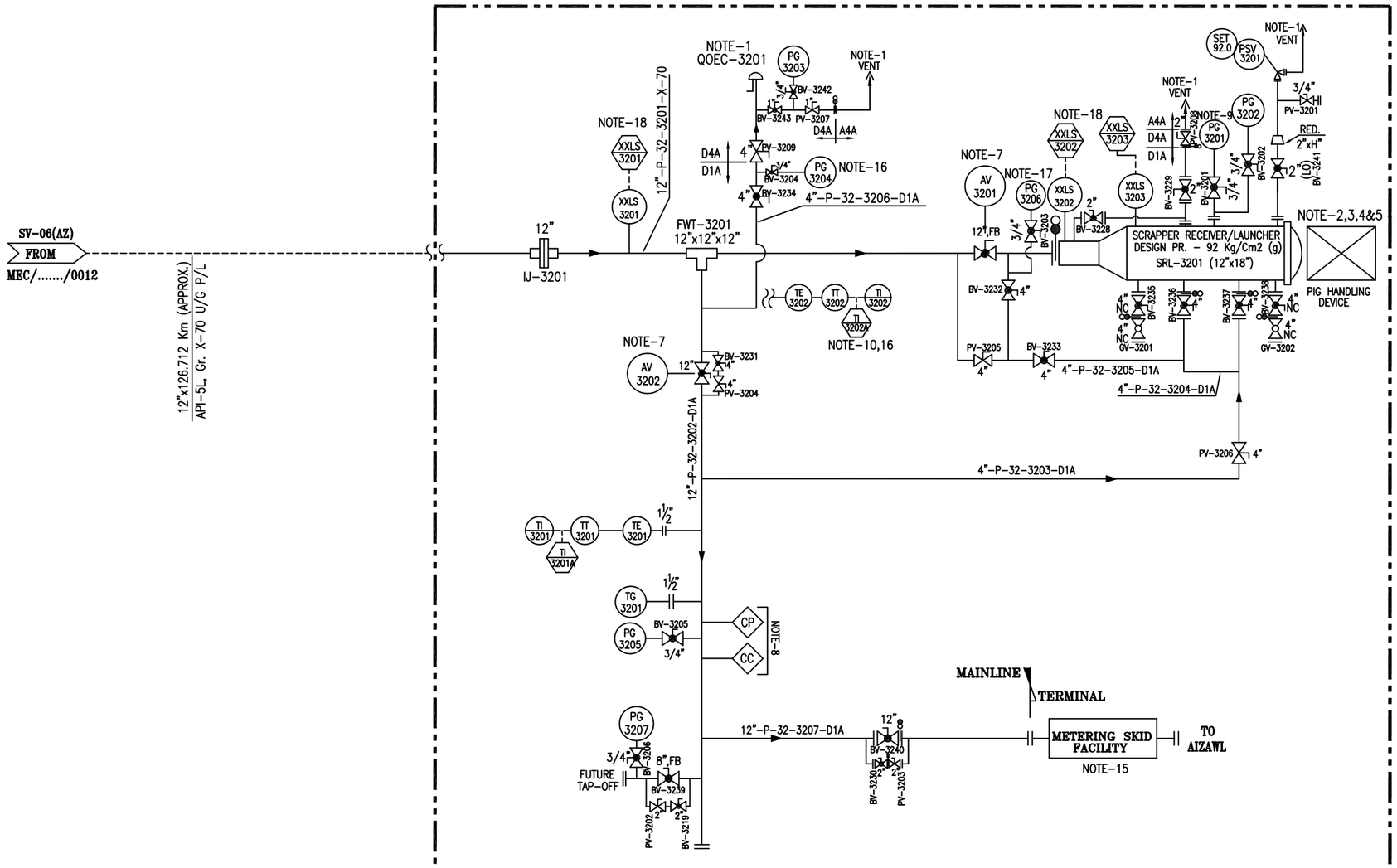

RECEIVING TERMINAL AT AIZAWL
(CH. ~126.712 KMS. FROM PANISAGAR)

TAG NUMBERS ASSOCIATED WITH AV VALVES			
AV VALVES	ITEM	SIZE	TAG NUMBERS
AV-3201	BALL VALVES	3/4"(FB,SW) 2"(FB,BW)	BV-3207 TO BV-3212 BV-3220 TO BV-3223
AV-3202	BALL VALVES	3/4"(FB,SW) 2"(FB,BW)	BV-3213 TO BV-3218 BV-3224 TO BV-3227

NOTES:

1. ALL VENTS SHALL BE LOCATED MIN. HEIGHT OF 3 MTR. ABOVE THE HIGHEST OPERATING LEVEL.
2. SCRAPPER LAUNCHER/RECEIVER SHALL HAVE SCRAPPER HANDLING FACILITY.
3. SCRAPPER LAUNCHER/RECEIVER SHALL BE SUITABLE FOR HANDLING INTELLIGENT PIGS.
4. SCRAPPER LAUNCHER/RECEIVER SHALL HAVE QUICK OPPENING CLOSURE.
5. SCRAPPER DOOR MECHANISM TO BE CONSTRUCTED SUCH THAT THE DOOR CAN NOT BE OPENED UNLESS SCRAPPER TRAP IS FULLY DEPRESSURISED.
6. GAS DETECTORS TO BE PROVIDED NEAR FILTERS, FLOW METERS & SCRAPPER TRAPS. SIGNAL FROM GAS DETECTOR TO BE TAKEN IN CONTROL ROOM.
7. FOR SV, HOV & AV DETAIL REFER DRG. NO. MEC/23UU/05/28/M/002/0016, /0017.
8. ONLINE RETRIVEL TYPE CORROSION MONITORING COUPON AND CORROSION PROBE SHALL BE PROVIDED. FURTHER WHEREVER SCADA SYSTEM ARE AVAILABLE, THIS SYSTEM SHALL BE ONLINE SCADA COMPATIBLE OTHERWISE DATA SHALL BE COLLECTED BY OFFLINE DATA LOGGER.
9. PG-3201 SHALL HAVE A RANGE OF 0-1 KG/CM2(g) WITH A GAUGE SAVER.
10. DIRECT SURFACE CONTACT TYPE.
11. ALL BALL VALVES WITH BUTT WELDED END SHALL HAVE FULLY WELDED BODY.
12. ALL HIGHEST POINT & LOWEST POINT OF THE STATION PIPING SHALL BE PROVIDED WITH VENT & DRAIN FACILITY & SAME SHALL BE TAKEN CARE DURING PREPARATION OF GAD.
13. NOTE DELETED.
14. SUPPORT SHALL BE PROVIDED BEFORE & AFTER MAINLINE IJ.
15. CUSTODY TRANSFER METERING SKID P&ID SHALL BE PROVIDED SEPARATELY.
16. DEPRESSURIZATION VALVE SHALL BE LOCATED IN SUCH A WAY THAT PG-3204 & TI-3202 CAN BE READ DURING VENTING. 1" VALVE ON VENT LINE OF THE QOEC LINE SHALL BE APPROCHABLE FOR OPERATION.
17. PG-3206 SHALL HAVE A RANGE OF 0-5 KG/CM2(G) WITH A GAUGE SAVER & LEAST COUNT OF 0.1 KG/CM2(G).
18. ALL PIG SIGNALLER SHALL BE OF NON-INTRUSIVE TYPE.

PROCESS DATA

FLUID: NATURAL GAS(DRY)/RLNG
FLOW: - MMSCMD (APPX.)
OPER. PRESS.: - KG/CM2(G)
DESIGN PRESS.: 92 KG/CM2(G)
DESIGN CLASS: 600#

TEMPERATURE
WORKING : 0°-55° C
DESIGN : -29 TO 65°C

LINE LEGEND

PROPOSED LINE A/G
PROPOSED LINE U/G

12"-P-32-3202-D1A
- MATERIAL SPEC.
- LINE NO.
- UNIT NO.
- PROCESS FLUID (NG/RLNG)
- LINE SIZE (NOMINAL)

VALVE LEGEND

BALL VALVE FLANGE END
BALL VALVE BW END/UPTO 1½" SW END.
PLUG VALVE BW END/UPTO 1½" SW END.
PLUG VALVE FLANGE END
GLOBE VALVE.

INDRADHANUSH GAS GRID LIMITED

मेकॉन लिमिटेड

MECON LIMITED

REV	DATE	ZONE	DESCRIPTION	BY	VERIFIED
2	18.12.20		GENERAL REVISION	UMAR	AKB
1	18.03.20		AS PER REVISED SCHEMATIC/ GENERAL REVISION	RASHMI	AKB
0	26.08.19		AS PER REVISED SCHEMATIC/ GENERAL REVISION	UMAR	AKB
A	20.06.19		FOR COMMENT PURPOSE	UMAR	AKB

REFERENCES	DRG.NO.
PIPELINE SCHEMATIC ROUTE DIAGRAM	MEC/23UU/05/28/M/000/0021 , REV - 3, SHEET 7 OF 14

© Copyright MECON LIMITED - All rights reserved.
THIS DRAWING IS THE PROPERTY OF MECON AND ISSUED FOR THE SPECIFIC PROJECT MENTIONED THEREIN. THIS IS NOT TO BE COPIED OR USED FOR OTHER PROJECTS UNLESS EXPRESSLY PERMITTED BY MECON.

SECTION	OIL & GAS
LOCATION	DELHI
DESIGNED	UMAR
DRAWN	UMAR
CHECKED AND VERIFIED	AKB
APPROVED	SIG A. GANGAL
	DATE 18.12.20

NORTH EAST GAS GRID (PHASE-II P/L SECTION)

P&ID FOR RECEIVING TERMINAL FOR 12"NBx126.712 KMS. P/L AT AIZAWL

SCALE : NTS

DRG. NO. MEC/23UU/05/28/M/002/0013 REV 2

REV / SEC	PIPING	ELEC.	INST.

CONCURRED BY

SECTION-7

DRG. NO. MEC/23UU/05/28/M/002/0016

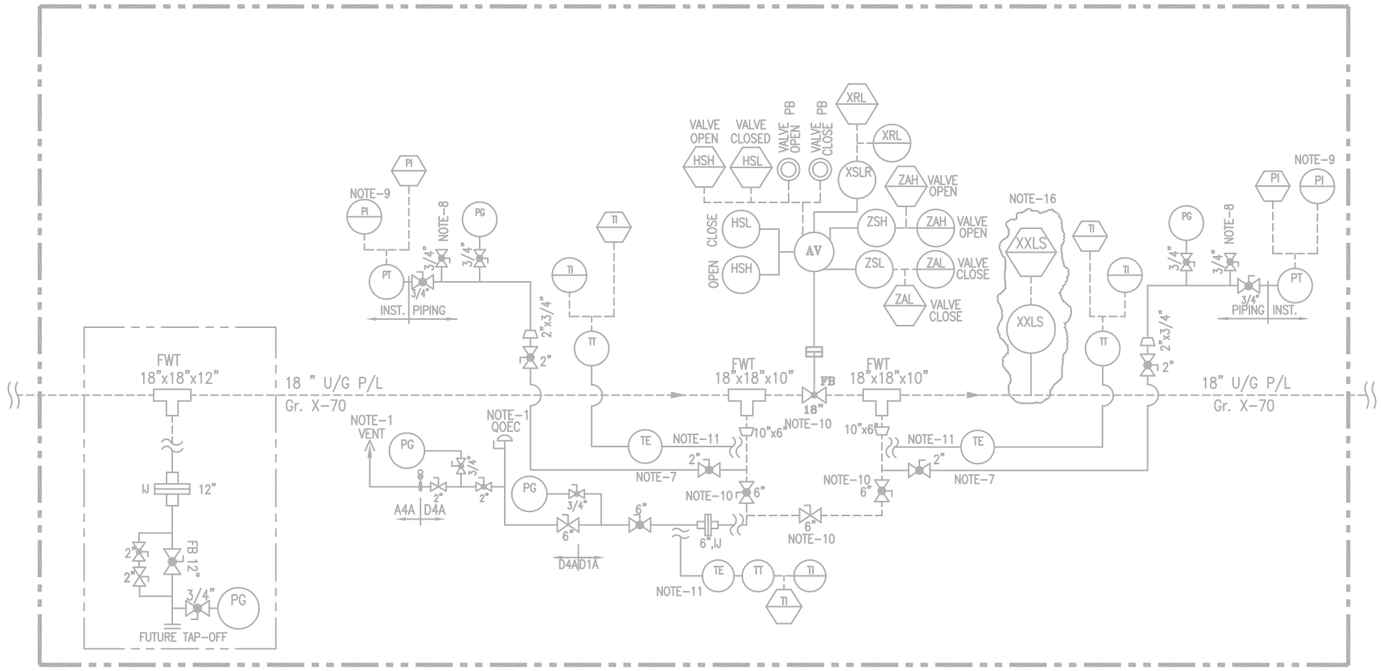

TYPICAL ARRANGEMENT FOR 18" SV (REMOTE OPERATED)

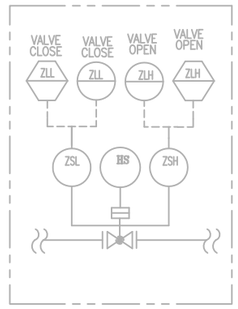

TYPICAL HOV ARRANGEMENT

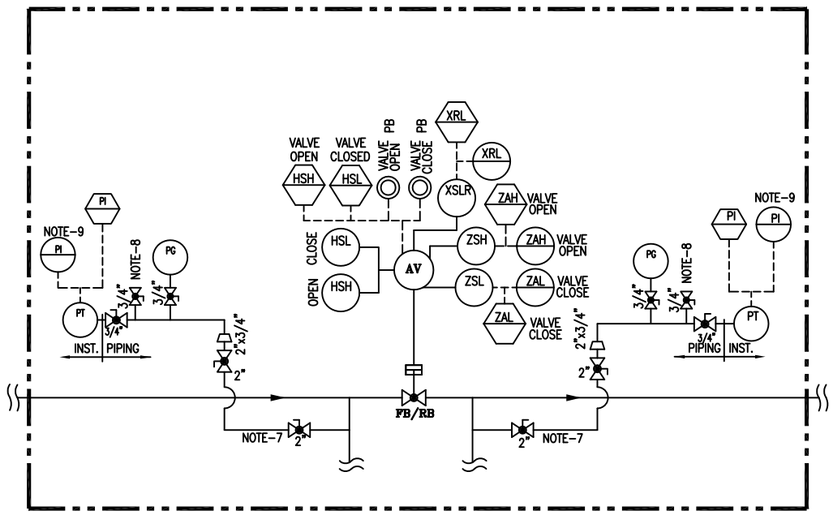

TYPICAL ARRANGEMENT FOR AV

NOTE:-

1. NOTE DELETED.
2. NOTE DELETED.
3. ALL AV (ACTUATED VALVES) SHALL BE FAILED TO STAY PUT TYPE VALVE.
4. NOTE DELETED.
5. NOTE DELETED.
6. NOTE DELETED.
7. ALL PG, PT CONNECTION SHALL BE TAKEN FROM 2" TWO ISOLATION VALVES AND THEN AFTER IT SHOULD BE CONVERTED TO REQUIRE NPT CONNECTION.
8. GAS TAPPING FOR VALVE ACTUATOR.
9. FOR PG & PT DETAIL REFER MECON STANDARD DRG.
10. NOTE DELETED.
11. NOTE DELETED.
12. ALL BALL VALVES WITH BUTT WELDED END SHALL HAVE FULLY WELDED BODY.
13. ALL HIGHEST POINT & LOWEST POINT OF THE STATION PIPING SHALL BE PROVIDED WITH VENT & DRAIN FACILITY & SAME SHALL BE TAKEN CARE DURING PREPARATION OF GAD.
14. NOTE DELETED.
15. NOTE DELETED.
16. NOTE DELETED.

LINE LEGEND

- PROPOSED LINE A/G
- PROPOSED LINE U/G
- LINE A/G (OTHER'S SCOPE)
- LINE U/G (OTHER'S SCOPE)

VALVE LEGEND

- BALL VALVE FLANGE END
- BALL VALVE BW END/UPTO 1½" SW END.
- PLUG VALVE BW END/UPTO 1½" SW END.
- PLUG VALVE FLANGE END
- GLOBE VALVE.

INDRADHANUSH GAS GRID LIMITED

मेकॉन लिमिटेड

MECON LIMITED

REV	DATE	ZONE	DESCRIPTION	BY	VERIFIED
1	18.12.20		GENERAL REVISION	UMAR	AKB
0	26.08.19		AS PER REVISED SCHEMATIC/ GENERAL REVISION	UMAR	AKB
A	20.06.19		FOR COMMENT PURPOSE	UMAR	AKB

REVISION

REFERENCES	DRG.NO.
PIPELINE SCHEMATIC ROUTE DIAGRAM	MEC/23UU/05/28/M/000/0021 , REV – 3, SHEET 7 OF 14

© Copyright MECON LIMITED – All rights reserved.
THIS DRAWING IS THE PROPERTY OF MECON AND ISSUED FOR THE SPECIFIC PROJECT MENTIONED THEREIN. THIS IS NOT TO BE COPIED OR USED FOR OTHER PROJECTS UNLESS EXPRESSLY PERMITTED BY MECON.

SECTION	OIL & GAS
LOCATION	DELHI
DESIGNED	UMAR
DRAWN	UMAR
CHECKED AND VERIFIED	AKB
APPROVED	SIG A. GANGAL
DATE	18.12.20

NORTH EAST GAS GRID (PHASE-II P/L SECTION)

TYPICAL ARRANGEMENT FOR AV

SCALE : NTS

DRG. NO. MEC/23UU/05/28/M/002/0016

REV 1

REV / SEC	PIPING	ELEC.	INST.	CONCURRED BY

SECTION-7

DRG. NO. MEC/23UU/05/28/M/002/0018

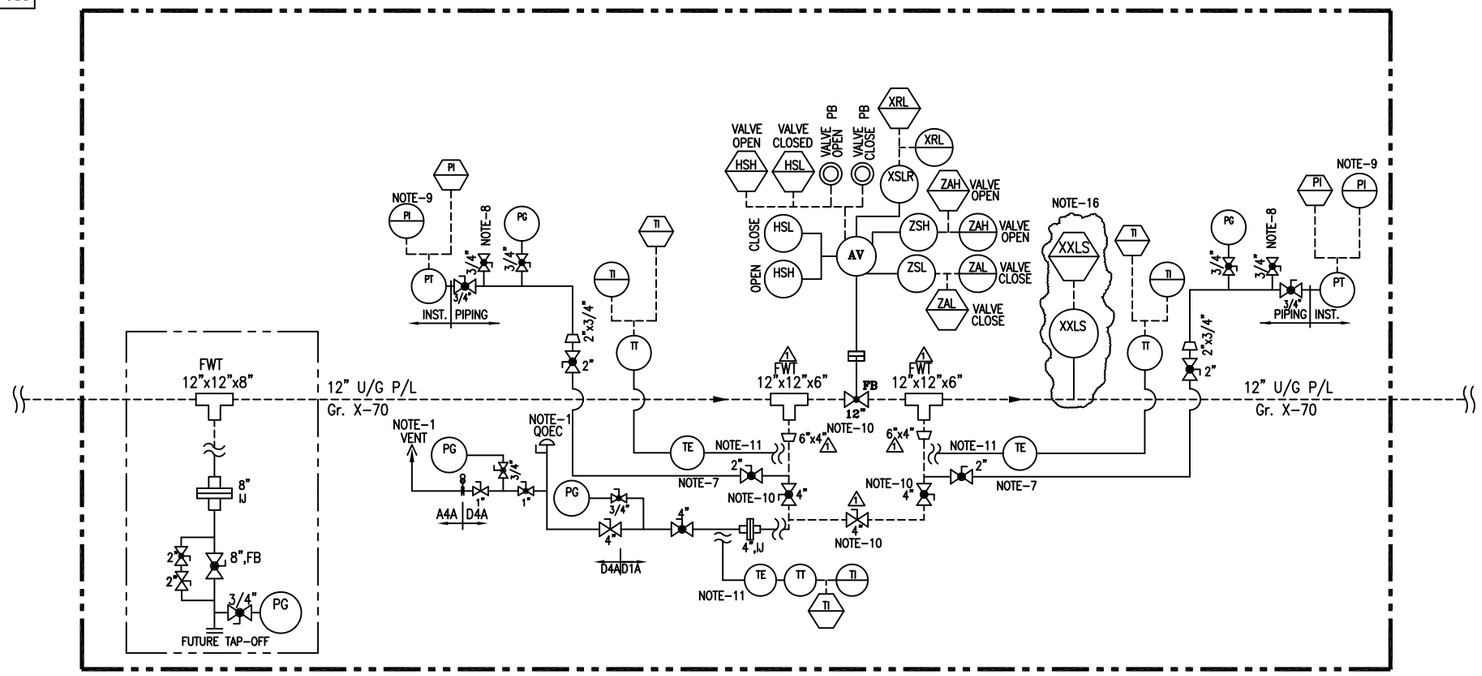

TYPICAL ARRANGEMENT FOR 12" SV (REMOTE OPERATED)

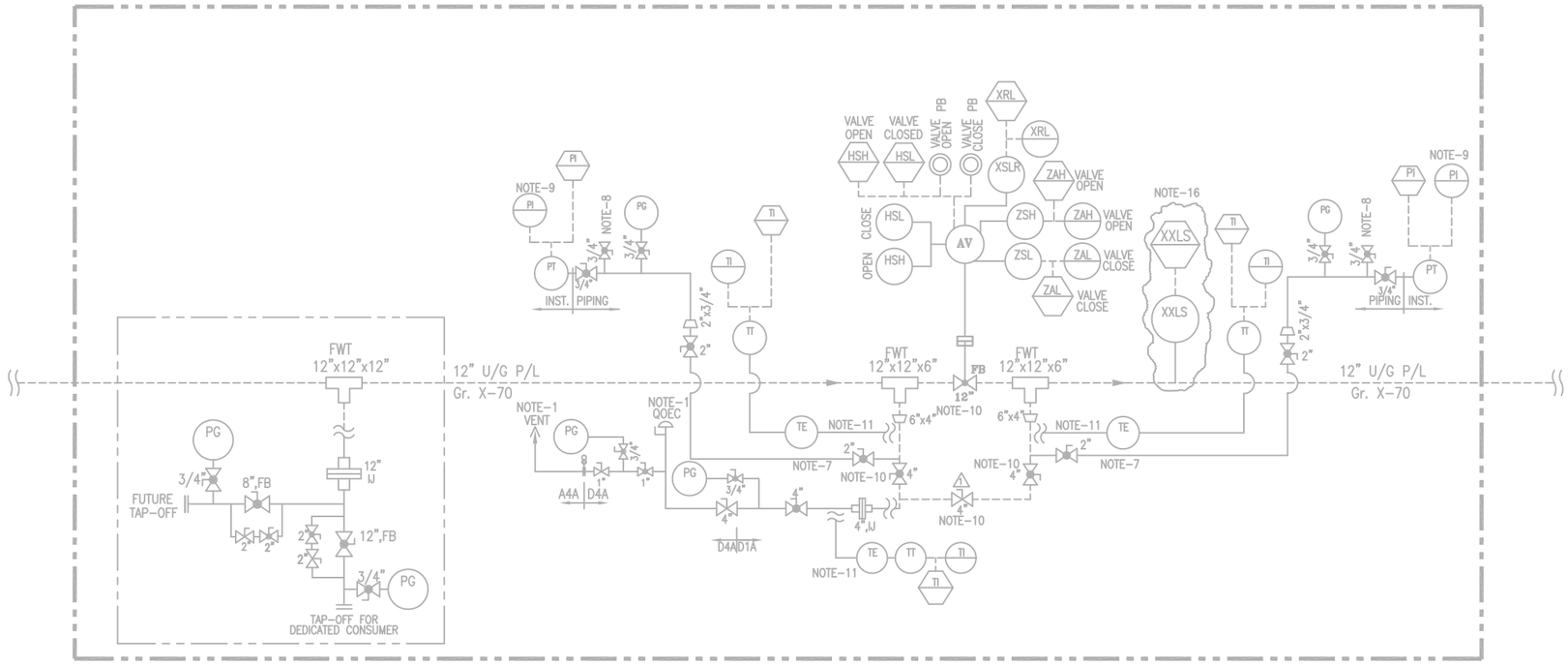

TYPICAL ARRANGEMENT FOR 12" SV WITH AN ADDITIONAL TAP-OFF POINT FOR DEDICATED CONSUMER (REMOTE OPERATED)

NOTE:-

1. ALL VENT SHALL BE LOCATED MIN. HEIGHT OF 3 MTR. ABOVE THE HIGHEST OPERATING LEVEL.
2. NOTE DELETED.
3. ALL AV (ACTUATED VALVES) SHALL BE FAILED TO STAY PUT TYPE VALVE.
4. NOTE DELETED.
5. NOTE DELETED.
6. NOTE DELETED.
7. ALL PG, PT CONNECTION SHALL BE TAKEN FROM 2" TWO ISOLATION VALVES AND THEN AFTER IT SHOULD BE CONVERTED TO REQUIRE NPT CONNECTION.
8. GAS TAPPING FOR VALVE ACTUATOR.
9. FOR PG & PT DETAIL REFER MECON STANDARD DRG.
10. EXTENDED STEM VALVE.
11. DIRECT SURFACE CONTACT TYPE.
12. ALL BALL VALVES WITH BUTT WELDED END SHALL HAVE FULLY WELDED BODY.
13. ALL HIGHEST POINT & LOWEST POINT OF THE STATION PIPING SHALL BE PROVIDED WITH VENT & DRAIN FACILITY & SAME SHALL BE TAKEN CARE DURING PREPARATION OF GAD.
14. NOTE DELETED.
15. SUPPORT SHALL BE PROVIDED BEFORE & AFTER MAINLINE IJ.
16. NON-INTRUSIVE TYPE PIG SIGNALLER TO BE INSTALLED AT FIRST & LAST SV STATION BEFORE EACH INTERMEDIATE PIGGING STATION/RECEIVING STATION.

LINE LEGEND

- PROPOSED LINE A/G
- PROPOSED LINE U/G
- LINE A/G (OTHER'S SCOPE)
- LINE U/G (OTHER'S SCOPE)

VALVE LEGEND

- BALL VALVE FLANGE END
- BALL VALVE BW END/UPTO 1½" SW END.
- PLUG VALVE BW END/UPTO 1½" SW END.
- PLUG VALVE FLANGE END
- GLOBE VALVE.

INDRADHANUSH GAS GRID LIMITED

मेकॉन लिमिटेड

MECON LIMITED

REV.NO	DATE	ZONE	DESCRIPTION	BY	VERIFIED
1	18.12.20		AS PER REQUIREMENT	UMAR	AKB
0	26.08.19		AS PER REVISED SCHEMATIC/ GENERAL REVISION	UMAR	AKB
A	20.06.19		FOR COMMENT PURPOSE	UMAR	AKB

REVISION

REFERENCES	DRG.NO.
PIPELINE SCHEMATIC ROUTE DIAGRAM	MEC/23UU/05/28/M/000/0021 , REV – 3, SHEET 7 OF 14

© Copyright MECON LIMITED – All rights reserved.
THIS DRAWING IS THE PROPERTY OF MECON AND ISSUED FOR THE SPECIFIC PROJECT MENTIONED THEREIN. THIS IS NOT TO BE COPIED OR USED FOR OTHER PROJECTS UNLESS EXPRESSLY PERMITTED BY MECON.

SECTION	OIL & GAS
LOCATION	DELHI
DESIGNED	UMAR
DRAWN	UMAR
CHECKED AND VERIFIED	AKB
APPROVED	SIG A. GANGAL
DATE	18.12.20

NORTH EAST GAS GRID (PHASE-II P/L SECTION)

TYPICAL ARRANGEMENT FOR 12" SV (REMOTE OPERATED)

SCALE : NTS

DRG. NO. MEC/23UU/05/28/M/002/0018

REV 1

REV / SEC	
PIPING	
ELEC.	
INST.	
CONCURRED BY	

SECTION-7

DRG. NO. MEC/23UU/05/28/M/000/0001

SYMBOLS & ABBREVIATIONS

SYMBOLS

- VP–PLUG VALVE
- VB–BALL VALVE WELDED END
- VB–BALL VALVE FLANGED END
- GATE VALVE
- GV–GLOBE VALVE
- PRESSURE RELIEF OR SAFETY VALVE (PSV)
- PRESSURE REGULATING VALVE (PCV) (SELF ACTUATING TYPE)
- NON RETURN VALVE
- CONTROL VALVE WITH SLAM SHUT–OFF VALVE
- SOLENOID VALVE
- GAS ACTUATED ISOLATION VALVE
- GAS ACTUATED ISOLATION VALVE WITH HANDWHEEL
- REDUCER
- FLANGE
- FLAME ARRESTOR (FA)
- RTU — REMOTE TERMINAL UNIT
- DIAPHRAM
- XXLS — PIG SIGNALLER
- VENT
- SPECTACLE BLIND

SYMBOLS

- PD METER
- TURBINE METER
- INSULATION JOINT (IJ)
- FLOW TEE (FWT)
- FIELD MOUNTED INSTRUMENT
- CONTROL PANEL MOUNTED INSTRUMENT
- ULTRASONIC METER
- SCADA INDICATOR, CONTROLLER OR OTHER DEVICES WITH OPERATOR ACCESS TO ADJUSTMENT.

ABBREVIATIONS

AE	ANALYZER SENSOR (GAS CHROMATOGRAPH)
AI	ANALYZER INDICATOR
AT	ANALYZER TRANSMITTER
FY	FLOW COMPUTER
FQI	FLOW TOTALIZER & INDICATOR
LG	LEVEL GAUGE
ZSH/ZSL	LIMIT SWITCHES (OPEN/CLOSE)
TI/TG	TEMPERATURE INDICATOR/ GAUGE
TE	TEMPERATURE ELEMENT
TW	THERMOWELL
DPI/DPG	DIFF. PRESSURE INDICATOR/ GAUGE
DPT	DIFF. PRESSURE TRANSMITTER
PI/PG	PRESSURE INDICATOR/ GAUGE
PT	PRESSURE TRANSMITTER
FC/FO	FAILURE TO CLOSE/OPEN
LO	LOCK OPEN
FIC/PIC	FLOW/PRESS. INDICATING CONTROLLER
I	INTERLOCK
XRL	LOCAL/REMOTE INDICATION
XSL	LOCAL/REMOTE SWITCH
HSH	HAND SWITCH HIGH
HSL	HAND SWITCH LOW
FT	FLOW TRANSMITTER
FE	FLOW ELEMENT
Q.O.E.C.	QUICK OPENING END CLOSURE

ABBREVIATIONS

TT	TEMP TRANSMITTER
FR	FLOW RECORDER
PIR	PRESSURE IND.RECORDER
TIR	TEMP. IND. RECORDER
PSH	PRESSURE SWITCH HIGH
PSL	PRESSURE SWITCH LOW
LSH	LEVEL SWITCH HIGH
LSL	LEVEL SWITCH LOW
LAH	LEVEL ALARM HIGH
LAL	LEVEL ALARM LOW
D	CONDENSATE DRAIN
A1A/B1A	150#/300# RATING
C1A/D1A	400#/600# RATING
LX/PX	PNEUMATIC/ ELECTRIC SIGNAL TRANSMITTER
FB	FULL BORE
SP	SAMPLER
NG	NATURAL GAS
V	VENT
AS	AUTO SAMPLER
CP	CORROSION PROBE
CC	CORROSION COUPON
AV	ACTUATED VALVE
SDV	SHUT DOWN VALVE
LV	LEVEL CONTROL VALVE
PV/PCV	PRESSURE CONTROL VALVE
FCV	FLOW CONTROL VALVE

00”–FLUID–00–00–A1A/B1A/C1A/D1A/D4A

- MATERIAL SPEC.
- LINE NO.
- UNIT NO.
- (P–NATURAL GAS)
- LINE SIZE (NOMINAL)

INDRADHANUSH GAS GRID LIMITED

मेकॉन लिमिटेड

MECON LIMITED

SECTION	OIL & GAS
LOCATION	DELHI
DESIGNED	
DRAWN	SUNIL
CHECKED AND VERIFIED	
APPROVED	SIG
	DATE

NORTH EAST GAS GRID (PHASE–II P/L SECTION)

LEGEND / DRAWING SYMBOLS

SCALE : NTS | SHEET 1 OF 2 | REV 0

DRG. NO. MEC/23UU/05/28/M/000/0001

SECTION–6

REV	INST.
SEC	CONCURRED BY

REV.NO	DATE	ZONE	DESCRIPTION	BY	VERIFIED
			REVISION		

REFERENCES | DRG.NO.

© Copyright MECON LIMITED – All rights reserved.

THIS DRAWING IS THE PROPERTY OF MECON AND ISSUED FOR THE SPECIFIC PROJECT MENTIONED THEREIN. THIS IS NOT TO BE COPIED OR USED FOR OTHER PROJECTS UNLESS EXPRESSLY PERMITTED BY MECON.

DRG. NO. MEC/23UU/05/28/M/000/0001

SYMBOLS & ABBREVIATIONS

SYMBOLS

- SHUT-OFF VALVE, GENERAL
- SAFETY SHUT-OFF VALVE
- CONTINIUOUS-ACTION VALVE
- RIGHT-ANGLE SHUT-OFF VALVE, GENERAL
- THREE-WAY VALVE, GENERAL
- FOUR-WAY VALVE, GENERAL
- NEEDLE VALVE
- PUSHBUTTON VALVE
- CHECK VALVE (SPRING TYPE)
- NON RETURN VALVE (SWING TYPE)
- BUTTERFLY VALVE
- CONTINUOUSLY VARIABLE BORE BUTTERFLY VALVE
- LOUVRE
- SEPERATOR GENERAL
- 2 STAGE SEPERATOR
- CYCLONE SEPERATOR
- CONDENSATE TRAP
- FLOWMETER GENERAL
- METER GENERAL
- TURBINE METER
- VORTEX-SHEDDING FLOWMETER
- DIAPHRAGM METER
- MANUALLY OPERATED ACTUATOR, GENERAL
- DIAPHRAGM ACTUATOR
- PISTON ACTUATOR
- ELECTROMAGNETIC ACTUATOR
- HYDRAULIC OR PNEUMATIC ACTUATOR, GENERAL

SYMBOLS

- SPRING-OPERATED ACTUATOR
- AUTOMATICALLY OPERATED ACTUATOR, GENERAL
- ELECTRIC MOTOR-OPERATED ACTUATOR, GENERAL
- VALVE CLOSED ON FAILURE OF ACTUATING ENERGY
- VALVE OPENED ON FAILURE OF ACTUATING ENERGY
- VALVE RETAINS POSITION ON FAILURE OF ACTUATING ENERGY
- TURBINE, GENERAL
- COMPRESSOR, GENERAL
- ROTARY PISTON COMPRESSOR
- PISTON COMPRESSOR
- JET BOOSTER
- FAN, GENERAL
- HEAT EXCHANGER WITHOUT COUNTERFLOW
- COUNTERFLOW HEAT EXCHANGER
- PLATE HEAT EXCHANGER
- FINNED HEAT EXCHANGER WITH VENTILATOR
- BLIND PLATE
- "FIGURE 8" PLATE, BLIND PLATE IN FUNCTION
- "FIGURE 8" PLATE, GOGGLE PLATE IN FUNCTION
- ORIFICE PLATE
- INSULATING FLANGE
- INSULATING COUPLING
- STRAIGHTENING VANES
- RUPTURE DISK
- SIGHT GLASS. GENRAL
- EXPANSION JOINT
- SILENCER
- PULSATION DAMPENER
- MIXING NOZZLE
- CAP
- FLANGE CONNECTION

SYMBOLS

- FILTER, GENERAL
- GAS FILTER, GENERAL
- CARTRIDGE FILTER
- GAS SORPTION FILTER
- LIQUID FILTER, GENERAL
- "Y" TYPE STRAINER
- PRESSURE REDUCING VALVE, IN AUXILIARY AND CONTRAL FACILITIES
- PRESSURE CONTROL VALVE, GENERAL
- PROCESS PRIMARY LINE
- PROCESS SECONDARY LINE
- ELECTRIC LINE
- PNEUMATIC LINE
- CAPILLARY LINE
- INSTRUMENT LINE
- HEAT TRACING LINE
- JACKETED LINE
- JACKETED & HEATED LINE
- VENT STACK
- SCRAPPER TRAP
- LIQUID PUMP GENERAL
- CENTRIFUGAL PUMP
- LIQUID RING PUMP
- PISTON PUMP
- DIAPHRAGM PUMP
- CP — CORROSION PROBE
- CC — CORROSION COUPON

ABBREVIATIONS

ESD	EMERGRNCY SHUT-DOWN
EW	DRAIN
GCV	GAS-OPERATED CONTROL VALVE
GOV	GAS-OVER OIL OPERATED VALVE
HOV	HYDRAULIC-OPERATED VALVE
LC	LOCKED CLOSED
LO	LOCKED OPEN
LP	LOCKED POSITION
LPT	LOW POINT
MCV	MOTOR CONTROL VALVE
MH	MANHOLE
MOV	MOTOR-OPERATED VALVE
SV	SOLENOID VALVE
PCV	PRESSURE CONTROL VALVE
SAV SSV	SAFETY SHUT-OFF VALVE
SBV PRV	PRESSURE RELIFE VALVE
SP	SETPOINT
TE	THERMOCOUPLE
TW	THERMOWELL
NRV	NON-RETURN VALVE
CV	CHECK VALVE
FCV	FLOW CONTROL VALVE
PGS	POWER GAS SUPPLY
IAS	INTRUMENT AIR SUPPLY
NC	NORMAL CLOSED
NO	NORMAL OPEN

INDRADHANUSH GAS GRID LIMITED

मेकॉन लिमिटेड

MECON LIMITED

SECTION	OIL & GAS
LOCATION	DELHI
DESIGNED	
DRAWN	SUNIL
CHECKED AND VERIFIED	
APPROVED	SIG
	DATE

NORTH EAST GAS GRID (PHASE-II P/L SECTION)

LEGEND / DRAWING SYMBOLS

SCALE : NTS | SHEET 2 OF 2 | REV 0

DRG. NO. MEC/23UU/05/28/M/000/0001

SECTION-6

REV / SEC	INST.
	CONCURRED BY

REV.NO	DATE	ZONE	DESCRIPTION	BY	VERIFIED
			REVISION		

REFERENCES | DRG.NO.

© Copyright MECON LIMITED - All rights reserved.
THIS DRAWING IS THE PROPERTY OF MECON AND ISSUED FOR THE SPECIFIC PROJECT MENTIONED THEREIN. THIS IS NOT TO BE COPIED OR USED FOR OTHER PROJECTS UNLESS EXPRESSLY PERMITTED BY MECON.

DRG. NO. MEC/23UU/05/28/M/002/0001

UNIT–01

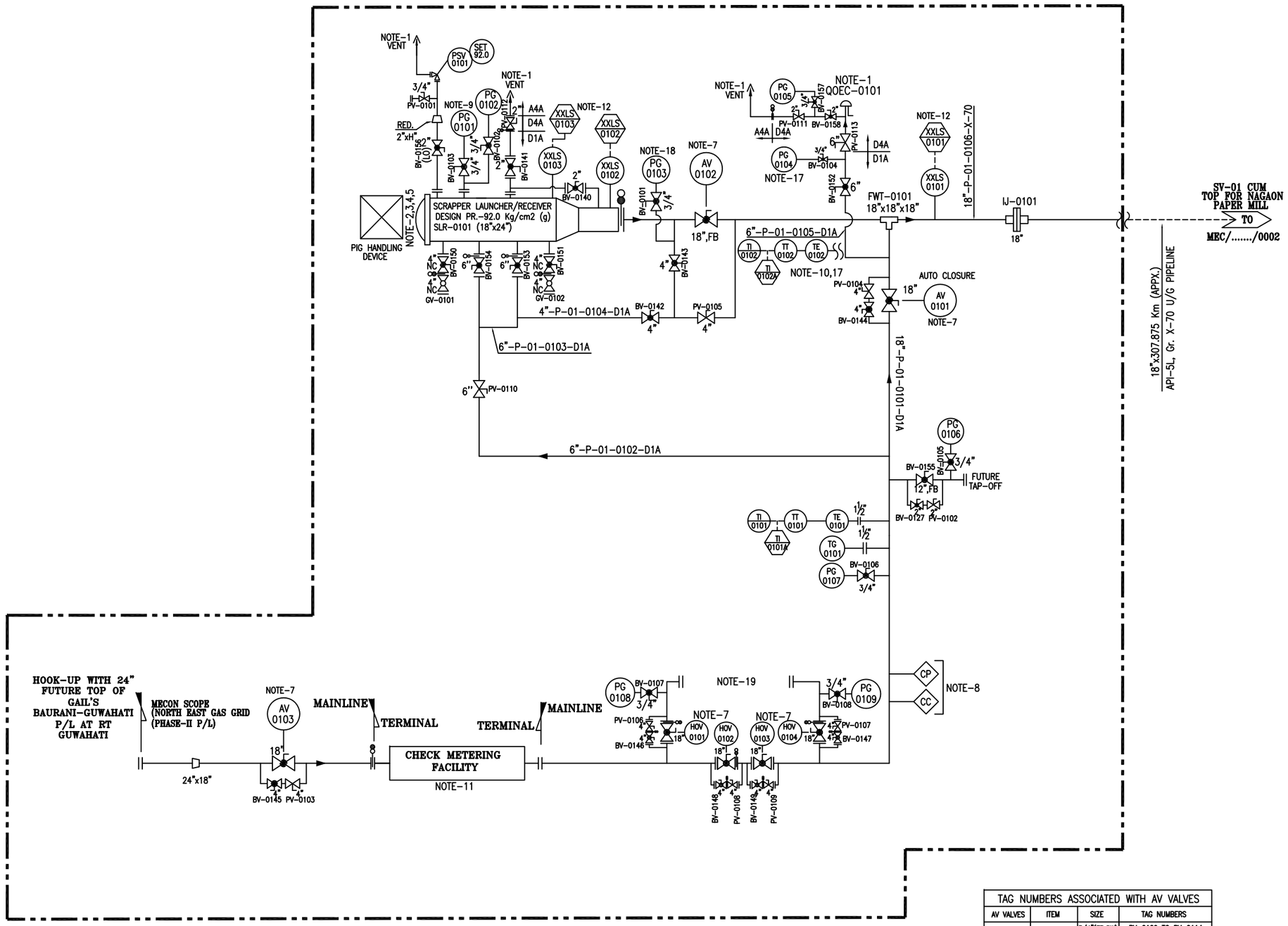

DISPATCH TERMINAL AT GUWAHATI FOR NEGG P/L (PHASE–II) (CH. 0.0 KMS. (APPX.) FROM GAIL'S DT CUM RT OF BGPL AT GUWAHATI)

TAG NUMBERS ASSOCIATED WITH AV VALVES			
AV VALVES	ITEM	SIZE	TAG NUMBERS
AV–0101	BALL VALVES	3/4"(FB,SW) 2"(FB,BW)	BV–0109 TO BV–0114 BV–0128 TO BV–0131
AV–0102	BALL VALVES	3/4"(FB,SW) 2"(FB,BW)	BV–0115 TO BV–0120 BV–0132 TO BV–0135
AV–0103	BALL VALVES	3/4"(FB,SW) 2"(FB,BW)	BV–0121 TO BV–0126 BV–0136 TO BV–0139

NOTES:

1. ALL VENTS SHALL BE LOCATED MIN. HEIGHT OF 3 MTR. ABOVE THE HIGHEST OPERATING LEVEL.
2. SCRAPPER LAUNCHER/RECEIVER SHALL HAVE SCRAPPER HANDLING FACILITY.
3. SCRAPPER LAUNCHER/RECEIVER SHALL BE SUITABLE FOR HANDLING INTELLIGENT PIGS.
4. SCRAPPER LAUNCHER/RECEIVER SHALL HAVE QUICK OPPENING CLOSURE.
5. SCRAPPER DOOR MECHANISM TO BE CONSTRUCTED SUCH THAT THE DOOR CAN NOT BE OPENED UNLESS SCRAPPER TRAP IS FULLY DEPRESSURISED.
6. GAS DETECTORS TO BE PROVIDED NEAR FILTERS, FLOW METERS, COMPRESSOR UNIT FACILITY (IF ANY) & SCRAPPER TRAPS ETC. SIGNAL FROM GAS DETECTOR TO BE TAKEN IN CONTROL ROOM.
7. FOR SV, HOV & AV DETAIL REFER DRG. NO. MEC/23UU/05/28/M/002/0016, /0017.
8. ONLINE RETRIVEL TYPE CORROSION MONITORING COUPON AND CORROSION PROBE SHALL BE PROVIDED. FURTHER WHEREVER SCADA SYSTEM ARE AVAILABLE, THIS SYSTEM SHALL BE ONLINE SCADA COMPATIBLE OTHERWISE DATA SHALL BE COLLECTED BY OFFLINE DATA LOGGER.
9. PG–0101 SHALL HAVE A RANGE OF 0–1 KG/CM2(G) WITH A GAUGE SAVER.
10. DIRECT SURFACE CONTACT TYPE.
11. CHECK METERING SKID P&ID SHALL BE PROVIDED SEPARATELY AND SHALL BE BI–DIRECTIONAL.
12. ALL PIG SIGNALLER SHALL BE OF NON–INTRUSIVE TYPE.
13. ALL BALL VALVES WITH BUTT WELDED END SHALL HAVE FULLY WELDED BODY.
14. ALL HIGHEST POINT & LOWEST POINT OF THE STATION PIPING SHALL BE PROVIDED WITH VENT & DRAIN FACILITY & SAME SHALL BE TAKEN CARE DURING PREPARATION OF GAD.
15. NOTE DELETED.
16. SUPPORT SHALL BE PROVIDED BEFORE & AFTER MAINLINE IJ.
17. DEPRESSURIZATION VALVE SHALL BE LOCATED IN SUCH A WAY THAT PG–0104 & TI–0102 CAN BE READ DURING VENTING. 2" VALVE ON VENT LINE OF THE QOEC LINE SHALL BE APPROCHABLE FOR OPERATION.
18. PG–0103 SHALL HAVE A RANGE OF 0–5 KG/CM2(G) WITH A GAUGE SAVER & LEAST COUNT OF 0.1 KG/CM2(G).
19. PROVISION FOR HOOK–UP OF FUTURE COMPRESSOR (IF REQUIRED) HAS BEEN CONSIDERED. SAME SHALL BE BIDIRECTIONAL.

PROCESS DATA

FLUID: NATURAL GAS(DRY)/RLNG

FLOW: 0.91 MMSCMD (APPX.)/ AS PER HYDRAULICS

INLET PRESS.: 30 KG/CM2(G) (APPROX.)/ AS PER HYDRAULICS

TEMPERATURE
WORKING : 0°–55° C
DESIGN : –29 TO 65°C

DESIGN PRESS.:92 KG/CM2(G)

DESIGN CLASS: 600#

LINE LEGEND

——— PROPOSED LINE A/G
– – – – – – PROPOSED LINE U/G

18"–P–01–0101–D1A
- MATERIAL SPEC.
- LINE NO.
- UNIT NO.
- PROCESS FLUID (NG/RLNG)
- LINE SIZE (NOMINAL)

VALVE LEGEND

- BALL VALVE FLANGE END
- BALL VALVE BW END/UPTO 1½" SW END.
- PLUG VALVE BW END/UPTO 1½" SW END.
- PLUG VALVE FLANGE END
- GLOBE VALVE.

INDRADHANUSH GAS GRID LIMITED

मेकॉन लिमिटेड

MECON LIMITED

REV	DATE	ZONE	DESCRIPTION	BY	VERIFIED
1	18.12.20		GENERAL REVISION	UMAR	AKB
0	26.08.19		AS PER REVISED SCHEMATIC/ GENERAL REVISION	UMAR	AKB
A	20.06.19		FOR COMMENT PURPOSE	UMAR	AKB

REVISION

REFERENCES	DRG.NO.
PIPELINE SCHEMATIC ROUTE DIAGRAM	MEC/23UU/05/28/M/000/0021 , REV – 2, SHEET 6 OF 14

© Copyright MECON LIMITED – All rights reserved.
THIS DRAWING IS THE PROPERTY OF MECON AND ISSUED FOR THE SPECIFIC PROJECT MENTIONED THEREIN. THIS IS NOT TO BE COPIED OR USED FOR OTHER PROJECTS UNLESS EXPRESSLY PERMITTED BY MECON.

SECTION	OIL & GAS
LOCATION	DELHI
DESIGNED	UMAR
DRAWN	UMAR
CHECKED AND VERIFIED	AKB
APPROVED	A. GANGAL
DATE	18.12.20

NORTH EAST GAS GRID (PHASE–II P/L SECTION)

P & ID FOR DISPATCH TERMINAL AT GUWAHATI FOR 18"NB x 307.875 KMS. (APPX.) P/L TO PANISAGAR

SCALE : NTS

DRG. NO. MEC/23UU/05/28/M/002/0001

REV 1

REV / SEC					
	PIPING				
	ELEC.				
	INST.				
	CONCURRED BY				

SECTION–6

DRG. NO. MEC/23UU/05/28/M/002/0002

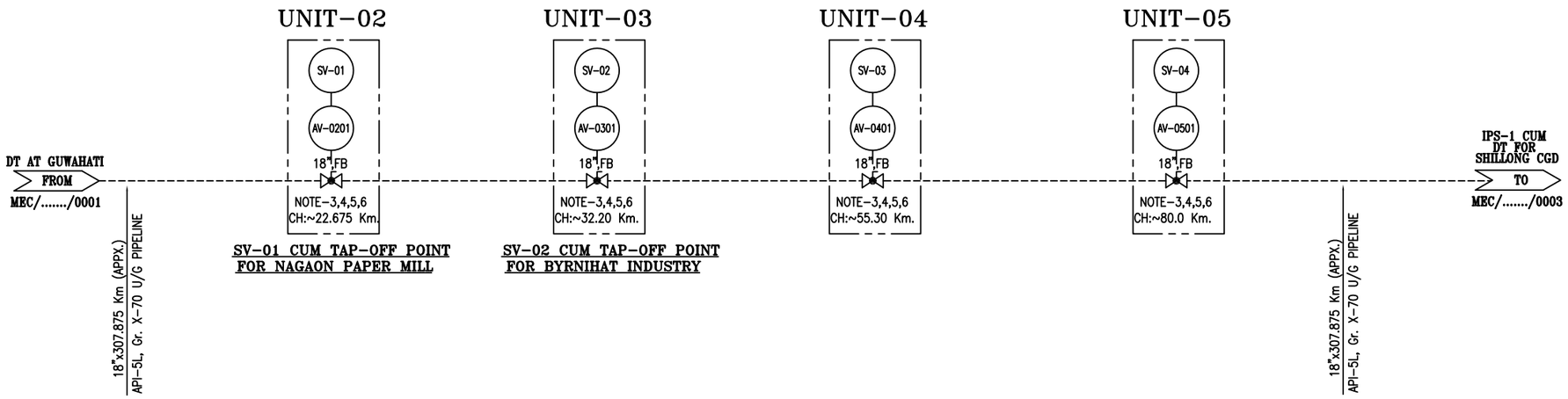

TAG NOS. FOR SV–01 (UNIT–02)		
ITEM	SIZE	TAG NUMBERS
FLOW TEE	18"X18"X12"	FWT–0201
FLOW TEE	18"X18"X10"	FWT–0202 & FWT–0203
IJ	12"	IJ–0201
IJ	6"	IJ–0202
BALL VALVE	3/4"(FB,SW)	BV–0201 TO BV–0209
BALL VALVE	2"(FB,BW)	BV–0210 TO BV–0215
BALL VALVE	6"(RB,BW)	BV–0216
BALL VALVE	6"(RB,BW,ES)	BV–0217 TO BV–0218
BALL VALVE	12"(FB,BW)	BV–0219 TO BV–0220
BALL VALVE	3/4"(FB,SW) LTCS	BV–0221
BALL VALVE	2"(FB,BW) LTCS	BV–0222
PLUG VALVE	2"(BW)	PV–0201 TO PV–0202
PLUG VALVE	6"(BW,ES)	PV–0203
PLUG VALVE	2"(BW) LTCS	PV–0204
PLUG VALVE	6"(BW) LTCS	PV–0205
QOEC	6" LTCS	QOEC–0201

TAG NOS. FOR SV–02 (UNIT–03)		
ITEM	SIZE	TAG NUMBERS
FLOW TEE	18"X18"X12"	FWT–0301
FLOW TEE	18"X18"X10"	FWT–0302 & FWT–0303
IJ	12"	IJ–0301
IJ	6"	IJ–0302
BALL VALVE	3/4"(FB,SW)	BV–0301 TO BV–0309
BALL VALVE	2"(FB,BW)	BV–0310 TO BV–0315
BALL VALVE	6"(RB,BW)	BV–0316
BALL VALVE	6"(RB,BW,ES)	BV–0317 TO BV–0318
BALL VALVE	12"(FB,BW)	BV–0319 TO BV–0320
BALL VALVE	3/4"(FB,SW) LTCS	BV–0321
BALL VALVE	2"(FB,BW) LTCS	BV–0322
PLUG VALVE	2"(BW)	PV–0301 TO PV–0302
PLUG VALVE	6"(BW,ES)	PV–0303
PLUG VALVE	2"(BW) LTCS	PV–0304
PLUG VALVE	6"(BW) LTCS	PV–0305
QOEC	6" LTCS	QOEC–0301

TAG NOS. FOR SV–03 (UNIT–04)		
ITEM	SIZE	TAG NUMBERS
FLOW TEE	18"X18"X12"	FWT–0401
FLOW TEE	18"X18"X10"	FWT–0402 & FWT–0403
IJ	12"	IJ–0401
IJ	6"	IJ–0402
BALL VALVE	3/4"(FB,SW)	BV–0401 TO BV–0408
BALL VALVE	2"(FB,BW)	BV–0409 TO BV–0413
BALL VALVE	6"(RB,BW)	BV–0414
BALL VALVE	6"(RB,BW,ES)	BV–0415 TO BV–0416
BALL VALVE	12"(FB,BW)	BV–0417
BALL VALVE	3/4"(FB,SW) LTCS	BV–0418
BALL VALVE	2"(FB,BW) LTCS	BV–0419
PLUG VALVE	2"(BW)	PV–0401
PLUG VALVE	6"(BW,ES)	PV–0402
PLUG VALVE	2"(BW) LTCS	PV–0403
PLUG VALVE	6"(BW) LTCS	PV–0404
QOEC	6" LTCS	QOEC–0401

TAG NOS. FOR SV–04 (UNIT–05)		
ITEM	SIZE	TAG NUMBERS
FLOW TEE	18"X18"X12"	FWT–0501
FLOW TEE	18"X18"X10"	FWT–0502 & FWT–0503
IJ	12"	IJ–0501
IJ	6"	IJ–0502
BALL VALVE	3/4"(FB,SW)	BV–0501 TO BV–0508
BALL VALVE	2"(FB,BW)	BV–0509 TO BV–0513
BALL VALVE	6"(RB,BW)	BV–0514
BALL VALVE	6"(RB,BW,ES)	BV–0515 TO BV–0516
BALL VALVE	12"(FB,BW)	BV–0517
BALL VALVE	3/4"(FB,SW) LTCS	BV–0518
BALL VALVE	2"(FB,BW) LTCS	BV–0519
PLUG VALVE	2"(BW)	PV–0501
PLUG VALVE	6"(BW,ES)	PV–0502
PLUG VALVE	2"(BW) LTCS	PV–0503
PLUG VALVE	6"(BW) LTCS	PV–0504
QOEC	6" LTCS	QOEC–0501

NOTES:

1. ALL VENTS SHALL BE LOCATED MIN. HEIGHT OF 3 MTR. ABOVE THE HIGHEST OPERATING LEVEL.
2. NOTE DELETED.
3. ALL SV ARE EXTENDED STEM, BUTT WELDED END WITH FULLY WELDED BODY & FULL BORE BALL VALVE.
4. BURRIED VALVE SHALL BE PROVIDED WITH CORROSION PROTECTION COATING.
5. FOR SV, HOV & AV DETAIL REFER DRG. NO. MEC/23UU/05/28/M/002/0016, /0017.
6. LOCATION OF SV STATIONS AND THEIR CHAINAGES ARE AS PER PIPELINE SCHEMATIC ROUTE DIAGRAM. HOWEVER LOCATIONS OF SV MAY GET SLIGHTLY CHANGED AS PER AVAILABILITY OF PLOT TO M/s IGGL.
7. ALL BALL VALVES WITH BUTT WELDED END SHALL HAVE FULLY WELDED BODY.
8. ALL HIGHEST POINT & LOWEST POINT OF THE STATION PIPING SHALL BE PROVIDED WITH VENT & DRAIN FACILITY & SAME SHALL BE TAKEN CARE DURING PREPARATION OF GAD.
9. NOTE DELETED.
10. SUPPORT SHALL BE PROVIDED BEFORE & AFTER MAINLINE IJ.

PROCESS DATA

FLUID: NATURAL GAS(DRY)/RLNG FLOW: – MMSCMD (APPX.) OPER. PRESS.: – KG/CM2(G) DESIGN PRESS.: 92 KG/CM2(G) DESIGN CLASS: 600#	TEMPERATURE WORKING : 0°–55° C DESIGN : –29 TO 65°C

LINE LEGEND

——— PROPOSED LINE A/G
------ PROPOSED LINE U/G

18"–P–01–0101–D1A

- MATERIAL SPEC.
- LINE NO.
- UNIT NO.
- PROCESS FLUID (NG/RLNG)
- LINE SIZE (NOMINAL)

VALVE LEGEND

- BALL VALVE FLANGE END
- BALL VALVE BW END/UPTO 1½" SW END.
- PLUG VALVE BW END/UPTO 1½" SW END.
- PLUG VALVE FLANGE END
- GLOBE VALVE.

INDRADHANUSH GAS GRID LIMITED

मेकॉन लिमिटेड

MECON LIMITED

REV	DATE	ZONE	DESCRIPTION	BY	VERIFIED
1	18.12.20		GENERAL REVISION	UMAR	AKB
0	26.08.19		AS PER REVISED SCHEMATIC/ GENERAL REVISION	UMAR	AKB
A	20.06.19		FOR COMMENT PURPOSE	UMAR	AKB

REVISION

REFERENCES	DRG.NO.
PIPELINE SCHEMATIC ROUTE DIAGRAM	MEC/23UU/05/28/M/000/0021 , REV – 2, SHEET 6 OF 14

© Copyright MECON LIMITED – All rights reserved.

THIS DRAWING IS THE PROPERTY OF MECON AND ISSUED FOR THE SPECIFIC PROJECT MENTIONED THEREIN. THIS IS NOT TO BE COPIED OR USED FOR OTHER PROJECTS UNLESS EXPRESSLY PERMITTED BY MECON.

SECTION	OIL & GAS
LOCATION	DELHI
DESIGNED	UMAR
DRAWN	UMAR
CHECKED AND VERIFIED	AKB
APPROVED	SIG A. GANGAL
DATE	18.12.20

NORTH EAST GAS GRID (PHASE–II P/L SECTION)

P & ID FOR SV STATIONS ALONG 18"NB x 307.875 KMS. (APPX.) P/L TO PANISAGAR

SCALE : NTS

DRG. NO. MEC/23UU/05/28/M/002/0002

REV 1

REV / SEC		
	PIPING	
	ELEC.	
	INST.	
	CONCURRED BY	

SECTION–6

UNIT-06

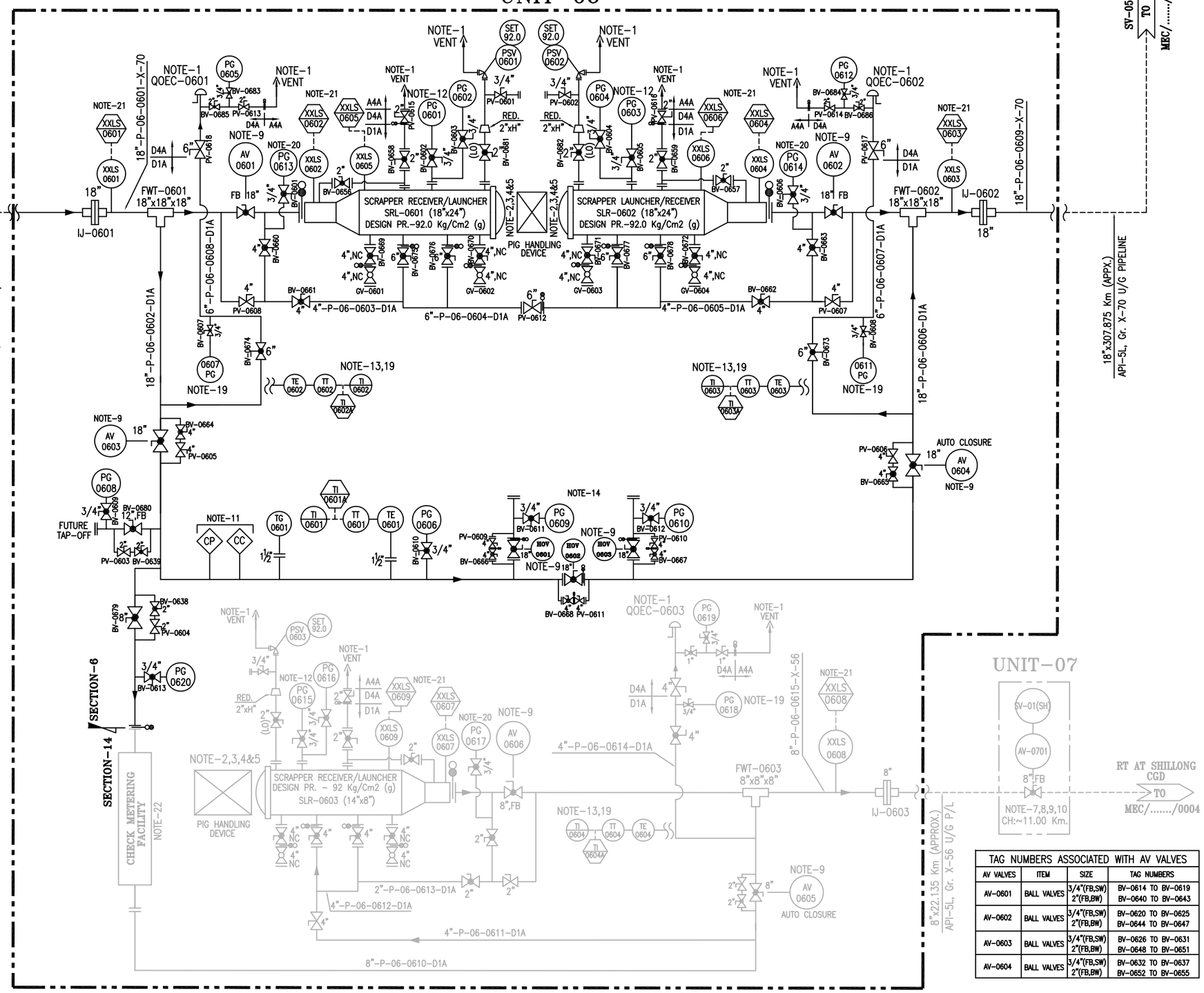

TAG NUMBERS ASSOCIATED WITH AV VALVES			
AV VALVES	ITEM	SIZE	TAG NUMBERS
AV-0601	BALL VALVES	3/4"(FB,SW) 2"(FB,BW)	BV-0614 TO BV-0619 BV-0640 TO BV-0643
AV-0602	BALL VALVES	3/4"(FB,SW) 2"(FB,BW)	BV-0620 TO BV-0625 BV-0644 TO BV-0647
AV-0603	BALL VALVES	3/4"(FB,SW) 2"(FB,BW)	BV-0626 TO BV-0631 BV-0648 TO BV-0651
AV-0604	BALL VALVES	3/4"(FB,SW) 2"(FB,BW)	BV-0632 TO BV-0637 BV-0652 TO BV-0655

INTERMEDIATE PIGGING STATION-1 CUM DT FOR SHILLONG CGD
(CH. 97.30 KMS. (APPROX) FROM DT AT GUWAHATI)

NOTES:

1. ALL VENTS SHALL BE LOCATED MIN. HEIGHT OF 3 MTR. ABOVE THE HIGHEST OPERATING LEVEL.
2. SCRAPPER LAUNCHER/RECEIVER SHALL HAVE SCRAPPER HANDLING FACILITY.
3. SCRAPPER LAUNCHER/RECEIVER SHALL BE SUITABLE FOR HANDLING INTELLIGENT PIGS.
4. SCRAPPER LAUNCHER/RECEIVER SHALL HAVE QUICK OPPENING CLOSURE.
5. SCRAPPER DOOR MECHANISM TO BE CONSTRUCTED SUCH THAT THE DOOR CAN NOT BE OPENED UNLESS SCRAPPER TRAP IS FULLY DEPRESSURISED.
6. GAS DETECTORS TO BE PROVIDED NEAR FILTERS, FLOW METERS & SCRAPPER TRAPS. SIGNAL FROM GAS DETECTOR TO BE TAKEN IN CONTROL ROOM.
7. NOTE DELETED.
8. NOTE DELETED.
9. FOR SV, HOV & AV DETAIL REFER DRG. NO. MEC/23UU/05/28/M/002/0016, /0017.
10. NOTE DELETED.
11. ONLINE RETRIVEL TYPE CORROSION MONITORING COUPON AND CORROSION PROBE SHALL BE PROVIDED. FURTHER WHEREVER SCADA SYSTEM ARE AVAILABLE, THIS SYSTEM SHALL BE ONLINE SCADA COMPATIBLE OTHERWISE DATA SHALL BE COLLECTED BY OFFLINE DATA LOGGER.
12. PG-0601 & 0603 SHALL HAVE A RANGE OF 0-1 KG/CM2(g) WITH A GAUGE SAVER.
13. DIRECT SURFACE CONTACT TYPE.
14. FUTURE PROVISION FOR SCRUBBER/CHECK METERING FACILITY. SAME SHALL BE BI-DIRECTIONAL.
15. ALL BALL VALVES WITH BUTT WELDED END SHALL HAVE FULLY WELDED BODY.
16. ALL HIGHEST POINT & LOWEST POINT OF THE STATION PIPING SHALL BE PROVIDED WITH VENT & DRAIN FACILITY & SAME SHALL BE TAKEN CARE DURING PREPARATION OF GAD.
17. NOTE DELETED.
18. SUPPORT SHALL BE PROVIDED BEFORE & AFTER MAINLINE IJ.
19. DEPRESSURIZATION VALVE SHALL BE LOCATED IN SUCH A WAY THAT PG-0607/0611 & TI-0602/0603 CAN BE READ DURING VENTING. 2" VALVE ON VENT LINE OF THE QOEC LINE SHALL BE APPROCHABLE FOR OPERATION.
20. PG-0613 & 0614 SHALL HAVE A RANGE OF 0-5 KG/CM2(G) WITH A GAUGE SAVER & LEAST COUNT OF 0.1 KG/CM2(G).
21. ALL PIG SIGNALLER SHALL BE OF NON-INTRUSIVE TYPE.
22. NOTE DELETED.

PROCESS DATA

FLUID: NATURAL GAS(DRY)/RLNG
FLOW: - MMSCMD (APPX.)
OPER. PRESS.: - KG/CM2(G)
DESIGN PRESS.: 92 KG/CM2(G)
DESIGN CLASS: 600#

TEMPERATURE
WORKING : 0°-55° C
DESIGN : -29 TO 65°C

LINE LEGEND

- PROPOSED LINE A/G
- PROPOSED LINE U/G
- LINE A/G (OTHER'S SCOPE)
- LINE U/G (OTHER'S SCOPE)

18"-P-06-0601-D1A
8"-P-06-0601-D1A
- MATERIAL SPEC.
- LINE NO.
- UNIT NO.
- PROCESS FLUID (NG/RLNG)
- LINE SIZE (NOMINAL)

VALVE LEGEND

- BALL VALVE FLANGE END
- BALL VALVE BW END/UPTO 1 1/2" SW END.
- PLUG VALVE BW END/UPTO 1 1/2" SW END.
- PLUG VALVE FLANGE END
- GLOBE VALVE.

INDRADHANUSH GAS GRID LIMITED
मेकॉन लिमिटेड
MECON LIMITED

REV	DATE	ZONE	DESCRIPTION	BY	VERIFIED
2	18.12.20		GENERAL REVISION	UMAR	AKB
1	18.03.20		AS PER REVISED SCHEMATIC/ GENERAL REVISION	RASHMI	AKB
0	26.08.19		AS PER REVISED SCHEMATIC/ GENERAL REVISION	UMAR	AKB
A	20.06.19		FOR COMMENT PURPOSE	UMAR	AKB

REFERENCES	DRG.NO.
PIPELINE SCHEMATIC ROUTE DIAGRAM	MEC/23UU/05/28/M/000/0021 , REV - 2, SHEET 6 OF 14

© Copyright MECON LIMITED - All rights reserved.
THIS DRAWING IS THE PROPERTY OF MECON AND ISSUED FOR THE SPECIFIC PROJECT MENTIONED THEREIN. THIS IS NOT TO BE COPIED OR USED FOR OTHER PROJECTS UNLESS EXPRESSLY PERMITTED BY MECON.

SECTION	OIL & GAS
LOCATION	DELHI
DESIGNED	UMAR
DRAWN	UMAR
CHECKED AND VERIFIED	AKB
APPROVED	SIG A. GANGAL
	DATE 18.12.20

NORTH EAST GAS GRID (PHASE-II P/L SECTION)

P&ID FOR INTERMEDIATE PIGGING STATION-1

SCALE : NTS

DRG. NO. MEC/23UU/05/28/M/002/0003 REV 2

SECTION-6

REV / SEC	PIPING	ELEC.	INST.

CONCURRED BY

DRG. NO. MEC/23UU/05/28/M/002/0005

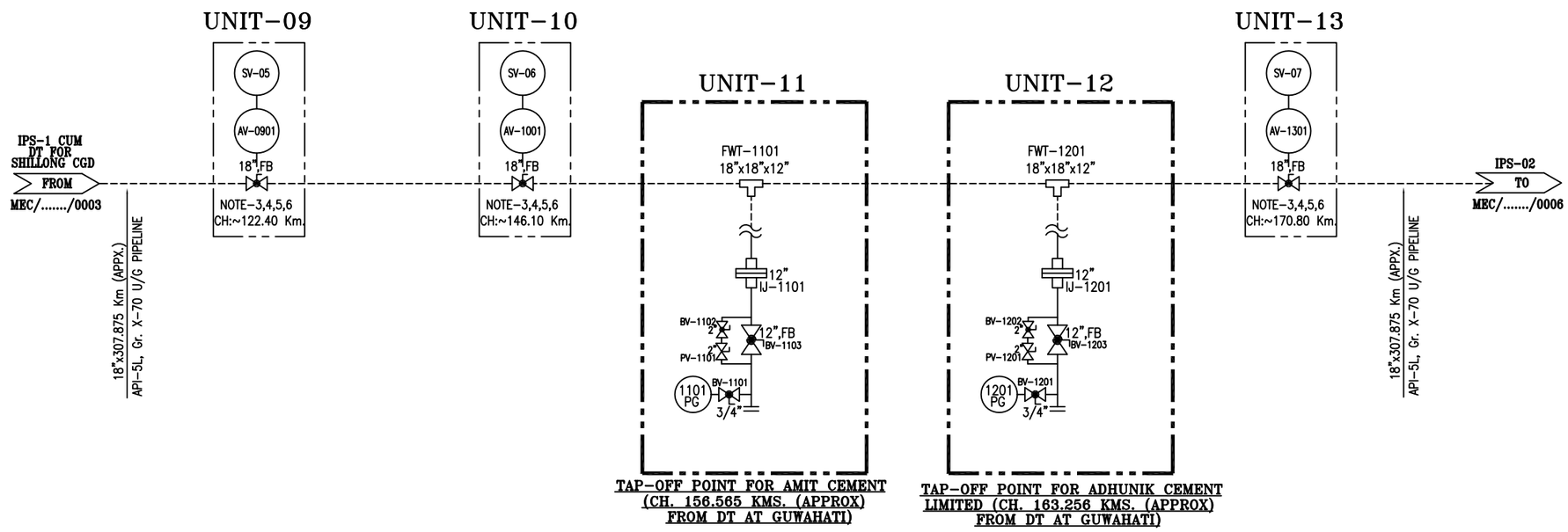

TAP-OFF POINT FOR AMIT CEMENT (CH. 156.565 KMS. (APPROX) FROM DT AT GUWAHATI)

TAP-OFF POINT FOR ADHUNIK CEMENT LIMITED (CH. 163.256 KMS. (APPROX) FROM DT AT GUWAHATI)

NOTES:

1. ALL VENTS SHALL BE LOCATED MIN. HEIGHT OF 3 MTR. ABOVE THE HIGHEST OPERATING LEVEL.
2. NOTE DELETED.
3. ALL SV ARE EXTENDED STEM, BUTT WELDED END WITH FULLY WELDED BODY & FULL BORE BALL VALVE.
4. BURRIED VALVE SHALL BE PROVIDED WITH CORROSION PROTECTION COATING.
5. FOR SV, HOV & AV DETAIL REFER DRG. NO. MEC/23UU/05/28/M/002/0016, /0017.
6. LOCATION OF SV STATIONS AND THEIR CHAINAGES ARE AS PER PIPELINE SCHEMATIC ROUTE DIAGRAM. HOWEVER LOCATIONS OF SV MAY GET SLIGHTLY CHANGED AS PER AVAILABILITY OF PLOT TO M/s IGGL.
7. ALL BALL VALVES WITH BUTT WELDED END SHALL HAVE FULLY WELDED BODY.
8. ALL HIGHEST POINT & LOWEST POINT OF THE STATION PIPING SHALL BE PROVIDED WITH VENT & DRAIN FACILITY & SAME SHALL BE TAKEN CARE DURING PREPARATION OF GAD.
9. NOTE DELETED.
10. SUPPORT SHALL BE PROVIDED BEFORE & AFTER MAINLINE IJ.

PROCESS DATA

FLUID: NATURAL GAS(DRY)/RLNG FLOW: – MMSCMD (APPX.) OPER. PRESS.: – KG/CM2(G) DESIGN PRESS.: 92 KG/CM2(G) DESIGN CLASS: 600#	TEMPERATURE WORKING : 0°–55° C DESIGN : –29 TO 65°C

LINE LEGEND

——— PROPOSED LINE A/G
------ PROPOSED LINE U/G

18"-P-09-0901-D1A

- MATERIAL SPEC.
- LINE NO.
- UNIT NO.
- PROCESS FLUID (NG/RLNG)
- LINE SIZE (NOMINAL)

VALVE LEGEND

- BALL VALVE FLANGE END
- BALL VALVE BW END/UPTO 1½" SW END.
- PLUG VALVE BW END/UPTO 1½" SW END.
- PLUG VALVE FLANGE END
- GLOBE VALVE.

TAG NOS. FOR SV-05 (UNIT-09)		
ITEM	SIZE	TAG NUMBERS
FLOW TEE	18"X18"X12"	FWT-0901
FLOW TEE	18"X18"X10"	FWT-0902 & FWT-0903
IJ	12"	IJ-0901
IJ	6"	IJ-0902
BALL VALVE	3/4"(FB,SW)	BV-0901 TO BV-0908
BALL VALVE	2"(FB,BW)	BV-0909 TO BV-0913
BALL VALVE	6"(RB,BW)	BV-0914
BALL VALVE	6"(RB,BW,ES)	BV-0915 TO BV-0916
BALL VALVE	12"(FB,BW)	BV-0917
BALL VALVE	3/4"(FB,SW) LTCS	BV-0918
BALL VALVE	2"(FB,BW) LTCS	BV-0919
PLUG VALVE	2"(BW)	PV-0901
PLUG VALVE	6"(BW,ES)	PV-0902
PLUG VALVE	2"(BW) LTCS	PV-0903
PLUG VALVE	6"(BW) LTCS	PV-0904
QOEC	6" LTCS	QOEC-0901

TAG NOS. FOR SV-06 (UNIT-10)		
ITEM	SIZE	TAG NUMBERS
FLOW TEE	18"X18"X12"	FWT-1001
FLOW TEE	18"X18"X10"	FWT-1002 & FWT-1003
IJ	12"	IJ-1001
IJ	6"	IJ-1002
BALL VALVE	3/4"(FB,SW)	BV-1001 TO BV-1008
BALL VALVE	2"(FB,BW)	BV-1009 TO BV-1013
BALL VALVE	6"(RB,BW)	BV-1014
BALL VALVE	6"(RB,BW,ES)	BV-1015 TO BV-1016
BALL VALVE	12"(FB,BW)	BV-1017
BALL VALVE	3/4"(FB,SW) LTCS	BV-1018
BALL VALVE	2"(FB,BW) LTCS	BV-1019
PLUG VALVE	2"(BW)	PV-1001
PLUG VALVE	6"(BW,ES)	PV-1002
PLUG VALVE	2"(BW) LTCS	PV-1003
PLUG VALVE	6"(BW) LTCS	PV-1004
QOEC	6" LTCS	QOEC-1001

TAG NOS. FOR SV-07 (UNIT-13)		
ITEM	SIZE	TAG NUMBERS
FLOW TEE	18"X18"X12"	FWT-1301
FLOW TEE	18"X18"X10"	FWT-1302 & FWT-1303
IJ	12"	IJ-1301
IJ	6"	IJ-1302
BALL VALVE	3/4"(FB,SW)	BV-1301 TO BV-1308
BALL VALVE	2"(FB,BW)	BV-1309 TO BV-1313
BALL VALVE	6"(RB,BW)	BV-1314
BALL VALVE	6"(RB,BW,ES)	BV-1315 TO BV-1316
BALL VALVE	12"(FB,BW)	BV-1317
BALL VALVE	3/4"(FB,SW) LTCS	BV-1318
BALL VALVE	2"(FB,BW) LTCS	BV-1319
PLUG VALVE	2"(BW)	PV-1301
PLUG VALVE	6"(BW,ES)	PV-1302
PLUG VALVE	2"(BW) LTCS	PV-1303
PLUG VALVE	6"(BW) LTCS	PV-1304
QOEC	6" LTCS	QOEC-1301

INDRADHANUSH GAS GRID LIMITED

मेकॉन लिमिटेड

MECON LIMITED

REV	DATE	ZONE	DESCRIPTION	BY	VERIFIED
1	18.12.20		GENERAL REVISION	UMAR	AKB
0	26.08.19		AS PER REVISED SCHEMATIC/ GENERAL REVISION	UMAR	AKB
A	20.06.19		FOR COMMENT PURPOSE	UMAR	AKB

REVISION

REFERENCES: PIPELINE SCHEMATIC ROUTE DIAGRAM — DRG.NO. MEC/23UU/05/28/M/000/0021, REV – 2, SHEET 6 OF 14

© Copyright MECON LIMITED – All rights reserved.

THIS DRAWING IS THE PROPERTY OF MECON AND ISSUED FOR THE SPECIFIC PROJECT MENTIONED THEREIN. THIS IS NOT TO BE COPIED OR USED FOR OTHER PROJECTS UNLESS EXPRESSLY PERMITTED BY MECON.

REV / SEC					
	PIPING				
	ELEC.				
	INST.				
	CONCURRED BY				

SECTION–6

SECTION	OIL & GAS
LOCATION	DELHI
DESIGNED	UMAR
DRAWN	UMAR
CHECKED AND VERIFIED	AKB
APPROVED	SIG A. GANGAL
DATE	18.12.20

NORTH EAST GAS GRID (PHASE–II P/L SECTION)

P & ID FOR SV STATIONS, TOP FOR AMIT & ADHUNIK CEMENT ALONG 18"NB x 307.875 KMS. (APPX.) P/L TO PANISAGAR

SCALE : NTS

DRG. NO. MEC/23UU/05/28/M/002/0005 — REV 1

DRG. NO. MEC/23UU/05/28/M/002/0006

UNIT–14

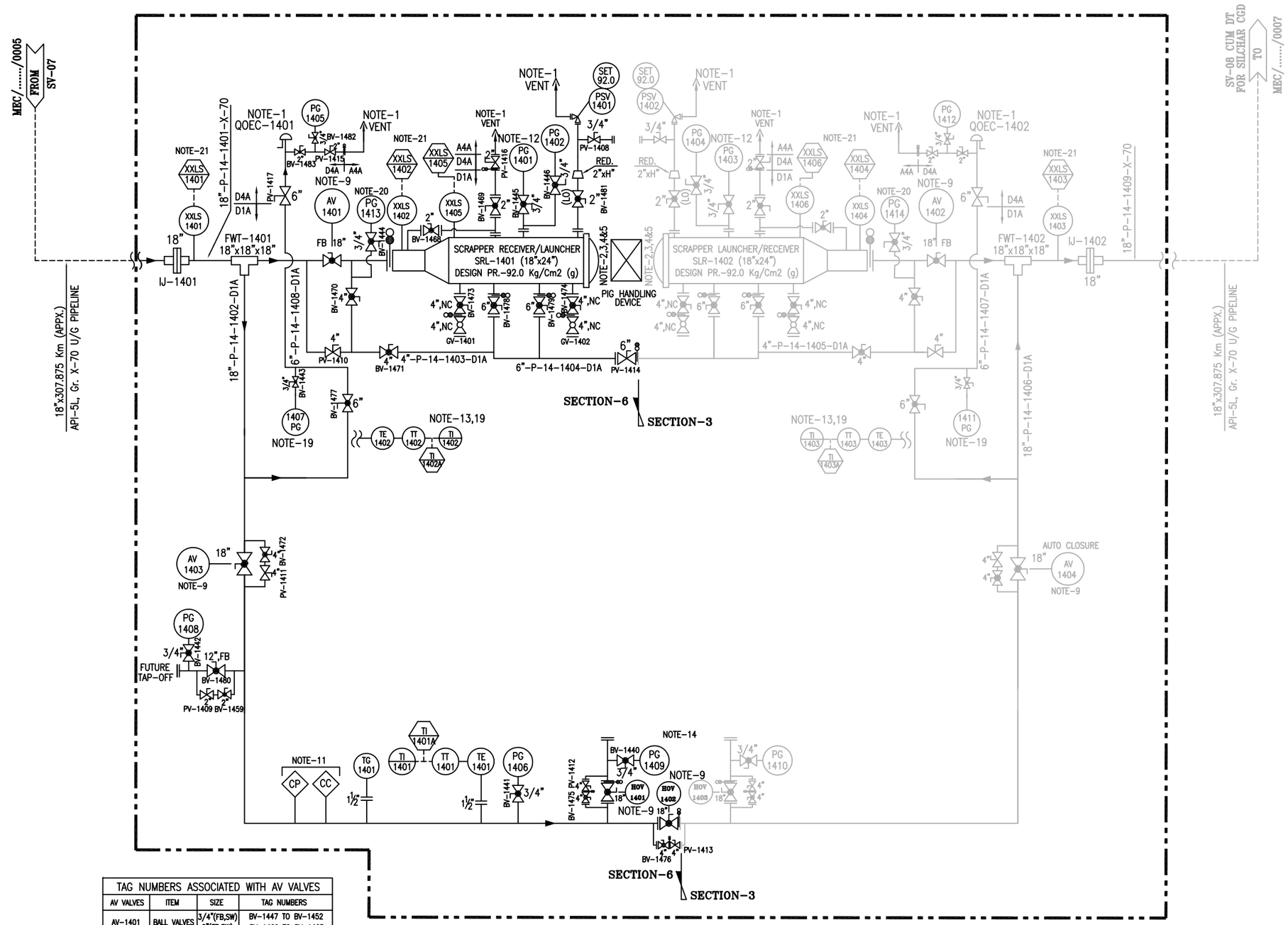

TAG NUMBERS ASSOCIATED WITH AV VALVES			
AV VALVES	ITEM	SIZE	TAG NUMBERS
AV-1401	BALL VALVES	3/4"(FB,SW) 2"(FB,BW)	BV-1447 TO BV-1452 BV-1460 TO BV-1463
AV-1403	BALL VALVES	3/4"(FB,SW) 2"(FB,BW)	BV-1453 TO BV-1458 BV-1464 TO BV-1467

INTERMEDIATE PIGGING STATION–2 (IPS–2)
(CH. 195.70 KMS. (APPROX) FROM DT AT GUWAHATI)

NOTES:

1. ALL VENTS SHALL BE LOCATED MIN. HEIGHT OF 3 MTR. ABOVE THE HIGHEST OPERATING LEVEL.
2. SCRAPPER LAUNCHER/RECEIVER SHALL HAVE SCRAPPER HANDLING FACILITY.
3. SCRAPPER LAUNCHER/RECEIVER SHALL BE SUITABLE FOR HANDLING INTELLIGENT PIGS.
4. SCRAPPER LAUNCHER/RECEIVER SHALL HAVE QUICK OPPENING CLOSURE.
5. SCRAPPER DOOR MECHANISM TO BE CONSTRUCTED SUCH THAT THE DOOR CAN NOT BE OPENED UNLESS SCRAPPER TRAP IS FULLY DEPRESSURISED.
6. GAS DETECTORS TO BE PROVIDED NEAR FILTERS, FLOW METERS & SCRAPPER TRAPS. SIGNAL FROM GAS DETECTOR TO BE TAKEN IN CONTROL ROOM.
7. NOTE DELETED.
8. NOTE DELETED.
9. FOR SV, HOV & AV DETAIL REFER DRG. NO. MEC/23UU/05/28/M/002/0016, /0017.
10. NOTE DELETED.
11. ONLINE RETRIVEL TYPE CORROSION MONITORING COUPON AND CORROSION PROBE SHALL BE PROVIDED. FURTHER WHEREVER SCADA SYSTEM ARE AVAILABLE, THIS SYSTEM SHALL BE ONLINE SCADA COMPATIBLE OTHERWISE DATA SHALL BE COLLECTED BY OFFLINE DATA LOGGER.
12. PG–1401 SHALL HAVE A RANGE OF 0–1 KG/CM2(g) WITH A GAUGE SAVER.
13. DIRECT SURFACE CONTACT TYPE.
14. FUTURE PROVISION FOR SCRUBBER/CHECK METERING FACILITY. SAME SHALL BE BI–DIRECTIONAL.
15. ALL BALL VALVES WITH BUTT WELDED END SHALL HAVE FULLY WELDED BODY.
16. ALL HIGHEST POINT & LOWEST POINT OF THE STATION PIPING SHALL BE PROVIDED WITH VENT & DRAIN FACILITY & SAME SHALL BE TAKEN CARE DURING PREPARATION OF GAD.
17. NOTE DELETED.
18. SUPPORT SHALL BE PROVIDED BEFORE & AFTER MAINLINE IJ.
19. DEPRESSURIZATION VALVE SHALL BE LOCATED IN SUCH A WAY THAT PG–1407 & TI–1402 CAN BE READ DURING VENTING. 2" VALVE ON VENT LINE OF THE QOEC LINE SHALL BE APPROCHABLE FOR OPERATION.
20. PG–1413 SHALL HAVE A RANGE OF 0–5 KG/CM2(G) WITH A GAUGE SAVER & LEAST COUNT OF 0.1 KG/CM2(G).
21. ALL PIG SIGNALLER SHALL BE OF NON–INTRUSIVE TYPE.

PROCESS DATA

FLUID: NATURAL GAS(DRY)/RLNG
FLOW: – MMSCMD (APPX.)
OPER. PRESS.: – KG/CM2(G)
DESIGN PRESS.: 92 KG/CM2(G)
DESIGN CLASS: 600#

TEMPERATURE
WORKING : 0°–55° C
DESIGN : –29 TO 65°C

LINE LEGEND

- PROPOSED LINE A/G
- PROPOSED LINE U/G
- LINE A/G (OTHER'S SCOPE)
- LINE U/G (OTHER'S SCOPE)

18"–P–14–1401–D1A
- MATERIAL SPEC.
- LINE NO.
- UNIT NO.
- PROCESS FLUID (NG/RLNG)
- LINE SIZE (NOMINAL)

VALVE LEGEND

- BALL VALVE FLANGE END
- BALL VALVE BW END/UPTO 1½" SW END.
- PLUG VALVE BW END/UPTO 1½" SW END.
- PLUG VALVE FLANGE END
- GLOBE VALVE.

INDRADHANUSH GAS GRID LIMITED

मेकॉन लिमिटेड

MECON LIMITED

REV	DATE	ZONE	DESCRIPTION	BY	VERIFIED
1	18.12.20		GENERAL REVISION	UMAR	AKB
0	26.08.19		AS PER REVISED SCHEMATIC/ GENERAL REVISION	UMAR	AKB
A	20.06.19		FOR COMMENT PURPOSE	UMAR	AKB

PIPELINE SCHEMATIC ROUTE DIAGRAM — MEC/23UU/05/28/M/000/0021, REV – 2, SHEET 6 OF 14

REFERENCES — DRG.NO.

© Copyright MECON LIMITED – All rights reserved.
THIS DRAWING IS THE PROPERTY OF MECON AND ISSUED FOR THE SPECIFIC PROJECT MENTIONED THEREIN. THIS IS NOT TO BE COPIED OR USED FOR OTHER PROJECTS UNLESS EXPRESSLY PERMITTED BY MECON.

SECTION	OIL & GAS
LOCATION	DELHI
DESIGNED	UMAR
DRAWN	UMAR
CHECKED AND VERIFIED	AKB
APPROVED	SIG A. GANGAL
	DATE 18.12.20

NORTH EAST GAS GRID (PHASE–II P/L SECTION)

P&ID FOR INTERMEDIATE PIGGING STATION–2 (IPS–2) ALONG 18"NB x 307.875 KMS. (APPX.) P/L TO PANISAGAR

SCALE : NTS

DRG. NO. MEC/23UU/05/28/M/002/0006 — REV 1

REV / SEC	
PIPING	
ELEC.	
INST.	
CONCURRED BY	

SECTION–6

DRG. NO. MEC/23UU/05/28/M/002/0016

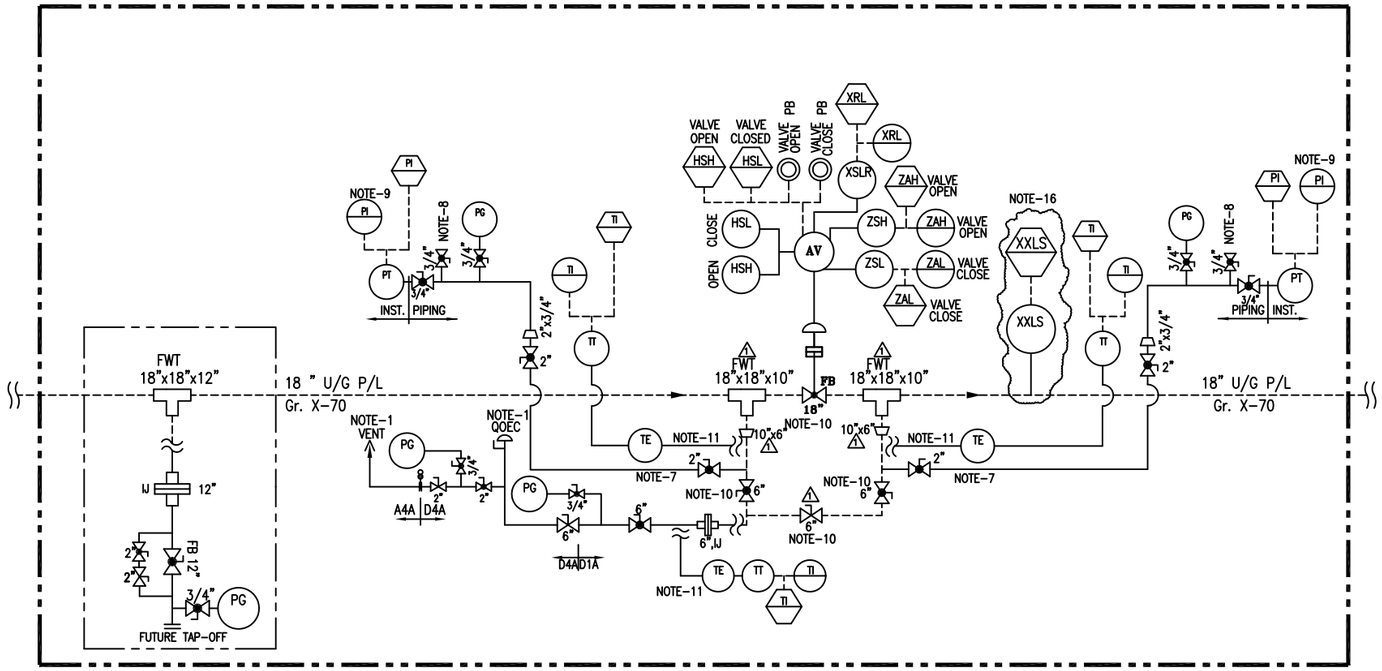

TYPICAL ARRANGEMENT FOR 18" SV (REMOTE OPERATED)

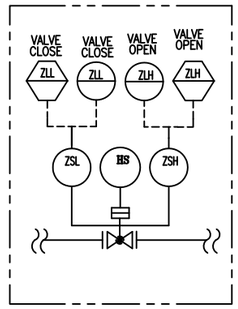

TYPICAL HOV ARRANGEMENT

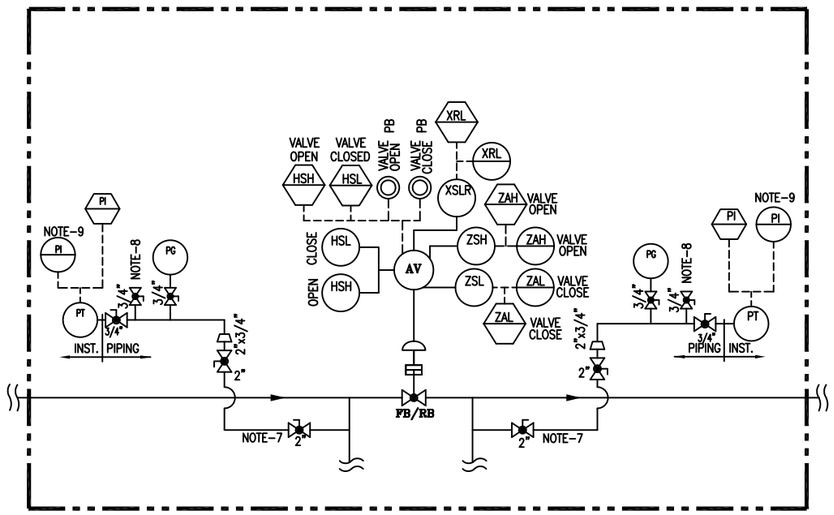

TYPICAL ARRANGEMENT FOR AV

NOTE:-

1. ALL VENT SHALL BE LOCATED MIN. HEIGHT OF 3 MTR. ABOVE THE HIGHEST OPERATING LEVEL.
2. NOTE DELETED.
3. ALL AV (ACTUATED VALVES) SHALL BE FAILED TO STAY PUT TYPE VALVE.
4. NOTE DELETED.
5. NOTE DELETED.
6. NOTE DELETED.
7. ALL PG, PT CONNECTION SHALL BE TAKEN FROM 2" TWO ISOLATION VALVES AND THEN AFTER IT SHOULD BE CONVERTED TO REQUIRE NPT CONNECTION.
8. GAS TAPPING FOR VALVE ACTUATOR.
9. FOR PG & PT DETAIL REFER MECON STANDARD DRG.
10. EXTENDED STEM VALVE.
11. DIRECT SURFACE CONTACT TYPE.
12. ALL BALL VALVES WITH BUTT WELDED END SHALL HAVE FULLY WELDED BODY.
13. ALL HIGHEST POINT & LOWEST POINT OF THE STATION PIPING SHALL BE PROVIDED WITH VENT & DRAIN FACILITY & SAME SHALL BE TAKEN CARE DURING PREPARATION OF GAD.
14. NOTE DELETED.
15. SUPPORT SHALL BE PROVIDED BEFORE & AFTER MAINLINE IJ.
16. NON-INTRUSIVE TYPE PIG SIGNALLER TO BE INSTALLED AT FIRST & LAST SV STATION BEFORE EACH INTERMEDIATE PIGGING STATION/RECEIVING STATION.

LINE LEGEND

PROPOSED LINE A/G
PROPOSED LINE U/G

VALVE LEGEND

BALL VALVE FLANGE END
BALL VALVE BW END/UPTO 1½" SW END.
PLUG VALVE BW END/UPTO 1½" SW END.
PLUG VALVE FLANGE END
GLOBE VALVE.

INDRADHANUSH GAS GRID LIMITED

मेकॉन लिमिटेड

MECON LIMITED

REV / SEC					
	PIPING				
	ELEC.				
	INST.				
	CONCURRED BY				

SECTION-6

REV.NO	DATE	ZONE	DESCRIPTION	BY	VERIFIED
1	18.12.20		AS PER REQUIREMENT	UMAR	AKB
0	26.08.19		AS PER REVISED SCHEMATIC/ GENERAL REVISION	UMAR	AKB
A	20.06.19		FOR COMMENT PURPOSE	UMAR	AKB

REVISION

REFERENCES	DRG.NO.
PIPELINE SCHEMATIC ROUTE DIAGRAM	MEC/23UU/05/28/M/000/0021 , REV – 2, SHEET 6 OF 14

© Copyright MECON LIMITED – All rights reserved.
THIS DRAWING IS THE PROPERTY OF MECON AND ISSUED FOR THE SPECIFIC PROJECT MENTIONED THEREIN. THIS IS NOT TO BE COPIED OR USED FOR OTHER PROJECTS UNLESS EXPRESSLY PERMITTED BY MECON.

SECTION	OIL & GAS
LOCATION	DELHI
DESIGNED	UMAR
DRAWN	UMAR
CHECKED AND VERIFIED	AKB
APPROVED	SIG A. GANGAL
DATE	18.12.20

NORTH EAST GAS GRID (PHASE-II P/L SECTION)

TYPICAL ARRANGEMENT FOR 18" SV (REMOTE OPERATED) STATION, HOV & AV

SCALE : NTS

DRG. NO. MEC/23UU/05/28/M/002/0016

REV 1

DRG. NO. MEC/23UU/05/28/M/002/0017

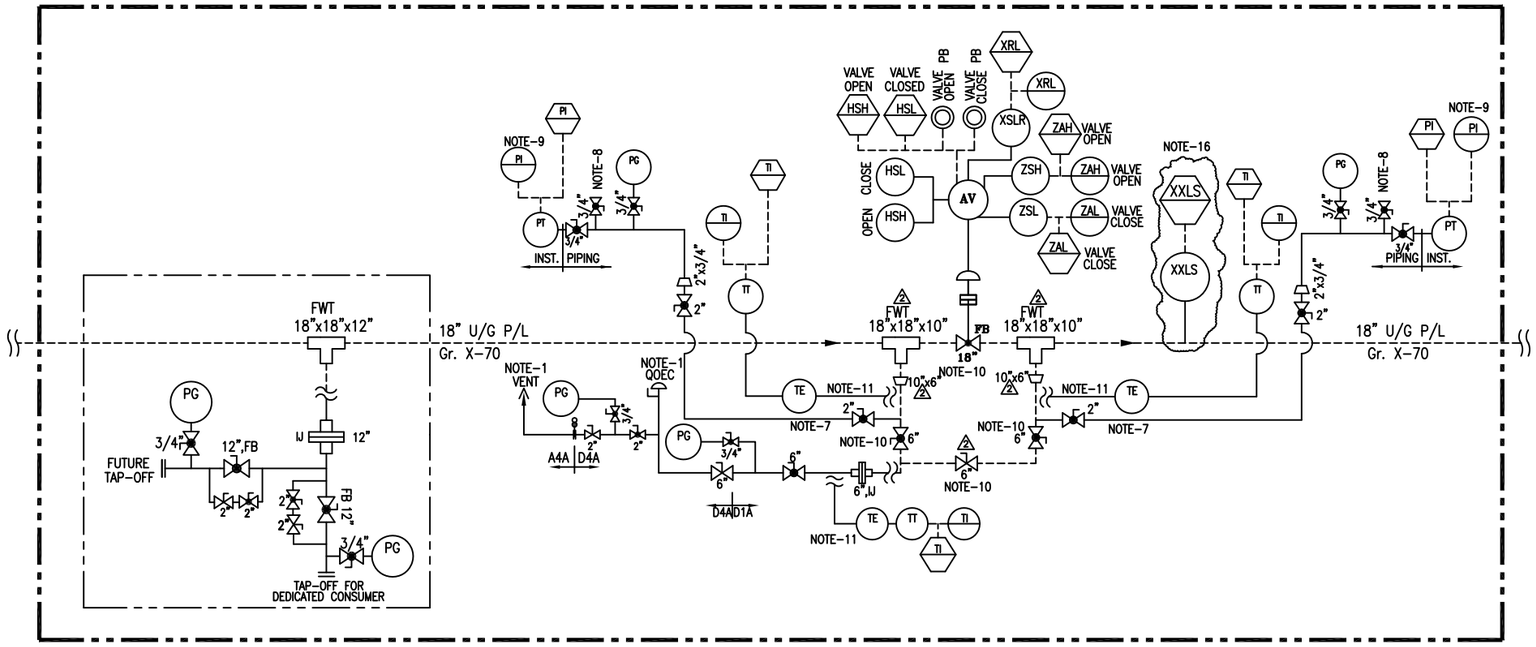

TYPICAL ARRANGEMENT FOR 18" SV WITH AN ADDITIONAL TAP-OFF POINT FOR DEDICATED CONSUMER (REMOTE OPERATED)

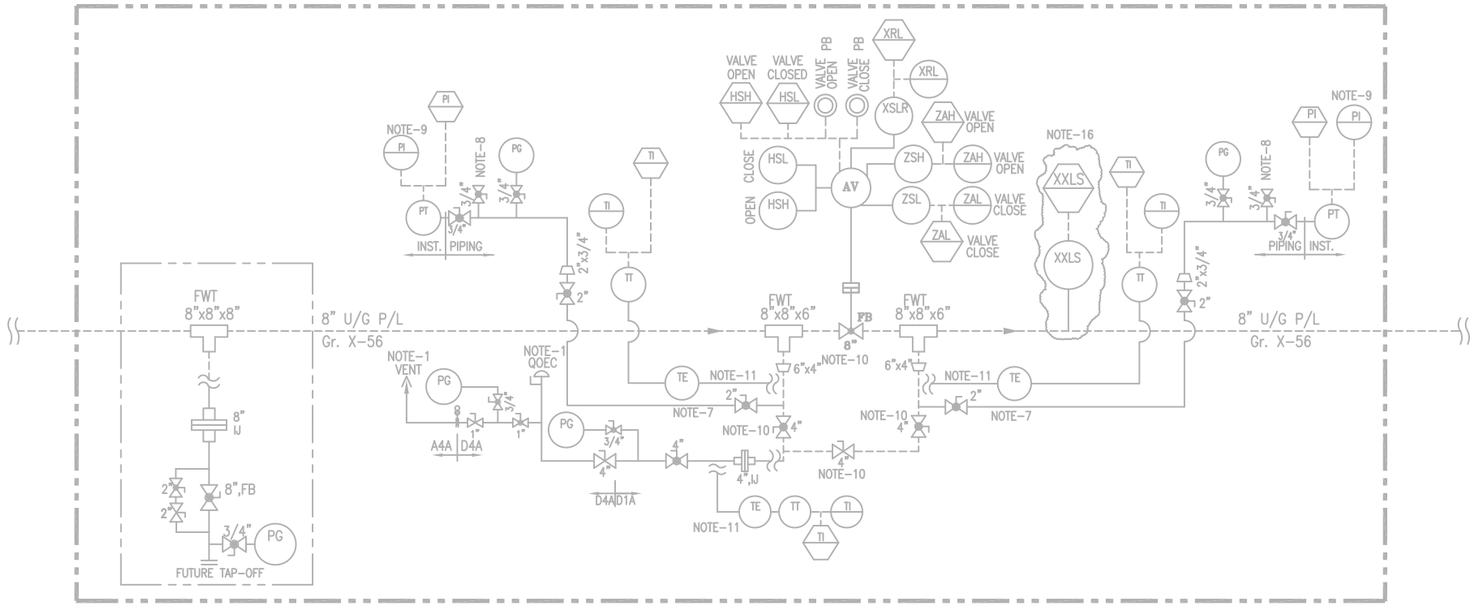

TYPICAL ARRANGEMENT FOR 8"SV (REMOTE OPERATED)

NOTE:-

1. ALL VENT SHALL BE LOCATED MIN. HEIGHT OF 3 MTR. ABOVE THE HIGHEST OPERATING LEVEL.
2. NOTE DELETED.
3. ALL AV (ACTUATED VALVES) SHALL BE FAILED TO STAY PUT TYPE VALVE.
4. NOTE DELETED.
5. NOTE DELETED.
6. NOTE DELETED.
7. ALL PG, PT CONNECTION SHALL BE TAKEN FROM 2" TWO ISOLATION VALVES AND THEN AFTER IT SHOULD BE CONVERTED TO REQUIRE NPT CONNECTION.
8. GAS TAPPING FOR VALVE ACTUATOR.
9. FOR PG & PT DETAIL REFER MECON STANDARD DRG.
10. EXTENDED STEM VALVE.
11. DIRECT SURFACE CONTACT TYPE.
12. ALL BALL VALVES WITH BUTT WELDED END SHALL HAVE FULLY WELDED BODY.
13. ALL HIGHEST POINT & LOWEST POINT OF THE STATION PIPING SHALL BE PROVIDED WITH VENT & DRAIN FACILITY & SAME SHALL BE TAKEN CARE DURING PREPARATION OF GAD.
14. NOTE DELETED.
15. SUPPORT SHALL BE PROVIDED BEFORE & AFTER MAINLINE IJ.
16. NON-INTRUSIVE TYPE PIG SIGNALLER TO BE INSTALLED AT FIRST & LAST SV STATION BEFORE EACH INTERMEDIATE PIGGING STATION/RECEIVING STATION.

LINE LEGEND

- PROPOSED LINE A/G
- PROPOSED LINE U/G
- LINE A/G (OTHER'S SCOPE)
- LINE U/G (OTHER'S SCOPE)

VALVE LEGEND

- BALL VALVE FLANGE END
- BALL VALVE BW END/UPTO 1½" SW END.
- PLUG VALVE BW END/UPTO 1½" SW END.
- PLUG VALVE FLANGE END
- GLOBE VALVE.

INDRADHANUSH GAS GRID LIMITED

मेकॉन लिमिटेड

MECON LIMITED

REV	DATE	ZONE	DESCRIPTION	BY	VERIFIED
2	18.12.20		AS PER REQUIREMENT	UMAR	AKB
1	18.03.20		AS PER REVISED SCHEMATIC/ GENERAL REVISION	RASHMI	AKB
0	26.08.19		AS PER REVISED SCHEMATIC/ GENERAL REVISION	UMAR	AKB
A	20.06.19		FOR COMMENT PURPOSE	UMAR	AKB

REVISION

REFERENCES	DRG.NO.
PIPELINE SCHEMATIC ROUTE DIAGRAM	MEC/23UU/05/28/M/000/0021 , REV – 2, SHEET 6 OF 14

© Copyright MECON LIMITED – All rights reserved.
THIS DRAWING IS THE PROPERTY OF MECON AND ISSUED FOR THE SPECIFIC PROJECT MENTIONED THEREIN. THIS IS NOT TO BE COPIED OR USED FOR OTHER PROJECTS UNLESS EXPRESSLY PERMITTED BY MECON.

SECTION	OIL & GAS
LOCATION	DELHI
DESIGNED	UMAR
DRAWN	UMAR
CHECKED AND VERIFIED	AKB
APPROVED	SIG A. GANGAL
DATE	18.12.20

NORTH EAST GAS GRID (PHASE-II P/L SECTION)

TYPICAL ARRANGEMENT FOR 18" SV STATION WITH AN ADDITIONAL TAP-OFF POINT FOR DEDICATED CONSUMER (REMOTE OPERATED)

SCALE : NTS

DRG. NO. MEC/23UU/05/28/M/002/0017

REV 2

REV / SEC	PIPING	ELEC.	INST.
CONCURRED BY			

SECTION-6

DRG. NO. MEC/23UU/05/28/M/000/0001

SYMBOLS & ABBREVIATIONS

SYMBOLS

- VP–PLUG VALVE
- VB–BALL VALVE WELDED END
- VB–BALL VALVE FLANGED END
- GATE VALVE
- GV–GLOBE VALVE
- PRESSURE RELIEF OR SAFETY VALVE (PSV)
- PRESSURE REGULATING VALVE (PCV) (SELF ACTUATING TYPE)
- NON RETURN VALVE
- CONTROL VALVE WITH SLAM SHUT–OFF VALVE
- SOLENOID VALVE
- GAS ACTUATED ISOLATION VALVE
- GAS ACTUATED ISOLATION VALVE WITH HANDWHEEL
- REDUCER
- FLANGE
- FLAME ARRESTOR (FA)
- RTU — REMOTE TERMINAL UNIT
- DIAPHRAM
- XXLS — PIG SIGNALLER
- VENT
- SPECTACLE BLIND

SYMBOLS

- PD METER
- TURBINE METER
- INSULATION JOINT (IJ)
- FLOW TEE (FWT)
- FIELD MOUNTED INSTRUMENT
- CONTROL PANEL MOUNTED INSTRUMENT
- ULTRASONIC METER
- SCADA INDICATOR, CONTROLLER OR OTHER DEVICES WITH OPERATOR ACCESS TO ADJUSTMENT.

ABBREVIATIONS

AE	ANALYZER SENSOR (GAS CHROMATOGRAPH)
AI	ANALYZER INDICATOR
AT	ANALYZER TRANSMITTER
FY	FLOW COMPUTER
FQI	FLOW TOTALIZER & INDICATOR
LG	LEVEL GAUGE
ZSH/ZSL	LIMIT SWITCHES (OPEN/CLOSE)
TI/TG	TEMPERATURE INDICATOR/ GAUGE
TE	TEMPERATURE ELEMENT
TW	THERMOWELL
DPI/DPG	DIFF. PRESSURE INDICATOR/ GAUGE
DPT	DIFF. PRESSURE TRANSMITTER
PI/PG	PRESSURE INDICATOR/ GAUGE
PT	PRESSURE TRANSMITTER
FC/FO	FAILURE TO CLOSE/OPEN
LO	LOCK OPEN
FIC/PIC	FLOW/PRESS. INDICATING CONTROLLER
I	INTERLOCK
XRL	LOCAL/REMOTE INDICATION
XSL	LOCAL/REMOTE SWITCH
HSH	HAND SWITCH HIGH
HSL	HAND SWITCH LOW
FT	FLOW TRANSMITTER
FE	FLOW ELEMENT
Q.O.E.C.	QUICK OPENING END CLOSURE

ABBREVIATIONS

TT	TEMP TRANSMITTER
FR	FLOW RECORDER
PIR	PRESSURE IND.RECORDER
TIR	TEMP. IND. RECORDER
PSH	PRESSURE SWITCH HIGH
PSL	PRESSURE SWITCH LOW
LSH	LEVEL SWITCH HIGH
LSL	LEVEL SWITCH LOW
LAH	LEVEL ALARM HIGH
LAL	LEVEL ALARM LOW
D	CONDENSATE DRAIN
A1A/B1A	150#/300# RATING
C1A/D1A	400#/600# RATING
LX/PX	PNEUMATIC/ ELECTRIC SIGNAL TRANSMITTER
FB	FULL BORE
SP	SAMPLER
NG	NATURAL GAS
V	VENT
AS	AUTO SAMPLER
CP	CORROSION PROBE
CC	CORROSION COUPON
AV	ACTUATED VALVE
SDV	SHUT DOWN VALVE
LV	LEVEL CONTROL VALVE
PV/PCV	PRESSURE CONTROL VALVE
FCV	FLOW CONTROL VALVE

00”–FLUID–00–00–A1A/B1A/C1A/D1A/D4A

- MATERIAL SPEC.
- LINE NO.
- UNIT NO.
- (P–NATURAL GAS)
- LINE SIZE (NOMINAL)

INDRADHANUSH GAS GRID LIMITED

मेकॉन लिमिटेड

MECON LIMITED

SECTION	OIL & GAS
LOCATION	DELHI
DESIGNED	
DRAWN	SUNIL
CHECKED AND VERIFIED	
APPROVED	SIG / DATE

NORTH EAST GAS GRID (PHASE–II P/L SECTION)

LEGEND / DRAWING SYMBOLS

SCALE : NTS | SHEET 1 OF 2 | REV 0

DRG. NO. MEC/23UU/05/28/M/000/0001

SECTION–5

REV.NO	DATE	ZONE	DESCRIPTION	BY	VERIFIED
			REVISION		

REFERENCES | DRG.NO.

INST. | CONCURRED BY | REV / SEC

© Copyright MECON LIMITED – All rights reserved.

THIS DRAWING IS THE PROPERTY OF MECON AND ISSUED FOR THE SPECIFIC PROJECT MENTIONED THEREIN. THIS IS NOT TO BE COPIED OR USED FOR OTHER PROJECTS UNLESS EXPRESSLY PERMITTED BY MECON.