REVISION RECORD						
Rev.	**Revision Date**	**Prepared by**	**Checked by**	**Approved by**	**Authorized by**	**Revision Description**
00	05.07.2017	MA	MO	RKB	AD	Issued for use as Standard
01	16.10.2019	MA	MO	RKB	SK	
02	28.02.2020	NV	GDS	RKB	SK	New revision system updated
03	31.01.2022	NV	GDS	HK	GW	VCS QMS Integration

Copyright VCS Quality Services Private Limited – All rights reserved

ABBREVIATION

m	Metre
mm	Millimetre
m^2	Square metre
m^3	Cubic Metre
Kg	Kilogram
IS	Indian Standard
BIS	Bureau of Indian Standards
PVC	Poly Vinyl Chloride
PCC	Plain Cement Concrete

Copyright VCS Quality Services Private Limited – All rights reserved

CONTENTS

1.0 SCOPE 5
2.0 REFERENCES 5
3.0 MATERIALS 5
4.0 GENERAL REQUIREMENTS 5
5.0 SPECIFIC REQUIREMENTS 7
6.0 PAYMENT 11

Copyright VCS Quality Services Private Limited – All rights reserved

1.0 SCOPE

This specification establishes the materials, dressing, laying, jointing, workmanship curing etc for stone masonry works and shall comply, with all the requirements of IS: 1597.

2.0 REFERENCES

2.1 BIS CODES

IS: 269	Ordinary Portland cement 33 grade-specification
IS: 455	Portland slag cement-specification
IS: 1129	Recommendation of dressing of Natural building stones
IS: 1597	Construction of stone masonry-code of practice
IS: 2250	Code of practice for preparation and use of masonry mortars
IS: 2750	Specification for scaffoldings

2.2 SPECIFICATIONS

VCS-SS-CS-6021: Materials

3.0 MATERIALS

Refer specification VCS-SS-CS-6021: Materials

4.0 GENERAL REQUIREMENTS

4.1 CEMENT MORTAR

Cement mortar shall meet the requirements of IS: 2250 and shall be prepared by mixing cement and sand by volume. Proportion of cement and sand shall be 1:6 (one part of cement and six parts of sand) or as specified. The sand being used, shall be sieved before use. The mortar shall be used as soon as possible after mixing and before it has begun to set and in any case within initial setting time of cement, after the water is added to the dry mixture. Mortar unused for more than initial setting time of cement shall be rejected and removed from the site of work.

4.1.1 PROPORTIONING

The unit of measurement for cement shall be a bag of cement weighing 50 kgs and this shall be taken as 0.035 cubic metres. Sand shall be measured in boxes of suitable size on the basis of its dry volume. In case of damp sand, its quantity shall be increased suitably to allow for bulkage.

4.1.2 The mixing of mortar shall be done in a mechanical mixer operated manually or by power. The Engineer-in-Charge may however, permit hand mixing, as a special case, taking into account the magnitude, nature and location of work. The Contractor shall take the prior permission of the Engineer-in-Charge in writing, for using hand-mix, before the commencement of work.

Copyright VCS Quality Services Private Limited – All rights reserved

a. Mixing in Mechanical Mixer

Cement and sand in specified proportions, by volume, shall be thoroughly mixed dry in a mixer. Water shall then be added gradually and wet mixing continued for at-least one minute. Care shall be taken not to add more water than that which shall bring the mortar to the consistency of a stiff paste. Wet mix from the mixer shall be unloaded on water-tight masonry platform, made adjacent to the mixer. Platform shall be at least 150mm above the levelled ground, to avoid contact of surrounding earth with the mix. Size of the platform shall be such that it shall extend at-least 300mm alround the loaded wet mix area. Wet mix, so, prepared shall be utilised within initial setting time of cement [thirty (30) minutes either for ordinary portland cement conforming to IS: 269 or for portland slag cement conforming to IS: 455] after addition of water. Mixer shall be cleaned with water each time before suspending the work.

b. Hand Mixing

The measured quantity of sand shall be levelled on a clean masonry platform and cement bags emptied on top. The cement and sand shall be thoroughly mixed dry by being turned over and over, backward and forward, several times till the mixture is of uniform colour. The quantity of dry mix which can be consumed within initial setting time of cement shall then be mixed with just sufficient quantity of water to bring the mortar to the consistency of stiff paste.

4.2 CURING

Green work shall be protected from rain, running water or accumulated water from any source, by suitable means. Masonry work, as it progresses shall be kept thoroughly wet by sprinkling water at regular intervals, on all faces. Curing shall be done after 24 hours of completion of day's work and shall be done for at least 10 days after completion. Proper watering cans with spray nozzles, rubber or PVC pipes shall be used for this purpose.

4.3 STAGING / SCAFFOLDING

4.3.1 Staging/scaffolding shall be properly planned and designed by the Contractor. Use of only steel tubes is permitted for staging/scaffolding. Design of staging/scaffolding shall be submitted for approval of the Engineer-in-Charge, before commencement of work.

Single scaffolding having one set of vertical support, shall be used and other end of the horizontal scaffolding member shall rest in a hole provided in the header course. The supports shall be sound and strongly clamped with the horizontal pieces over which the scaffolding planks shall be fixed. The holes left in the masonry works for supporting the scaffolding shall be filled and made good with plain cement concrete of grade 1:3:6 during plastering. Suitable access shall be provided to the working platform area. The scaffolding shall be strong enough to withstand all loads likely to come upon it and shall also meet all the requirements specified in IS: 2750.

Double scaffolding shall be provided for pillars less than one metre in width or for the first class masonry or for a building having more than two stories.

Copyright VCS Quality Services Private Limited – All rights reserved

The following measures shall also be considered during erection of the scaffolding/staging.

a. Sufficient sills or underpinnings, in addition to base plates, shall be provided, particularly, where scaffoldings are erected on soft grounds.

b. Adjustable bases to compensate for uneven ground shall be used.

c. Proper anchoring of the scaffolding/staging at reasonable intervals shall be provided in each direction with the main structure wherever available.

d. Horizontal braces shall be provided to prevent the scaffolding from rocking.

e. Diagonal braces shall be provided continuously from bottom to top between two adjacent rows of vertical supports.

f. The scaffolding/staging shall be checked at every stage for plumb line.

g. Wherever the scaffolding/staging is found to be out of plumb, it shall be dismantled and re-erected afresh. Effort shall not be made to bring it in line with a physical force.

h. All clamps and couplings shall be properly tightened with nuts and bolts to avoid slippage.

i. Erection work of a scaffolding/staging under no circumstances shall be left totally to semiskilled or skilled workmen and shall be carried out under the supervision of contractor's technically qualified civil engineer.

4.3.2 For smaller works or works in remote areas, wooden ballies may be permitted for scaffolding/staging by the Engineer-in-Charge at his sole discretion. The contractor must ensure the safety and suitability of such works as described under clause 4.3.1 above.

4.4 Embedment of Fixtures

All fixtures, pipes, conduits, holdfasts of doors and windows etc. required to be built in walls, shall be embedded in plain cement concrete of grade 1:3:6 at the required position as the work proceeds.

5.0 SPECIFIC REQUIREMENTS

5.1 RANDOM RUBBLE MASONRY

5.1.1 DRESSING

Stone shall be hammer dressed on the face, the sides and the beds to enable it to come in proximity with the neighboring stone. The "bushing" (projection) on the face shall not be more than 40mm on an exposed face and 19mm on the face to be plastered. It shall not have depression more than 10mm from the average wall surface. It shall also conform to the general requirements for dressing of stones covered in IS: 1129.

Copyright VCS Quality Services Private Limited – All rights reserved

5.1.2 LAYING

All stones shall be wetted before laying to prevent absorption of water from mortar. The stones shall be laid so that the pressure is always perpendicular to the natural bed. The courses (if any) shall be built perpendicular to the pressure which the masonry will bear. In case of battered walls, the base of stone and plane of courses (if any) shall be at right angles to the batter.

The walls shall be carried up truly plumb or to the specified batter. Every stone shall be carefully fitted to the adjacent stones, so as to form neat and close joints. Vertical joints shall be staggered as far as possible.

Stones may be brought to level course at plinth, window sills and roof level. Levelling up at plinth level, window sills and roof level shall be done with concrete comprising of one part of the mortar as used for the masonry and two parts of graded stone aggregate of 20mm nominal size.

The bond shall be obtained by fitting in closely the adjacent stones. Transverse bonds shall be provided by the use of bond stones extended from the front to the back of the wall. At angular junctions the stones at each alternate course shall be well bonded into the respective courses of the adjacent wall.

Face stones shall extend and bond well in the back. These shall be arranged to break joints as much as possible, and to avoid long vertical lines of joints. The depth of stone from the face of the wall, inwards, shall not be less than the height or breadth at the face.

Where there is break in masonry work, the masonry shall be raked in sufficiently long steps for facilitating joining of old and new work. The stepping of the raking shall not be more than 45 degrees with the horizontal. The masonry work shall not be raised more than 1.2 metre per day. Toothed joints in masonry shall not be permitted.

5.1.3 HEARTING STONES

The hearting or interior filling of the wall shall consist of rubble stones which may be of any shape but shall not be less than 150mm on any face. These shall be carefully laid, hammered down with a wooden mallet into position and solidly bedded in mortar. The hearting should be laid nearly level with facing and backing, except that at about one metre intervals, vertical bond stones shall be firmly embedded to form a bond between successive courses.

5.1.4 INSERTION OF CHIPS

The chips and spalls of stones shall be used wherever necessary to avoid thick mortar beds or joints and it shall also be ensured that no hollow spaces are left anywhere in the masonry. The chips shall not be used below the hearting stone to bring these upto the level of face stones. The use of chips shall be restricted to the filling of interstices between the adjacent stones in hearting and this shall in no case exceed 20% of the quantity of stone masonry.

Copyright VCS Quality Services Private Limited – All rights reserved

5.1.5 BOND STONE

Bond or through stone running across the thickness of wall shall be provided in the walls having thickness upto 600mm. If the walls are thicker than 600 mm, two or more bond stones overlapping each other by at least 150mm shall be provided in a line from face to back. Atleast one bond stone or a set of bond stones shall be provided for every 0.5 sq.m of wall surface. These shall be provided at 1.5m to 1.8m apart clear in every course and shall be staggered in subsequent course. An identification mark for the bond stones shall be given on both faces.

5.1.6 QUOINS

The quoins shall be of selected stones neatly dressed to the required angle and shall be of the same height as the course in which they occur and laid header and stretcher alternately. The quoin stone shall not be less than 0.03 cubic metres in volume.

5.1.7 JOINTING

Stones shall be so laid that all joints are fully packed with mortar. Face joints shall be minimum 20mm thick. The joints shall be struck flush and finished at the time of laying; when plastering and pointing is not required. If walls are to be plastered or pointed, joints shall be raked to a minimum depth of 20mm during the progress of work when the mortar is still green. For the faces of the wall which are not to be plastered, stone surfaces shall be cleared of mortar splashing to give uniform stone appearance.

5.2 COURSED RUBBLE MASONRY

5.2.1 DRESSING

Face stones shall be hammer dressed on all beds and joints so as to give them approximately rectangular shape. These shall be square on all joints and beds. The bed joints shall be chisel drafted for atleast 80mm back from the face and for the side joints atleast 40mm. No portion of the dressed surface shall show a depth of gap more than 6mm from a straight edge placed on it. The remaining unexposed portion of the stone shall not project beyond the surface of the bed and side joints. The bushing on the face shall not be more than 40mm on an exposed face and 10mm on the face to be plastered.

The hammer dressed stone shall also have a rough tooling for a minimum width of 25mm along the four edges of the face of the stone for the exposed stone masonry work.

5.2.2 LAYING

All stones shall be wetted before laying to prevent absorption of water from mortar. The stones shall be laid so that the pressure is always perpendicular to the natural bed. The courses shall be built perpendicular to the pressure which the masonry will bear. In case of battered walls, the base of stone and plane of courses shall be at right angles to the batter.

 Copyright VCS Quality Services Private Limited – All rights reserved

The walls shall be carried up truly plumb or to the specified batter. Every stone shall be carefully fitted to the adjacent stones, so as to form neat and close joints. All courses shall be laid truly horizontal and all vertical joints shall be truly vertical. The quoin stones shall be laid stretchers and headers alternately and shall be laid square on their beds, which shall be rough chisel dressed to a depth of atleast 100mm.

All courses shall be laid truly horizontal and all vertical joints shall be truly vertical. The stones shall be laid in horizontal courses and each course shall be of equal height of not less than 150mm and more than 300mm.

Levelling at plinth level, window sills and roof level shall be done with concrete comprising of one part of the mortar as used for the masonry and two parts of graded stone aggregate of 20 mm nominal size.

The bond shall be obtained by fitting in closely the adjacent stones. Transverse bonds shall be provided by the use of bond stones extended from the front to the back of the wall. At angular junctions the stones at each alternate course shall be well bonded into the respective courses of the adjacent wall.

Face stones shall extend and bond well in the back. These shall be arranged to break joints as much as possible, and to avoid long vertical lines of joints. The depth of stone from face of the wall, inwards, shall not be less than the height or breadth at the face.

Where there is a break in masonry work, the masonry shall be raked in sufficiently long steps for facilitating joining of old and new work. The stepping of the raking shall not be more than 45 degrees with the horizontal. The toothed joints shall not be permitted. The masonry work shall not be raised more than 1.2 metres per day.

5.2.3 HEARTING STONES

The hearting or the interior filling of the wall shall consist of flat bedded stone carefully laid on their proper beds in mortar. The use of chips shall be restricted to the filling of interstices between the adjacent stones in hearting and these shall not exceed 10% of the quantity of masonry. While using chips it shall be ensured that no hollow spaces are left anywhere in the masonry.

5.2.4 FACE STONES

Face stones shall tail into the work for not less than their heights and atleast one thirds of the stones shall tail into the work for a length not less than twice their height. These should be laid headers and stretchers.

5.2.5 BOND STONE

Same as for random rubble masonry given under clause no. 5.1.5 except that a bond stone or a set of bond stones shall be inserted 1.5 to 1.8 meter apart, in every course and shall be staggered in subsequent layers.

5.2.6 QUOINS

Copyright VCS Quality Services Private Limited – All rights reserved

The quoins shall be of the same height as the course in which these occur and shall not be less than 450mm in any direction.

5.2.7 JOINTS

All bed joints shall be horizontal and all side joints vertical. All joints shall be full of mortar. Face joints shall not be more than 10mm thick. When plastering and pointing is not required to be done, the joints shall be struck flush and finished at the time of laying, otherwise the joints shall be raked to a minimum depth of 20mm during the progress of work when the mortar is still green. The joint shall be either flush or struck. Raised or cut pointing, shall be done with cement mortar 1:3 using wooden mould/template of minimum 12mm depth for uniformity.

6.0 PAYMENT

This clause shall apply to item rate tender only.

The payment for stone masonry works shall be inclusive of all labour, material, sampling and testing, scaffolding/staging, dressing, wetting out of stones, laying etc., raking of joints, curing, pointing, providing recesses and making circular or rectangular openings, sealing the gap between the masonry and soffit or beam/slab with and including cement mortar, making of masonry platform for unloading the wet mix, embedding fixtures/fittings including providing PCC(1:3:6) etc., for all heights and depths Deductions for circular or rectangular openings or for making pockets shall be as per relevant BIS Codes.

6.1.1 Payment for random rubble stone/course rubble masonry works shall be made on cubic metre basis on the volume of work done, to be measured as per relevant BIS Codes.

Copyright VCS Quality Services Private Limited – All rights reserved

Energising Quality

VCS Quality Services Pvt Ltd

STANDARD SPECIFICATION
FOR
DEMOLITION AND DISMANTLING

VCS-SS-CS-6029

03	31.01.2022	NV	GDS	HK	GW
02	28.02.2020	NV	GDS	RKB	SK
01	16.10.2019	MA	MO	AD	SK
00	05.07.2017	MA	MO	AD	SK
Rev. No	Date	Prepared By	Checked By	Approved By	Authorized By

UNCONTROLLED COPY	:	**If printed**
CONTROLLED COPY	:	**If in soft and signed**

Copyright VCS Quality Services Private Limited – All rights reserved

REVISION RECORD						
Rev.	**Revision Date**	**Prepared by**	**Checked by**	**Approved by**	**Authorized by**	**Revision Description**
00	05.07.2017	MA	MO	RKB	AD	Issued for use as Standard
01	16.10.2019	MA	MO	RKB	SK	
02	28.02.2020	NV	GDS	RKB	SK	New revision system updated
03	31.01.2022	NV	GDS	HK	GW	VCS QMS Integration

Copyright VCS Quality Services Private Limited – All rights reserved

ABBREVIATION

m	Metre
mm	Millimetre
Sqm	Square Metre
Cum	Cubic Metre

Copyright VCS Quality Services Private Limited – All rights reserved

CONTENTS

1.0 SCOPE 5
2.0 REFERENCES 5
3.0 GENERAL 5
4.0 SAFETY PRECAUTIONS 5
5.0 PROCEDURE 6
6.0 CLEANING & STACKING 7
7.0 DISPOSAL 7
8.0 PAYMENT 7

Copyright VCS Quality Services Private Limited – All rights reserved

1.0 SCOPE

This specification covers the procedure and safety requirements for demolition and dismantling of masonry (Brick & Stone), concrete (Plain /Reinforced), structural steel (sheeted / un sheeted) works.

2.0 REFERENCES

2.1 Specification No. VCS-SS-CS-6002, Earth work in site grading

2.2 VCS-SS-CS-6003, Earth work for Underground piping

2.3 VCS-SS-CS-6022, Earth work in foundations

for Earth work.

3.0 GENERAL

3.1 Apart from this specification, the demolition and dismantling of structures (part or whole) shall be in compliance with all statutory safety regulations and any other special requirement as shown/noted on the drawings and General Conditions of Contract. Prior consent and approval of the Engineer-in-charge shall be obtained in writing before starting any dismantling works. Any restrictions imposed regarding working hours shall also be strictly followed by the Contractor.

3.2 All materials obtained from dismantling/demolition operations shall be the property of the Owner unless otherwise specified and shall be kept in safe custody until handed over to the Engineer-in-charge.

3.3 Where it becomes necessary to disconnect any existing service line(s) (such as electrical, piping etc.) during dismantling/demolishing operation and where so required by the Engineer-charge, suitable alternate arrangement shall be made by the Contractor to maintain the continuity and proper functioning of the affected service line(s) with the approval of the Engineer-in-charge at no extra cost to the Owner.

4.0 SAFETY PRECAUTIONS

4.1 The Contractor shall adhere to safe demolishing/dismantling practices at all stages of work to guard against accidents, hazardous and unsafe working procedures.

4.2 Necessary propping, shoring strutting and/or underpinning shall be done for the safety of all surrounding structures (whose safety is likely to be endangered) before taking up, the demolishing and dismantling work.

4.3 Temporary enclosures made out of GI sheets, fencings, danger lights etc. shall be provided by the Contractor and got approved by the Engineer-in-charge before start of work to prevent accidents.

4.4 Contractor must ensure the availability of adequate firefighting equipment / arrangements before starting actual demolishing/dismantling works. These facilities

Copyright VCS Quality Services Private Limited – All rights reserved

shall be made available throughout the entire operation of demolition and dismantling of structures.

4.5 All equipment's, pipes, fittings and instruments, underground utilities etc. located in the vicinity shall be protected by suitable means, as decided by the Engineer-in-charge, during demolishing, dismantling operations.

4.6 Roads and working spaces shall be kept free of any debris/dismantled materials at the end of day's work.

4.7 Necessary measures shall be taken to keep the dust and noise nuisance to minimum levels.

4.8 Dismantled elements/components shall not be dropped from a height or thrown from a distance. Dismantling of elements fixed by screws/bolts/hooks etc. shall be done by taking out the fixtures with proper tools only. Such fixtures may be allowed to be cut by sawing or flame cutting, in the event of their being stuck-up due to corrosion etc. however the decision of Engineer-in-charge in this regard shall be final and binding, Welds shall be removed by flame cutting. Tearing or ripping of elements shall not be resorted to under any condition.

5.0 PROCEDURE

5.1 Entire work of demolishing & dismantling shall be meticulously planned. Prior to start of work, the Contractor shall thoroughly understand the scope and nature of the work, and then prepare and submit the proposed work execution plan of demolishing & dismantling to the Engineer-charge for his review. Comments if any, shall be taken care by the contractor and execution of the work shall be done based on the revised execution plan.

5.2 Demolition and dismantling shall be restricted to the extent shown on drawings or as directed by the Engineer-in-charge.

5.3 Demolition of any structure shall be carried out in the sequence reverse to that followed at the time of its construction.

5.4 Dismantling shall be done in a systematic manner. All elements shall be carefully removed without causing any damage.

5.5 Blasting in any form shall not be permitted.

5.6 Chipping of concrete/grout shall be done with precision by chiseling. The finished surfaces shall be made true to the requisite size and shape.

5.7 Pockets/holes of specified size shall be made/cut by drilling/chiseling.

Copyright VCS Quality Services Private Limited – All rights reserved

6.0 CLEANING & STACKING

6.1 All demolished/dismantled serviceable materials such as bricks, stones, reinforcement bars, structural steel, sheeting etc. shall be separated out, cleaned and stacked in separate lots within the plant boundary as directed by the Engineer-in-charge.

7.0 DISPOSAL

All unserviceable materials shall be disposed off in spoil heaps within or outside the plant boundary as per the directions of the Engineer-in-charge. Areas required outside the plant boundary for dumping of disposed material shall be arranged by the contractor and got approved by the Engineer-in- charge.

8.0 PAYMENT

This clause shall be applicable for item tender rate only.

8.1 GENERAL

Measurement of all works shall be taken prior to start of demolishing / chipping / dismantling works.

8.2 MASONRY/CONCRETE WORKS (DEMOLITION)

8.2.1 Payment shall be made on the basis of actual volume in cubic meters (cu.m.) of masonry/concrete works demolished. The thickness of plaster/bitumen felt shall be included in measurements. The rate for demolishing shall include supply of labour, tools & tackles, necessary safety measures, propping, underpinning, scaffolding, handling, cutting, straightening, scraping & cleaning of reinforcement bars and other embedment's (in case of reinforced concrete works), sorting out and stacking of all serviceable materials, disposal of all unserviceable material, clearing the site, etc. all complete as specified and directed by the Engineer-in-charge.

8.3 EXCAVATION & BACKFILLING

8.3.1 Excavation and backfilling shall be paid separately as per relevant clauses of specification No. VCS-SS-CS-6002, VCS-SS-CS-6003, VCS-SS-CS-6022 for Earth Work.

8.4 CHIPPING OF CONCRETE WORKS

Payment shall be made on the basis of admissible area in square meters (sq.m.) of concrete surfaces chipped, pertaining to the different categories of thicknesses specified in the schedule of items.

The rate for chipping shall include supply of labour, tools and tackles, necessary safety measures, scaffolding, chiseling, handling exposing, cutting, straightening, scraping, clearing the reinforcement bars (in case of reinforced concrete works), wire brushing and washing the exposed surfaces, disposal of all unserviceable material etc. all complete as directed.

8.5 MAKING POCKETS/HOLES IN CONCRETE WORKS

Copyright VCS Quality Services Private Limited – All rights reserved

Payment shall be made on the basis of number (Each) of pockets/holes of sizes up to & inclusive of 200x200x500 mm, made or cut in the concrete works.

The rate for making pockets/holes shall include supply of labour, tools & tackles, necessary safety measures, scaffolding, chiseling, drilling, handling, cutting or relocating reinforcement bars, cleaning, disposal of all unserviceable material etc. all complete as directed.

8.6 DISMANTLING OF STRUCTURAL STEEL WORKS

Payment shall be made on the basis of weight (MT) of the structure/components being dismantled. Assessment of weight shall be done as per the specifications or as per the direction of Engineer-in-charge.

The rate for dismantling shall include supply of labour, tools and tackles, equipment, consumables, necessary safety measures, scaffolding, propping, handling, unbolting, cutting (by sawing or flame cutting) of gussets/plates/bolts/hooks/welds, cleaning, sorting out and stacking of all serviceable materials, disposal of all unserviceable material, etc. all complete as specified and directed.

8.7 DISMANTLING OF ROOF & WALL SHEETING

Payment shall be made on the basis of dismantled sheeted area in square meters (sq.m.) of plan area in case of roof sheeting and area in elevation in case of side and louver sheeting.

The rate for dismantling shall include supply of labour, tools and tackles, equipments, consumables, necessary safety measures, handling, scaffolding, unbolting, cutting (by saw or l flame cutting) of hook bolts, removal of ridges, gutters, flashings, transporting, stacking of all serviceable materials, disposal of all unserviceable material etc. all complete as directed.

Copyright VCS Quality Services Private Limited – All rights reserved

Energising Quality

VCS Quality Services Pvt Ltd

STANDARD SPECIFICATION
FOR
MISCELLANEOUS ITEMS

VCS-SS-CS-6030

Rev. No	Date	Prepared By	Checked By	Approved By	Authorized By
03	31.01.2022	NV	GDS	HK	GW
02	28.02.2020	NV	GDS	RKB	SK
01	16.10.2019	MA	MO	AD	SK
00	05.07.2017	MA	MO	AD	SK

UNCONTROLLED COPY	:	**If printed**
CONTROLLED COPY	:	**If in soft and signed**

Copyright VCS Quality Services Private Limited – All rights reserved

REVISION RECORD						
Rev.	**Revision Date**	**Prepared by**	**Checked by**	**Approved by**	**Authorized by**	**Revision Description**
00	05.07.2017	MA	MO	RKB	AD	Issued for use as Standard
01	16.10.2019	MA	MO	RKB	SK	
02	28.02.2020	NV	GDS	RKB	SK	New revision system updated
03	31.01.2022	NV	GDS	HK	GW	VCS QMS Integration

Copyright VCS Quality Services Private Limited – All rights reserved

ABBREVIATION

m	Metre
mm	Millimetre
m^2	Square Metre
Kg/m^2	Kilogram Per Square Metre
IS	Indian Standard
BIS	Bureau of Indian Standards
RCC	Reinforced Cement Concrete

Copyright VCS Quality Services Private Limited – All rights reserved

CONTENTS

1.0 SCOPE 5
2.0 REFERENCES 5
3.0 MATERIALS 5
4.0 GENERAL REQUIREMENTS 5
5.0 PRE-CONSTRUCTIONAL ANTI-TERMITE TREATMENT 5
6.0 DRESSING & TRIMMING 7
7.0 CUTTING PILE HEADS 7
8.0 BUILDING-UP PILE HEADS 8
9.0 HARD CORE 9
10.0 SAND FILLING IN PLINTH/FOUNDATIONS 9
11.0 DAMP PROOF COURSE - (DPC) 10

Copyright VCS Quality Services Private Limited – All rights reserved

1.0 SCOPE

The scope shall be as specified separately for different items below.

2.0 REFERENCES

2.1 BIS CODES

IS:73 Paving bitumen-specification

IS:383 Coarse and fine aggregates for concrete Specification

IS:6313 Code of practice Ant termite measuring in building

2.2 SPECIFICATIONS

VCS-SS-CS-6021, Materials

VCS-SS-CS-6023, Plain and Reinforced Cement Concrete

3.0 MATERIALS

The materials shall be as specified separately for different items below.

4.0 GENERAL REQUIREMENTS

4.1 The Contractor shall test the materials, where applicable, in approved laboratory as required by the Engineer-in-Charge and furnish test certificates for materials and obtain the approval of the Engineer-in- Charge prior to the use of such materials in the works. All tests shall be in accordance with relevant Indian Standards.

5.0 PRE-CONSTRUCTIONAL ANTI-TERMITE TREATMENT

5.1 SCOPE

This specification establishes the materials and method of accomplishing pre-constructional anti-termite treatment of soil for protection of buildings against attack by subterranean termites with the usage of chemical emulsions in accordance with the procedure laid down.

5.2 MATERIALS

Refer specification no. VCS-SS-CS-6021.

5.3 PROCEDURE FOR TREATMENT

5.3.1 The treatment shall be carried out by an approved agency specialized in the field. Apart from this t his specification, the work shall be carried out in compliance with IS: 6313. In case of any contradiction, this specification shall govern.

5.3.2 SITE PREPARATION

 Copyright VCS Quality Services Private Limited – All rights reserved

Prior to start of chemical treatment, area(s) shall be made free from logs, stumps timber, off cuts, leveling pegs, roots of plants/trees etc. Soil treatment shall start when foundation trenches/pits are ready to take concrete/masonry in foundations and plinth area ready for laying the subgrade. Treatment shall not be carried out when it is raining or the subsoil water level is at the same or higher than the level of treatment. In the event of water-logging of foundations, the water shall be pumped out and the chemical emulsion applied when the soil is absorbent.

5.3.3 TREATMENT OF THE EXCAVATED PITS/TRENCHES AND BACKFILL FOR FOUNDATIONS

a. The bottom surface and the lower 300 mm side surfaces of the excavated pits/trenches for foundations of masonry works and RCC plinth beams supporting such masonry works, shall be treated with specified chemical emulsion @ 5 litres/m2 of the surface area. However, no such treatment shall be required in case of pits/trenches made for RCC foundations supporting RCC walls and/or columns.

b. On completion of construction of masonry foundations, the backfill in immediate contact with the substructure shall be treated in layers, of 300mm, with emulsion @7.5 litres/m2 of the vertical surface of the substructure (i.e.7.5x 0.300 = 2.25 litres/meter of perimeter) for each side. The treatment shall be given after ramming of each layer of soil, by rodding the earth at 150mm centres close to the wall surface and working the rod backward and forward (parallel to the wall surface) and then spraying the specified dosage of emulsion. The emulsion shall be directed towards the masonry surfaces so that the soil in contact with these surfaces is well treated with the chemical. After the treatment, the soil shall be tamped back into place. This shall be done for full depth of the fill.

c. For RCC walls and columns, the treatment as specified in (b) shall start from a depth 500 mm below the finished ground level, and shall be done upto the FGL.

5.3.4 TREATMENT OF PLINTH/BASEMENT AND APRON

a. The top surface of the consolidated earth below the non-suspended floor slabs and the peripheral aprons of widths upto 750mm, the bottom surface and side surfaces of the excavated pits for the basements shall be treated with chemical emulsion @5 litres/m2 of the surface area. Holes 50 to 75mm deep at 150mm centres, both ways, shall be made on the surface with 12mm diameter mild steel rod and then emulsion shall be sprayed uniformly over the area. At expansion joint locations, anti-termite treatment shall be supplemented by treating through the expansion joint @ 2.0 litres per linear metre of joint after the subgrade has been laid.

b. Treatment of Junctions of plinth filling and wall/column faces shall be done after making a small channel 30mmx30mm, by making rod holes 150mm apart (upto the ground level) in the channel and then by moving the rod backward and forward to break up the earth. The chemical emulsion shall be poured along the channel @7.5 litres/m2 of the vertical wall/column surface so as to soak the soil right to the bottom. The soil shall be tamped back into place after the treatment.

Copyright VCS Quality Services Private Limited – All rights reserved

5.3.5 TREATMENT OF SOIL ALONG EXTERNAL PERIMETER OF BUILDING

After the building is complete, the earth along the external perimeter shall be rodded at intervals of 150mm and to depth of 300mm. The rod shall be moved backward and forward parallel to the wall to break up the earth and chemical emulsion poured along the wall @ 7.5 litres/m2 of vertical surface (i.e. 7.5 x 0.300 = 2.25 litres/metre of perimeter). After the treatment, the earth shall be tamped back into place.

5.4 PAYMENT

This clause shall apply to item rate tenders only.

Payment for pre-constructional anti-termite treatment shall be made on square metre (sq.m.) basis of plinth area of the building at ground floor only.

The rate shall include supplying all materials, spray pumps, tools, tackles & other accessories, labour, site preparation, rodding, tamping, mixing, spraying the specified chemical emulsion at prescribed dosage, storage facilities, handling, transporting etc. all complete as directed & specified.

6.0 DRESSING & TRIMMING

6.1 SCOPE

This specification covers the procedure for dressing, trimming and paving with earth the peripheral area around the completed building/structure.

6.2 PROCEDURE

The ground all around the completed building/structure for 3 metres width or as specified by the Engineer-in-Charge, shall be cleaned and dressed to suitable slope. Over the prepared ground a layer of approved earth shall be spread, watered and well consolidated so as to achieve an average thickness of 75mm.

6.3 PAYMENT

This clause shall apply to item rate tenders only.

Payment shall be made on square metre (sq.m.) basis of the actual area dressed and paved with earth.

The rate shall include supplying all materials, labour including cleaning, dressing the ground to required slope, spreading of earth, watering, ramming, consolidating etc. all complete as directed.

7.0 CUTTING PILE HEADS

7.1 SCOPE

This specification covers procedure for cutting pile heads of cast-in-situ RCC piles.

7.2 PROCEDURE

Copyright VCS Quality Services Private Limited – All rights reserved

Head of already cast RCC piles shall be cut after 28 days of casting up to a length and elevation as shown on the drawing by chiseling taking all necessary safety precautions. Care shall be taken that pile reinforcement is not cut or damaged during chiseling operation. All debris and loose or cracked concrete in the pile shall be removed and disposed off within the plant boundary as per the directions of the Engineer-in-Charge and site shall be left clean for casting of pile caps. The surface of reinforcement bars shall be cleaned, if required by wire brushing, so that no old concrete sticks to them.

7.3 PAYMENT

This clause shall apply to item rate tenders only.

Payment shall be made per pile basis for the actual number of pile heads cut.

The rate shall include supplying all tools and tackles, labour including disposal of debris, bending the pile reinforcements for proper anchorage within the pile cap etc. all complete as directed.

8.0 BUILDING-UP PILE HEADS

8.1 SCOPE

This specification covers requirements of materials and procedure for building-up of RCC Pile Heads.

8.2 MATERIALS

8.2.1 Concrete shall be of the same grade & specification as that for the pile.

8.2.2 Reinforcement shall be of the same grade and specification as that for the pile.

8.2.3 Type of cement shall be same as that used for the pile.

8.3 PROCEDURE

Concrete in existing piles shall be chiseled off minimum upto the lap-length of the reinforcements in the pile. In cases where reinforcements are longer than the concreted piles, the top concrete of the existing piles shall be chiseled off upto a length of 800mm.

Concrete surface and reinforcement of pile shall be cleaned of any dirt grease, debris etc and concrete surface shall be made rough by hacking. Reinforcement shall be lapped/welded as per the direction of the Engineer-in-Charge. Neat cement slurry shall be applied on top surface of concrete and using approved formwork concreting shall be done upto the level shown on the drawing or as directed by the Engineer-in-Charge.

8.4 PAYMENT

This clause shall apply to item rate tenders only.

Copyright VCS Quality Services Private Limited – All rights reserved

Payment shall be made on cubic metre basis for the total quantity of concrete actually poured for achieving the level as shown on drawings.

The rate shall include supply of all materials (except reinforcement which shall be paid separately as per respective item) labour, cleaning, welding, shuttering, vibrating, finishing, curing etc. all complete. Cutting of pile heads and excavation including backfilling shall be paid separately as per respective item.

9.0 HARD CORE

9.1 SCOPE

This specification covers the requirements of materials and procedure for laying of hard core.

9.2 MATERIALS

Hard core shall consist of broken/crushed stones of 150mm and down size. Stones shall be sound, angular, hard and free from flakes, dust and other impurities.

9.3 PROCEDURE

Hard core shall be laid to the grade, level and thickness as shown on the drawing. Broken stones of required height shall be vertically placed and blinded with approved murrum/sand and consolidated with roller including watering, dressing etc. However, areas inaccessible by roller may be compacted by hand rammer.

9.4 PAYMENT

This clause shall apply to item rate tenders only.

The hard core shall be measured on the basis of volume in cubic metres (cu.m.) of the compacted hard core laid. The rate shall include all labour, materials, consolidation by rammer/roller, watering, dressing etc. all complete.

10.0 SAND FILLING IN PLINTH/FOUNDATIONS

10.1 For specification of sand to be used for filling, reference shall be made to specification No. VCS-SS-CS-6002,

10.2 Filling shall be carried out in layers not exceeding 15cros and shall be compacted mechanically or by saturation to specified grade and level and to obtain 90% laboratory maximum dry density or as specified in schedule of rates.

10.3 Compaction by flooding may be accepted at the discretion of the Engineer-in-Charge, provided the required compaction is achieved.

10.4 The Contractor shall not commence filling in and around any work until it has been permitted by the Engineer-in-Charge.

10.5 PAYMENT

Copyright VCS Quality Services Private Limited – All rights reserved

This clause shall apply to item rate tenders only.

Payment shall be made on cubic metre (cu.m.) basis of the finished compact volume. The rate shall include cost of sand for any compacted thickness, wastage if any, all handling, transport for all leads, tamping, watering, flooding, dressing etc. Any brick work required for ponding shall be paid separately under relevant item.

11.0 DAMP PROOF COURSE - (DPC)

11.1 All materials used for Damp Proof Course shall comply with specification No. VCS-SS-CS-6021.

11.2 The 40mm thick Damp Proof Course shall consist of plain cement concrete of grade M-20, unless otherwise specified.

11.3 The Damp Proof Course shall be laid at plinth level of masonry walls, flush with the floor surface and shall not be carried across doorways.

11.4 Before laying, the top surface of wall shall be thoroughly cleaned and watered. The D.P.C. shall be laid in layers of 20mm thickness retaining the edges by necessary formwork and shall be well tamped and trowelled to smooth finish. The layer shall be cured by keeping the surface wet for 40 hours and after it has dried, two coats of hot bitumen of grade A120/S120 conforming to IS: 73 shall be applied over it at the rate of 1.7 Kg/m2. Over this, the second layer of 20mm thick concrete shall be laid and cured as described in case of the first layer and two coats of hot bitumen at the rate of 1.7 Kg/m2 shall be applied again in a similar manner. Over this, dry sharp sand shall be sprinkled evenly before hardening of second coat of bitumen paint.

11.5 PAYMENT

This clause shall apply to item rate tenders only.

Payment shall be made on square metre (sq.m.) basis of the area laid. The rate shall be inclusive of formwork, curing, providing and laying bitumen, supplying and spreading sand over bitumen etc. complete.

Copyright VCS Quality Services Private Limited – All rights reserved

Energising Quality

VCS Quality Services Pvt Ltd

STANDARD SPECIFICATION
FOR
SOIL INVESTIGATIONS

VCS-SS-CS-6031

03	31.01.2022	NV	GDS	HK	GW
02	28.02.2020	NV	GDS	RKB	SK
01	16.10.2019	MA	MO	AD	SK
00	05.07.2017	MA	MO	AD	SK
Rev. No	Date	Prepared By	Checked By	Approved By	Authorized By

UNCONTROLLED COPY	:	**If printed**
CONTROLLED COPY	:	**If in soft and signed**

Copyright VCS Quality Services Private Limited – All rights reserved

REVISION RECORD						
Rev.	**Revision Date**	**Prepared by**	**Checked by**	**Approved by**	**Authorized by**	**Revision Description**
00	05.07.2017	MA	MO	RKB	AD	Issued for use as Standard
01	16.10.2019	MA	MO	RKB	SK	
02	28.02.2020	NV	GDS	RKB	SK	New revision system updated
03	31.01.2022	NV	GDS	HK	GW	VCS QMS Integration

Copyright VCS Quality Services Private Limited – All rights reserved

ABBREVIATION

m	Metre
mm	Millimetre
Cm	Centimetre
Kg/cm^2	Kilogram Per Square Centimetre
IS	Indian Standard
Kg	Kilogram
°/sec	Degree /second

Copyright VCS Quality Services Private Limited – All rights reserved

CONTENTS

1.0 SCOPE 5
2.0 REFERENCE 5
3.0 SOIL INVESTIGATIONS 5
4.0 LABORATORY TESTING OF SOILS 19
5.0 REPORT 20
6.0 ANNEXURE – A 22
7.0 ANNEXURE - B 24
8.0 ANNEXURE-C 25
9.0 ANNEXURE -D 27
10.0 ANNEXURE-E 28
11.0 ANNEXURE - F 30
12.0 ANNEXURE G 31

Copyright VCS Quality Services Private Limited – All rights reserved

1.0 SCOPE

1.1 These specifications cover the procedure for soil investigations for foundation

1.2 The work shall be carried out in accordance with the specification set out below and as directed by the Engineer-in-Charge, wherever necessary.

2.0 REFERENCE

2.1 These specifications conform to the Indian Standards on Soils and Foundations as given in ANNEXURE- A.

2.2 Reference to any code in these specifications shall mean the latest revision of the code unless otherwise mentioned. In the event of any conflict between the requirements in these specifications and the referred codes, the former shall govern.

3.0 SOIL INVESTIGATIONS

3.1 Boring

Boring shall be carried out in accordance with the provisions of IS: 1892 and as per the specifications given below:

3.1.1 AUGER BORING

3.1.1.1 Augers shall be of helical or post type and may be manually or power operated. Beyond 5 meters depth, below ground, only power operated rig shall be used. The diameter of the hole shall be minimum 100 mm and preferably 150 mm.

3.1.1.2 Uncased holes shall be permitted only upto a depth where the sides of the hole can stand unsupported. In case side fall is noticed, steps shall be taken immediately to stabilize the holes by using bentonite slurry or by casing pipes as directed by the Engineer-in-Charge.

3.1.1.3 No water shall be added while boring through cohesive soils and cohesion less soil above water table. While boring through cohesion less soil below water table, water in the casing shall always be maintained at or above the water table.

3.1.1.4 The cuttings brought up by the auger shall be carefully examined and soil descriptions duly record. Representative samples shall be preserved for laboratory testing.

3.1.1.5 Wherever in-situ tests are conducted and undisturbed samples are obtained at specified depths from the borehole, care shall be taken to ensure that the borehole is properly cleaned and free from foreign matters at the time of conducting these operations.

3.1.1.6 Water table in the borehole shall be carefully recorded and reported. One of the following methods shall be adopted for measuring the water table:

a. The water table in the borehole shall be allowed to stabilize after depressing the water level adequately by bailing Stability of the borehole sides and bottom shall be ensured at all times.

 Copyright VCS Quality Services Private Limited – All rights reserved

b. The borehole shall be filled with water and then bailed out to various depths. Observations shall be made at each depth to see if the water level is rising or falling. The depth at which neither a fall nor a rise is observed, shall be considered as the water table depth. This shall be established by three successive readings of water levels taken at intervals of 2 hours.

c. Hvorslev's Method

The water level shall be depressed by bailing (to say D below ground level) and shall then be allowed to rise. Water rise at suitable equal intervals of time shall be recorded. The distance of depressed water level from the actual water table shall be obtained by the following formula:

$H0=h^2_1/ (h1-h2)$

Where

H0 - distance of the depressed water level from actual water table, and h_1, and h_2 are two successive rises of water level in the borehole for the same time interval.

The water table depth (Hd) from ground level shall be determined as under: Hd = D-H0

Three sets of observations shall be made and the average value of Hd determined.

Method (a) is suitable for permeable soil while methods (b) and (c) are suitable for both permeable and impermeable soils. The Engineer-in-Charge shall indicate the method to be followed.

3.1.1.7 Immediately on completion of a borehole, bore log shall be prepared in an approved Performa as given in ANNEXURE B to these specifications and submitted to the Engineer-in-Charge in triplicate.

3.1.2 SHELL AND AUGER BORING

3.1.2.1 Augers shall be of helical or post hole type and may be manually operated. The diameter of the hole shall be minimum 100 mm and preferably 150 mm.

3.1.2.2 Specifications set forth in clauses 3.1.1.2 to 3.1.1.7 for Auger Borings shall apply to Shell and Auger borings also.

3.1.2.3 Auger shall be used for soft to firm clay and for silty deposits at upper depths of 10 metres or up to the water table whichever is deeper. For deeper depths in such deposits and for every stiff to hard clays and dense sands located at any depth, use of shell may be made.

3.1.2.4 While boring in soft clays and in sandy deposits below water table, it shall be ensured that, the shell diameter shall be at least 25 to 50 mm less than the casing diameter. This is to ensure that suction is not created in the borehole during withdrawal of the shell with consequent "Caving in and blowing" in the boreholes.

 Copyright VCS Quality Services Private Limited – All rights reserved

3.1.3 ROTARY MUD CIRCULATION DRILLING

3.1.3.1 The drilling shall be carried out manually (as per IS: 1892) or by use of a suitable mechanical rig.

3.1.3.2 Drillings up to water table shall be done by auger and provisions of clauses 3.1.1.1 to 3.1.1.7 shall apply. Below the water table drilling by rotary and circulation shall be adopted.

3.1.3.3 Use of percussion tools may be permitted in very stiff to hard clays and dense sandy deposits.

3.1.4 BACKFILLING OF BOREHOLES

On completion of boreholes, backfilling shall be carried out with approved materials as and when directed by the Engineer-in-Charge. Unless otherwise specified, the excavated soil shall be used for the purpose.

3.1.5 TERMINATION CRITERIA

If very hard strata are met within the borehole at depths shallower than specified in tender documents, the borehole shall be advanced by chiseling. If in the opinion of the Engineer-in-charge, the rate of advancement of borehole is still low, coring may be resorted to subsequently.

3.2 TRIAL PITS

3.2.1 Trial pits shall be of min. 3m x 3 m size at base so as to permit easy access for a visual examination of the walls of the pit and to facilitate sampling and insitu testing operations.

3.2.2 Precautions shall be taken to ensure the stability of pit walls, if necessary even by the provision of shoring. Arrangements shall be made for dewatering, if the pit is extended below water table.

3.2.3 In-situ tests shall be conducted and undisturbed samples obtained immediately on reaching the specified depths, so as to avoid substantial moisture changes in the subsoil.

3.2.4 To ascertain the thickness of the black cotton soil layer existing at the top, trial pits shall be examined visually. Usually it is found that immediately after the black cotton soil, there exists a layer of calcareous (lime) nodules or the white patches which helps to determine the exact thickness of expansive clay layer. Generally, below this layer the possibility of existence of black cotton soil does not exist.

3.2.5 After completion of tests and examination the pits shall be suitably backfilled as directed, by the Engineer-in-charge. Unless otherwise specified the excavated soil shall be used for, this purpose.

3.3 IN-SITU TESTING

Copyright VCS Quality Services Private Limited – All rights reserved

3.3.1 STANDARD PENETRATION TEST

3.3.1.1 The test shall be conducted at specified intervals or at a depth where the strata changes, whichever occurs earlier.

3.3.1.2 The test shall be carried out by driving a standard split spoon by means of 63.5 kg hammer with a 75 cm free fall. Detailed procedure of testing, as specified in IS: 2131, `Method of Standard Penetration Test in Soils' shall be followed. The samples obtained in the split spoon shall be labeled and preserved for identification tests in the laboratory.

3.3.1.3 The standard penetration test shall be discontinued when N is greater than 75 blows for 30 cms of penetration.

3.3.2 VANE SHEAR TESTS

3.3.2.1 These tests shall be conducted in soft to firm clays and sensitive clays. These tests shall also be conducted in case of stiff fissured clays where samples cannot be taken.

3.3.2.2 Tests may also be conducted by direct penetration from ground surface.

3.3.2.3 The apparatus used for vane shear tests shall satisfy the requirements as per IS: 4434.

a. For test from bottom of borehole

i. Vane shall consist of four mutually perpendicular blades as illustrated in Fig. 1. The height of the vane should be twice the overall diameter. It is recommended that the overall diameter of the vane should be 37.5, 50, 65, 75 or 100 mm. The design of the vane shall be such that it causes as little re-moulding and disturbance as possible to the soil when inserted into the ground for a test. The blades shall be as thin as possible, consistent with the strength requirements. The vane should not deform under the maximum torque for which it is designed. The penetrating edge of the vane blades shall be sharpened having an included angle of 90°. The vane blades shall be welded together suitably either directly or to a central rod, the maximum diameter of which should preferably not exceed 12.5 mm. The area ratio of the vane shall be kept as low as possible and shall not exceed 18 percent for the 37.5 mm vane and 12 percent for the 50, 65, 75 and 100 mm diameter vanes. The area ratio may be calculated using the following formula.

$$A, = (8t (D-d) + \pi d2) / \pi d2 \times 100 (\%)$$

Where A = area ratio in percent

t = thickness of vane blades in nun.

D = overall diameter of vane in mm and

d = diameter of central vane rod including any enlargement due to welding in mm.

Note 1: The vane selected should be the largest size suitable for the general soil conditions at a site.

 Copyright VCS Quality Services Private Limited – All rights reserved

The vane rod (the rod to which the vane blades are fixed) may be enclosed in a suitably designed sleeve from just above the blades and throughout the length it penetrates the soil to exclude the soil particles and the effects of soil adhesion. This sleeve shall commence above the blades at a distance equivalent to about two diameters of the vane rod.

Note 2: The vane shall be frequently checked for straightness.

ii. Torque applicator - The torque applicator shall have a clamping device to rigidly secure it to the anchor casing and shall have an attachment to securely hold the string of rods connecting the vane.

The instrument shall be capable of applying a torque to the vane through the string of rods and to measure the same. It should also have a device to read the angular rotation of the upper end of the extension rod. The torque applicator shall be provided with speed control so that the rate of rotation may be maintained at 0.1°/sec. Friction exerted by the torque applicator shall be of negligible magnitude and shall be checked periodically. Depending upon the estimated shear strength of the soil the following table (Table I) may be used as a guide for the selection of torque applicator of capacity 60 N. m (600 kgf. cm)

TABLE - 1
SELECTION OF TORQUE APPLICATOR

Estimated Shear Strength in KN/m^2 (kgf/cm^2)	Vane size (dia) suitable for use with 600 kgf. Cm torque applicator
10 (0.1)	All sizes
20 (0.2)	All sizes except 100 mm size
30 (0.3)	All sizes except 100 mm size
40 (0.4)	All Sizes except 75 mm and 100 mm size
50 (0.5)	All sizes except 75 mm and 100 mm size
60 (0.6)	37.5 mm and 50 mm size.
70 (0.7)	37.5 mm and 50 mm size.

The capacity and accuracy of the instrument shall be one of the following as may be specified by the purchaser:

1. Measure torque upto 60 N.m (600 kgf.cm) to an accuracy of 1 N. m (10 kgf.cm),

or

2. Measure torque upto 200 N.m (2000 kgf. Cm) to an accuracy of 2.5 N.m (25 kgf. cm)

iii. Rod system - The string of torque rods connecting the vane to the torque applicator, called the rod system may be of quick coupling type or of the threaded type. The length of the rods shall preferably be 1 m with a few of smaller lengths. These rods shall have sufficient diameter such that their elastic limit is not exceeded when the vane is stressed to its capacity (see note 3). The threaded rods shall be so coupled that the

Copyright VCS Quality Services Private Limited – All rights reserved

shoulders of the male and female ends shall meet to prevent any possibility of the coupling tightening when the torque is applied during the test. If vane housing is used, the torque rods shall be equipped with well-lubricated bearings where they pass through the housing. These bearings shall be provided with seals to prevent soil from entering them. The torque rods shall be guided so as to prevent soil so as to prevent friction from developing between the torque rods and the walls of casing or boring.

Note 3: If torque versus rotation curve is to be determined, it is essential that the torque rods be calibrated (prior to the use in the field). The amount of rod twist (if any) shall be established in degree per metre per unit torque. This correction becomes progressively more important as the depth of test increases. The calibration shall be made at-least to the maximum depth of testing anticipated.

iv. Dummy Rod- of dimensions equal to that of the vane rod of the vanes used.

v. Guides for Rod - of suitable type provided with ball bearing attachment so as to enable the rod to rotate freely (see Note iv.)

Note 4: During the test, it is essential that the rods and vane are placed centrally in the bore-hole. For this purpose guides shall be used at an interval in depth of not more than 5m.

vi. Drilling equipment - the equipment shall provide a clean hole of the required diameter for insertion of the vane to ensure that the vane test is performed on undisturbed soil.

vii. Jacking Arrangement - for pushing the shoe and vane (where required)

Note 5: The apparatus shall be checked and calibrated as and when required.

b. For tests by Direct Penetration from Ground Surface

i. Vane - as specified in 3.3.2.3 (a. In addition the vane shall be suitably protected by a shoe (see Fig. 2)

ii. Rod System - as specified in 3.3.2.3 (a) and of suitable type.

iii. Extension Pipes - about one metre length with coupling on the outer face to ease the hole.

iv. Torque Applicator - as specified in 3.3.2.3 (a)

Note 6: The apparatus shall be checked and calibrated as and when required.

3.3.2.4 Tests from the bottom of a Bore Hole

a. Sink the bore-hole upto the depth required and extends the casing up to the full depth. If the casing is loose, secure it so that it does not move during the tests. Fix the torque applicator anchor plate to the casing.

b. Connect the vane of suitable size (see Note 1) to the rods and lower it to the bottom of the bore-hole, putting guides at suitable intervals but not more than about 5m as the

 Copyright VCS Quality Services Private Limited – All rights reserved

rods are extended. Push the vane with a moderately steady force up to a depth of 5 times the diameter of the bore hole below the bottom of the bore hole or shoe. Take precautions to make sure that no torque is applied to the torque rods during the thrust. No hammering shall be permitted. Fix the torque applicator with frame to the anchor plate and connect the rods to it. Tighten the torque applicator to the frame properly. A diagrammatic vane test arrangement for test from bottom of bore-hole is shown in Fig. 3

c. Allow a minimum period of 5 minutes after insertion of the vane. Turn the gear handle so that the vane is rotated at the rate of 0.1°/s. Note the maximum torque reading attained. If necessary, note the torque indicator dial gauge readings at half minute interval and continue rotating the vane until the reading drops appreciably from the maximum.

d. Just after the determination of the maximum, torque, rotate the vane rapidly through a minimum of ten revolutions. The re-moulded strength should then be determined (see c. above) within one minute after completion of the revolutions.

e. Remove the vane testing assembly, continue boring and collect soil sample from the level of the vane testing for laboratory analysis to ascertain whether the deposit will behave as a purely cohesive soil.

f. In case where a sleeve is not provided for the vane rod and the soil is in contact with the rod, determine the friction between the soil and the vane rod by conducting tests at appropriate depths using the dummy rod corresponding to that of the vane used in the test. The test should be conducted as with the vane except that the vane is replaced by dummy rod. The test should be conducted in an adjacent bore-hole at the same depth at which the vane tests were conducted. The dummy rod should be pushed in to the ground to the same distance as the vane rod at that depth.

g. Following points shall, however, be carefully supervised in the field;

i. Straightness of vane shall be checked while the entire assembly of vane connected with rod is being lowered to the bottom of bore holes. Vane shall be pushed with a moderate steady force upto a depth of five times the borehole diameter below the bottom of boreholes. Precautions shall be taken to ensure that no torque is applied to the torque rods during the thrust. No hammering shall be done.

ii. An interval of 5 minutes shall be allowed to lapse after insertion of vane.

iii. Torque indicator readings shall be noted at intervals of 30 seconds until the vane readings drop appreciably from the maximum.

iv. Samples shall be collected from the levels at which the tests have been conducted.

3.3.2.5 Tests by Direct Penetration from Ground Surface-Rods shall remain tight when vane is lowered. Guides shall be placed at every 3m to centralize and reduce friction between rods and extension pipe.

3.3.2.6 Records-Records of vane test shall be maintained in the Performa given in ANNEXURE-C

 Copyright VCS Quality Services Private Limited – All rights reserved

3.3.3 DYNAMIC CONE PENETRATION TESTS:

3.3.3.1 Dynamic Cone penetration tests shall be conducted by driving a standard size cone attached loosely or screwed to a string of drill rods. The driving system shall comprise of 65 kg weight having a free fall of 75 cm.

3.3.3.2 The method of conducting the test and details of the equipment shall conform to one of the two alternatives given below. The particular method to be followed is indicated under specific requirements:

a. The test shall be conducted in accordance with IS: 4968 (Part I)-The cone size shall be 50 mm.

b. The test shall be conducted in accordance with IS: 4968 (Part II). A continuous flow of bentonite slurry shall be maintained through the rods and the cone so as to avoid friction between the rods and the soil. The cone size shall be 65 mm and provided with vents for flow of bentonite slurry.

The test shall be reported in a suitable tabular form giving blow counts for every 30cm. Penetration, supplemented by a graphical plot of blow counts versus depth.

3.3.3.3 Dynamic cone penetration tests shall be terminated when blow counts (Nc) exceed 150 for two successive penetrations of 30 crores each.

3.3.4 STATIC CONE PENETRATION TEST.

3.3.4.1 The equipment used for this test shall conform to the requirements of IS: 4968 (Part-III)

3.3.4.2 The capacity of the equipment to be used for test shall not be less than 3.0 tones but preferably 10.0 tones.

3.3.4.3 The test shall not be carried out on gravelly soils and for soils with standard penetration value `N' greater than 50.

3.3.4.4 Test Procedure-Test procedure shall meet the requirements of IS: 4968 (Part III). Some of the important points of the procedure are given below:

a. The cone is pushed through a distance in accordance with the design of the equipment and the need for the sub-strata and the cone resistance noted. The cone and the friction jacket are pushed together subsequently for a distance depending upon, the design of the cone and friction jacket assembly and the combined value of cone and friction resistance noted. This procedure is repeated at predetermined intervals.

b. Equipment shall be securely anchored to the ground at the test point for obtaining the required reaction.

c. The rod of the driving mechanism shall be brought to the top most position. The cone-friction jacket assembly shall be connected to the first sounding rod and the mantle tube. The assembly shall be positioned over the test point through the mantle tube

 Copyright VCS Quality Services Private Limited – All rights reserved

guide and held vertically. The plunger of the driving mechanism shall be brought down so as to rest against the protruding sounding rod.

d. To obtain the cone resistance, this sounding rod only shall be pushed. Switching the gear clutch to the slow position, the drive handle shall be operated at a steady rate of 1 cm per sec approximately, so as to advance the cone only to a depth which is possible with the cone assembly available. During the pushing, the mean value of resistance as indicated by pressure gauges shall be noted ignoring erratic changes.

e. For finding combined cone and friction resistance of the soil the sounding rod, shall be pushed to the extent, the cone has been pushed at the rate of 1 cm per sec noting mean resistance on the gauges.

f. Above procedure shall be repeated after pushing the combined cone-friction jacket and mantle tube assembly to the next depth at which the test is to be performed.

g. The sequence of operation of the equipment is shown in the figure 4.

3.3.4.5 The performa for record of results of static cone penetration test shall be as given in ANNEXURE-D.

3.3.5 PLATE LOAD TEST

3.3.5.1 Plate size and thickness

a. For clayey and silty soils and for loose to medium compact sandy soils (N < 15) normally met with, chequered plate of 60cm x 60 cm shall be used. Alternatively, circular plate of equivalent area also may be used.

b. For dense sandy or gravelly soils (15 < N < 30) the smallest size shall be 30 cm square and largest 75cm square. Circular plates of equivalent area may also be used.

c. The minimum thickness of the chequered plate shall be 25mm.

3.3.5.2 Test pit

a. Test pit shall be atleast five times as wide as the test plate and the depth of the pit shall be the same as the depth of actual foundations.

b. If the test is to be done on strata water table, the water level shall be maintained at the plate level, if necessary, throughout the test by dewatering, especially in sandy soils.

c. The test shall be conducted immediately after examination of soil.

3.3.5.3 Placing of test plate

Plate shall be added to the soil by spreading fine sand in a layer not exceeding 5 mm carefully levelled and set horizontally at the bottom of the pit. The ground shall be protected from rain and a minimum sealing pressure of 70g/cm2 shall be applied and removed before starting the load test.

3.3.5.4 Method of loading

Copyright VCS Quality Services Private Limited – All rights reserved

The reaction method of loading shall be employed. In this method loading is done by a jack against suitable reaction, such as a well as designed truss anchored to the ground at the two ends by soil anchors, loaded platform or any other suitable device. A typical arrangement is shown in Figures 5 and 6.

3.3.5.5 Application of load

a. Loading shall be carried out in increments of 1/5 design load or about 0.3 kg/cm2 whichever is lower.

b. Loading shall be carried out till one of the following conditions occurs:

i. Soil under the plate fails.

ii. Total settlement of the plate exceeds 40 mm.

iii. Load intensity equal to thrice the design load is reached.

iv. Load intensity 6.5 kg/cm2 is reached.

3.3.5.6 Settlement and Observation

a. Settlement shall be recorded with four dial gauges.

b. Settlement shall be observed for each increment of load after an interval of 1, 4, 9, 16, 25, 36 and 64 minutes and thereafter every one hour.

c. The next load increment shall be applied when the rate of settlement is less than 0.05 mm/hour with a minimum period of two hours. For computing the rate of settlement its extrapolation for periods less than one hour shall not be permitted.

3.3.5.7 Unloading

a. Unloading shall be done in stages in the same manner as was done during the application of load. Rebound observations during the unloading also shall be noted.

b. Rebound shall be noted during unloading stages till the readings become reasonably constant.

3.3.5.8 Record

a. Record shall consist of the following:

i. Load-settlement reading in tabular form.

ii. Time-Settlement curve for each load stage.

iii. Load-settlement curve in natural and log-log scale.

iv. Modulus of sub-grade reaction evaluated from test.

b. In addition to above the record shall also contain the following:

Copyright VCS Quality Services Private Limited – All rights reserved

v. Date

vi. List of personnel

vii. Weather conditions

viii. Irregularity in routine procedure, if any.

3.3.5.9 Post test requirements

a. Backfilling of the pit shall be carried out in an approved manner and as per the directions of Engineer-in-Charge on completion of test.

b. An auger bore hole shall be made from the depth of test extending to depth of 6.0m below test depth so as to ascertain the nature of sub-soil test depth. If required, undisturbed samples shall be obtained at suitable depths from bore hole.

3.4 PERCOLATION TEST

Percolation test to determine the soil absorption capacity shall be conducted in accordance with IS: 2470(Part-I) - Appendix A.

3.5 DYNAMIC SOIL TESTS

3.5.1 GENERAL

The following tests shall be conducted for the determination of elastic modulus and shear modulus of the soil and their variation with confining pressure for use in the design of foundation subject to vibratory loads:

3.5.1.1 Wave velocity measurements

3.5.1.2 Resonance tests

3.5.1.3 Cyclic plate load test

3.5.1.4 Repeated triaxial shear test.

3.5.2 WAVE VELOCITY MEASUREMENTS:

The test set up and method of conducting the tests shall conform to IS: 5249 (latest edition). Concrete block shall be cast at a minimum depth of 0.5 m in a virgin soil. Backfilling of the pit shall be carried out in an approved manner and as per the directions of the Engineer-in-Charge after removing the concrete block on completion of the test.

3.5.3 RESONANCE TEST:

The block size and test depth be the same as laid out in 3.4.2 above. The equipment set up and method of conducting the tests set up and method of conducting the tests shall conform to IS: 5249 (latest edition).

 Copyright VCS Quality Services Private Limited – All rights reserved

3.5.4 CYCLIC PLATE LOAD TEST

The test set up and plate size shall conform to that for plate load tests. After stabilization of settlements for each load increment, load shall be removed and elastic rebound & residual settlements recorded. Where necessary, more than one cycle of loading and unloading shall be applied until a steady state of settlements is reached.

3.5.5 REPEATED TRIAXIAL SHEAR TEST:

This test shall be carried ot for confining pressure ranging from 0.5 kg/cm2 to 4.0 kg/cm2. The triaxial sample shall first be subjected to an initial load equal to the anticipated static working load, which shall be indicated at the time of testing. Positive and negative values of a small increment of load shall then be applied to the sample in cycles and a graph plotted of stress against strain. E-value shall be obtained from this plot after obtaining a stable state.

3.5.6 Results of all the above tests shall be incorporated in the form of a plot of shear modulus V/s confining pressure for a range of pressure upto 4.0 kg/cm2.

3.6 FOOTING LOAD TEST

3.6.1 This test shall be conducted on a concrete footing reinforced with 10 bars of 16 mm dia at 20 cm. spacing both ways and having a size of 2m x 2m and a minimum overall thickness of 0.50 m provided with a suitably reinforced pedestal of size 60 cm x 60 cm.

3.6.2 Method of loading, recording of settlement observations and reporting of results shall be as specified for plate load test (clause 3.3.5). Loading shall be carried out in stages of 0.5 kg/cm2 or as specified upto a net loading intensity of 2.5 kg/cm2 (including weight of foundation).

3.7 FIELD CBR TESTS

This test shall be done as per IS: 2720 part XXXI at specified depth after removing top soil, vegetation and organic matter.

3.8 SAMPLING

3.8.1 SAMPLING RECORD

All samples (disturbed and undisturbed) collected from the pit/bore hole shall be labeled in a manner shown in the ANNEXURE E. Label shall be attached to the top of sampler, in case of undisturbed samples. In case of samples collected in jar or other containers, the label should be properly pasted to the Jar/container.

3.8.2 UNDISTURBED SOIL SAMPLES FROM BOREHOLES

3.8.2.1 Samples for recovering undisturbed samples from cohesive soils at the specified depth shall conform to IS: 2132. However, use of samplers less than 70mm diameter shall not be permitted.

 Copyright VCS Quality Services Private Limited – All rights reserved

3.8.2.2 The sampling procedure shall conform to IS: 2132. Both the area ratio of the cutting edge, as we all recovery ratio of the cutting edge, as well as recovery ratio of the sample shall be measured and reported. For normal soils, area ratio of the sampling tubes, shall conform IS: 2132, that is, it may vary from 10.9 percent to 12.4 percent but for sampling in very hard and dense soils, use of thick walled sampling tubes with area ratio not exceeding 20% may be permitted subject to the approval of the Engineer-in-charge.

3.8.2.3 In order to reduce the wall friction, suitable precautions such as oiling inside and outside the sampling tubes shall be observed. The sampling tube shall have smooth finish.

3.8.2.4 In soft to firm clays, undisturbed samples shall b e collected by pushing the tube continuously without impact or twisting. Driving of sampling tubes shall be permitted only if stiff to very stiff and hard deposits exists.

3.8.2.5 For highly sensitive soils, piston samples shall be employed.

3.8.2.6 For soft clays exceeding more than 15m depth from the ground level, collection of undisturbed samples shall be supplemented by the in-situ Vane Shear test.

3.8.2.7 The top and bottom of the sample shall be clearly marked on the sampling tube.

3.8.2.8 Undisturbed samples shall be tested within a period of two weeks of taking them from the bore holes or Trial pit.

3.8.2.9 If any space is left between the end of the tube and top of wax, the same shall be tightly packed with raw dust or any other suitable material. A close fitting bid or screwed cap shall then be placed on each end of the tube and held in position by adhesive tape.

3.8.3 UNDISTURBED SOIL SAMPLES FROM TRIAL PITS

3.8.3.1 Samples shall be obtained at specified depths from trial pits in a timber or steel box as under:

A benching shall be made at the level where it is proposed to take the sample. A cube of 30cm size shall be formed by careful trimming with knife or any other suitable sharp instrument. A timber box having dimensions slightly larger than the soil cube shall be slipped on it so as to act as. a container and the sample removed from the pit without causing and disturbance.

3.8.3.2 After recovery of the sample, all exposed faces shall be sealed with wax to prevent moisture loss and the sample shall be properly labeled and transferred to the laboratory immediately.

3.8.4 Disturbed Soil Samples - Disturbed soil samples shall be collected at every half a metre and at every change of strata from boreholes as well as from trail pits. Identification labels indicating depth, borehole number and visual soil classification shall be affixed on the containers.

 Copyright VCS Quality Services Private Limited – All rights reserved

3.8.5 WATER SAMPLES

3.8.5.1 Samples of ground water shall be obtained from the specified boreholes at the depths specified by Engineer-in-Charge.

3.8.5.2 At the specified depth water shall be bailed or pumped out so that fresh ground water flows into the borehole. Care shall be taken in avoiding any contamination with surface water at any time. Water sample shall be collected in a five litre polythene or glass container and labeled properly.

3.9 PIEZOMETERS

3.9.1 These may be installed in minimum 100 mm dia bore holes drilled by any suitable method.

3.9.2 INSTALLATION OF PIEZOMETERS:

Piezometers of Casagrande open stand pipe type shall be supplied and installed at locations and depth as indicated in the specific requirements. The piezometers shall be properly tested before installation to the entire satisfaction of Engineer-in-Charge. The details of the piezometer tips, size and diameter of stand pipe, RLs of tops of the standpipe and the tip of the piezometer and procedure of installation etc. shall be furnished in the report along with a sketch.

If the piezometers fail to show results or malfunction the contractor shall replace them at a specified location without any extra charge to the owner.

The contractor shall provide each piezometer with permanent enclosure/chamber made of steel or concrete or brick of plan area 50cm x 50 cm and height suitable for the projection of the piezometer with a lock and key system to protect the open end of the stand pipe. The arrangement shall also ensure that readings can be taken at regular intervals. The contractor shall arrange a qualified person to take readings of all these piezometers at regular as directed by the Engineer-in-Charge till all other works covered in the scope of this tender completed.

The item rate shall be inclusive of all those mentioned above and no extra cost is permissible on any account.

3.10 PRESSURE METER

3.10.1 PRESSURE METER TESTS/SUBSOIL DEFORMETER TESTS

The tenderer shall furnish, along with the bids, the details of the equipment and the procedure of testing.

The results of each test, necessary graphs and plots, and interpretation of results shall be included in the report.

The depth of each test shall be indicated at the time of conducting the tests.

Copyright VCS Quality Services Private Limited – All rights reserved

The pressure meter should have the following minimum limiting pressure ranges for different types of soils.

Silt	0-7 kg/cm2
Clay	0-12
Stiff Clay	18-40
Dense Silt	12-30
Loose Sand	4-8
Soft or weathered rock	10-30
Sand & Gravel	10-20
Dense Sand & Gravel	30-60

4.0 LABORATORY TESTING OF SOILS

4.1 SAMPLINGS RECORD

Details of sampling shall be entered in the performa given in ANNEXURE - F. The performa shall be submitted in triplicate to Engineer-in-Charge. One of the copies shall be returned by Engineer-in-Charge indicating the tests to be performed.

4.2 STORING OF SOIL SAMPLES IN LABORATORY

4.2.1 Soil samples shall be inspected and tested shortly after their arrival at the laboratory. Proper arrangement for storing shall be made in cases where testing of samples is not immediately after they are brought to the laboratory.

4.2.2 Bags of canvas, cans and bins can be used for storing large quantities of soil. The containers should have a label or tag which gives such data as soil type, project location, sampling data, boring number, sample depth, etc.

4.2.3 If the undisturbed clay samples are taken from pit, they should be covered with a protective coating. The coating shall preferably be with wax having melting point between 120° to 16 0°F. The wax coating can be applied by either dipping the soil sample in the melted wax or using a soft brush to spread the melted wax. Wax should not be heated to more than a few degrees above its melting temperature, since to heating to higher temperatures, tend to drive off more volatile hydrocarbons, thus making the wax more permeable and more brittle upon coating.

4.2.4 If the soil sample is to be stored for more than 15 days, a protective coating of wax, in more than one layer, is recommended with a total thickness of 12 mm to 18 mm.

4.2.5 A few selected soil samples shall be stored in the laboratory till the soil investigation report is finalized and approved by the Engineer-in-Charge.

4.3 HANDLING OF UNDISTURBED SAMPLES IN LABORATORY

 Copyright VCS Quality Services Private Limited – All rights reserved

4.3.1 The undisturbed samples shall be handled in the laboratory with due precaution to avoid disturbances and loss of moisture content which may adversely affect the test results.

4.3.2 Unprotected samples shall never be handled with bare hands because the hands foster disturbance and loss of moisture. The sample shall be protected by using Aluminium cellophane or wax paper before handling it.

4.3.3 When transporting a specimen it should be supported over its entire length by using a mould, plate or paper sling.

4.3.4 A chunk from an undisturbed sample collected from pit shall be cut with a wire saw which consists of a frame with a piano wire stung tightly across its. Any wax or other covering used to protect the sample shall be cut with a knife or hack saw. Care shall be taken when trimming the finished specimen. The wire in the wire sw used for final trimming shall be smaller in diameter than that used for preliminary cutting and the wire shall be cleaned prior to each out.

4.3.5 In case of samples taken in sample tubes, the samples shall be extrued from their tubes by a steady pushing process and not by a jerky or driving one. Prior to extrusion the plug, which protects the end of the soil shall be removed by scrapping it with a knife or sawing off that portion of the tube which contains plug. The extrusion shall employ the same direction of motion or motion of the soil with respect to the tube as existed during sampling, because a reversal of stress tends to cause disturbance.

4.4 PROCEDURES OF TESTING

All apparatus used for laboratory testing shall conform to the specifications laid down in the relevant Indian Standards.

4.4.1 All testing procedures shall conform to those laid down in relevant Indian Standards.

4.4.2 For proper interpretation, results of each laboratory test shall be presented either as given in relevant Indian Standard or as specified in specific requirements.

5.0 REPORT

5.1 The report shall state in brief the description of the test procedures employed.

5.2 The report shall also include wherever required a sample calculation with reference to formula used to evaluate the various parameters.

5.3 Report shall also contain the summary of various soil parameters evaluated, in a performa as shown in ANNEXURE-G.

5.4 Character and genesis of soil.

5.5 Procedure of investigation employed.

Copyright VCS Quality Services Private Limited – All rights reserved

5.6 Detailed borelogs, subsoil sections, laboratory and field test results both in tabular as well as in graphical form and a plot plan showing locations and reduced levels of bore holes and other tests.

5.7 Results obtained and their interpretation.

5.8 Recommendation for type, depth, ultimate and safe bearing pressure and settlement of foundation for the following structures.

a. Process units, power plants etc. which carry a heavy unit load.

b. Non-plant structures such as administrative buildings etc, which are lightly loaded.

c. Storage tanks and other structures founded at or near ground surface.

5.9 Recommendations shall also be given for allowable bearing pressure and settlements for foundations of sizes ranging from 1 to 10 metres placed at different depths ranging from surface to 3 metres below the ground surface.

5.10 Aggressiveness of soil and soil water to reinforced concrete and steel and other building materials.

5.11 Suitability of soil and degree of compaction of fill for the pavement and tank farms & recommendation for thickness of pavement for class AA and Class A loadings.

5.12 Modulus of subgrade reaction for pressure ranging upto 3kg/cm2. The recommended values shall include the effect of size, shape and depth of foundation.

5.13 In case of poor soil conditions recommendations are to be made for the following.

a. Ground treatment method if considered necessary. If so type (s) of treatment method (s) recommended, depth of treatment and settlements and bearing capacity estimates after treatment.

b. Pile foundations if considered necessary, If so, types (s) of pile recommended, depth of pile, safe load capacity for different sizes of piles, p-y curves for lateral pile analysis shall also be submitted if specifically asked. Contractor shall also provide the ultimate pile load capacity curve with depth for various sizes of piles.

c. All recommendations shall be supported by back up calculations.

5.14 Any other information of special significance encountered during investigation and likely to have a bearing on design and construction.

5.15 Interim reports based on the data available shall be supplied to the Engineer-in-Charge on demand.

Copyright VCS Quality Services Private Limited – All rights reserved

6.0 ANNEXURE – A

LIST OF INDIAN STANDARDS REFERRED

IS: 1498	Classification and Identification of Soils for General Engineering Purposes.
IS: 1888	Method of Load Tests on Soils
IS: 1892	Code of practice for Site Investigations for Foundations.
IS:2131	Method for Standard Penetration Test for Soils
IS: 2132	Code of Practice for Thin Walled Tube Sampling of Soils.
IS: 2470-Part-I	Code of Practice for Design and Construction of Septic Tanks-Small installations.
IS:2720	Method of Test for Soils (Relevant Parts)
IS: 4434	Code of practice for in Situ Vane Shear Test for Soils.
IS: 4968-Part-I	Method for subsurface sounding for soils Dynamic Method Using Cone without Bentonite Slurry.
IS: 4968-Part-II	Method for subsurface sounding for soils Dynamic Method Using Cone and Bentonite Slurry.
IS: 4968-Part-III	Method for subsurface sounding for soils static cone penetration test.

Copyright VCS Quality Services Private Limited – All rights reserved

IS: 5249	Method of Tests for Determination of Insitu Dynamic Properties of Soils.

Copyright VCS Quality Services Private Limited – All rights reserved

7.0 ANNEXURE - B

RECORD OF BORING

Client……..
Ground Surface Level……
Type of Boring……
Diameter of Boring……..
Ground Water Level……..

Location……
Boring No……..
Date Started……..
Date Completed…….
Site Engineer……..

Describe of strata	Soil Classification	Strata Thickness	Depth from G.L	R.L. of Layer	Samples			Insitu Test			Remarks
					Type	No.	Depth	Type	Depth	Value	

Copyright VCS Quality Services Private Limited – All rights reserved

8.0 ANNEXURE-C

PROFORMA FOR FIELD VANE SHEAR TEST

GENERAL

Project

Bore-hole No.

Date of test

DETAILS OF BORING (IF ANY)

Location

Reference elevation

or

Ground elevation

Method of making the hole

Cased/Uncased

Level of ground water table

at the time of test

DETAILS OF VANE TEST

(a) Test from bottom of Bore hole

Vane size

Dia. of dummy rod (if used)

Conversion factor for torque measuring equipment

(b) Test by Direct Penetration from Ground Surface

Vane Constant

Depth

Copyright VCS Quality Services Private Limited – All rights reserved

TIME-ROTATION READINGS

Time in Minutes	Depth					
	D	U	R	D	U	R

	D	U	R	D	U	R
Depth of vane tip below bottom of bore hole or vane shoe						
Time of failure						
Maximum reading in torque measuring equipment						
Maximum torque						
Number of revolutions for remoulding						
Shear strength of undisturbed soil KN/m^2 (kgf/cm^2)						
Shear strength of remoulded soil KN/m^2 (kgf/cm^2)						
Sensitivity						

D = Test with dummy, if used, or any other test for determination of friction of vane rod/torque rod.
U = Test with vane in undisturbed soil.
R = Test with vane in remoulded soil.

Copyright VCS Quality Services Private Limited – All rights reserved

9.0 ANNEXURE -D

PROFORMA FOR STATIC CONE TEST

Project : Test point location

Site : Ground elevation

Borehole Reference : Ground water level

Static Cone Resistance

Correction:

1. Mass of cone = m
2. Mass of each sounding rod = m_1
3. Cone area at base, b =cm^2
4. *Plunger area
5. Correction factor (to be added to the gauge reading)

   = $(m + nm_1) \times 10\ KN/m^2$

   = $(m + nm_1)/l0\ Kgf/cm^2$

* The gauge reading shall be multiplied by the ratio of plunger area to the area of the base of

cone

Depth below Ground level	Gauge reading	Corrected value of cone penetration Resistance
	(KN/m^2)	(KN/m^2)

Frictional resistance measured at particular depths with the help of friction jacket attached to the static cone.

 Copyright VCS Quality Services Private Limited – All rights reserved

Correction:

1) Mass of friction jacket = m_f kg

2) Area of surface of friction jacket, a = πdh cm^2

Where d= outer diameter of friction jacket and

h= length of friction jacket

3) Cone area at base, b = cm^2

4) Correction factor (to be added) = 100 m_f /a KN/m^2

= 1 KN/m^2 (.01 kgf/cm^2)

Depth below ground level (m)	Total resist-ance KN/m^2 (kgf/cm^2)	Cone resis-tance (uncorrected) KN/m^2 (kgf/cm^2)	Total resist-ance-cone resistance KN/m^2 (kgf/cm^2)	Frictional resistance in KN/m^2 (kgf/cm^2)	Corrected frictional resistance KN/m^2 (kgf/cm^2)
m	X	y	x- y	((x-y)b)/a=Z	Z+(100/a)m_f (Z+ m_f/a)

10.0 ANNEXURE-E

SAMPLE LABEL

Project_____
Location_____
Date_____
Sample No. _____
Soil Description_____
Boring/Trial
No._____
Depth of sample top_____
Elevation of ground surface_____
Type of sample_____
Disturbed/Undisturbed_____

 Copyright VCS Quality Services Private Limited – All rights reserved

Remarks_____

_____

_____

Copyright VCS Quality Services Private Limited – All rights reserved

11.0 ANNEXURE - F

SAMPLE DATA FOR RECORD

DATE_____

ELEVATION OF GROUND SURFACE_____

SIZE OF SAMPLE STORED AFTER TEST_____

IF COMPLETE_____

PROJECT_____

LOCATION_____

BOREHOLE/PIT NO.	SAMPLE No.	DEPTH IN METERS		TYPE OF SAMPLE		ORIGNAL SIZE OF SAMPLE	BRIEF DESCRIPTION OF SOIL STRATA	TEST TO BE PERFORMED																	REMARKS
											MECHANICAL ANALYSIS			SHEAR TEST					COMPACTION						
															TRIAXIAL										
		TOP	BOTTOM	DISTURBED	UN DISTURBED			WATER CONTENT	DENSITY (DRY AND WET)	ATTERBERG LIMITS	SIEVE	COMPLETE	UNCONFINED COMPRESSION TEST	BOX SHEAR	UNDRAINED	CONSOLIDATED UNDRAINED	DRAINED	CONSOLIDATION	PROCTOR	MODIFIED PROCTOR	C.B.R	PERMEABILITY	RELATIVE DENSITY	CHEMICAL ANALYSIS	

Copyright VCS Projects – All rights reserved

12.0 ANNEXURE G

LABORATORY TEST RESULTS

BOREHOLE/PIT NO.	SAMPLE No.	DEPTH IN METERS	BRIEF DESCRIPTION	WATER CONTENT	DENSITY		LIMITS			MECHANICAL ANALYSIS				SHEAR TEST				CONSOLIDATI-ON TEST			REMARKS
					DRY	WET	LIQUID	PLASTIC	PLASTICITY IND.	GRAVEL	SAND	SILT	CLAY	COMFINING OR NORMAL PRESSURE	DEVIATOR	C	Ø	PRESSURE RANGE	C_v	M_v	
				%	gm/cc	gm/cc				%	%	%	%	Kg/cm²	Kg/cm²	Kg/cm²	Deg.	Kg/cm²	cm²/s	cm²/kg	

Copyright VCS Projects – All rights reserved

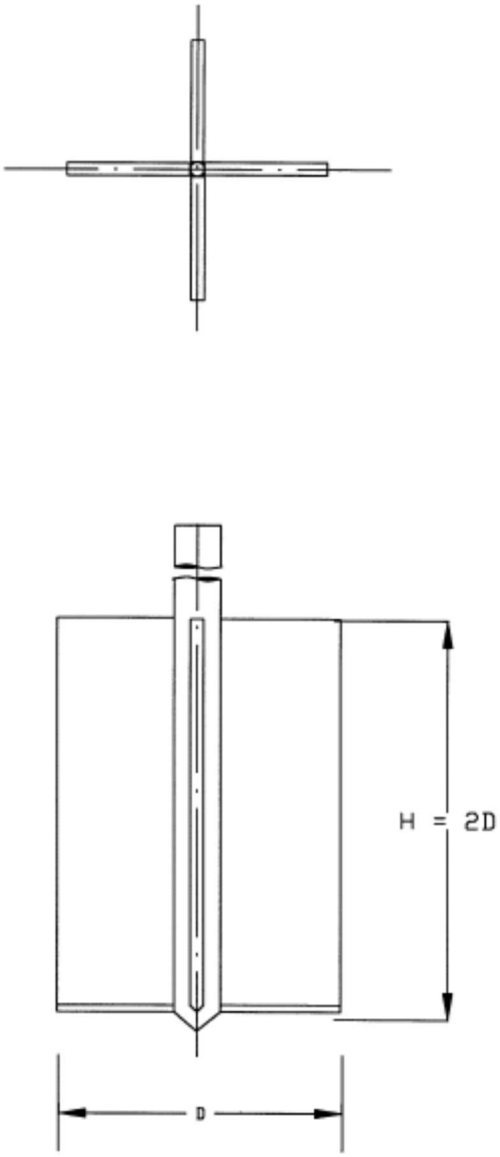

FIG. 1 GEOMETRY OF THE FIELD VANE

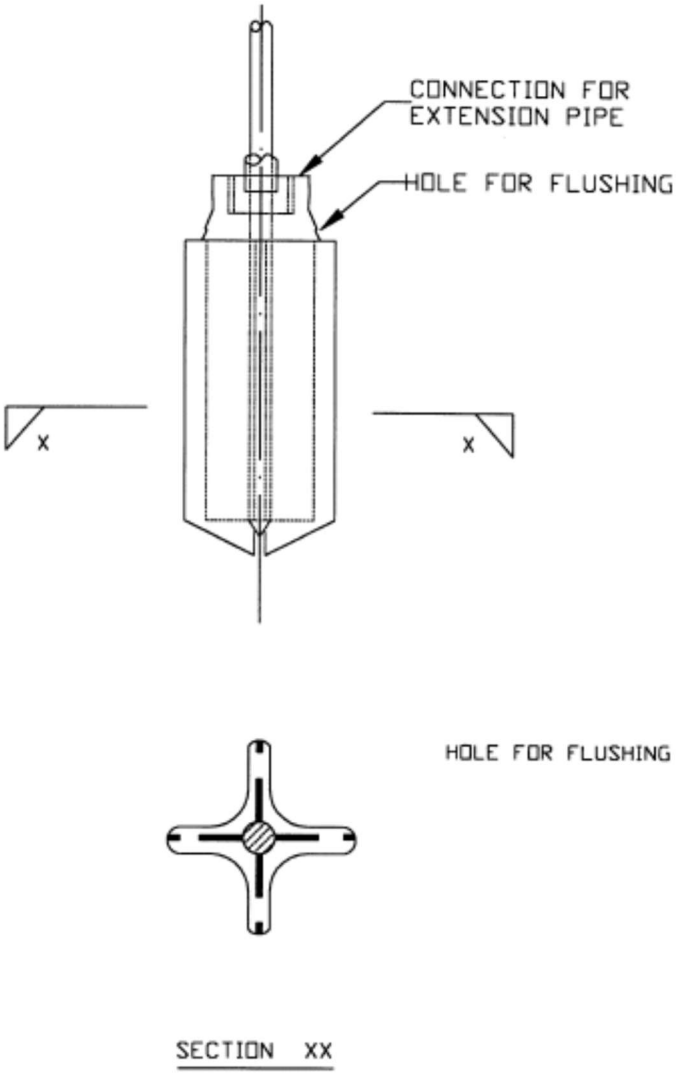

FIG. 2 TYPICAL VANE PROTECTING SHOE

Copyright VCS Projects – All rights reserved

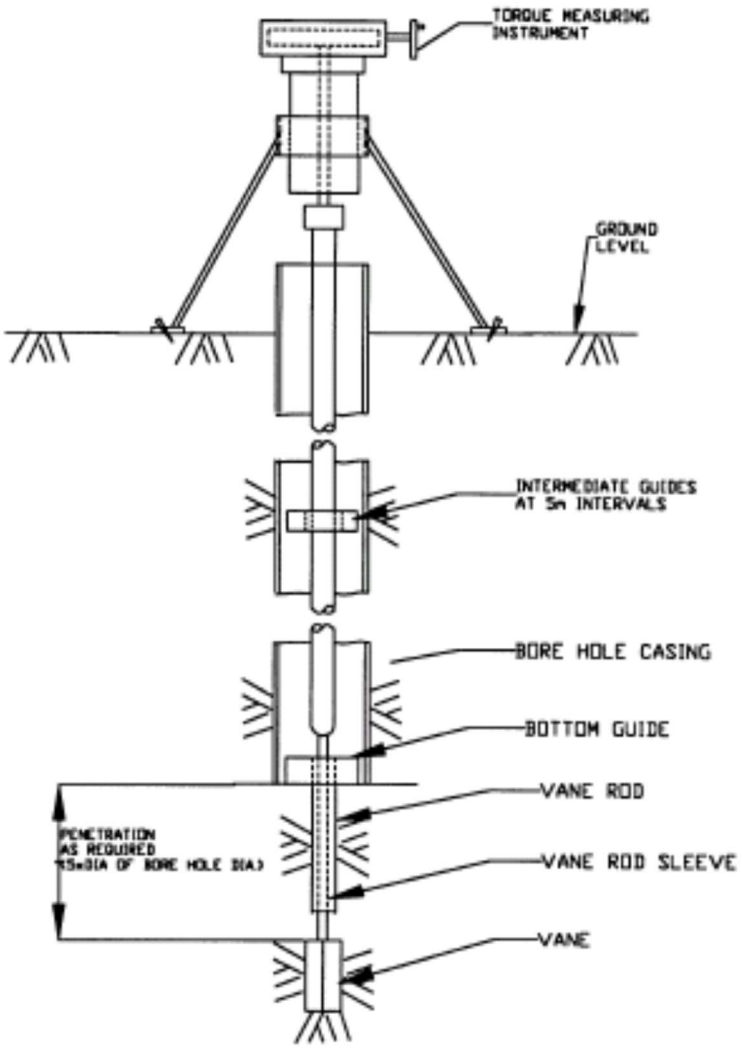

FIG. 3 DIAGRAMMATIC VANE TEST ARRANGEMENT
(FOR TEST FROM BOTTOM OF BORE HOLE)

Copyright VCS Projects – All rights reserved

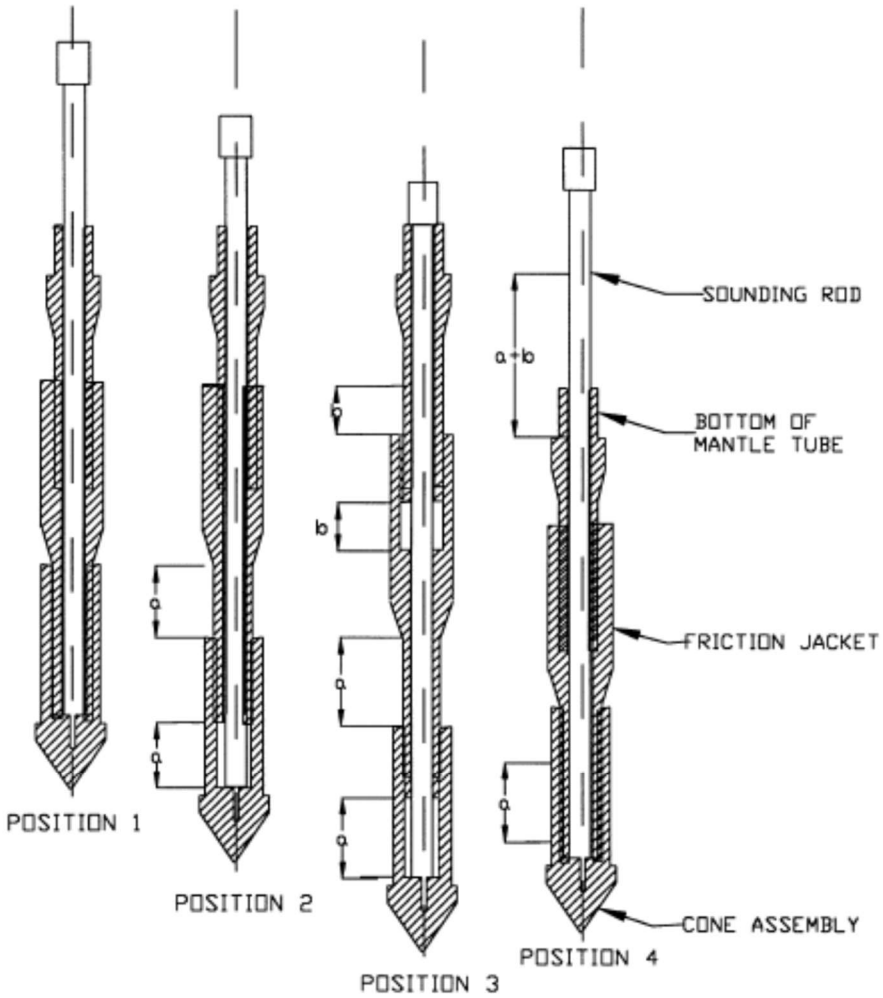

a = 35 mm MIN.

b = 35 mm MIN.

FIG. 4 FOUR POSITIONS OF THE SOUNDING APPARATUS WITH FRICTION JACKET

Copyright VCS Projects – All rights reserved

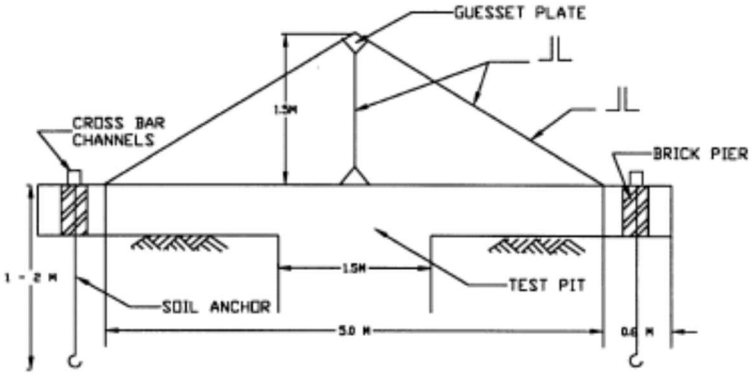

FRONT VIEW

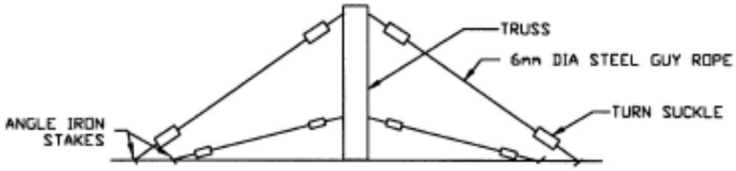

SIDE VIEW

FIG.5: LOADING TRUSS AND SOIL ANCHORS

Copyright VCS Projects – All rights reserved

Energising Quality

VCS Quality Services Pvt Ltd

STANDARD SPECIFICATION

FOR

CONSTRUCTION AND INSTALLATION OF RCC BORED CAST-IN-SITU PILES

VPC-SS-CS-6033

Rev. No	Date	Prepared By	Checked By	Approved By	Authorized By
03	31.01.2022	NV	GDS	HK	GW
02	28.02.2020	NV	GDS	RKB	SK
01	16.10.2019	MA	MO	AD	SK
00	05.07.2017	MA	MO	AD	SK

UNCONTROLLED COPY	:	**If printed**
CONTROLLED COPY	:	**If in soft and signed**

Copyright VCS Quality Services Private Limited – All rights reserved

REVISION RECORD						
Rev.	**Revision Date**	**Prepared by**	**Checked by**	**Approved by**	**Authorized by**	**Revision Description**
00	05.07.2017	MA	MO	RKB	AD	Issued for use as Standard
01	16.10.2019	MA	MO	RKB	SK	
02	28.02.2020	NV	GDS	RKB	SK	New revision system updated
03	31.01.2022	NV	GDS	HK	GW	VCS QMS Integration

Copyright VCS Quality Services Private Limited – All rights reserved

ABBREVIATION

m	Metre
mm	Millimetre
cm	Centimetre
IS	Indian Standard
BIS	Bureau of Indian Standard
Kg/m^3	Kilogram Per Cubic Metre
RQD	Rock Quality Designation

Copyright VCS Quality Services Private Limited – All rights reserved

CONTENTS

1.0 SCOPE 5
2.0 REFERENCE 5
3.0 MATERIALS.....5
4.0 DESIGN CONSIDERATIONS 6
5.0 EQUIPMENT AND ACCESSORIES 6
6.0 PILING INSTALLATION 7
7.0 DEFECTIVE PILES 8
8.0 RECORDING OF DATA 8

 Copyright VCS Quality Services Private Limited – All rights reserved

1.0 SCOPE

1.1 This standard specification covers the construction and installation of driven cast-in-situ load bearing concrete piles.

1.2 For specific work requirements concerning construction or otherwise modifying or supplementing the provisions of this specification, reference may be made to 'Specific Requirements'. In the case of any conflict between requirements set forth in Specific Requirements and provisions of this specification, the 'Specific Requirements' shall govern.

2.0 REFERENCE

2.1 IS: 2911 (Part I /Sec.2) - Indian Standard Code of Practice for Design and Construction of pile foundations for Bored Cast-in-Situ Piles, shall he referred to in conjunction with these specifications during the entire design, construction and installation work.

2.2 Reference to any code shall always mean reference to the latest revised edition of the code including all its amendments upto date, unless otherwise specified. In the event of any conflict between the requirements of this specification and those of the referred codes, the former shall govern.

3.0 MATERIALS

3.1 All materials, viz. cement, steel, aggregate, water etc. which are to be used in the construction work, and shall conform to Standard Specification for Plain and Reinforced Cement Concrete No. VPC-SS-CS-6023.

3.2 CONCRETE

3.2.1 Methods of the manufacture of cement concrete shall in general, be in accordance with IS: 2911 (Part I/Sec.2) and as per following clauses.

3.2.2 The grade of concrete shall be M-25 (Minimum) with a minimum cement content of 400 kg/m3.

3.2.3 SLUMP OF CONCRETE

Slump of concrete shall range between 100 to 180 mm depending on the manner of concreting. The table below gives the general guidance:

PILING	SLUMP (IN MM)		TYPICAL CONDITIONS OF USE
	MIN.	MAX.	
A	100	180	Poured into water-free unlined bore having widely spaced reinforcement. Where reinforcement is not spaced widely enough, cut-off level of pile is within the casing and diameter of pile is less than or equal to 600mm, higher order of slump within this

Copyright VCS Quality Services Private Limited – All rights reserved

			range may be used.
B	150	180	Where concrete is to he placed under water or drilling mud, by tremie or by placer.

4.0 DESIGN CONSIDERATIONS

4.1 STRUCTURAL DESIGN

The piles shall have necessary structural strength to transmit the loads imposed on it, to soil. Relevant parts of IS: 2911 (Part I /Sec.2) and specific requirements shall be considered to apply for assessing the structural capacity of piles.

4.2 REINFORCEMENT

4.2.1 The minimum longitudinal reinforcement shall be 0.4% of the cross sectional area of the pile.

4.2.2 Clear cover to the main reinforcement shall be 50mm. This shall he increased to 75mm in case of aggressive soils and ground water conditions.

4.2.3 The vertical reinforcement shall project 50 times its diameter above the cut-off level.

4.2.4 The minimum clear distance between the two adjacent main reinforcement bars should normally be 100mm for the full depth of cage. The bars shall be so placed as not to impede the placing of concrete.

4.2.5 The lateral ties in the reinforcing cage shall be preferably spaced not closer than 150 mm centre to centre.

4.2.6 The minimum diameter of the lateral ties shall be 8mm.

5.0 EQUIPMENT AND ACCESSORIES

5.1 The equipment and accessories for installation of bored cast-in-situ piles shall be selected giving due consideration to the subsoil conditions and the method of installation etc. These shall be of standard type and shall have the approval of the Engineer-in-Charge.

5.2 The capacity of the rig shall be adequate so as to reach the desired depth.

5.3 Provision shall be kept for chiselling within the borehole in case of any underground obstruction/hard strata. However, chiselling shall he carried out only with the approval of Engineer-in-Charge.

5.4 In case pile is required to be socketted in medium or good quality rock strata, the equipment mobilized shall have adequate capability to do so upto the required socket length. For the purpose of classification of rock for the determination of length of socketting, pilot drill holes shall be carried out in the areas to be piled.

 Copyright VCS Quality Services Private Limited – All rights reserved

5.5 Pilot drill holes shall be of Nx or Bx size as per specific requirements. Rock drilling shall he carried out using double tube core barrel. Drilling and storing of rock cores shall conform to relevant IS codes. Rock quality shall be classified as under depending upon the RQD.

RQD (%)	ROCK QUALITY
<25	Poor
25 to 75	Medium
>75	Good

6.0 PILING INSTALLATION

6.1 CONTROL OF ALIGNMENT

6.1.1 The piles shall be installed as accurately as possible as per the designs and drawings. The permissible positional deviations shall be governed by IS: 2911 (Part I/ Sec.2). In case of piles deviating beyond such permissible limits, the piles shall be replaced or supplemented by additional piles, as directed by Engineer-in-Charge.

6.2 BORING

6.2.1 The boring shall be done by one of the following methods

a. Direct mud circulation

b. Reverse mud circulation

c. Bailer bentonite.

The actual method of construction to be followed shall be as per specific requirements.

6.2.2 In very soft soil a permanent liner shall be installed to ensure stability of borehole. A liner shall be used to protect the green concrete where a high hydrostatic pressure exists in the subsoil or where an underground flow of water exists and which is likely to damage the concrete on withdrawal of casing.

6.2.3 Use of temporary liner only in lieu of bentonite to stabilise sides of boreholes shall not be permitted.

6.2.4 Properties of bentonite used and quality control shall be as per IS: 2911 (Part me /Sec. 2).

6.3 CONCRETING OF PILES

6.3.1 REINFORCEMENT

a. The reinforcements shall be made into cages sufficiently rigid to withstand handling without damage. In case the reinforcement cage is made up of more than one segment, the same shall be assembled by providing necessary laps preferably by welding.

 Copyright VCS Quality Services Private Limited – All rights reserved

b. The hoops and links shall be fit tightly against longitudinal bars and be bound to them by welding tack weld) or tying with mild steel.

c. Care shall be taken to ensure that the reinforcement bars do not come closer while the cage is lowered down the hole.

d. Proper cover and central placement of the reinforcement shall be ensured by use of Suitable concrete spacers or rollers, cast specifically for the purpose.

6.3.2 CONCRETING

a. Concreting shall not be commenced until the Engineer-in-Charge satisfies himself that at final borehole depth the soil is not weaker than that taken as the basis for pile design. If necessary, SPT or similar test shall be conducted to ensure the above.

b. Borehole bottom shall be thoroughly cleaned to make it free from sludge or any foreign matter before lowering the reinforcement cage. The full length of reinforcement cage shall be in position before start of concreting.

c. Concreting shall be done by tremie method. The operation of tremie concreting shall be governed by IS: 2911 (Part I/ Sec.2).

d. The concrete placing shall not proceed if specific gravity of fluid near about the bottom of borehole exceeds 1.2. Determination of the specific gravity of the drilling mud from the base of the borehole shall be carried out by taking samples of fluid by Suitable slurry sampler approved by the Engineer-in-Charge, in first few piles and at a Suitable interval of piles thereafter and the results recorded. Control of consistency of drilling mud shall he carried out throughout boring as well as concreting operations.

e. Care shall be exercised to preserve correct cover and alignment of reinforcements and avoid any damage to it throughout the complete operation of placing the concrete.

f. The top of the pile shall be brought up above the cut off level minimum by 0.75 m so as to permit removal of all laitance and weak concrete before capping and to ensure good and sound concrete at the cut-off level for proper embedment into the pile cap. Any defective concrete in the head of the completed piles shall be cut-away and made good with new concrete.

7.0 DEFECTIVE PILES

7.1 Defective piles shall be removed or left in place, as judged convenient by the Engineer-in-Charge, without affecting the performance of adjacent piles or capping above and additional piles shall be provided to replace them.

8.0 RECORDING OF DATA

8.1 A competent supervisor shall be present to record the necessary information during the installation of piles. The data to be recorded shall include:

a. The dimensions of the piles, including the reinforcement detail and the mark of the pile.

 Copyright VCS Quality Services Private Limited – All rights reserved

b. The boring method employed.

c. The type of soil in which pile is terminated.

d. The depth bored.

e. The depth of water table.

f. When drilling mud is used, the specific gravity of the fresh supply and contaminated mud in the borehole before concreting is taken up, in case of first few piles and subsequently at Suitable interval of piles.

g. The time taken for concreting.

h. The cut-off level/working level, and

i. The consumption of cement.

j. Any other important observations.

8.2 Typical data sheets of recording piling data shall be as given in Appendix - D of IS: 2911 (Part I /Sec.2).

8.3 Any deviation from the designed location, alignment or load carrying capacity of any pile shall be noted and promptly reported to the Engineer-in-Charge.

Copyright VCS Quality Services Private Limited – All rights reserved

Energising Quality

VCS Quality Services Pvt Ltd

STANDARD SPECIFICATION
FOR
TESTING OF CONCRETE PILES

VCS-SS-CS-6034

Rev. No	Date	Prepared By	Checked By	Approved By	Authorized By
03	31.01.2022	NV	GDS	HK	GW
02	28.02.2020	NV	GDS	RKB	SK
01	16.10.2019	MA	MO	AD	SK
00	05.07.2017	MA	MO	AD	SK

UNCONTROLLED COPY	:	**If printed**
CONTROLLED COPY	:	**If in soft and signed**

Copyright VCS Quality Services Private Limited – All rights reserved

REVISION RECORD						
Rev.	**Revision Date**	**Prepared by**	**Checked by**	**Approved by**	**Authorized by**	**Revision Description**
00	05.07.2017	MA	MO	RKB	AD	Issued for use as Standard
01	16.10.2019	MA	MO	RKB	SK	
02	28.02.2020	NV	GDS	RKB	SK	New revision system updated
03	31.01.2022	NV	GDS	HK	GW	VCS QMS Integration

Copyright VCS Quality Services Private Limited – All rights reserved

ABBREVIATION

m	Metre
mm	Millimetre
cm	Centimetre
IS	Indian Standard
BIS	Bureau of Indian Standard
Kg	Kilogram

Copyright VCS Quality Services Private Limited – All rights reserved

CONTENTS

1.0 SCOPE 5
2.0 REFERENCE 5
3.0 REQUIREMENTS 5
4.0 VERTICAL LOADING TESTS 6
5.0 LATERAL LOADING TEST 8
6.0 PULL OUT CAPACITY OF PILES 9
7.0 COMBINED VERTICAL AND LATERAL LOADING 10
8.0 SPECIAL TYPE OF LOADING 11

Copyright VCS Quality Services Private Limited – All rights reserved

1.0 SCOPE

1.1 This specification covers the requirements and methods of testing of a single pile for evaluating its safe capacity in

a. Vertical loading (Compression)

b. Lateral Loading

c. Pull Out

d. Combined Vertical and Lateral Loading

e. Special type of loading such as vibratory loadings

1.2 These specifications shall be applicable for all types of piles in general excepting sheet piles.

1.3 For specific work requirements or otherwise modifying or supplementing the provisions of this specification, refer to specific requirements. In case of conflict between requirements set forth in the specific requirements and the provisions of this specification, the specific requirements shall govern.

2.0 REFERENCE

2.1 Reference to Indian Standard Codes shall always mean reference to the latest issue of the relevant standards, including all the amendments upto date.

2.2 CODES

All testing shall be performed in accordance with the following codes and the provisions of these specifications

IS: 2911-(Part IV) - Code of Practice for Design and Construction of pile Foundations - Load Test on Piles.

3.0 REQUIREMENTS

3.1 The load test shall be required to provide data regarding the load deformation characteristics of the pile upto failure or otherwise specified and the safe design capacity.

3.2 Full details of the equipment proposed to be used and the test set up shall be submitted to the Engineer-in-Charge with detailed sketches for approval. Approval of the Engineer-in-Charge shall also be obtained after the test set up is complete, prior to commencement of loading.

3.3 All measuring devices shall be tested for satisfactory performance and accuracy at an approved institution and a certificate to that effect obtained and submitted to the Engineer-in-Charge prior to use.

Copyright VCS Quality Services Private Limited – All rights reserved

3.4 The test pile shall be constructed using same equipment and technique as for the job piles.

3.5 A minimum time period of one week shall be allowed between the time of installation and testing in case of a precast pile and not less than four weeks from the time of casting in case of a cast-in-situ pile.

3.6 RECORDS

A full record giving all details of the test in the Performa shown in Appendix-1 shall be submitted in triplicate to the Engineer-in-Charge immediately on completion of each test. The record shall also include the plot of load time settlement characteristics of piles.

4.0 VERTICAL LOADING TESTS

4.1 EQUIPMENT AND TEST SET-UP

4.1.1 TEST PILE

a. The test pile shall be decided by the Engineer-in-Charge. It may be one of the working piles or a separate test pile.

b. The head of the test pile shall be brought to the proper level and provided with a pile cap with a level and plane surface and with adequate space for proper seating of a jack and dial gauges.

c. Test pile surface shall be prepared for testing purposes on the expiry of one week after casting the pile.

4.1.2 LOADING SYSTEMS

a. Loading shall be applied by the reaction method consisting of a hydraulic jack centrally against a loaded platform. Supports of the platforms shall be adequately designed. Special anchor piles or any other suitable type of anchorage systems may be used. However, use of the uplift capacity of neighbouring piles for providing the reaction shall normally not be permitted.

b. The loading system shall be adequate to ensure that the test can be carried upto the specified limit. The reaction to be made available for the test shall be atleast 25% greater than the maximum jacking force required.

4.1.3 MEASURING SYSTEM

a. Loading on Piles

The load applied on the pile shall be recorded on a calibrated pressure gauge mounted on the jack.

b. Settlement of Pile

 Copyright VCS Quality Services Private Limited – All rights reserved

i. Settlement of the pile shall be recorded by dial gauges suspended from datum bars. Four dial gauges of 0.01 mm sensitivity shall be positioned on four corners around the pile.

ii. The datum bars shall have rigid supports preferably of concrete pillars or steel sections, embedded well into the ground. The supports shall be located more than three times the pile diameter, subject to a minimum of 1.5m, clear away from the pile face and also sufficiently away from the supports of the loaded platform to avoid any disturbance on these accounts. Movements near the supports of the datum bar shall be avoided while the test is in progress.

4.2 METHOD OF CONDUCTING TEST

The test shall be carried out by the direct method of loading in successive increments or by the cyclic loading method as specified and as directed by the Engineer-in-Charge.

4.2.1 DIRECT METHOD OF LOADING IN SUCCESSIVE INCREMENTS

The test shall be carried out as per the procedure outlined.

a. The load shall be applied to the pile top in increments of about one fifth of the rated capacity of the pile or as specified. Settlement readings shall be taken before and after the application of each new load increment and at 2, 4, 8, 15, 30, 60 minutes and at every two hours until application of the next load increment.

b. Each stage of loading shall be maintained till the rate of movement of the pile top is not more than 0.2 min per hour or until two hours have elapsed, whichever is later.

c. Further loading shall then be continued as in (a) above till one of the following occurs:

i. Yield of soil-pile system occurs causing progressive settlement of the pile exceeding a value of one tenth of the pile diameter.

ii. The loading on the pile top equals twice the rated capacity or as specified in the case of a separate test pile and 1 .5 times the rated capacity of the pile in case of a working pile.

d. Where yielding of the soil does not occur, the full test load shall be maintained on the pile head for 24 hours or more if necessary and settlement readings shall be taken at 6 hours interval during the period.

e. Unloading shall be carried out in the same steps as loading. A minimum of half hour shall be allowed to elapse between two successive stages of load decrement. The final rebound shall be recorded 6 hours after the entire test load has been removed.

f. If so directed by the Engineer-in-Charge, loading and unloading cycles shall be carried out for all load stages within the assumed working load.

g. Assessment of Safe Load

The safe capacity of the pile shall be the least of the following values

 Copyright VCS Quality Services Private Limited – All rights reserved

i. Load corresponding to settlement specified in specific requirements which is based on the nature and type of structure.

ii. 50 percent of the final load at which the total displacement equals 10 percent of the pile diameter in case of uniform diameter piles and 7.5 percent of bulb diameter in case of under-reamed piles.

4.2.2 CYCLIC LOADING TEST

The test shall be carried out as per procedure outlined by IS: 2911-(Part-IV) and as described below

a. The load shall be applied to the pile top in increments of about one fifth the estimated safe capacity of the pile or as specified. Settlement readings shall be taken before and after the application of each new load increment at 2, 4, 8, 15, 30, 60 minutes and at every two hours until application of the next load increment.

b. Alternate loading and unloading shall be carried out at each stage and the total and net settlements recorded as specified. If so directed by the Engineer-in-Charge, more than one cycle of loading and unloading shall be carried out at any or all of the stages.

c. Each stage of loading or unloading shall be maintained till the rate of movement of the pile top is not more than 0.2mm per hour provided that the minimum period is two hours for loading and one hour for unloading. The following load stages shall however be maintained for longer periods as given below

i. At load of 1.5 times assumed safe capacity (for routine test only) -24 hrs.

ii. At load of twice assumed safe capacity (for initial test only) - 24 hrs.

The loading shall be continued till one of the following occurs

i. Yield of the soil pile systems occurs causing progressive settlement exceeding one tenth of the pile diameter.

ii. The loading on the pile top equals twice the estimated safe load in case of a separate test pile and 1.5 times the rated capacity of the pile in case of a working pile.

d. Assessment of Safe Load

The safe capacity of the pile shall be the least of the following

i. Load corresponding to settlement specified in specific requirements which is based on the nature and type of structure.

ii. Half of the final load at which the total settlement equals one tenth of the pile diameter.

5.0 LATERAL LOADING TEST

5.1 EQUIPMENT AND TEST SET-UP

5.1.1 TEST PILE

Copyright VCS Quality Services Private Limited – All rights reserved

The test pile shall be decided by the Engineer-in-Charge. It may be one of the working piles or a separate test pile.

The test pile shall be cut off at the proper level and provided with a cap with vertical plane sides having an adequate area for proper seating of the jack and dial gauges.

5.1.2 LOADING SYSTEM

Loading shall be applied by an hydraulic jack of adequate capacity, abutting the pile horizontally and reacting against a suitable system. The reaction may be provided by the wall of the excavated pit when the test is being conducted below ground level or by a neighbouring pile in which case thrust pieces shall be inserted on either end of the jack to make up the gap.

5.1.3 MEASURING SYSTEM

a. Lateral load applied on the pile shall be measured by a calibrated pressure gauge mounted on the jack, having a least count of 500 kg.

b. Deflection of the pile head shall be measured by dial gauges, fixed to datum bars and having a least count of 0.01 mm. The datum bars shall be provided with rigid supports as described in Clause 4.1.3 b (ii) above.

5.2 METHOD OF CONDUCTING TESTS

The test shall be carried out in accordance with the provisions of IS: 291I-(Part-IV) and as detailed below

5.2.1 Loading shall be applied in increments of 500 kgs or as specified.

5.2.2 Each stage shall be maintained for a period till the rate of movement of the pile head is not more 0.2 mm/hr or 1 hour whichever is greater.

5.2.3 LOADING SHALL BE CONTINUED TILL ONE OF THE FOLLOWING OCCURS

a. Deflection of the pile head exceeds 12 mm.

b. The applied load on the pile is twice the assumed lateral load capacity of the pile in case of a separate test pile and 1.5 times the rated capacity in the case of a working pile

5.2.4 ASSESSMENT OF SAFE LOAD

The safe load shall be the smaller of the following

a. Half of the final load for which the total deflection is 12 min.

b. Load corresponding to 5 mm total deflection
Note: The deflection is at the cut off level of the pile.

6.0 PULL OUT CAPACITY OF PILES

6.1 EQUIPMENT AND TEST SET UP

6.1.1 TEST PILE

Copyright VCS Quality Services Private Limited – All rights reserved

a. The test pile shall be decided by the Engineer-in-Charge. The test shall be conducted on separate pile installed specifically for this purpose.

b. The test pile shall be built upto the proper length and the head provided with suitable arrangements for anchoring the load applying system.

6.1.2 LOADING SYSTEM

Load shall be applied using an approved reaction system. Uplift force on the pile may be applied directly to the test pile or through a lever system. The reaction may be provided by neighbouring piles or blocks may be constructed for the purpose. A hydraulic jack shall be used for load application.

6.1.3 MEASURING SYSTEM

a. Load applied by jack shall be measured by a calibrated pressure gauge with a least count of 1000 kgs.

b. Movement of the pile shall be measured by dial gauges, fixed to datum bar and having a least count of 0.01 mm. A minimum of two dial gauges, placed diametrically opposite shall be used. Datum bars shall be provided with rigid supports as described in 4.1.3 b (ii) above.

6.2 METHOD OF CONDUCTING TEST

The test shall be conducted as outlined below

6.2.1 Loading shall be applied to the pile top in increments of one fifth the rated capacity of pile.

6.2.2 Each stage shall be maintained for a period till the rate of movement of the pile head is not more than 0.2 mm/hr or one hour, whichever is greater.

6.2.3 Loading shall be continued till one of the following occurs

a. Yield of soil pile system occurs causing progressive movement of the pile exceeding 12 mm.

b. The loading on the pile top equals twice the estimated safe load or as specified.

6.3 ASSESSMENT OF SAFE LOAD

The safe capacity of the pile shall be the least of the following:

a Two-thirds of load at which the total displacement is 12mm or the load corresponding to a specified permissible uplift, and

b. Half of the load at which the load-displacement curve shows a clear break (downward trend).

7.0 COMBINED VERTICAL AND LATERAL LOADING

7.1 EQUIPMENT AND TEST SET-UP

 Copyright VCS Quality Services Private Limited – All rights reserved

7.1.1 The equipment and test set up shall be same as described in Clause 3. In addition a platform shall be constructed on the pile top, and loaded to 10 times the pile capacity in vertical loading.

The pile shall be first subjected to the full vertical load. The lateral load shall commence after all settlements due to the vertical load have ceased and while the full vertical load is in position.

7.1.2 The loading system, measuring system and recording of the results shall be the same as described in caluse-5.0.

7.2 METHOD OF CONDUCTING TEST AND ASSESSMENT OF SAFE LOAD

This shall be in accordance with the provision of clause 5.2 above.

8.0 SPECIAL TYPE OF LOADING

This shall include evaluating the pile response to vibratory loads, both horizontal and vertical in nature. The test set up and method of conducting the test shall be covered under specific requirements.

Copyright VCS Quality Services Private Limited – All rights reserved

APPENDIX 1

PILE LOAD TEST RECORD

Vertical/Laterl/Pull Out Test

Pile No..... Date of..... WT of Hammer.....

Type..... ..... Driving..... AVR. Drop of Hammer.....

Diameter (Cm)..... Casting..... Total No of Blows.....

Length below G. L(M) ..... Commence of Test ..... Sum of Temporary Compression in curs.....

Location..... Completion of Test..... Ground level.....

Type of Test : Direct/Cyclic Loading

Date	Time	Total load (Hr.)	Load on (T)	Load off (T)	Total load (t)	Settlement (deflection) Gauge mm		AVR. Settlement (deflection)mm		Rebound mm	Remarks
						I	II	Total	Net		

Copyright VCS Quality Services Private Limited – All rights reserved

Energising Quality

VCS Quality Services Pvt Ltd

STANDARD SPECIFICATION
FOR
FLOOR FINISHING

VCS-SS-CS-6040

03	31.01.2022	NV	GDS	HK	GW
02	28.02.2020	NV	GDS	RKB	SK
01	16.10.2019	MA	MO	AD	SK
00	05.07.2017	MA	MO	AD	SK
Rev. No	Date	Prepared By	Checked By	Approved By	Authorized By

UNCONTROLLED COPY	:	**If printed**
CONTROLLED COPY	:	**If in soft and signed**

Copyright VCS Quality Services Private Limited – All rights reserved

REVISION RECORD						
Rev.	**Revision Date**	**Prepared by**	**Checked by**	**Approved by**	**Authorized by**	**Revision Description**
00	05.07.2017	MA	MO	RKB	AD	Issued for use as Standard
01	16.10.2019	MA	MO	RKB	SK	
02	28.02.2020	NV	GDS	RKB	SK	New revision system updated
03	31.01.2022	NV	GDS	HK	GW	VCS QMS Integration

Copyright VCS Quality Services Private Limited – All rights reserved

ABBREVIATION

m	Metre
mm	Millimetre
m^2	Square Metre
m^3	Cubic Metre
Kg	Kilogram
IS	Indian Standard
BIS	Bureau of Indian Standards
PVC	Poly Venile Chloride
RCC	Reinforcement Cement Concrete
PCC	Plain Cement Concrete

Copyright VCS Quality Services Private Limited – All rights reserved

CONTENTS

1.0 SCOPE 5
2.0 REFERENCES 5
3.0 CEMENT CONCRETE FLOORING 5
4.0 CEMENT CONCRETE GRANOLITHIC FLOORING 7
5.0 HEAVY DUTY FLOORING 8
6.0 PRECAST HYDRAULICALLY PRESSED CEMENT TILES 9
7.0 CEMENT PLASTER SKIRTING 10
8.0 CAST-IN-SITU TERRAZZO FINISH 11
9.0 PRECAST HYDRAULICALLY PRESSED TERRAZZO TILES 13
10.0 TILE WORK 14
11.0 KOTA STONE FINISH 15
12.0 MARBLE STONE FLOORING 17
13.0 P.V.C. FINISH 18
14.0 ACID RESISTANT TILES 19
15.0 EPOXY COATING 19
16.0 MEASUREMENT AND RATE (THIS CLAUSE SHALL BE APPLICABLE FOR ITEM RATE TENDERS ONLY) 20

Copyright VCS Quality Services Private Limited – All rights reserved