ENERGISING QUALITY

VCS QUALITY SERVICES PVT. LTD.

STANDARD SPECIFICATION FOR FABRICATION AND ERECTION OF PIPING

VPC-SS-PP-2507

00	28.01.2020	MB	AK	AD	SK
Rev. No	**Date**	**Prepared By**	**Checked By**	**Approved By**	**Authorized By**

UNCONTROLLED COPY	:	**If printed**
CONTROLLED COPY	:	**If in soft and signed**

Copyright VCS Quality Services Private Limited – All rights reserved

Rev.	Revision Date	Prepared by	Checked by	Approved by	Authorized by	Revision Description
00	28.01.2020					
		MB	AK	AD	SK	

Copyright VCS Quality Services Private Limited – All rights reserved

Abbreviations:

AS	:	Alloy Steel
ASME	:	American Society of Mechanical Engineers
CI	:	Cast Iron
CS	:	Carbon Steel
HMTD	:	Heat & Mass Transfer Division
IBR	:	Indian Boiler Regulations
LTCS	:	Low Temperature Carbon Steel
NACE	:	National Association of Corrosion Engineers
NB	:	Nominal Bore
NDT	:	Non Destructive Testing
P & ID	:	Piping and Instrumentation Diagram
PMI	:	Positive Material Identification
SS	:	Stainless Steel
SMMS	:	Specialist Material & Maintenance Services

Copyright VCS Quality Services Private Limited – All rights reserved

CONTENTS

1.0 SCOPE 4
2.0 SCOPE OF WORK OF CONTRACTOR 4
3.0 BASIS FOR WORK 6
4.0 FABRICATION 7
5.0 ERECTION 10

Copyright VCS Quality Services Private Limited – All rights reserved

1.0 SCOPE

This specification covers general requirements of fabrication and erection of above ground and trench piping systems at site. The specification covers the scope of work of Contractor, basis of work to be carried out by Contractor and standards, specifications and normal practice to be followed during fabrication and erection by the Contractor.

2.0 SCOPE OF WORK OF CONTRACTOR

Generally the scope of work of Contractor shall include the following:

2.1 Transportation of required piping materials (as described in C1.2.1.1), pipe support (material as described in C1. 2.3) and all other necessary piping materials from Owner's storage point or Contractor's storage point (in case of Contractor's scope of supply) to work site/shop including raising store requisitions for issue of materials in the prescribed format & maintaining an account of the materials received from Owner's stores.

2.1.1 Piping materials include the following but not limited to the same.

a. Pipes (All sizes and schedule)

b. Flanges (All sizes, types & Pressure ratings).

c. Fittings (All sizes, types and schedule)

d. Valves (All sizes, types and Ratings)

e. Gaskets (All sizes, types & Ratings)

f. Bolts, Nuts or M/C Bolts (All types)

g. Expansion Joint/Bellows (All types)

h. Specialty items like online filters, ejectors, sample coolers, steam traps, strainers, air traps, springs, silencers, snubbers, steam and condensate manifolds, injection nozzles, MOVs, sight glass, spray nozzles, integrated steam traps, hoses, hose couplings, etc.

i. Online instruments like control valve, orifice flange, rotameter, safety valves, restriction orifice, rupture disc, de-super heaters, corrosion probes, annubar, magnetic flow meter, ultrasonic flow meter, Coriolis mass flow meters, venturi PG/PT/ Flow transmitter, ejectors, static mixers, flame arrestors, thermal flow switches, pre-fabricated hook-ups etc.

j. Shutdown Valves with and without fire box.

2.2 Shop & field fabrication and erection of piping in accordance with documents listed under C1.3.0 i.e. 'BASIS OF WORK' including erection of all piping materials enumerated above.

2.3 Fabrication and erection of pipe supports like shoe, saddle, guide, stops, anchors, clips, cradles, hangers, tum-buckles, supporting fixtures, bracket cantilevers, struts, tee-posts including erection of spring supports, sway braces, dummy pipes, corrosion pads/protection shields, low friction pads, clamps, special support, expansion bellows, steam and condensate manifolds supports etc. Corrosion Pads/Protection shields, stiffeners and stiffening rings, if not covered in the specifications/standards, shall be of the same material as of parent pipes.

2.4 Site fabrication of Piping items

Site fabrication of Piping items shall include but not be limited to the following

Copyright VCS Quality Services Private Limited – All rights reserved

2.4.1 Fabrication of piping specials like special radius bends, reducers, mitres etc.

2.4.2 Fabrication of plain and threaded nipples from pipes as required during erection.

2.4.3 Fabrication of swage nipples as and when required.

2.4.4 Fabrication of odd angle elbow like 60°, 30° or any other angle from 90°/45° elbows as and when required.

2.4.5 Fabrication of flange, reducing flange, blind flange, spectacle blinds as and when required.

2.4.6 Fabrication of stub-in connection with or without reinforcement.

2.4.7 Grinding of edges of pipes, fittings, flanges etc. to match mating edges of uneven/different thickness wherever required.

2.4.8 Fabrication of circular pipe for steam rings, fire water lines, utility lines.

2.4.9 Threading of all small bore piping as per piping material specifications.

2.4.10 Drilling on blind flange for inserting / joining small bore lines.

2.4.11 Fabrication and welding of reinforcement pads at branch pipe locations wherever required.

2.4.12 Equipment nozzle reinforcement with pads, jacket & stiffeners wherever required.

2.4.13 Fabrication of injection nozzles as per details provided wherever required.

2.4.14 Fabrication of chain operation arrangement for valves, wherever required. All material required for this modification shall be supplied by Contractor.

2.4.15 Fabrication and erection in position of funnels required for OWS/ SS/ Condensate blow down system as per direction of Engineer-in-charge.

2.4.16 Grinding & finishing of uneven surfaces/ joints after welding. Internal grinding of welds of orifice flanges to render smooth surface.

2.4.17 Tapping and drilling of holes in flanges, blind flanges, piping connections for jack screw, if required.

2.4.18 Providing bird screens at the outlet of lines open to atmosphere.

2.5 Modifications like providing additional cleats, extension of stem of valve, locking arrangement of valves etc. as and when required.

2.6 Piping isometrics for main process/utility lines shall be provided to the Contractor.

Preparation of miscellaneous small bore isometrics with bill of materials for process and utility lines (up to 1½" size) like instruments & pump flushing / cooling, sample connection, purging, pump casing vents & drains, pump base plate drains, control valve drains / vent to flare, instrument drains & vents, steam tracing (non-IBR) from steam supply stations up to condensate recovery station, and lines specified as field routed within the Unit battery limit as and when required are in Contractor's scope of work. Approval for these isometrics prepared by the Contractor shall be taken from Engineer-in-charge before erection.

Small bore piping isometrics given by Owner shall be rechecked by Contractor before erection and installation.

2.7 Obtaining approval for drawings prepared by Contractor from statutory authority, if required.

2.8 Spun concrete lining of the inside of pipes 3" NB & above including fittings and flanges as

Copyright VCS Quality Services Private Limited – All rights reserved

required in accordance with specification.

2.9 Rubber lining inside pipes, fittings, flanges as and when required, in accordance with specification.

2.10 Radiography, stress relieving, dye penetration, magnetic particle test etc. as required m specification.

2.11 Performing PMI using alloy analyzers as per Standard Specification for Positive Material Identification at Construction Sites, VPC-SS-PP-2502.

2.12 Casting of concrete pedestals and Fabrication and erection of small structures/ platforms for pipe supports and valve operation / attending some instruments, spectacle blinds etc., providing brackets, modification / extension of platforms, providing additional platforms / ladders for improving / providing accessibility.

2.13 Providing insert plates with anchor fasteners in concrete structures / paved floors and repair of platform gratings around pipe openings and providing suitable members for support under the platform grating.

2.14 Making material reconciliation statement and return of Owner's supply left over materials to Owner's storage.

2.15 Flushing and testing of all piping systems as per standard specification for inspection, flushing and testing of piping systems (Specification No. 6-44-0013). The accessories required for blinding the line like flange, blind flange, gasket (all sizes, type and rating), stud-bolts, flexible hoses etc. are to be arranged by the Contractor. During flushing the discharged water / air shall be drained / routed as directed by the Engineer - In Charge.

2.16 Contractor shall prepare welding specifications for all weld joints where dissimilar welding will be performed, and obtain approval from VCS.

2.17 Contractor to ensure meeting all requirements for carrying out work in shutdown/running plant.

2.18 Pickling (as and when applicable) as per Job specification(s) for chemical cleaning of CS suction piping of compressors, SS Piping, Weldment etc., as applicable.

2.19 Chemical Cleaning/ Hydro jet cleaning as per marked-up P&IDs with supply of chemicals, consumables, DM water, equipment’s, boilers, coupons, tools & tackles and other testing equipment’s required for the same.

3.0 BASIS FOR WORK

3.1 The complete piping work shall be carried out in accordance with the following:

3.1.1 "Approved for Construction" drawings and sketches issued by VCS to the Contractor - Plans and/or Isometrics.

3.1.2 "Approved for Construction" drawings and sketches issued by Tum-key bidders to the Contractor - Plans and/or Isometrics.

3.1.3 Approved Process Licensor's standards and specifications.

3.1.4 Drawings, sketches and documents prepared by Contractor duly approved by Engineer-in- Charge (such as isometrics of small bore piping and offsite piping etc.).

3.1.5 VCS specifications / documents as below:

Copyright VCS Quality Services Private Limited – All rights reserved

a. Process and Instrument Diagram.

b. Job Piping Materials Specification (****-6-44-0005). **** denotes job number.

c. Piping support, engineering standards.

d. Line list

e. Piping support indices (only in offsite), if supports are not shown in plan.

f. Job specification of Non-destructive Requirement of Piping (VPC-SS-PP-0036)

g. Job Welding specification for fabrication of piping (VPC-SS-PP-0040).

h. Any other VCS or OTHER specifications attached with Piping Material Specification or special condition of contract (such as standard for cement lining of pipe, standard of jacketed piping, standard for steam tracing, Dimensional Tolerances etc.)

i. Standard specification for positive material identification (PMI) at construction sites, 6-82-0002

j. Standard Spec for application of torque & hydraulic bolt tension for flange joints (6-76-0002) and its addendum, if any.

3.1.6 Following codes, standards and regulations

a.	ASME B 31.3	:	Process Piping
b.	ASME Sec. VIII	:	Code for unfired pressure vessel.
c.	IBR Regulations		
d.	ASME Sec. IX	:	Qualification standard for welding and brazing procedures, welders, brazers and welding and brazing operators.
e.	NACE Std.	:	Code for Sour Services material requirements MR-0175/MR0103/Job spec(NACE), as applicable

Note: All codes referred shall be latest edition, at the time of award of contract.

3.2 Deviations

Where a deviation from the "Basis of Work" and approved job procedure described above is required or where the basis of work does not cover a particular situation, the matter shall be brought to the notice of Engineer-in-Charge and the work carried out only after obtaining written approval from him in each case.

4.0 FABRICATION

4.1 Piping Material

Pipe, pipe fittings, flanges, valves, gaskets, studs bolts etc. used in a given piping system shall be strictly as per the "Piping Material Specification" for the "Pipe Class" specified for that system. To ensure the above requirement, all piping material supplied by the Owner / Contractor shall have proper identification marks as per relevant standards / VCS specifications / Licensors specification. Contractor shall provide identification marks on left over pipe lengths wherever marked up pipe lengths have been fabricated / erected. Material-

Copyright VCS Quality Services Private Limited – All rights reserved

traceability is to be maintained for A.S., S.S., NACE, L TCS, material for Hydrogen service and other exotic materials by way of transferring heat number, etc. (hard punching) as per approved procedure. This shall be in addition to colour coding for all piping materials to avoid mix-up.

For the purpose of common understanding the construction job procedure, to be submitted by the Contractor, shall include proposal for

- Maximizing prefabrication, inspection and testing at fabrication shop with minimum field joints.
- Positive material identification, handling, storage & preservation.

4.2 Dimensional Tolerances

The Contractor shall be responsible for working to the dimensions shown on the drawings. However, the Contractor shall bear in mind that there may be variations between the dimensions shown in the drawing and those actually existing at site due to minor variations in the location of equipment's, inserts, structures etc. To take care of these variations "Field Welds" shall be provided during piping fabrication. An extra pipe length of 100 mm over and above the dimensions indicated in the drawing may be left on one side of the pipe at each of the field welds. During erection, the pipe end with extra length at each field weld shall be cut to obtain the actual dimension occurring at site. Isometrics, if supplied may have the field welds marked on them. However, it is the responsibility of the Contractor to provide adequate number of field welds. In any case no extra claims will be entertained from the Contractor on this account. Wherever errors / omissions occur in drawings and Bills of Materials it shall be the Contractor's responsibility to notify the Engineer-in-Charge prior to fabrication or erection.

4.3 IBR Piping

4.3.1 Contractor shall obtain approval for the piping systems failing under purview of IBR from the statutory Indian Boiler Regulations (IBR) authority of the state where the plant is situated. The Owner shall provide documentation for the IBR System. The Contractor shall carry out the fabrications, erection and testing of this piping as per requirements of Indian Boiler Regulations and to the entire satisfaction of the local Boiler Inspector. The Contractor shall also get the approval of IBR inspector for all fabrication and testing done by him at his own cost. All certificates of approval shall be in proper IBR forms.

4.3.2 IBR Package for residual, field routed and site modified steam lines shall be prepared by the Contractor. IBR approval for the same shall be in Contractor's scope, at his own cost.

4.4 Pipe Joints

The piping class of each line specifies the type of pipe joints to be adopted. In general, joining of lines 2" and above in process and utility piping shall be accomplished by butt- welds. Joining of lines 1-1/2" and below shall be by socket welding/butt welding/threaded joints as specified in "Piping Material Specifications". However, in piping 1-1/2" and below where socket welding/ threaded joints are specified butt - welds may be used with the approval of Engineer-in-Charge for pipe to pipe joining in long runs of piping. This is only applicable for non-galvanized piping without lining.

Flange joints shall be used at connections to Vessels, Equipment's, Valves and where required for ease of erection and maintenance as indicated in drawings.

Copyright VCS Quality Services Private Limited – All rights reserved

4.5 Butt Welded and Socket Welded Piping

End preparation, alignment and fit-up of pipe pieces to be welded, welding, pre-heating, post-heating and heat treatment shall be as described in the Job welding specification (VPC-SS-PP-0040) and NDT specification (VPC-SS-PP-0036).

4.6 Screwed Piping

In general, Galvanized piping shall have threads as per IS:554 or ANSI B2.1 NPT as required to match threads on fittings, valves etc. All other piping shall have threads as per ANSI B2.1, tapered unless specified otherwise.

Threads shall be clean cut, without any burrs or stripping and the ends shall be reamed. Threading of pipes shall be done preferably after bending, forging or heat treating operations. If this is not possible, threads shall be gauge checked and chased after welding heat treatment etc.

During assembly of threaded joints, all threads of pipes and fittings shall be thoroughly cleaned of cuttings, dirt, oil or any other foreign matter. The male threads shall be coated with thread sealant and the joint tightened sufficiently for the threads to seize and give a leak-proof joint. Threaded joints to be seal-welded shall be cleaned of all foreign matter, including sealant and made up to full thread engagement before seal welding.

4.7 Flange Connections

All flange facings shall be true and perpendicular to the axis of pipe to which they are attached. Flanged bolt holes shall straddle the normal centerlines unless different orientation is shown in the drawing.

Wherever jack screws are to be provided, drilling and tapping for the jack screws in the flange, shall be done as per VCS Standard before welding it to the pipe.

4.8 Branch Connections

Branch connections shall be as indicated in the piping material specifications. For end preparation, alignment, spacing, fit-up and welding of branch connections refer welding specifications. Templates shall be used wherever required to ensure accurate cutting and proper fit-up.

For all branch connections accomplished either by pipe to pipe connections or by using forged tees the rates quoted for piping shall be inclusive of this work.

Reinforcement pads shall be provided wherever indicated in drawings / specifications etc.

4.9 Bending

Bending shall be as per ASME B31.3 except that corrugated or creased bends shall not be used.

Cold bends for lines 1-1/2" and below, with a bend radius of 5 times the nominal diameter shall be used as required in place of elbows wherever allowed by piping specifications. Bending of pipes 2" and above may be required in some cases like that for headers around heaters, reactors etc.

The completed bend shall have a smooth surface, free from cracks, buckles, wrinkles, bulges, flat spots and other serious defects. They shall be true to dimensions. The flattening of a bend, as measured by the difference between the maximum and minimum diameters at any

Copyright VCS Quality Services Private Limited – All rights reserved

cross-section, shall not exceed 8% and 3% of the nominal outside diameter, for internal and external pressure respectively.

4.10 Forging and Forming

Forging and forming of small bore fittings, like reducing nipples for piping 1-1/2" and below, shall be as per ASME B 31.3.

4.11 Mitre Bends and Fabricated Reducers

The specific application of welded mitre bends and fabricated reducers shall be governed by the Piping Material Specifications. Reducers shall be fabricated as per directions of Engineer-in-Charge. The radiographic requirements shall be as per Material Specifications for process and utility systems and NDT Specification for steam piping under IBR, radiographic requirements of IBR shall be complied with.

4.12 Cutting and Trimming of Standard Fittings & Pipes

Components like pipes, elbows, couplings, half-couplings etc. shall be cut / trimmed / edge prepared wherever required to meet fabrication and erection requirements, as per drawings and instructions of Engineer-in-Charge. Nipples as required shall be prepared from straight length piping.

4.13 Galvanized Piping

Galvanized carbon steel piping shall be completely cold worked, so as not to damage galvanized surfaces. This piping involves only threaded joints and additional external threading on pipes may be required to be done as per requirement.

4.14 Jacketed Piping

The Jacketing shall be done in accordance with VCS Specification or Licensors specification as suggested in material specification or special condition of contract.

Pre-assembly of jacketed elements to the maximum extent possible shall be accomplished at shop by Contractor. Position of jump-over and nozzles on the jacket pipes, fittings etc. shall be marked according to pipe disposition and those shall be prefabricated to avoid damaging of inner pipe and obstruction of jacket space. However, valves, flow glasses, in line instruments or even fittings shall be supplied as jacketed.

4.15 Shop Fabrication / Prefabrication

The purpose of shop fabrication or pre-fabrication is to minimize work during erection to the extent possible. Piping spool, after fabrication, shall be stacked with proper identification marks, so as facilitate their withdrawal at any time during erection. During this period all flange (gasket contact faces) and threads shall be adequately fabricated by coating with removable rust preventive. Care shall also be taken to avoid any physical damage to flange faces and threads.

4.16 Miscellaneous

4.16.1 Contractor shall fabricate miscellaneous elements like flash pot, seal pot, sample cooler, supporting elements like tum-buckles, extension of spindles and interlocking arrangement of valves, operating platforms as required by Engineer-in-Charge.

4.16.2 Spun Concrete Lining

Copyright VCS Quality Services Private Limited – All rights reserved

The work of inside spun concrete lining of pipes and specials of diameter 3" and above shall be done as per material specifications and special condition contract.

4.16.3 Fabrication of pipes from plate

Pipes shall be fabricated at site as and when required as per the specifications and the actual Piping Material Specification.

5.0 ERECTION

5.1 Cleaning of Piping before Erection

Before erection all pre-fabricated spool pieces, pipes, fittings etc. shall be cleaned inside and outside by suitable means. The cleaning process shall include removal of all foreign matter such as scale, sand, weld spatter chips etc. by wire brushes, cleaning tools etc. and blowing with compressed air/or flushing out with water. Special cleaning requirements for some services, if any, shall be as specified in the piping material specification or isometric or line list. S.S jacketed piping requiring pickling shall be pickled to remove oxidation and discoloring due to welding.

5.2 Piping Routing

No deviations from the piping route indicated in drawings shall be permitted without the consent of Engineer-in-Charge.

Pipe to pipe, pipe to structure / equipment's distances / clearances as shown in the drawings shall be strictly followed as these clearances may be required for the free expansion of piping / equipment. No deviations from these clearances shall be permissible without the approval of Engineer-in-Charge.

In case of fouling of a line with other piping, structure, equipment etc. the matter shall be brought to the notice of Engineer-in-Charge and corrective action shall be taken as per his instructions.

5.3 Cold Pull

Wherever cold pull is specified, the Contractor shall maintain the necessary gap, as indicated in the drawing. Confirmation in writing shall be obtained by the Contractor from the Engineer-in-Charge, certifying that the gap between the pipes is as indicated in the drawing, before drawing the cold pull. Stress relieving shall be performed before removing the gadgets for cold pulling.

5.4 Slopes

Slopes specified for various lines in the drawings / P&ID shall be maintained by the Contractor. Corrective action shall be taken by the Contractor in consultation with Engineer-in-Charge wherever the Contractor is not able to maintain the specified slope.

5.5 Expansion Joints / Bellows

Installation of Expansion Joints/Bellows shall be as follows:

5.5.1. All Expansion joints / Bellows shall be installed in accordance with the specification and installation drawings, supplied to the Contractor.

5.5.2. a. Upon receipt, the Contractor shall remove the Expansion Joints / Bellows from the case(s) and check for any damage occurred during transit.

Copyright VCS Quality Services Private Limited – All rights reserved

b. The Contractor shall bring to the notice of the Engineer-in- Charge any damage done to the bellows / corrugations, hinges, tie-rods, flanges/ weld ends etc.

c. Each Expansion Joint / Bellow shall be blown free of dust / foreign matter with compressed air or cleaned with a piece of cloth.

5.5.3. a. For handling and installation of Expansion Joints, great care shall be taken while aligning. An Expansion Joints shall never be slinged from bellows corrugations/ external shrouds, tie / rods, angles.

b. An Expansion Joints / Bellow shall preferably be slinged from the end pipes / flanges or on the middle pipe.

5.5.4. a. All Expansion Joints shall be delivered to the Contractor at "Installation length", maintained by means of shipping rods, angles welded to the flanges or weld ends or by wooden or metallic stops.

b. Expansion Joints stop blocks shall be carefully removed after hydrostatic testing. Angles welded to the flanges or weld ends shall be trimmed by saw as per manufacturer's instructions and the flanges or weld ends shall be ground smooth.

5.5.5. a. The pipe ends in which the Expansion Joint is to be installed shall be perfectly aligned or shall have specified lateral deflection as noted on the relevant drawings.

b. The pipe ends / flanges shall be spaced at a distance specified in the drawings.

5.5.6. The Expansion Joint shall be placed between the mating pipe ends / flanges and shall be tack welded/bolted. The mating pipes shall again be checked for correct alignment.

5.5.7. Butt-welding shall be carried out at each end of the expansion joint. For flanged Expansion Joint, the mating flanges shall be bolted.

5.5.8. After the Expansion Joint is installed the Contractor shall ensure that the mating pipes and Expansion Joints are in correct alignment and that the pipes are well supported and guided.

5.5.9. The Expansion Joint shall not have any lateral deflection. The Contractor shall maintain parallelism of restraining rings or bellows convolutions.

5.5.10. Precautions

a. For carrying out welding, earthing lead shall not be attached with the Expansion Joint.

b. The Expansion bellow shall be protected from arc weld spot and welding spatter.

c. Hydrostatic Testing of the system having Expansion Joint shall be performed with shipping lugs in position. These lugs shall be removed after testing and certification IS over.

5.6 Flange Connections

While fitting up mating flanges, care shall be exercised to properly align the pipes and to check the flanges for trueness, so that faces of the flanges can be pulled together, without inducing any stresses in the pipes and the equipment nozzles. Extra care shall be taken for flange connections to pumps, turbines, compressors, cold boxes, air coolers etc. The flange connections to these equipment’s shall be checked for misalignment, excessive gap etc. after the final alignment of the equipment is over. The joint shall be made up after obtaining

Copyright VCS Quality Services Private Limited – All rights reserved

approval of Engineer-in-Charge.

Hydraulic bolt tensioning & torque tensioning shall be performed on flange joints as per the requirements specified in "standard Specification for application of Torque & bolt Tension for flange joints,VPC-SS-PP-0041 and its addendum, if any.

Temporary protective covers shall be retained on all flange connections of pumps, turbines, compressors and other similar equipment's, until the piping is finally connected, so as to avoid any foreign material from entering these equipment's.

The assembly of a flange joint shall be done in such a way that the gasket between these flange faces is uniformly compressed. To achieve this, the bolts shall be tightened in a proper sequence. All bolts shall extend completely through their nuts but not more than 1/4".

Steel to C.I. flange joints, if any, shall be made up with extreme care, tightening the bolts uniformly after bringing flange flush with gaskets with accurate pattern and lateral alignment.

5.7 Vents and Drains

High point vents and low point drains shall be provided as per the instructions of Engineer-in-Charge, even if these are not shown in the drawings. The details of vents and drains shall be as per piping material specifications / job standards.

5.8 Valves

Valves shall be installed with spindle / actuator orientation / position as shown in the layout drawings. In case of any difficulty in doing this or if the spindle orientation / position is not shown in the drawings, the Engineer-in-Charge shall be consulted and work done as per his instructions. Care shall be exercised to ensure that globe valves, check valves, and other uni- directional valves are installed with the "Flow direction arrow "on the valve body points in the correct direction. If the direction of the arrow is not marked on such valves, this shall be done in the presence of Engineer-in-Charge before installation.

Fabrication of stem extensions, locking arrangements and interlocking arrangements of valves (if called for), shall be carried out as per drawings / instructions of Engineer-in-Charge.

5.9 Instruments

Installation of in-line instruments such as control valve, orifice flange, rotameter, safety valves, restriction orifice, rupture disc, de-super heaters, corrosion probes, annubar, magnetic flow meter, ultrasonic flow meter, Coriolis mass flow meters, venturi PG/PTI Flow transmitter, ejectors, etc. and Shut Down Valves with fireboxes shall form a part of piping erection work.

Fabrication and erection of piping upto first block valve / nozzle / flange for installation of offline Instruments for measurement of level, pressure, temperature, flow etc. shall also form part of piping construction work. The limits of piping and instrumentation work will be shown in drawings / standards / specifications. Orientations / locations of take-offs for temperature, pressure, flow, level connections etc. shown in drawings shall be maintained.

Flushing and testing of piping systems which include instruments mentioned above and the precautions to be taken are covered in flushing, testing and inspection of piping (VCS Spec.

Copyright VCS Quality Services Private Limited – All rights reserved

VPC-SS-PI-0007). Care shall be exercised and adequate precautions taken to avoid damage and entry foreign matter into instruments during transportation, installation, testing etc.

5.10 Line Mounted Equipment's / Items

Installation of line mounted items like filters, strainers, steam traps, air traps, de-super heaters, ejectors, samples coolers, mixers, flame arrestors, sight glasses etc., including their supporting arrangements shall form part of piping erection work.

5.11 Bolts and Nuts

The Contractor shall apply molycoat grease mixed with graphite powder (unless otherwise specified in piping classes) all bolts and nuts during storage, after erection and wherever flange connections are broken and made-up for any purpose whatsoever. The grease and graphite powder shall be supplied by the Contractor within the rates for piping work.

5.12 Pipe Supports

Pipe supports are designed and located to effectively sustain the weight and thermal effects of the piping system and to prevent its vibrations. Location and design of pipe supports will be shown in drawings for lines 2" NB & above. For lines $1^1/_2$"NB & below Contractor shall locate and design pipe supports in line with VCS Std's. In case of IBR Lines $1^1/_2$"NB & below only indicative supporting shall be provided & detailing of such supports is in Contractor's scope. Contractor shall obtain approval of Engineer - in - Charge on drawings prepared by Contractor, before erection. However, any extra supports desired by Engineer- in-Charge shall also be installed.

No pipe shoe / cradle shall be offset unless specifically shown in the drawings.

Hanger rods shall be installed inclined in a direction opposite to the direction in which the pipe move during expansion.

Pre-set pins of all spring supports shall be removed only after hydrostatic testing and insulation is over. Springs shall be checked for the range of movement and adjusted if necessary to obtain the correct positioning in cold condition. These shall be subsequently adjusted to hot setting in operating condition. The following points shall be checked after installation, with the Engineer-in-Charge and necessary confirmation in writing obtained certifying that:

- All restraints have been installed correctly.
- Clearances have been maintained as per support drawings.
- Insulation does not restrict thermal expansion.
- All temporary tack welds provided during erection have been fully removed.
- All welded supports have been fully welded.

Copyright VCS Quality Services Private Limited – All rights reserved

ENERGISING QUALITY

VCS QUALITY SERVICES PVT. LTD.

STANDARD SPECIFICATION
FOR
NON DESTRUCTIVE EXAMINATION
REQUIREMENTS OF PIPING

VPC – SS – PP - 2508

00	**13.05.2017**	**MB**	**AK**	**AD**	**SK**
Rev. No	**Date**	**Prepared By**	**Checked By**	**Approved By**	**Authorized By**

UNCONTROLLED COPY	**:**	**If printed**
CONTROLLED COPY	**:**	**If in soft and signed**

Copyright VCS Quality Services Private Limited – All rights reserved

REVISION RECORD						
Rev.	**Revision Date**	**Prepared by**	**Checked by**	**Approved by**	**Authorized by**	**Revision Description**
00	28.01.2020					
		MB	AK	AD	SK	

Copyright VCS Quality Services Private Limited – All rights reserved

Abbreviations:

AS	:	Alloy Steel
ASME	:	American Society of Mechanical Engineers
ASTM	:	American Society for Testing & Materials
CS	:	Carbon Steel
DP/LP	:	Dye/Liquid Penetrant
IBR	:	Indian Boiler Regulations
MP	:	Magnetic Particle
PMS	:	Piping Material Specification
SS	:	Stainless Steel

Copyright VCS Quality Services Private Limited – All rights reserved

CONTENTS

1.0 GENERAL 4
2.0 VISUAL EXAMINATION 4
3.0 NON DESTRUCTIVE EXAMINATION 6
4.0 TABLE-1 (with applicable notes) 7

Copyright VCS Quality Services Private Limited – All rights reserved

1.0 GENERAL

1.1 Scope

This specification covers the general requirements for non-destructive examination of shop & field fabricated piping.

1.2 Related Codes & Engineering Standards

Referred codes/ standards are as follows. Latest editions of the Codes/Standards referred to shall be followed.

a) ASME Boiler & Pressure Vessel Codes, Section V & VIII (Div.1) including addenda.

b) ASME B31.3

c) ASME B16.5

d) ASME B16.34

e) Standard Piping Material Specification; XXXX-XX-XX-XXX

f) Standard Specification for Fabrication & Erection of Piping; VPC-SS-PP-2507

g) ASTM EIO

h) Design Guide for Radiography Requirements; VPC-SS-PP-2506

i) Indian Boiler Regulations (IBR)

2.0 VISUAL EXAMINATION

2.1 Weld shall be visually inspected wherever accessible in accordance with the following requirements:

a)	Internal misalignment	1.5 mm or less
b)	Cracks or lack of fusion	not permitted
c)	Incomplete penetration	Depth shall not exceed the lesser of 0.8mm or 0.2 times thickness of thinner component joined by butt-weld. The total length of such imperfections shall not exceed 38 mm in any 150 mm of weld length.
d)	Surface porosity and exposed slag inclusions (For nom. wall thickness 4.7 mm and less)	not permitted
e)	Concave root surface (Suck up)	For single sided welded joints, concavity of the root surface shall not reduce the total thickness of joint, including reinforcement, to less than the thickness of the thinner of the components being joined.
f)	Weld ripples irregularities	2.5 mm or less.

Copyright VCS Quality Services Private Limited – All rights reserved

g) Lack of uniformity in bead width 2.5 mm or less.

h) Lack of uniformity of leg length 2.5 mm or less.

i) Unevenness of bead 2.0 mm or less

j) Weld undercutting 0.8 mm or 1/4 thickness of thinner components joined by butt weld, whichever is less. (shall be smooth finished)

k) Overlap 1.5mm or less

l) Bead deflection 2.5 mm or less

m) External weld reinforcement and internal weld protrusion (when backing rings are not used) shall be fused with and shall merge smoothly into the component surfaces. The height of the lesser projection of external weld reinforcement or internal weld protrusion from the adjacent Base material surface shall not exceed the following limits:

Wall thickness of thinner component joined by butt Weld (mm)	Weld reinforcement or internal protrusion (mm) max
6.4 and under	1.6
Over 6.4 -12.7	1.2
Over 12.7 -25.4	4.0
Over 25.4	4.8

n) Throat thickness of fillet welds:

Nominal thickness of the thinner component x 0.7 or more.

o) Flattening

Flattening of a bend, as measured by difference between the nominal outside diameter and minimum or maximum diameter at any cross section shall not exceed 5 % of the nominal outside diameter of pipe.

p) Reduction of wall thickness

Reduction of wall thickness of a bend, as measured by difference between the nominal thickness and minimum thickness shall not exceed 10 % of the nominal wall thickness of pipe.

2.2 Welds having any of imperfections which exceed the limitations specified in various clauses of 2.1 shall be repaired by welding, grinding or overlaying etc. Number of times of repair welding for the same weld, however shall conform to applicable notes to Table 1- Note 6(b) b.5.

Copyright VCS Quality Services Private Limited – All rights reserved

3.0 NON DESTRUCTIVE EXAMINATION

3.1 The type and extent of weld examination shall be in accordance with Table-1. A11 visual and supplementary methods of girth weld examination shall be in accordance with ASME B31.3 & the requirements of this standard specification.

3.2 Welds between dissimilar materials shall be examined by method & to the extent required for the material having the more stringent examination.

Copyright VCS Quality Services Private Limited – All rights reserved

4.0 TABLE-1 (with applicable notes)

TABLE 1: CLASS, TYPE & EXTENT OF WELD EXAMINATION (CONTD.)

INSPECTION CLASS: II

INSPN. CLASS	SERVICE	MATERIAL (NOTE 3)	P.NO.	TEMP. DEG. C	PRESS. CLASS B16.5/ B16.34	APPLICA-BLE PIPING CLASS	TYPE OF EXAMINATION	TYPE OF WELD EXAMINED				
								GIRTH BUTT WELD	SOCKET WELD (NOTE 2)	ATTAC-HMENT WELD	FAB. BRANCH WELD (NOTE 1)	FAB. WELDS OF MITRES / REDUC.
1	2	3	4	5	6	7	8	9	10	11	12	13
II	a) ALL SERVICES COVERED UNDER INSPECTIONCLASS-1, BUT, EXCEEDING CATEGORY 'D' PR/T EMP LIMITATIO-NS. b) ALL SERVICES OTHER THAN COVERED UNDER INSPECTIONCLASS-1, BUT NON-TOXIX, NOT SUBJECTED TO SEVERE CYCLIC CONDITIO-NS. c) TOXIC, NON-LETHAL & FLAMMABLE d) FLAMMABLE/NON FLAMMABLE & TOXIC/NON-TOXIC; NOT SUBJECT TO SEVERE CYCLIC CONDITIO-NS	CARBON STEEL	1	-29 TO 427	150# TO 60#	**15HC, 30HC, 60HC**	a) VISUAL b) RADIOGRAPHY (NOTE 5,6) c) MP / LP (NOTE 4,6,10,11) d) HARDNESS	100% 5% --- NOTE-7	100% --- 5% NOTE-7	100% --- --- NOTE-7	100% --- 5% NOTE-7	100% 20% 20% NOTE-7
		LTCS		-45 TO 204		**15HLT, 30HLT, 60HLT**						

REMARKS FOR ABOVE TABLE:

i. MITRES & FABR1CATED REDUCERS ARE PERMITTED ONLY IF SPECIFIED IN PMS.

ii. NOTE- 7 FOR HARDNESS IS NOT VALID FOR P. NO. 8.

Copyright VCS Quality Services Private Limited – All rights reserved

Applicable Notes to Table-1

1. Branch welds shall consist of the welds between the pipe & reinforcing element (if any), nozzles & reinforcing element and the pipe & nozzle under the reinforcing element. Reinforcing element to be interpreted as pads, saddles, weldolets, sockolets etc.

2. Seal welds of threaded joints shall be given the same examination as socket welds.

3. Unless specifically stated, all materials shall be for "Non-IBR" service.

4. Magnetic Particle & the Liquid Penetrant method of examination shall be in accordance with Section V of the ASME Boiler and Pressure Vessel Code, Article VII and VI respectively. The entire area of the accessible finished weld surface shall be examined. Selected root runs, subject to a maximum of 10%, before finished weld, may also be examined, at the discretion of the engineer-in-charge.

   a) Wherever MP / LP testing is specified, either MP or LP test may be used. But wherever only MP test is specified, LP method of examination may be used only if MP examination is impracticable in the field as concurred by PMC/ Company site-in charge.

   b) "Random 5%" of Liquid Penetrant / Magnetic Particle test shall mean testing, by applicable test, one weld for each twenty welds or less made by the same welding procedure. "Random 10%" shall mean testing, by applicable test, one weld for each ten welds or less made by the same welding procedure. Similarly "Random 20%" shall mean testing, by applicable test, one weld for each five welds or less made by the same welding procedure.

   c) When Liquid Penetrant examination is specified, the surface shall be free of peened discontinuities.

   d) Inspection shall be performed in the welds excluding those for which radiography has been done.

   e) Girth weld, branch weld, attachment weld & socket weld of 3-1/2% Ni steel shall be Liquid Penetrant tested only when welded with austenitic material where MP test has been specified.

5. Radiography:

   a) "Random 5%, 10% or 20% radiography" shall mean examining not less than one from each 20 welds or less in case of "Random 5% radiography", 10 welds or less in case of "Random 10% radiography", one from each five welds or less in case of "Random 20% radiography" made by the same welding procedure. Irrespective of percentage, no. of welds to be radiographed shall be minimum 1. However first two welds made by each welder shall also be radiographed in case of "Random radiography". Welds selected for examination shall not include flange welds and shall be radiographed for their entire length. However, where it is impossible or impracticable to examine the entire weld length of field welds for either random or 100% radiography, and if the same impossibility is agreeable to site-in-charge, then a single 120 deg. exposure of the weld length may be given a Magnetic Particle test or Liquid Penetrant test.

Copyright VCS Quality Services Private Limited – All rights reserved

However in such cases for ferro-magnetic materials, only MP test shall be acceptable for classes higher than 600#.

b) In-process examination shall not be substituted for any required radiographic examination.

c) Number of radiography per one circumferential weld shall be as per ASME Sec.V Articles 2 and 22.

6. When radiography or other non-destructive inspection is specified, acceptance criteria for repairs or defects shall be as follows:

a) In case of 100% examination, any unacceptable weld shall be repaired and re inspected.

b) If required random examination reveals a defect requiring repair, then:

i. Two additional examinations of same type shall be made of the same kind of item (if welded joint, then by the same welding procedure or operator or both).

ii. If the group of items examined as required by b.1 above is acceptable, the items requiring repair shall be repaired or replaced and re-examined as required and all items represented by this additional examination shall be accepted.

iii. If any of the items examined as required by b.1 above reveals a defect requiring repair, two further comparable items shall be examined for each defective item found by examination.

iv. If all the items examined as required by b.3 are acceptable, the items requiring repair shall be repaired or replaced and re-examined as required, and all items represented by this further examination shall be accepted.

v. Number of times repair welding could be done for the same weld before acceptance shall be as follows:

Material	**No. of times repair welding is allowed**
C.S. up to 300#	3 or less
C.S. above 300#	2 or less
Killed steel	2 or less
Low alloy steel	2 or less
Austenitic S.S.	2 or less
3.5 Ni steel	2 or less
Al & Al base alloy	2 or less

Copyright VCS Quality Services Private Limited – All rights reserved

Cu & Cu base alloy	2 or less
Others	2 or less

vi. Welds not found acceptable for allowed number of times of repair as per b.5 above shall be replaced and re-examined.

vii. If any of the items examined as required by b.4 above reveals a defect requiring repair, all items represented by these examinations shall be either :

- Repaired or replaced and re-examined as required.
- Fully examined and repaired or replaced as necessary, and re-examined as necessary.

7. Hardness Test:

a) Hardness test shall be in accordance with ASTM specification E10. Hardness tests of the heat affected zone shall be made at a point as near as practicable to the edge of the weld. One test per weld shall be performed.

b) Hardness test where specifically called out in Table-1 of this specification or in PMS, shall be carried out irrespective of thickness and to the extent (%age) as mentioned therein.

c) All welds which are given heat treatment shall be hardness tested. Hardness test shall be performed after final heat treatment.

d) A minimum of 10% of welds, hot bends, and hot formed components in each furnace heat treated batch and 100% of those which are locally heat treated shall be hardness tested.

e) Hardness test requirement not covered in this specification shall be as per ASME B31.3.

f) The hardness limit applies to the weld and heat affected zone. Following hardness values shall be maintained:

Base Metal Group	**Maximum Hardness (BHN/RC)**
CS	238BHN/RC22
CS (NACE), Caustic, Amine, H2	200BHN
Cr Up to 2%	225BHN
Cr 2.25%-10%	241BHN
18/8 SS (NACE)	RC22

8. For IBR service lines, following IBR requirements shall apply in addition to the notes 4, 5, 6, 7, 12 and Table 1. In case of conflict between above notes and these requirements, the more stringent ones shall apply. IBR piping shall be erected of IBR inspector approved

Copyright VCS Quality Services Private Limited – All rights reserved

material and construction procedure. Erected piping shall be hydro tested, inspected and approved by IBR inspector.

a) Piping over 102 mm (4") bore:

10%of welds made by each welder on a pipeline with a minimum of two welds per welder, selected at random, shall be subjected to radiography.

b) Piping 102 mm (4") bore and under, but not less than 38 mm (1-1/2") bore:

Two percent of welds made by each welder on a pipeline with a minimum of one weld per welder, selected at random, shall be subjected to radiography or may be cut for visual examination and tests.

c) Piping less than 38 mm (1.5") bore:

Special tests are not normally required but 2% of welds by each welder on a pipe line may be cut out from the pipeline for the visual examination and bend tests.

d) Retests:

If any test specimen is unsatisfactory, two further weld specimens for retests shall be selected from the production welds and subjected to tests. In the event of failure of any retest specimens, the production welds carried out by this welder subsequent to the previous test shall be given special consideration.

9. For fabricated fittings LP test shall be done on the final pass of welding only, in addition to visual examination.

10. For mitres and fabricated reducers, LP / MP test shall be done on root pass in addition to radiography applicable to circumferential joint of respective piping class.

11. For branch connections, LP/MP test shall be done on root pass and final pass.

12. 10% of the butt weld joints shall be radiographed, however, 50% of these butt weld joints shall be field weld joints.

13. For lined specs, testing (MP/LP/Radiography etc.) shall be performed before lining.

Copyright VCS Quality Services Private Limited – All rights reserved

ENERGISING QUALITY

VCS QUALITY SERVICES PVT. LTD.

WELDING SPECIFICATION FOR FABRICATION OF PIPING

VPC-SS-PP-2509

00	28.01.2020	MB	AK	AD	SK
Rev. No	**Date**	**Prepared By**	**Checked By**	**Approved By**	**Authorized By**

UNCONTROLLED COPY	:	**If printed**
CONTROLLED COPY	:	**If in soft and signed**

Copyright VCS Quality Services Private Limited – All rights reserved

REVISION RECORD						
Rev.	**Revision Date**	**Prepared by**	**Checked by**	**Approved by**	**Authorized by**	**Revision Description**
00	28.01.2020					
		MB	AK	AD	SK	

Copyright VCS Quality Services Private Limited – All rights reserved

Abbreviations:

ASME	:	American Society of Mechanical Engineers
ASNT	:	American Society for Nondestructive Testing
AWS	:	American Welding Society
BPVC	:	Boiler & Pressure Vessel Code
CFH	:	Cubic Feet per Hour
DWDI	:	Double Wall Double Image
DWSI	:	Double Wall Single Image
GTA	:	Gas Tungsten Arc
GTAW	:	Gas Tungsten Arc Welding
IBR	:	Indian Boiler Regulations
IQI	:	Image Quality Indicator
NDT	:	Non Destructive Testing
PQR	:	Procedure Qualification Record
RT	:	Radiographic Testing
SMAW	:	Shielded Metal Arc Welding
SWSI	:	Single Wall Single Image
UTS	:	Ultimate Tensile Strength

Copyright VCS Quality Services Private Limited – All rights reserved

CONTENTS

1.0 GENERAL 4
2.0 APPLICABLE CODES & STANDARDS 4
3.0 BASE METAL 4
4.0 WELDING CONSUMABLES 5
5.0 SHIELDING & PURGING GAS 5
6.0 EQUIPMENTS & ACCESSORIES 6
7.0 WELDING PROCESS 6
8.0 EDGE PREPARATION 6
9.0 ALIGNMENT & SPACING 7
10.0 WEATHER CONDITIONS 7
11.0 WELDING TECHNIQUE 7
12.0 HEAT TREATMENT 8
13.0 CLEANING OF THE WELD JOINT 10
14.0 INSPECTION AND TESTING 10
15.0 REPAIRS OF WELDS 13
16.0 DOCUMENTS TO BE SUBMITTED BY CONTRACTOR (4 COPIES EACH) 14
FORMATS EXHIBIT A TO EXHIBIT H

Copyright VCS Quality Services Private Limited – All rights reserved

(This specification shall be used in conjunction with Welding Specification Charts).

1.0 GENERAL

This specification shall be followed for the fabrication of all types to welded joints of piping system within the battery limits of the plant.

The welded pipe joints shall include the following:

a) All pipe joints, longitudinal butt welds, circumferential butt welds and socket welds.

b) Attachments of forgings, flanges and other supports to pipes.

c) Welded manifold headers and other sub-assemblies.

d) Welded branch connections with or without reinforcing pads.

e) Joints in welded/fabricated piping components.

f) The attachments of smaller connections for vents drain drips and other instrument tapping's.

Any approval granted by the Engineer-in-Charge or Owner's inspector, shall not relieve the Contractor of his responsibilities and guarantee.

This specification shall not be applicable for welding of pipelines for transportation of liquid petroleum, gas and other similar products in onshore and off shore.

2.0 APPLICABLE CODES & STANDARDS

All welding work, equipment's for welding, heat treatment, other auxiliary functions and the welding personnel shall meet the requirements of the latest editions of the following accepted standards and procedures unless otherwise specified in the Welding Specification Chart and the Technical Notes attached thereof. In the case of conflicting requirements, the requirements mentioned in Welding Specification Chart/Technical Notes shall be applicable.

i. ASME Code for Pressure Piping - ASME B31.3

ii. ASME Boiler & Pressure Vessel Code, Sec II Part C, Material Specifications: Welding Rods, Electrodes and Filler metals.

iii. ASME Boiler & Pressure Vessel Code, Section V, Non-destructive examination.

iv. ASME Boiler & Pressure Vessel Code, Section VIII, Rules for Construction of Pressure Vessels.

v. ASME Boiler & Pressure Vessel Code, Section IX, Welding and Brazing Qualifications.

vi. The Indian Boiler Regulations - I.B.R.

In the event of any differences due to the additional requirements mentioned in this specification, over and above those obligatory as per codes, this specification shall be binding.

3.0 BASE METAL

3.1 In general, use of carbon steel, alloy steel and stainless steel is envisaged. The details of the material specifications are given in the Welding Specification Chart.

Copyright VCS Quality Services Private Limited – All rights reserved

3.2 The Contractor shall provide the manufacturer's test certificates for every heat of the materials supplied by him.

4.0 WELDING CONSUMABLES

4.1 The Contractor shall provide, at his own expense, all the welding consumables necessary for the execution of the job such as electrodes, filler wires, argon etc. and these should bear the approval of the Engineer-in-Charge.

4.2 The welding electrodes and filler wires supplied by the Contractor shall conform to the class specified in the Welding Specification Chart. The materials shall be of the make approved by the Engineer-in-Charge.

4.3 Electrode qualification test records should be submitted as per the Exhibit-A (attached) in respect of the electrodes tested by the Contractor, for obtaining the approval of the Engineer-in-Charge.

4.4 The Contractor shall submit batch test certificates, from the electrode manufacturers, giving details of physical and chemical tests carried out by them, for each batch of electrodes to be used.

4.5 All electrodes shall be purchased in sealed containers and stored properly to prevent deterioration. The electrodes removed from the containers shall be kept in holding ovens at temperatures recommended by the electrode manufacturer. "Out of the oven time" or electrodes, before they are consumed, shall not exceed the limits recommended by the electrode manufacturer. The electrodes shall be handled with care to avoid any damage to the flux covering.

4.6 All low hydrogen type of electrodes shall be rebaked at 350°C for 1 hour minimum and stored in ovens kept at 80-100°C before use. Recommendations of the electrode manufacturer shall be followed, if available.

4.7 The electrodes, filler wires and flux used shall be free from rust, oil, grease, earth and other foreign matter which affect the quality of welding.

4.8 Tungsten electrodes used shall conform to ASME Sec. II C SFA 5.12 specification. Thoriated Tungsten electrodes shall not be permitted due to possible radiation hazard. Instead, ceriated Tungsten Electrodes (EWCe-2 or equivalent) shall be used for GTA Welding.

5.0 SHIELDING & PURGING GAS

5.1 Argon gas used in GTA welding for shielding purposes shall be 99.995% pure. The purity of the gas shall be certified by the manufacturer. The rate of flow for shielding purposes shall be established through procedure qualification tests. Normally this rate may be 12-20 CFH.

5.2 Argon gas with a purity level of 99.995% shall be used for purging.

5.3 When GTAW process alone or a combination of GTAW and SMAW processes is recommended for the production of a particular joint, the purging shall be maintained during the root pass and for the first filling pass to minimize oxidation on the inner side of the pipe, unless otherwise specified in Welding Specification Chart.

5.4 Initial purging shall be maintained for sufficient period of time so that at least 4-5 times the volume between the dams is displaced, in order to completely remove the entrapped air. In no case should the initial purging period be less than 10 minutes. High gas pressure should be

Copyright VCS Quality Services Private Limited – All rights reserved

avoided.

5.5 After initial purging, the flow of the backing gas should be reduced to a point where only a slight positive pressure prevails. For systems, which have a small volume (up to 1/2 cubic foot) to be purged, a gas flow rate of 6-CFH is usually adequate. Systems of larger volume may require higher flow rates and these should be established during procedure qualification tests.

5.6 Gas backing (purging) is not required for socket type of welded joints.

5.7 Dams, used for conserving inert gas during purging, shall be removed after completion of the welding, and shall be accounted for. Wherever, removal of dams is not possible after welding, use of water-soluble dams should be made.

6.0 EQUIPMENTS & ACCESSORIES

6.1 The Contractor should have the arrangement of sufficient number of welding and cutting equipment's, auxiliaries, and accessories of sufficient capacities so as to meet the target/schedule.

6.2 All the equipment's for performing the heat treatment, including transformers, thermocouples, pyro-meters, automatic temperature recorders (with suitable calibration arrangement etc.) shall be provided by the Contractor at his own expenses and these should bear the approval of the Engineer-in-Charge.

6.3 Contractor shall make arrangements at his own expense, for providing the radiographic equipment's radiographic films, processing equipment all other darkroom facilities and all the equipment's/aterials required for carrying out the dye-penetrant/magnetic particle test/ultrasonic testing for satisfactory and timely completion of the job.

6.4 Redoing of any work, necessitated by faulty equipment's or operation used by the Contractor, will be done at his own expense.

7.0 WELDING PROCESS

7.1 Welding of various materials under this specification shall be carried out using one or more of the following processes with the approval of the Engineer-in-Charge.

- Shielded Metal Arc Welding Process (SMAW)
- Gas Tungsten Arc Welding Process (GTAW)

7.2 The welding processes to be employed are given in the Welding Specification Chart. Any deviation desired by the Contractor shall be obtained through the express consent of the Engineer-in-Charge.

7.3 Automatic and semi-automatic welding processes shall be employed only with the express approval of the Engineer-in-Charge. The welding procedure adopted and consumables used shall be specifically approved.

7.4 A combination of different welding processes could be employed for a particular joint only after duly qualifying the welding procedure to be adopted and obtaining the approval of Engineer-in-Charge.

8.0 EDGE PREPARATION

8.1 General

The edges to be welded shall be prepared to meet the joint design requirements by any of the

Copyright VCS Quality Services Private Limited – All rights reserved

following methods recommended:

a) Carbon Steel

Gas cutting, machining or grinding methods shall be used. After gas cutting, oxides shall be removed by chipping or grinding.

b) Low Alloy Steels (containing up to 5% Chromium).
Gas cutting, machining or grinding methods shall be used. After gas cutting, machining or grinding shall be carried out on the cut surface.

c) High alloy steel (> 5% Chromium) and stainless steels, nickel alloys:

Plasma cutting, machining or grinding methods shall be used. After plasma cutting, cut surfaces shall be machined or ground smooth.

8.2 Cleaning

a) The ends to be welded shall be properly cleaned to remove paint, oil, grease, rust, oxides, sand, earth and other foreign matter. The ends shall be completely dry before the welding commences.

b) On completion of each run, craters, welding irregularities, slag etc., shall be removed by grinding and chiseling. Wire brushes used for cleaning stainless steel joints shall have stainless steel wires and the grinding wheels used for grinding stainless steel shall be of a suitable type. Separate grinding wheels and wire brushes should be used for carbon steels and stainless steels.

9.0 ALIGNMENT & SPACING

9.1 Components to be welded shall be aligned and spaced as per the requirements laid down in applicable code. Special care must be taken to ensure proper fitting and alignment when the welding is performed by GTAW process. Flame heating for adjustment and correction of ends is not permitted unless specifically approved by the Engineer-in-Charge.

9.2 A wire spacer of suitable diameter may be used for maintaining the weld root opening while tacking, but it must be removed after tack welding and before laying the root bead.

9.3 For pipes of wall thickness 5 mm and above, the ends to be welded shall be secured in position with the aid of couplers, yokes and 'C' clamps, to maintain perfect alignment. Yokes shall be detached after the completion of weld, without causing any surface irregularity. Any irregularity caused on the pipe surface must be suitably repaired to the satisfaction of the Engineer-in-Charge.

9.4 Tack welds, for maintaining the alignment, of pipe joints shall be made only by qualified welders using approved WPS. Since the tack welds become part of the final weldment they shall be executed carefully and shall be free from defects. Defective tack welds must be removed prior to the actual welding of the joints.

9.5 Tacks should be equally spaced. Minimum number of tacks shall be:

3 tacks	-	for 2"and smaller dia. pipes
4 tacks	-	for 3" to 12" dia. pipes
6 tacks	-	for 14" and larger dia. pipes

9.6 Welding shall commence only after approval of fit-up by the Engineer-In-Charge.

Copyright VCS Quality Services Private Limited – All rights reserved

10.0 WEATHER CONDITIONS

10.1 The parts being welded and the welding personnel should be adequately protected from rain and strong winds. In the absence of such a protection no welding shall be carried out.

10.2 During field welding using GTAW process, particular care shall be exercised to prevent any air current affecting the welding process.

11.0 WELDING TECHNIQUE

11.1 Root Pass

a) Root pass shall be made with electrodes/filler wires recommended in the welding specification chart. For fillet welding, root welding shall be done with consumables recommended for filler passes. The preferred size of the electrodes is 2.5 mm diameter (12 SWG) but in any case not greater than 3.25 mm (10 SWG).

b) Upward technique shall be adopted for welding pipe held fixed with its axis horizontal.

c) The root pass of butt joints should be executed so as to achieve full penetration with complete fusion of the root edges. Weld projection inside the pipe shall be as per applicable code. It shall be limited 3mm map. When the applicable code does not place any restriction.

d) Any deviation desired from the recommended welding technique and electrodes indicated in the welding specification chart should be adopted only after obtaining express approval of the Engineer-in-Charge.

e) Welding shall be uninterrupted.

f) While the welding is in progress care should be taken to avoid any kind of movement of the components, shocks, vibrations and stresses to prevent occurrence of weld cracks.

g) Peening shall not be used.

11.2 Joint Completion

a) Joint shall be completed using the class of electrodes, recommended in the Welding Specification Chart. Size of the electrode shall not exceed 4 mm in diameter for stainless steels and alloy steels used for low temperature applications.

b) Two weld beads shall not be started at the same point in different layers.

c) Butt joints shall be completed with a cover layer that would affect good fusion at the joint edges and a gradual notch free surface.

d) Each weld joint shall have a workmanship like finish. Weld identification work shall be stamped clearly at each joint, just adjacent to the weld. Metal stamping shall not be used on thin pipe having wall thickness less than 3.5mm. Suitable paint shall be used on thin wall pipes for identification.

e) Rust preventive/protective painting shall be done after the weld joint has been approved.

11.3 Dissimilar Welds

Where welds are to be produced between carbon steels and alloy steels preheat and post weld heat treatment requirements shall be those specified for corresponding alloy steels and filler

Copyright VCS Quality Services Private Limited – All rights reserved

wire/electrodes shall correspond to ER 70 S-G or AWS E-7016/7018 type. For welds between two dissimilar Cr-Mo low alloy steels, preheat and post weld heat treatments shall be those specified for higher alloy steel and electrodes used shall correspond to those specified for steel of lower alloy content. For carbon steel or alloy steel to stainless welds, use of filler wire/electrodes EIER-309/E-310/E NiCr Fe-3 shall be made. The welding procedure, electrodes/filler wires to be used shall be approved by the Engineer-in-Charge.

12.0 HEAT TREATMENT

12.1 Preheating

a) No welding shall be performed without preheating the joint to 10°C (50°F) when the ambient temperature is below 10 degree.

b) Preheating requirements for the various materials shall be as per the Welding Specification Chart attached.

c) Preheating shall be performed using resistance or induction heating methods. Preheating by gas burners, utilizing oxy-acetylene or oxy-propane gas mixtures, with neutral flame may also be carried when permitted by the Engineer-in-Charge.

d) Preheating shall extend uniformly to at least three times the thickness of the joint, but not less than 50 mm, on both sides of the weld.

e) Preheating temperature shall be maintained over the whole length of the joint during welding. Temperature recorders shall be provided by the Contractor to record the temperature.

12.2 Post Heating

In case of alloy steel materials such as Cr-Mo steels, if the post weld heat treatment is not performed immediately after welding, the weld joint and adjacent portion of pipe, at least 50 mm on either side of weld, shall be uniformly heated to 300°C. This temperature shall be maintained for half an hour minimum, and then wrapped with mineral wool before allowing it to cool to room temperature. If the Post Heating temperature specified in the Welding Specification Charts exceeds 300°C, the same shall be followed. Similarly, if the welding specification chart specifies post-heat time, the same shall be applicable. Post weld heat treatment as specified in the Welding Specification Chart shall be carried out later on.

12.3 Post Weld Heat Treatment (PWHT)

a) Post weld heat treatment, wherever required for joints between pipes, pipes and fittings, pipe body and supports shall be carried out as per the welding specification chart, applicable codes standards and the instructions of the Engineer-in-Charge. In this regard procedure qualification to be done before carrying out PWHT in production welds.

b) The Contractor shall submit for the approval of the Engineer-in-Charge, well before carrying out actual heat treatment, the details of the post weld heat treatment procedure as per Exhibit B attached, that he proposes to adopt for each of the materials/assembly/part involved.

c) Post weld heat treatment shall be done in a furnace or by using an electric resistance or induction-heating equipment, as decided by the Engineer-in-Charge.

d) While carrying out local post weld heat treatment, technique of application of heat must ensure uniform temperature attainment at all points of the portion being heat- treated. Care shall be taken to ensure that width of heated band over which specified post weld

Copyright VCS Quality Services Private Limited – All rights reserved

heat treatment temperature attained is at least that specified in the relevant applicable standards/codes. Control of temperature shall be done using microprocessor/computer controlled system. The desired time-temperature cycle shall be entered into the microprocessor/computer.

e) Throughout the cycle of heat treatment, the portion outside the heated. band shall be suitably wrapped under insulation so as to avoid any harmful temperature gradient at the exposed surface of pipe. For this purpose temperature at the exposed surface should not be allowed to exceed 50% of the peak temperature.

f) The temperature attained by the portion under heat treatment shall be recorded by means of thermocouple pyrometers. Adequate number of thermocouples should be attached to the pipe directly at equally spaced location along the periphery of the pipe joint. The minimum number of thermocouples attached per joint shall be 1 up to 6" dia., 2 up to 10" dia. and 3 for 12" dia. and above. However, the Engineer-in-Charge can increase the required number of thermocouples to be attached if found necessary.

g) Automatic temperature recorders, which have been suitably calibrated, shall be employed for measuring & recording temperature. Both, the actual time-temperature graph and the designed time temperature graph shall be available on every chart. The time-temp graph shall be submitted to Engineer-in-Charge immediately on completion of Stress Relieving Cycle the calibration record of each recorder should be submitted to the Engineer-in-Charge prior to starting the heat treatment operations and his approval should be obtained.

h) Manufacturer's test certificate shall be submitted for the thermocouples materials and record shall be maintained by the Contractor.

i) Immediately on completion of the Heat Treatment, the Post Weld Heat Treatment charts/records along with the hardness test results on the weld points, wherever required as per the Welding Specification Chart, shall be submitted to Engineer-in- Charge for his approval.

j) Each weld joint shall bear a unique identification number, which shall be maintained in the piping sketch to be prepared by the Contractor. The weld joint identification number should appear on the corresponding post weld heat treatment charts. The chart containing the identification numbers and piping sketch shall be submitted to the Engineer-in-Charge in suitable folders.

13.0 CLEANING OF THE WELD JOINT

All weld joints shall be free from adherent weld spatters slag, sward, dirt or foreign matter. This can be achieved by brushing. For stainless steels, brushes with only stainless steel bristles shall be used.

14.0 INSPECTION AND TESTING

14.1 General

a) The Owner's inspector shall have free access to all concerned areas, where the actual work is being performed. The contractor shall also accord the Owner's Inspector all means and facilities necessary to carry out inspection.

b) The Owner is entitled to depute his own inspector to the shop or field where prefabrication and erection of pipe lines is in progress for (but not limited to) the following objectives:

Copyright VCS Quality Services Private Limited – All rights reserved

i. To check the conformance to relevant standards and suitability of various welding equipment's and the welding performance.

ii. To witness the welding procedure qualification.

iii. To witness the welder performance qualification.

iv. To check whether shop/field welding being executed is in conformity with the relevant specifications and codes of practice followed in piping construction.

c) Contractor shall intimate sufficiently in advance the commencement of qualification tests, welding works and acceptance tests, to enable the Owner's inspector to be present to supervise them, as decided by the Engineer-In-Charge.

14.2 Welding Procedure Qualification

Welding procedure qualification shall be carried out in accordance with the applicable requirements of ASME Sec. IX latest edition and/or other applicable codes and the job requirements. The contractor shall submit the welding procedure specification in format as per Exhibit-C (attached) immediately after the receipt of the order. Owner's inspector will review, check and approve the welding procedure submitted and shall release the procedure for qualification tests. The procedure qualification test shall be carried out by the Contractor at his own expense. A complete set of test results in the format as per Exhibit-D attached) shall be submitted to the Owner's inspector for his approval immediately after completing the procedure qualification test and at least 2 weeks before the commencement of actual work. Standard test as specified in the code shall be carried out in all cases. In addition to these tests, other tests like macro/micro examination, hardness tests, dye penetrant examination, charpy V-notch, Corrosion tests, impact tests etc. shall be carried out on specimens depending upon the type of base material, operating conditions and requirements laid down in the detailed drawings and specifications. It shall be the responsibility of the Contractor to carry out all the tests required to the satisfaction of the Owner's inspector.

14.3 Welder's Qualification

a) Welders shall be qualified in accordance with the ASME Section-IX or other applicable codes. The Owners inspector reserves the right to witness the test and certify/approve the qualification of each welder separately. Only those welders who have been approved by the Owner's Inspector shall be employed for welding. Contractor shall submit the welder qualification test reports in the format as per Exhibit-E (attached) and obtain express approval before commencement of work. It shall be the responsibility of Contractor to carry out qualification tests of welders. For welding of the steam piping, falling under the purview of Indian Boiler Regulations, only those welders with IBR Certification, qualified by Boiler Inspectorate, and acceptable to the local Boiler Inspector authority shall be employed.

b) The welders shall always have in their possession; an identification card containing information contained in Exhibit-G and shall produce it on demand by the Engineer-In-Charge or his representative. It shall be the responsibility of the Contractor to issue the identify cards after it has been duly certified by the, owner's Inspector.

c) No welder shall be permitted to work without the possession of the identify card.

d) If a welder is found to perform a type of welding or in a position for which he is not

Copyright VCS Quality Services Private Limited – All rights reserved

qualified, he shall be debarred from doing any further work. All welds performed by an unqualified welder shall be cut and redone by a qualified welder at the expense of the Contractor.

14.4 Visual Examination

Visual Examination of all welds shall be carried out as per the latest editions of the applicable codes and specifications. All finished welds shall be visually inspected for parallel and axial alignment of the work, excessive reinforcement, concavity of welds, shrinkage cracks, inadequate penetration, unrepaired burn-through, under cuts, dimensions of the weld, surface porosity and other surface defects. Undercutting adjacent to the completed weld shall not exceed the limits specified in the applicable standard/code.

14.5 Radiographic Examination

a) Contractor shall appoint agency for carrying out the radiography works at site from the list of agency enclosed in the bid document or separately supplied by owner/ VCS.

b) The Radiographic Examination procedures to be adopted shall be submitted by the contractor as per Exhibit-F and shall be got approved from the Owner's Inspector prior to employment. A person qualified to ASNT Level-II or ASNT Level-III in Radiographic testing shall prepare the procedure. The Radiography Procedure shall be established to demonstrate that the required sensitivity can be consistently achieved under the most unfavorable parameters (e.g. source to film distance, geometric unsharpness, thickness etc.). The radiographic technique and procedure adopted shall conform of the requirements mentioned in Article 2 as well as Article 22 of ASME Sec. V. The IQI sensitivity obtained shall be equal to or better than the requirements mentioned in Article 2 of ASME Sec. V. Source side penetrameter shall be used in establishing radiographic procedure/ technique. The acceptance criteria shall be as per the relevant codes of Fabrication and overriding requirements if mentioned elsewhere in the technical specifications of the contract. The Contractor shall be responsible for carrying out Radiography; rectification of defects and re-radiography of welds repaired/rectified at his cost.

c) The extent of Radiography shall be as per specifications to be supplied to the Contractor. For welds between dissimilar materials, the extent of Radiographic Examination shall be the more stringent of the two recommended for the materials being welded. Wherever random Radiography is called for, in a particular piping class, the dissimilar materials weld joints shall essentially be included.

d) Type of Radiation source and film to be used shall be as per Exhibit-H for carrying out radiographic examination. However if specifications (as given elsewhere in the contract) for some critical material require usage of X-Radiation, then Radiography shall be done using X-Rays only.

e) The Contractor shall fulfill all the statutory and owner's safety requirements while handling X-ray and Gamma-ray equipment’s.

f) In case of random radiography, the joints for Radiography shall be selected by the Owner's Inspector and the Radiography shall be performed in his presence, if he instructs the contractor to do so. The contractor shall furnish all the radiographs, to the Owner's Inspector immediately after processing along with evaluation by a person qualified to ASNT

Copyright VCS Quality Services Private Limited – All rights reserved

Level-II in Radiographic testing, in line with Article 2 of ASME Sec. V. The certificate of ASNT/ISNT Level II qualification of the NDT personnel shall be submitted to owner's inspector for his approval prior to start of job.

g) The Contractor shall provide the Owner's Inspector, all the necessary facilities at site such as a dark room with controlled temperature, illuminator (viewer) suitable for varying densities, a duly calibrated electronic densitometer with batteries, magnifying glass, tracing papers, ruler, marking pencils etc. to enable him to review the radiographs.

h) Where random radiography is specified, the first weld of each welder shall be completely radiographed. In the case of pipe of size 6" and below, the first two welds shall be completely radiographed.

i) For each weld performed by a welder found unacceptable, two additional checks shall be carried out on welds performed by the same welder. This operation is iterative and the of two additional welds for each weld deemed unsatisfactory shall be continued till such time that two consecutive welds of satisfactory quality are found for every defective weld.

j) The Contractor shall carry out these additional radiographic testing at his own expense. To avoid the possibility of too many defective welds by a single welder remaining undetected for a long period to time, the Contractor shall promptly arrange for Radiographic Examination so that there is no accumulation of defective joints.

k) Contractor shall quote rates for X-ray as well as Gamma Ray for joints indicated to be radiographed by X-ray in Table of Exhibit-H.

14.5.1 Check shots

a) Owner / Engineer - in - charge or his representative shall select 5% of the total joints radiographed on a day for check shots. Contractor shall carry out check shots as directed.

b) Weld profiles of check shots shall be compared with weld profile observed in the earlier Radiographs. In the event of anyone variation in the check shots and earlier Radiographs, contractor shall re-shoot the entire lot of joints radiographed by particular Radiography agency on the particular date. All the re-shot films shall be compared with the originally submitted films.

14.6 Liquid Penetrant and Magnetic Particle Examination

a) Whenever such tests are specified, the tests shall be carried out on joints chosen by the Owner's inspector, as per ASME Section V article 6 and 7 respectively. The tests are to be performed by a person possessing a valid ASNT/ISNT Level-II qualification in the method being used.

b) For austenitic stainless steels and other nonmagnetic materials, liquid (dye) penetrant test shall be carried out. For carrying out this test, the materials shall be brought within a temperature limit of 15°to 50°C.

14.7 Hardness Test

Hardness requirements for welds shall be as per the Welding Specification Chart Non Destructive Examination Specification attached elsewhere in the contract. Hardness testing shall be carried out by Vickers Hardness Tester during welding procedure qualification and shall be cross sectional. For production welds, hardness testing shall be carried out by portable

Copyright VCS Quality Services Private Limited – All rights reserved

digital hardness testers. Poldi hardness tester shall not be permitted. Contractor shall produce documentary evidence/calibration certificate to the Owner's Inspector and obtain approval of the hardness testing equipment.

14.8 Proof Tests

Hydrostatic and pneumatic tests shall be performed as per the requirements laid down by respective flushing and Testing specification/applicable codes to demonstrate the soundness of the welds. The tests shall be conducted after fulfilling the requirement of visual examinations radiography etc. and after the entire work has been certified by the Owner's inspector to be fit for being subjected to such tests.

15.0 REPAIRS OF WELDS

a) Defects ascertained, through the inspection methods, which are beyond acceptable limits shall be removed after the joint is completely radiographed by the process of chipping and grinding.

b) When the entire joint is judged unacceptable, the welding shall be completely cut and edges suitably prepared as per required alignment tolerances. The re-welded joint shall again be examined following standard practices.

c) No repair shall be carried out without prior permission of the Owner's inspector.

d) Repairs and/or work of defective welds shall be done in time to avoid difficulties in meeting the construction schedules.

16.0 DOCUMENTS TO BE SUBMITTED BY CONTRACTOR (4 COPIES EACH)

a) Electrode and Welding Consumable Qualification Records as per Exhibit-A, for the Welding Consumables tested and approved for the work.

b) Batch Test Certificates, for the Electrodes used, obtained from the Electrode Manufacturers.

c) Proposed Heat Treatment Procedure as per Exhibit-B

d) Heat Treatment Charts.

e) Weld joint hardness test results.

f) Welding Procedure Specifications as per Exhibit-C immediately after receipt of the order.

g) Welding Procedure Qualification records as per Exhibit-D.

h) Welder Performance Qualification records as per Exhibit-E immediately after conducting Welder Qualification Tests.

i) Radiography Procedure as per Exhibit-F and other NDT procedures.

j) Radiographic test Report along with Radiographs and other NDT reports.

k) Piping Sketch (Isometric) giving all the details regarding the pipe specifications, welded joints, joints radiographed magnetic particle, tested, ultrasonic tested, penetrant tested, joints heat treated, WPS used, welders identification number, etc.

Copyright VCS Quality Services Private Limited – All rights reserved

EXHIBIT -A

Sheet 1 of3

ELECTRODE QUALIFICATION TEST RECORD

A) Tested at (Site name) : Date:

Manufacturer's Name :

Brand Name :

Batch Number & Size tested :

Classification & Code :

Intended for welding in position :

In combination with (if any) :

Code of Reference (used for testing) :

Special Requirements (if any) :

B) All-weld Tensile Test :

Base Material used :

Pre-heat temperature :

Post welds heat treatment details :

Visual examination :

Radiographic examination results :

Tensile test results :

Identification No.	U.T.S.	Yield Point	Elongation	Remarks
1.				
2.				

Copyright VCS Quality Services Private Limited – All rights reserved

EXHIBIT-A

Sheet 2 of 3

C) Impact Test Results

Test Temperature : Notch in :

Type of Specimens (Charpy) : Size of Specimens :

Specimen No.	Impact Value	Average
1.		
2.		
3.		
4.		
5.		

D) Chemical Analysis Results

Electrode Size Result :

Batch No. :

%C	%S	%P	%Si	%Mn	%Cr	%Ni	%Mn	Other

E) Fillet Weld Test Results :

Welding Positions :

Base Materials :

Size of electrode used :

Visual Inspection Results :

1)

2)

3)

Copyright VCS Quality Services Private Limited – All rights reserved

EXHIBIT-A

Sheet 3 of3

Macro Test Results :

Fracture Test Results :

Remarks :

F) Other Test Results

1. Transverse tensile test :

In combination with :

Base material used :

Position of welding :

Preheat temperature :

Post weld heat treatment :

Radiography :

Identification No. U.T.S Fracture in Remarks

2. Guided Bend Test :

Position	Identification No.	Root, Face or Side Bend	Remarks
	1.		
	2.		
	3.		
	4.		
	5.		

G) Any other tests :

H) Conclusions :

.....	.....	.....
PREPARED BY (CONTRACTOR)	REVIEWD (CONTRACTOR)	APPROVED BY (VCS/OWNER)

Copyright VCS Quality Services Private Limited – All rights reserved

EXHIBIT-B

Sheet 1 of 1

STRESS RELIEF HEAT TREATMENT PROCEDURE SPECIFICATION

Contractor : _____

Name of the Heat treater : _____

Name of the Project : _____ Specification Reference No. _____

1. General Details_____ Other Details

Name of the Equipment: _____

Type of Heating: Elec. Res. / Induction

(Tick mark applicable method) Maximum Permissible Temp at Uncovered Parent Metal _____

Width of heated band _____

Width of Insulation _____

2. Material:_____

No.of Thermocouples (Dia wise) _____

Type of Thermo couples _____

3. Heat Treatment Cycle Details

Charging temp °C _____

Rate of heating ° C /Hr. _____

Soaking Temperature, °C _____

Soaking Time, Hrs. _____

Rate of Cooling 0 C/Hr. _____

Method of Cooling _____

4. Other details, if any _____

Copyright VCS Quality Services Private Limited – All rights reserved

EXHIBIT -C
SHEET 1 OF 3

FORMAT FOR WELDING PROCEDURE SPECIFICATION (WPS)

Company Name _____ by _____

Welding Procedure Specification No._____ Date _____

Welding Process (es) _____ Type (s) _____

(Automatic, Manual, Machines or Semi Auto)

JOINTS

Joint Design _____

Backing (Yes) _____ (No) _____

Backing Material (Type) _____

Sketches Production Drawings. Weld Symbols Written

Description should show the general arrangement of the parts to be welded. Where applicable, the root spacing and the details of weld groove may be specified.

(At the option of the Manufacturer sketches may be attached to illustrate joint design weld layers and bead sequence e.g. for notch toughness procedures, for multiple process procedures, etc.)

BASE METALS

P.No. _____Group No. _____ to P. No. _____ Group No. _____

OR

Specification type and grade _____

to Specification type and grade _____

OR

Chem. Analysis and Mech. Prop. _____

to Chem. Analysis and Mech. Prop._____

Thickness Range:

Base Metal: Groove _____ Fillet _____

Deposited Weld Metal: Groove _____ Fillet_____

Pipe Dia Range: Groove: _____ Fillet _____

Other _____

Copyright VCS Quality Services Private Limited – All rights reserved

EXHIBIT –C
SHEET 2 OF 3

FILLER METALS

F.No. _____ Other _____

A.No. _____ Other _____

Spec. No. (SFA) _____

AWS No.(Class) _____

Size of filler metals _____

(Electrodes, Cold Wire, Hot Wire etc.)

Electrode-Flux (Class) _____

Flux Trade Name _____

Consumable Inset _____

Each base metal/filler metal combination should be recorded individually.

WPSNO _____ Rev._____

POSITIONS:	**POSTWELDED HEAT TREATMENT**
Position(s) of Groove _____ Welding Progression: UP _____ Down _____ Positions of fillet _____	Temperature Range _____ Time Range _____
PREHEAT Preheat Temp. Mon. _____ Interpass Temp. Max. _____ Preheat Maintenance_____	**GAS** Shielding Gas (es) _____ Percent Composition (mixtures) _____ _____ Flow Rate _____ Gas Backing _____ Trailing Shielding Gas Composition _____

ELECTRICAL CHARACTERISTICS

Current AC or DC _____ Polarity_____

Amps (Range) _____ Volts (Range) _____

(Amps and volts range should be recorded for each electrode size, position, and thickness, etc. This information may be listed in a tabular form similar to that shown below).

Tungsten Electrode Size and Type _____

(Pure Tungsten, 2% Ceriated, etc.)

Mode of Metal Transfer for GMA W _____

(Spray arc, short circuiting arc, etc.)

Electrode Wire feed speed range _____

Copyright VCS Quality Services Private Limited – All rights reserved

EXHIBIT-C
SHEET 3 OF 3

TECHNIQUE

String or Weave Bead _____

Orifice or Gas Cup Size _____

Initial and Interpass Cleaning (Brushing, Grinding, etc.)_____

Method of Back Gouging _____

Oscillation _____

Contact Tube to Work Distance _____

Multiple or Single Pass (per side) _____

Multiple or Single Electrodes _____

Travel Speed (Range) _____

Peening _____

Other _____

Weld Layer(s)	Process	Filler metal		Current		Volt Range	Travel Speed Range	Other
		Class.	Dia.	Type polarity	Amp. Range			
								e.g. Remarks, Comments, Hot wire Addition, Technique Torch Angle, etc.

Copyright VCS Quality Services Private Limited – All rights reserved

EXHIBIT-D
SHEET 1 OF 2

FORMAT FOR PROCEDURE QUALIFICATION RECORD (PQR)

RECORD ACTUAL CONDITIONS USED TO WELD TEST COUPON

Company Name _____

Procedure Qualification Record No. _____ Date _____

WPS No. _____

Welding Process (es) _____

Types (Manual, Automatic, Semi-Auto) _____

JOINTS

Groove Design of Test Coupon

(For combination qualification the deposited weld metal thickness shall be recorded for each Filler metal or process weld)

BASE METALS Material Spec. _____ Type of Grade _____ P.No. _____ to P.No. _____ Thickness of Test Coupon _____ Diameter of Test Coupon _____ Other _____	**POSTWELD HEAT TREATMENT** Temperature _____ Time _____ Other _____
FILLER METALS Weld Metal Analysis A No _____ Size of Filler Metal _____ Filler Metal E.No. _____ SFA Specification _____ AWS Classification _____ Other _____	**GAS** Type of Gas on Gases _____ Composition of Gas Mixture _____ Other _____
POSITION Position of Groove _____ Weld Progression (Uphill, Downhill)_____ Other _____	**ELECTRICAL CHARACTERISTICS** Current _____ Polarity _____ Amps _____ Tungsten Electrode Size _____ Other _____

Copyright VCS Quality Services Private Limited – All rights reserved

PREHEAT	TECHNIQUE
Preheat Temp. _____ Inter pass Temp. _____	Travel Speed _____ String or Weave Bead _____ Oscillation _____ Multi pass or Single Pass (per side) _____ Single or Multiple Electrodes _____ Other _____

Copyright VCS Quality Services Private Limited – All rights reserved

EXHIBIT-D

SHEET 2 0F 2

GUIDED BEND TESTS

Type of Figure No	Result

TOUGHNESS TESTS

Specimen No.	Notch Location	Notch Type	Test Temp.	Impact Value	Lateral Exp.		Drop Weight	
					% Shear	Mils	Break	No Break

FILLET WELD TEST

Result – Satisfactory: Yes ____ No _____ Penetration into Parent Metal: Yes ____ No _____

Macro – Results _____

OTHER TESTS

Type of Test _____

Deposit Analysis _____

Other _____

_____

Welder's Name _____ Clock No. _____ Stamp No. _____

Test Conducted by _____ Laboratory Test No. _____

We certified that the statements in this record are correct and test welds were prepared, welded and tested in accordance with the requirements of Section IX of the ASME Code.

Date _____ Manufacturer _____

By _____

(Detail of record of tests are illustrative only and may be molded to conform to the type and number of tests required by codes and specifications).

Copyright VCS Quality Services Private Limited – All rights reserved

EXHIBIT-E

SHEET 1 OF 2

FORMAT FOR MANUFACTURER'S RECORD FOR WELDER OR WELDING OPERA TOR QUALIFICATION TESTS

Welder Name _____ Check No. _____ Stamp No. _____

Using WPS No. _____ Rev._____

The above welder is qualified for the following ranges

Variable	Record Actual Values Used in Qualification	Qualification Range
Process	_____	_____
Process Type	_____	_____
Backing (metal, Weld metal, flux, etc.,)	_____	_____
Material Spec.	_____ to _____	_____ to _____
Thickness		
Groove	_____	_____
Filler	_____	_____
Diameter		
Groove	_____	_____
Filler	_____	_____
Filler Metal		
Spec. No.	_____	_____
Class	_____	_____
F. No.	_____	_____
Position	_____	_____
Weld Progression	_____	_____
Gas Type	_____	
Electrical Characteristics		_____
Current	_____	_____
Polarity	_____	

Copyright VCS Quality Services Private Limited – All rights reserved

EXHIBIT-E

SHEET 2 OF 2

Guided Bend Test Results

Type and Fig.No.	Result

Radiographic Test Results
For alternative qualification of groove welds by radiography

Radiographic Results_____

Fillet Weld Test Results

Fracture Test (Describe the location, nature and size of any crack of tearing of the specimen____
Length and Per Cent of Defects _____ inches _____%
Macro Test – Fusion_____
Appearance - Fillet Size (ing) _____ x _____ Convexity or Concavity _____

_____

Test Conducted by _____ Laboratory - Test No. _____

We certify that the statements in this record are correct and that the test welds were prepared. Welded and tested in accordance with the requirements of Section IX of the ASME Code.

Date _____ Organization _____

By _____

(Details of record tests are illustrative only and may be modified to conformation to the type & number of tests required by the Code).

Note: Any essential variables in addition to those above shall be recorded

Copyright VCS Quality Services Private Limited – All rights reserved

EXHIBIT – F

RADIOGRAPHIC PROCEDURE QUALIFICATION RECORD FOR PIPE WELDING

1. Location
2. Date of Testing
3. Name of the Contractor/Agency
4. Material: Carbon steel/Alloy Steel/Stainless
4. Technique: DWSIISWSI/DWDI
5. Diameter & Thickness
6. Type of Weld Joint
7. Radiation Source
8. Intensifying Screens/Lead Screens
9. Geometric Relationship:
10. Limit of Film Coverage:
11. Film Type and Make:
12. Exposure Time:
13. Processing:
14. Density:
15. Sensitivity:

16.* Type of penetrameter:
(Source side)

17.* Type of penetrameter:
(Film side)

Signature of Contractor/Agency with Seal

Approval of VCS's Inspector

- Ref. Para regarding recommended practice on placement of penetrameters Article 22, SE 142, ASME Sec. V.
- For "Random Radiography" lines placement of penetrameters as per Article 2, ASME, Sec. V is permitted.

Copyright VCS Quality Services Private Limited – All rights reserved

EXHIBIT - G

WELDER'S IDENTIFICATION CARD

Photograph

1. Name
2. Identification
3. Date of Testing
4. Process
5. Thickness Range
6. Diameter Range
7. F. No.
8. Date of approval of welding
9. Position(s)

Approved by:

Employer's Signature with Seal

Copyright VCS Quality Services Private Limited – All rights reserved

EXHIBIT - H

Type of Source and Films to be used for RADIOGRAPHY

NOMINAL WALL THICKNESS(T) IN mm		SHOP WELDED JOINTS		IN-SITU WELDS	
		SOURCE	FILM : CEN Class	SOURCE	FILM : CEN Class
T≥19	All Materials	Gamma Ray	C5	Gamma ray	C5
8≤T<19	Carbon steel	Gamma ray	C4	Gamma ray	C4
<8	All other materials	Gamma ray	C3	Gamma ray	C3
	Carbon Steel Other than Inspection Class IV *	Gamma ray	C3	Gamma ray	C3/C1
	All Other Materials and Carbon Steel of Inspection Class IV *	X-Ray	C4	X-ray with C4 or Equivalent to be used. Gamma Ray (Se 75 Source only) with C3/C2 Equivalent may be allowed only if in the assessment of owner's inspector, Joints are in accessible for X-ray equipment and radiographic sensitivity is achieved.	

Note: Integral to above table

1) Films slower than the above may have to be used, if required radiographic sensitivity is not achieved consistently.

COMPARISION OF FILM FROM DIFFERENT MANUFACTURERS.

CEN Classification	KODAK	AGFA	FUJI
---	CX	D8	---
C5	AA400	D7	IX100
C4	T200	D5	IX80
C3	MX125	D4	IX50
C2	M100	D3	---
C1	DR50	D2	IX25
---	SR**	---	---

***Special films, extremely fine grain & very high resolution*

Copyright VCS Quality Services Private Limited – All rights reserved

ENERGISING QUALITY

VCS QUALITY SERVICES PVT. LTD.

TECHINCAL NOTES FOR BOLTS AND NUTS

VPC-SS-PP-2510

00	**28.01.2020**	**MB**	**AK**	**AD**	**SK**
Rev. No	**Date**	**Prepared By**	**Checked By**	**Approved By**	**Authorized By**

UNCONTROLLED COPY	:	**If printed**
CONTROLLED COPY	:	**If in soft and signed**

Copyright VCS Quality Services Private Limited – All rights reserved

REVISION RECORD						
Rev.	**Revision Date**	**Prepared by**	**Checked by**	**Approved by**	**Authorized by**	**Revision Description**
00	28.01.2020					
		MB	AK	AD	SK	

Copyright VCS Quality Services Private Limited – All rights reserved

Abbreviations:

ASME	The American Society of Mechanical Engineers
ASTM	The American Society for Testing and Materials
MR	Material Requisition
SS	Stainless Steel

Copyright VCS Quality Services Private Limited – All rights reserved

CONTENTS

1.0 GENERAL 5

2.0 ACCEPTABLE DEVIATIONS 6

Copyright VCS Quality Services Private Limited – All rights reserved

1.0 GENERAL

1.1 The process of manufacture, heat treatment, chemical & mechanical requirements and marking for all stud bolts, m/c bolts, jack screws & nuts shall be in accordance with the codes/standards and specifications given in the requisition. The applicable identification symbol in accordance with the material specification shall be stamped on each bolt and nut. Supplier shall strictly comply with MR/ PR stipulations and no deviation shall be permitted.

1.2 Testing

1.2.1. Test reports shall be supplied for all mandatory tests as per the relevant material specifications.

1.2.2. Material test certificate shall also be furnished. (Heat Analysis, Product Analysis and Mechanical Requirement)

1.2.3. Stress Rupture Test as detailed in ASTM A453 shall be carried out for all ASTM A453 bolting material irrespective of the temperature.

1.2.4. Refer Specification no VCS-PL-ITP-0012 for 'Inspection & Test Plan for Bolting Material'.

1.3 All bolting shall be as per ASME B 18.2.1 for studs, M/c bolts and jackscrews and ASME B 18.2.2 for nuts.

1.4 Threads shall be unified (UNC for up to 1" dia and 8UN for> 1" dia) as per ASME B1.1 with class 2A fit for studs, M/c bolts and jackscrews and class 2B fit for nuts.

1.5 Stud bolts shall be threaded full length with two heavy hexagonal nuts unless otherwise specified. Length tolerance shall be in accordance with the requirement of Table D2 of Annexure-D of ASME B 16.5.

1.6 The nuts shall be double chamfered, semi-finished, heavy hexagonal type and shall be made by the hot forged process and stamped as per respective material specification.

1.7 Heads of jackscrews and m/c bolts shall be heavy hexagonal type. Jackscrew end shall be rounded.

1.8 Each size of studs & m/c bolts with nuts and jackscrews shall be supplied in separate containers marked with size and material specifications. 'CRYO' shall be marked additionally in case 'CRYO' is specified in the requisition.

1.9 All items shall be inspected and approved (stage-wise) by VCS.

1.10 The heat treatment for stud bolts & nuts shall be as per code unless mentioned otherwise.

1.11 All austenitic stainless steel bolts, nuts, screws shall be supplied in solution annealed condition unless specified otherwise in the material specification.

1.12 Any additional requirements specified in the requisition shall be fully complied with.

1.13 Stud bolts, nuts & jackscrews shall be impact tested wherever specified in the material specification and also where the material specification is indicated as "CRYO". For S.S. nuts and bolts minimum impact energy absorption shall be 27 Joules and test temperature shall be -196DC unless mentioned otherwise. For other materials impact energy and test shall be as per respective code.

1.14 Bolts/nuts of material of construction B7M/2HM shall be 100% Hardness tested as per supplementary requirement S3 of ASTM A193.

Copyright VCS Quality Services Private Limited – All rights reserved

1.15 When specified as galvanized, the studs, M/C bolts and nuts shall be 'hot dip zinc coated' in accordance with requirements of 'class C' of' ASTM A 153'. As an alternative, electro-galvanizing as per IS 1573, 'Service Grade Number 2' is also acceptable.

1.16 All Stud Bolts of Bolt diameter size 1" and above shall be provided with three nuts irrespective of whatever has been specified elsewhere in the MR.

1.17 Bolting shall be protected by non-corrosive oil or grease before dispatch to prevent rusting.

1.18 For stud bolt diameters not covered in ASTM A320, mechanical properties shall match the values specified for the matching grades and stud bolt diameters in ASTM A 193.

1.19 In cases where the lengths of Stud/Machine bolts specified in the MR are not multiples of 0.25", the length supplied shall be equal to the specified length rounded up to the next higher 0.25".

1.20 All Specialties mentioned in item description like "IBR", "L T", "H2", etc. other than **"CRYO" & "NACE**" shall be ignored.

2.0 ACCEPTABLE DEVIATIONS

2.1 Nuts' to ASTM A194Gr.7 are acceptable in place of ASTM A194Gr 4.

2.2 Stud Bolts to ASTM A453 Gr.660 C1.B are acceptable in lieu of ASTM A453 Gr.660C1.A and vice versa

Copyright VCS Quality Services Private Limited – All rights reserved

ENERGISING QUALITY

VCS QUALITY SERVICES PVT. LTD.

TECHINCAL NOTES FOR GASKETS

VPC-SS-PP-2511

00	**28.01.2020**	**MB**	**AK**	**AD**	**SK**
Rev. No	**Date**	**Prepared By**	**Checked By**	**Approved By**	**Authorized By**

UNCONTROLLED COPY	**:**	**If printed**
CONTROLLED COPY	**:**	**If in soft and signed**

Copyright VCS Quality Services Private Limited – All rights reserved

REVISION RECORD						
Rev.	**Revision Date**	**Prepared by**	**Checked by**	**Approved by**	**Authorized by**	**Revision Description**
00	28.01.2020					
		MB	AK	AD	SK	

Copyright VCS Quality Services Private Limited – All rights reserved

Abbreviations:

AARH	Average Arithmetic Root Height
BHN	Brinnel Hardness Number
CS	Carbon Steel
MR	Material Requisition
PMI	Positive Material Identification
RTJ	Ring Type Joint

Copyright VCS Quality Services Private Limited – All rights reserved

CONTENTS

1.0 GENERAL..... 5

Copyright VCS Quality Services Private Limited – All rights reserved

1.0 GENERAL

1.1 All gaskets shall conform to the codes/standards and specifications given in the requisition. Supplier shall strictly comply with MR/PR stipulations and no deviations shall be permitted.

1.2 Process of manufacture, dimensions and tolerances not specified in requisition shall be in accordance with the requirements of the manufacturer's standards.

1.3 Testing

1.3.1. Test reports shall be supplied for all mandatory tests for gaskets as per the standards specified in the requisition.

1.3.2. Chemical composition and hardness of RTJ gaskets shall also be furnished in the form of test reports on samples.

1.3.3. For Spiral wound material following shall be furnished:

a. Manufacturer's test certificate for filler material and spiral material as per the relevant material specifications.

b. Manufacturer's test certificate for raw materials and tests for compressibility! seal- ability & recovery as per the relevant material specifications.

1.3.4. Refer Specification no VCS-PL-ITP-0013 for 'Inspection & Test Plan for Gaskets'.

1.4 Full face gaskets shall have bolt holes punched out.

1.5 Filler material for spiral wound gaskets shall not have any colour or dye.

1.6 All spiral wound gaskets shall be supplied with Outer ring. Material of the outer ring shall be CS unless otherwise specified in the MR.

1.7 For spiral wound gaskets, material of Inner Compression ring shall be same as Spiral Strip material. Inner rings shall be provided for all Spiral Wound Gaskets.

1.8 Hardness of metallic RTJ gaskets shall not exceed the values specified below unless otherwise specified in MR:

Ring Gasket Material	Maximum Hardness (BHN)
Soft Iron	90
Carbon steel	120
5 Cr. $^{1}/_{2}$ Mo	130
Type 304, 316, 321, 347	140
Type 304L, 316L	120
Inconel UNS N06625	200
Incoloy UNS N08825	190
Duplex SS UNS N032205, N031803	230

1.3.5. Face finish of metallic RTJ gaskets shall be 32 to 63 AARH.

Copyright VCS Quality Services Private Limited – All rights reserved

1.3.6. Gaskets of different types and sizes shall be placed in separate shipping containers and each container clearly marked with the size, rating, material specification and item code.

1.3.7. All items shall be inspected and approved by VCS.

1.3.8. Any additional requirements specified in the requisition, shall be fully complied with.

1.3.9. Non-metallic ring gaskets as per ASME B 16.21 shall match flanges to ASME B 16.5 upto 24" and to ASME B 16.47B above 24" unless specified otherwise.

1.3.10. Spiral wound gasket as per ASME B 16.20 shall match flanges to ASME B 16.5 upto 24" and to ASME B 16.47B above 24" unless specifically mentioned otherwise.

1.3.11. The following abbreviations have been used in the Material Requisition for Spiral Wound Gaskets:

(I)	:	Inner Ring
(O)	:	Outer Ring
GRAFJL	:	Grafoil Filler

1.3.12. Specialties mentioned in item description like "IBR", "LT", "HICI", "H2", etc. shall be ignored.

Copyright VCS Quality Services Private Limited – All rights reserved

ENERGISING QUALITY

VCS QUALITY SERVICES PVT. LTD.

STANDARD SPECIFICATION FOR POSITIVE MATERIAL IDENTIFICATION AT CONSTRUCTION SITES

VPC-SS-PP-2520

00	**28.01.2020**	**MB**	**AK**	**AD**	**SK**
Rev. No	**Date**	**Prepared By**	**Checked By**	**Approved By**	**Authorized By**

UNCONTROLLED COPY	**:**	**If printed**
CONTROLLED COPY	**:**	**If in soft and signed**

Copyright Quality Services Private Limited – All rights reserved

Rev.	Revision Date	Prepared by	Checked by	Approved by	Authorized by	Revision Description
00	28.01.2020					
		MB	AK	AD	SK	

Copyright VCS Quality Services Private Limited – All rights reserved

Abbreviations:

API	American Petroleum Institute
ASM	American Society for Metals
ASME	American Society of Mechanical Engineers
ASTM	American Society for Testing and Materials
PMI	Positive Material Identification
RTJ	Ring Type Jacket
TPI	Third Party Inspection

Copyright VCS Quality Services Private Limited – All rights reserved

Contents

1.0 SCOPE 5
2.0 DEFINITIONS 5
3.0 SPECIFIC APPLICABILITY 5
4.0 REFERENCES 6
5.0 GENERAL REQUIREMENTS 6
6.0 EXTENT OF PMI 6
7.0 PMI IN WAREHOUSE 7
8.0 PMI OF PIPING AND HEATER COIL COMPONENTS 7
9.0 TESTING METHODOLOGY 7
10.0 CHARACTERISTIC ELEMENTS 7
11.0 CALIBRATION 8
12.0 SITE VERIFICATION OF ANALYZER 8
13.0 PERSONNEL QUALIFICATION 8
14.0 ACCEPTANCE CRITERIA 8
15.0 REJECTION CRITERIA 9
16.0 DOCUMENTATION 9

Copyright VCS Quality Services Private Limited – All rights reserved

1.0 SCOPE

1.1 This specification applies to metallic alloy materials used in piping, heater coils, storage tanks, vessels etc. at construction sites. Positive Material Identification (PMI) is to be carried out on Owner supplied material as well on materials purchased by the contractor.

1.2 Any deviation from this specification must be approved by Owner/VCS in the prescribed format.

1.3 Carbon steels are excluded from the scope of this specification.

2.0 DEFINITIONS

2.1 POSITIVE MATERIAL IDENTIFICATION (PMI)

The term Positive Material Identification (PMI) refers to determination/verification of alloy type or its composition using portable or mobile spectrometer/alloy analyzer.

Chemical spot checking, resistivity testing, eddy current testing, electromagnetic alloy sorting, thermoelectric testing shall not be considered as PMI for the purpose of this specification.

3.0 SPECIFIC APPLICABILITY

3.1 The following items require PMI unless specifically exempted through a Concession/ Deviation permit by Owner/VCS.

3.1.1 All pressure containing piping components including, thermo wells instrument manifolds, RTJ gaskets, fasteners etc.

3.1.2 Tubular products used in the fabrication of heaters.

3.1.3 Pressure - containing instrument housings (e.g. gauge glass housings, orifice meter tubes).

3.1.4 Internal metallic linings/cladding, and weld overlay, done at site, used for protection against corrosive environments.

3.1.5 Tubing

3.1.6 Stud, bolts and nuts

3.1.7 Plates

3.1.8 All pressure containing welds.

3.1.9 Any other components or materials specifically designated for PMI on the purchase order/contract.

3.2 EXCLUSIONS

The following items are exempted unless specifically designated for PMI in the purchase order/contract:

3.2.1 Gaskets (spiral wound or carbon steel only).

3.2.2 Internal instrument parts.

3.2.3 Internal machinery parts.

3.2.4 Internal non pressure containing baffles, trays, tray clips, supports, pall-rings, support rings, etc.

3.2.5 Electrical components.

Copyright VCS Quality Services Private Limited – All rights reserved

3.2.6 Internal valve components.

3.2.7 Compression-type ferrules and fittings for use with 3/4 inch (19mm) outside diameter and smaller tubing.

4.0 REFERENCES

American Society of Mechanical Engineers (ASME) BPV Code Section-II Part A, B, C and D ASME B 31.3

American Society for Testing and Materials (ASTM): As applicable

Material Verification Program for New and Existing Alloy Piping Systems: API RP 578

Any other material specification referenced by the Purchase Order/Contract.

5.0 GENERAL REQUIREMENTS

5.1 The test methods outlined in this specification are intended to identify the nominal composition of alloy materials. These test methods are not intended to establish the conformance of a material to a particular alloy specification.

5.2 PMI shall not be considered as a substitute for required mill test reports listing chemical composition. In addition, mill test reports shall not be considered as confirming alloy verification.

5.3 The PMI activity shall be included in the overall quality plan and Inspection & Test Plan for warehouse and fabrication/erection. The contractor shall submit to VCS/Owner, a procedure for PMI to comply with the requirements of this specification. Approval of PMI procedure shall be obtained from Owner/VCS prior to commencement of fabrication/erection as the case may be.

5.4 A copy of daily PMI records shall be submitted to Owner/ VCS.

5.5 After installation, but prior to hydrostatic testing/painting/insulation, the contractor shall examine all components requiring PMI for proper compliance to this specification. A record of this final check, as specified below, shall be submitted to VCS/Owner and made part of the permanent inspection records.

5.5.1 Owner supplied material:

Records signed by contractor and duly certified by VCS/Owner.

5.5.2 Contractor supplied material:

Records signed by contractor and certified by an approved third party inspection agency.

5.6 After acceptance, all components shall be marked with a suitable paint mark. Markings must be permanent and readily visible. These markings are in addition to markings required by other codes/specifications/Technical Notes.

5.7 Controls shall be established to keep the non-conforming items identified till proper resolution of non-conformity.

5.8 VCS/Owner shall have the right to witness the performance of any PMI test.

6.0 EXTENT OF PMI

PMI shall be done on each component (100 percent PMI inspection) including welds, unless specifically exempted by Owner/VCS.

Copyright VCS Quality Services Private Limited – All rights reserved

All non- pressure parts such as pipe supports shall require 10% PMI (i.e. out of 10 such components). For each non conformity detected, the extent of PMI shall double.

One stud & nut assembly for each flange joint shall require PMI. If any non- conformity is detected, all studs & nuts in the particular piping loop shall require PMI.

7.0 PMI IN WAREHOUSE

PMI testing to be performed as part of the receiving inspection at warehouse.

The extent of PMI shall be as specified in 6.0. However, if PMI testing has been carried out at vendor/manufacturer's shop and relevant certified records and correlation with incoming material is available, PMI testing at warehouse need not be done.

PMI testing done as a part of receiving Inspection shall not be regarded as an alternative to PMI testing of the installed system.

8.0 PMI OF PIPING AND HEATER COIL COMPONENTS

PMI testing (irrespective of PMI done at earlier stages) shall be carried out when piping loops/heater coils have been cleared for hydrostatic testing by VCS/Owner. Hydrostatic Testing shall be carried out only when non- conforming components have been replaced with conforming components and subsequent Non Destructive Testing, Post Weld Heat-Treatment, Hardness checking etc., as required by specifications have been completed. PMI records shall form a part of piping/heater inspection records. Contractor shall demonstrate to Owner/ VCS that each & every component of the piping system and heater coils has been subjected to PMI by providing line wise records of PMI.

9.0 TESTING METHODOLOGY

In general, portable X-Ray Fluorescence (XRF) type alloy analyzers such as Oxford Instruments X-Met 3000 TX, X-Met 2000 Metal Master, NITON's XLt or NITON II or similar analyzer shall be used for carrying out PMI. Identification of characteristic alloying elements (see 10.0 for examples), which distinguishes the material from other materials, will be sufficient. Generally, 5 to 10 seconds exposure (Id-mode) is sufficient for this purpose. However, in case of doubt, Owner/VCS may insist on complete analysis.

The surface of the component to be subjected to PMI shall be free from grease, oil, paint or oxides. Testing shall be done after proper surface cleaning and other requirements as outlined by the manufacturer of the portable alloy analyzer. Modification, if any, of these procedures must be approved by Owner/VCS.

10.0 CHARACTERISTIC ELEMENTS

Material Specification		Characteristic Elements
ASTM A 335	Gr P11	Cr, Mo
	Gr P5	
	Gr P22	
	Gr P9	

Copyright VCS Quality Services Private Limited – All rights reserved

ASTM A 312	Type 304	Cr, Ni
	Type 316	Cr, Ni, Mo
	Type 321	Cr, Ni, Ti
	Type 347	Cr, Ni, Columbium, Tantalum

Characteristic elements for materials not listed above shall be proposed by the contractor for approval of the Owner/VCS.

11.0 CALIBRATION

11.1 Instruments used for PMI shall have the sensitivity to detect the alloying elements in the specified ranges. Instruments or methods used for examination shall be of the type that will provide quantitative, recordable, elemental composition results for positive identification of the alloy elements present.

11.2 Each alloy analyzer shall be calibrated using known alloy standards for intended materials to be checked by PMI. A calibration certification from the Manufacturer or his authorized agency shall be submitted to VCS/Owner for records. As such, calibration at site is not envisaged.

11.3 VCS/Owner shall review the procedure and qualification and witness sample alloy verification tests to confirm that the procedures, equipment and personnel are capable of providing consistent and accurate results.

12.0 SITE VERIFICATION OF ANALYZER

Verification using Standard samples supplied by institutes such as ASM (American Society of Metals) for the intended materials type and grade shall be performed each day before using the analyzer. Such a verification shall be done again if PMI test is to be performed on different grade or type of material.

13.0 PERSONNEL QUALIFICATION

The persons performing the PMI test should be knowledgeable about properties of material, all aspects of operation of PMI equipment including the method of testing. Qualification/experience documents of the person performing the PMI test including his training and experience shall be submitted to VCS/Owner for review and approval.

14.0 ACCEPTANCE CRITERIA

14.1 BASE METAL

PMI test results showing presence of characteristic elements upto 10% less than the minimum specified value in the material specification and upto 10% more than the maximum specified value in the material specification shall be acceptable.

14.2 DEPOSITED WELD METAL

For deposited weld metal between base metals of the same specification using matching consumables, the recorded presence of characteristic elements upto 12.5% less than the minimum specified value in the welding consumables specification and upto 12.5% more than the maximum specified value in the welding consumable specification shall be

Copyright VCS Quality Services Private Limited – All rights reserved

acceptable.

15.0 REJECTION CRITERIA

15.1 If the PMI test results fall outside the acceptable range as given in 14.0 above, the contractor shall obtain a quantitative check analysis performed by a laboratory acceptable to VCS/Owner for a complete chemical analysis. Results of this analysis shall be submitted to VCS/Owner, with contractor's recommendation, for final decision.

Decision of VCS/Owner shall be final in this regard.

15.2 If any material component or weld is found unacceptable, all other represented materials (e.g. in case of fasteners, supports) or welds shall be considered suspect. In such cases, the contractor has the following options:

15.2.1 Scrapping all those represented materials or components and replacing with new components or welds.

15.2.2 Performing 100% examination of the remainder of the represented materials/ components and replacing each item that fails the PMI check.

15.2.3 If the performance of any verification activity is unacceptable to VCS/Owner or if any material has been incorrectly identified, all further tests shall be subject to VCS/Owner approval until the problem is corrected.

16.0 DOCUMENTATION

16.1 Print out from alloy analyzer, in original, duly certified by the contractor/ PMI agency.

16.2 Basis and action for resolving and documenting PMI non conformances.

16.3 Contractor shall demonstrate to VCS/Owner that all components requiring PMI have been subjected to PMI testing and accepted.

Copyright VCS Quality Services Private Limited – All rights reserved

REPORT NO: _____

Contractor _____

Date of PMI_____

Project _____

Inspection Agency _____

Location _____

PMI Agency _____

Job No. _____

PMI Equipment Model _____

Line No. /ISO Drg. No_____
/Heater No./Drawing No

Make & Serial No. _____

Sr. No.	Part Identification	Material As per Drg./spec	Material as per PMI	Result (Accepted/Rejected/ Retest)

(PMI AGENCY) (TPI AGENCY) (CONTRACTOR) (EIL/OWNER)

Copyright VCS Projects Consultants Private Limited – All rights reserved

ENERGISING QUALITY

VCS QUALITY SERVICES PVT. LTD.

STANDARD SPECIFICATION

FOR
FLOW TEE

VPC – SS – PP - 2007

02	28.01.2020	MB	MC	AD	SK
Rev. No	**Date**	**Prepared By**	**Checked By**	**Approved By**	**Authorized By**

UNCONTROLLED COPY	:	If printed
CONTROLLED COPY	:	If in soft and signed

Copyright VCS Quality Services Private Limited – All rights reserved

REVISION RECORD						
Rev.	**Revision Date**	**Prepared by**	**Checked by**	**Approved by**	**Authorized by**	**Revision Description**
00	23.06.2017					Issued as Standard Specification
		AS	SM	AD	SK	
01	24.05.2019					Re-Issued as Standard Specification
		BS	MC	AD	SK	
02	28.01.2020					Document formatting, numbering updated from SS-PL-021 to VPC-SS-PP-2007 other detail update as marked
		MB	MC	AD	SK	

Copyright VCS Quality Services Private Limited – All rights reserved

ABBREVIATIONS:

ASME	American Society of Mechanical Engineers
ASTM	American Society for Testing and Materials
API	American Petroleum Institute
BHN	Brinell Hardness Number
HAZ	Heat Affected Zone
MSS-SP	Manufacturers Standardization Society - Standard Practice
RTJ	Ring Type Joint
SSPC	Steel Structures Painting Council

Copyright VCS Quality Services Private Limited – All rights reserved

CONTENTS

1.0 SCOPE 5
2.0 REFERENCE DOCUMENTS 5
3.0 MANUFACTURER'S QUALIFICATION 6
4.0 MATERIALS 6
5.0 DESIGN AND MANUFACTURE 7
5.1 GENERAL 7
5.2 DESIGN 7
6.0 WELDING 8
7.0 INSPECTION & TESTS 9

Copyright VCS Quality Services Private Limited – All rights reserved

1.0 SCOPE

This specification covers the minimum requirements for the design, manufacture and supply of carbon steel flow tees to be installed in onshore pipeline systems handling non-sour hydrocarbons in liquid or gaseous phase including Liquefied Petroleum Gas (LPG).

2.0 REFERENCE DOCUMENTS

The design, fabrication and supply of Flow Tees shall comply with the latest edition of the applicable following codes and standards.

AMERICAN SOCIETY OF MECHANICAL ENGINEERS (ASME)

B 31.4	:	Pipeline Transportation System for Liquid Hydrocarbons and Other Liquids.
B 31.8	:	Gas Transmission and Distribution Piping Systems
B 16.25	:	Butt Welding Ends
B 16.9	:	Factory made Wrought Steel Butt Welding Fittings
BPV Code	:	Section VIII, Appendices 12 and 6.

AMERICAN PETROLEUM INSTITUTE (API)

1104	:	Specification for Welding Pipelines and Related Facilities

AMERICAN SOCIETY FOR TESTING AND MATERIALS (ASTM)

A370	:	Standard Test Methods and Definitions for Mechanical Testing of Steel Products

MANUFACTURERS STANDARDIZATION SOCIETY (MSS)

SP-25	:	Standard Marking System for Valves, Fittings, Flanges and Unions
SP-75	:	Specification for High Test Wrought Butt Welding Fittings
SP-53	:	Quality Standard for Steel Castings and Forgings for Valves, Flanges and Fittings and Other Piping Components - Magnetic Particle Examination Method.

STEEL STRUCTURES PAINTING COUNCIL (SSPC)

VIS-I	:	Visual Standard

OIL INDUSTRY SAFETY DIRECTORATE (OISD)

Std. 141	:	Design and Construction Requirements for Cross Country Hydrocarbon pipelines.

Copyright VCS Quality Services Private Limited – All rights reserved

Std. 226 : Natural Gas Transmission Pipelines and City Gas Distribution Network.

Std. 214 : Cross Country LPG Pipeline

In case of conflict between various requirements of this specification and reference standards mentioned above, more stringent requirement shall apply unless otherwise agreed by Purchaser.

3.0 MANUFACTURER'S QUALIFICATION

Manufacturers who intend bidding for flow tees must possess the records of a successful proof test for tees used in the fabrication of flow tees, in accordance with the provisions of ASME B 16.9/ MSS-SP-75, as applicable. These records shall be submitted at the time of bidding qualifying the entire range of fittings offered.

4.0 MATERIALS

4.1 Material for the pressure containing parts of the flow tee shall be as indicated in the Flow Tee Data Sheet. Other parts shall be as per the Manufacturer's standard suitable for the service conditions and shall be subject to approval by Company. In addition, the material shall also meet the requirements specified hereinafter.

4.2 All carbon steel used for fabrication of various components of Flow Tees shall be fully killed.

4.3 Each heat of steel used for the manufacture of pressure containing parts of the flow tees shall have Carbon Equivalent (CE) not greater than 0.45 based on check analysis calculated as per the following formula:

$$CE = C + \frac{Mn}{6} + \frac{Cr + Mo + V}{5} + \frac{Cu + Ni}{15}$$

The Vendor shall submit the material test certificates and product analyses for materials used in the manufacture of the Flow Tees.

4.4 For flow tees specified to be used for Gas service or LPG service, Charpy V-notch test shall be conducted at 0°C or at temperature as specified on data sheet for each heat of steel used in the manufacture of pressure containing parts of flow tee. The test procedure shall conform to MSS-SP-75 / ASTM A370. The average absorbed impact energy values of three full-sized specimens of base metal, weld metal and HAZ shall be 27 joules, unless otherwise indicated in the Data Sheet. The minimum impact energy value of any one specimen shall not be less than 22J. Results of charpy test shall be recorded.

When Low Temperature Carbon Steel (LTCS) materials are specified in Data Sheet or offered by Manufacturer, the Charpy V-notch test requirements of applicable material standard shall be complied with.

4.5 For flow tees specified to be used for Gas service or LPG service, hardness test shall be carried out as per ASTM A370 for each heat of steel used in the manufacture of tees. A full thickness cross section shall be taken for this purpose and the maximum hardness of base metal, weld metal and HAZ of all the pressure containing parts shall not exceed 248 HV_{10}. Hardness shall be recorded.

Copyright VCS Quality Services Private Limited – All rights reserved

5.0 DESIGN AND MANUFACTURE

5.1 GENERAL

Flow Tees shall generally conform to the Figure 4.1 and shall meet the following requirements.

a. Tee used shall comply with ASME B 16.9/MSS-SP-75 and shall be of forged construction. Fabricated Tee (with or without reinforcement pads) shall not be used. Seamless Tee shall be used for run sizes ≤ 400 mm (16") NB. Tee shall be either welded or seamless type for run sizes ≥ 450 mm (18") NB.

b. Size & wall thickness of connected pipeline, design factor, material & grade of material, and corrosion allowance to be considered in design of Flow Tees shall be as indicated in data sheets. Allowable stresses shall be as per applicable design code ASME B 31.4/ASME B 31.8.

c. Inside diameter of internal pipe shall be same as connecting pipeline indicated in data sheet.

d. The Flow Tee shall allow smooth passage of regular batching and cleaning pigs as well as instrumented pigs in both directions.

e. Internal sleeve shall be fixed inside the Tee with suitably shaped forged steel end pieces. Machined end pieces shall not be used.

f. Shape of the holes/slots in the sleeve shall be designed to prevent pig getting stuck or damaged during passage through Flow Tee.

g. The size and number of holes in the internal sleeve shall be such that resulting area of openings is equal to inside area of branch. In case rectangular holes/slots are made, they shall be oriented at an angle of 45 degrees with respect to run centerline.

h. No pups shall be provided on the run or branch unless specified in the Flow Tee Data Sheet.

5.2 DESIGN

5.2.1 Flow tees shall be designed and manufactured in accordance with the provisions of Codes, Standards and Specifications referred in Section 2.0 of this specification. In addition, design factor and corrosion allowance, as indicated in the Data Sheet, shall also be taken into account for design of Flow tees.

5.2.2 Flow tees shall generally conform to the figure shown in the Data Sheet and shall meet the following requirements:

- An internal pipe having the same internal diameter as the connecting pipeline allowing the passage of scraper/instrumented pigs, shall be provided with holes/slots located in the center line of the branch. The holes/slots shall be oriented at 45° angle. The number(s) and size of holes/slots shall be such as to prevent the pig getting stuck or damaged without affecting the flow through the branch line. The area of the holes/slots shall be at least equal to the internal area of branch size.

Copyright VCS Quality Services Private Limited – All rights reserved

Calculations for the area shall be furnished.

- A seamless/submerged arc welded "tee" as per ASME B 16.9/MSS-SP-75, enclosing the internal pipe and fixed to it by suitably shaped forged steel rings. Machined steel rings shall not be used. The center to end dimension of the outlet shall meet the minimum recommended dimension of the referred standard. Circumferential welding on the branch outlet is not acceptable. Pups shall not be provided either at the run or at the branch.

- Tees used for fabrication of flow tees shall be seamless type for run sizes DN≤ 350mm (14") and shall be either welded or seamless type for run sizes DN≥ 400 mm (16")

  Tees shall conform to ASME B 16.9 for run size up to DN 350 (14"). For run size DN ≥ 400 mm (16"), the tees shall conform to MSS-SP-75/ASME B 16.9.

5.2.3 The flow tees run/branch diameter and wall thickness shall be as indicated in the Data Sheet, matching with the connecting pipeline. Butt weld ends of flow tees shall be bevelled as per MSS-SP-75.

5.2.4 All flow tees shall be completely stress relieved as per the provisions of MSS-SP-75.

5.2.5 Stub-in or pipe-to-pipe connection shall not be used in the manufacture of flow tees. Tees used for manufacturing of flow tees shall be manufactured by forging or extrusion methods only. Incase flow tees are manufactured using welded tees, the longitudinal weld seam shall be oriented at least 90° to the branch connection.

5.2.6 All welds shall be made by welders and welding procedures qualified in accordance with the provisions of ASME Section IX. The procedure qualification shall include impact test and hardness test and shall meet the requirements of clause 4.4 and 4.5 of this specification respectively.

5.2.7 Repair by welding on parent metal of the flow tee is not permitted. Repair of weld seam by welding shall be carried out only after specific approval by Company's Inspector for each repair. The repair welding shall be carried out by the welders and welding procedures duly qualified as per ASME Section IX and records for each repair shall be maintained. Repair welding procedure qualification shall include all tests, which are applicable for regular production welding procedure qualification. All heat treatment and radiography shall be repeated after the weld repair.

5.2.8 The tolerance on internal diameter and out of roundness at the ends for welded flow tees shall be as per applicable connected pipe specification as indicated in the Data Sheet.

6.0 WELDING

6.1 All welding shall be carried out by welders and welding procedure qualified in accordance with ASME Section IX. The Procedure qualification shall include impact test and hardness test and shall meet the requirement of clause 3.3 and 3.5 of this specification respectively.

Copyright VCS Quality Services Private Limited – All rights reserved

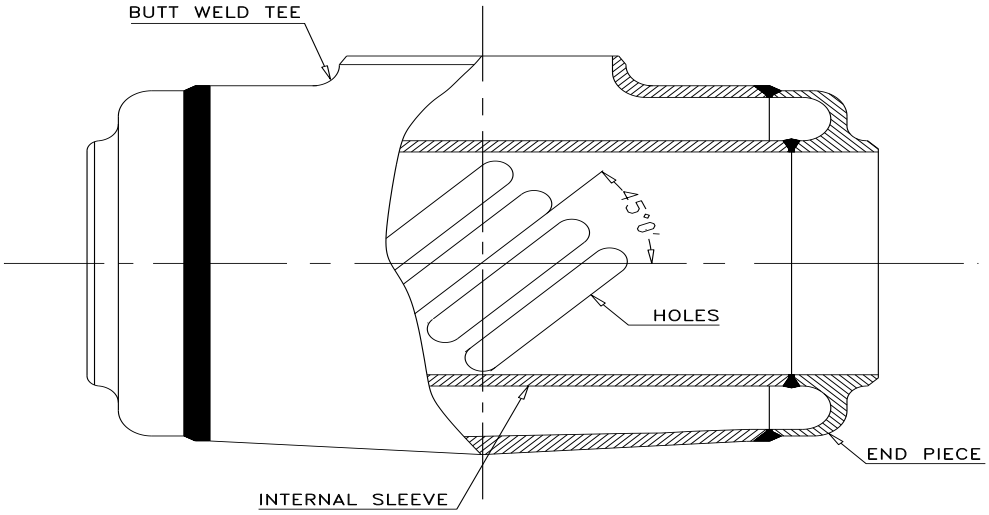

Figure 4.1

6.2 No repairs by welding shall be carried out on base metal of pressure containing components of Flow Tee. Manufacturer shall obtain Purchaser approval prior to carrying out any repair of welds. Repair welding shall be carried out by welders and welding procedures duly qualified as per ASME Section IX and records for each repair shall be maintained. Repair WPS and PQR must also be approved before performing repair welding.

6.3 All pressure containing welds made for fabrication of Flow Tees shall be butt welds. Other welds shall be full penetration girth or fillet welds.

6.4 All weld ends shall be checked for surface defects using dye penetrate prior to welding.

6.5 Bevel ends for field welding of Flow Tees shall be in accordance with ASME B31.4 or B31.8, as applicable.

6.6 All flow tees shall be completely stress relieved as per the provisions of MSS-SP-75.

7.0 INSPECTION & TESTS

7.1 The Manufacturer shall perform all inspections and tests as per the requirements of this specification and the relevant codes, standards and specifications, prior to shipment at his works. Such inspections and tests shall be, but not limited to, the following:

7.2 All flow tees shall be visually inspected for visible surface defects. The internal and external surfaces of the flow tees shall be free from any strikes, gauges and other detrimental defects. Bevels at butt weld ends shall show a smooth contour.

7.3 All dimensions shall be checked for conformance with approved drawings and/or datasheets.

7.4 Chemical composition and mechanical properties including yield strength, ultimate tensile strength, impact test, elongation and hardness shall be checked as per MSS-SP-75/relevant material standards, and this specification for each heat of steel used.

Copyright VCS Quality Services Private Limited – All rights reserved

7.5 Non-destructive examination of individual flow tees shall be performed as given below:

- 100% inspection by radiography shall be carried out on all butt welds of pressure containing parts. Acceptance limits shall be as per API-1104. Radiography shall be performed after the final heat treatment.
- All finished wrought weld ends shall be 100% ultrasonically tested for lamination type defects for a distance of 25 mm from the end. Any lamination larger than 6.35 mm shall not be acceptable.
- Magnetic particle or liquid penetrant examination shall be performed on cold formed butt-welding tees with extruded outlets. The examination shall be carried out as per the Supplementary Requirement SR 14 of MSS-SP-75.
- Welds, which, in Company's Inspector's opinion, cannot be inspected by radiographic methods, shall be checked by ultrasonic or magnetic particle methods. Acceptance criteria shall be as per ASME Section VIII Appendix 12 and Appendix 6 respectively.
- All forgings shall be wet magnetic particle examined on 100 % of the forged surfaces. Method and acceptance shall comply with MSS-SP-53.

7.6 Company's Inspector reserves the right to perform stage wise inspection and witness tests, as indicated in clause 6.1 of this specification, at Manufacturer's works prior to shipment. Manufacturer shall give reasonable notice of time and shall provide without charge reasonable access and facilities required for inspection to the Company's Inspector.

7.7 Inspection and tests performed/witnessed by Company’s Inspector shall in no way relieve the manufacturer’s obligation to perform the required inspection and tests.

7.8 The Manufacturer shall submit an Inspection and Test Plan (ITP) for approval prior to commencement of manufacture.

7.9 The Purchaser will advise the Manufacturer, by marking up the Contract Inspection and Test Plan, of the specific inspection review, witness and hold points required. The Manufacturer shall give ten working days prior notice to the Purchaser of such item or hold point being reached.

Following stages will be subject to witness/hold/review by the Purchaser or third party inspector.

- Visual inspection of the Flow Tees.
- Full dimensional checks.
- Material certification checks.
- Inspection of radiographs and other NDT results.
- Pressure testing.
- Surface finish and profile verification at each phase of surface preparation and coating.

Copyright VCS Quality Services Private Limited – All rights reserved

Where inspection or testing is to be performed by certified testing laboratories, the Manufacturer shall submit their proposed testing laboratory for approval.

The final inspection, before issue of a release note for the Flow Tees, shall include material certificates, test certificates, surface treatment, dimensional conformity, tagging and packing conformity.

8.0 HYDROSTATIC TESTING

In case factory hydrostatic is specified in the Datasheet, it shall be performed on the completed Flow Tee. Each tee shall be hydrostatically tested at a test pressure as indicated in Data Sheet. The test duration shall be of 15 minutes. No visible leakage or drop in pressure is permitted. After completion of the testing, closure shall be cut off and ends prepared.

9.0 TEST CERTIFICATES

Manufacturer shall submit the following certificates to Company's inspector:

- Test certificates relevant to the chemical analysis and mechanical properties including hardness of the materials used for construction as per this specification and relevant standards.
- Test reports on radiographic, ultrasonic inspection and wet magnetic particle examination.
- Test certificates for each flow tees stating that it is capable of withstanding without leakage a test pressure which results in a hoop stress equivalent to 95% of the specified minimum yield strength for the pipe with which the flow tee is to be attached without impairing its serviceability.
- Test reports on heat treatment carried out as per specification.
- Welding procedures and welder’s qualification reports.
- Certified reports of dimensional tolerances.
- Certified report of painting/coating thickness checks.
- Certificates of all other tests specified in this specification.

All pressure retaining part (Tee and End Pieces) material certification shall be traceable to heat numbers. Certificates shall be available at final inspection in the Manufacturer's works.

10.0 PAINTING, MARKING & SHIPMENT

10.1 All Flow Tees shall be packed and prepared for shipment/transport in with the procedures included in the Material Requisition (MR)/ Tender.

10.2 The Manufacturer shall supply packing and shipping procedure with the tender.

10.3 After all inspection and tests required have been carried out/witnessed by Company's Inspector, entire surface of flow tees shall be thoroughly cleaned to remove grease, dust

Copyright VCS Quality Services Private Limited – All rights reserved

and rust and shall be applied with sufficient coats of standard mill coating/corrosion resistant paint, for protection against corrosion during transit and storage. The surface preparation shall be carried out by shot blasting to SP 10 in accordance with "Steel Structures Painting Council - Visual Standard - SSPC-VIS-I".

10.4 All buried flow tees as specified in data sheet shall be coated with 100% solid high build epoxy (minimum 1000-micron thk) or 1.5 mm thick polyurethane coating.

10.5 Manufacturer shall indicate the type of mill coating / corrosion resistant paint used in the drawings submitted for approval.

10.6 Ends of flow tees shall be suitably protected to avoid any damage during transit. Metallic or high impact plastic bevel protectors shall be provided for weld ends of flow tees.

10.7 Flow tees shall be marked with indelible paint with the following data:

- Manufacturer's name
- Nominal diameter of run and branch
- Nominal thickness of run and branch ends
- Material of Construction / Tee and End Piece material and grade
- Test Pressure.
- Year of Manufacture.
- Tag number

11.0 DOCUMENTATION

Documentation to be submitted by Manufacturer to Company is summarized below. Number of Copies (Hard copies / soft copies etc.) shall be as indicated in CONTRACT document.

11.1 At the time of bidding, Bidder shall submit the following documents:

- Reference list of similar supplies including all relevant details viz. Project, Year of supply, Client, Location, Size, Rating and Service for the last five years.
- Records of successful proof test for tees used for fabrication of flow tees, qualifying the range of sizes quoted.

11.2 After placement of order, the Manufacturer shall submit the following drawings, documents and specifications for company's review and information:

- General arrangement drawings of flow tees with overall dimensions and cross-sectional drawing including relevant calculations for pressure containing parts.
- Method of manufacturer, welding procedure and heat treatment details.
- Quality Control Manual and Quality controls Plans.
- Type of mill coating/anti-corrosion/anti-fouling paint

Copyright VCS Quality Services Private Limited – All rights reserved

Once the approval has been given by the company, any change in design, material and method of manufacturer shall be notified to the company whose approval in writing of all changes shall be obtained before the flow tees are manufactured.

11.3 All documents shall be in English Language.

Copyright VCS Quality Services Private Limited – All rights reserved

ENERGISING QUALITY

VCS PROJECT CONSULTANTS PVT. LTD.

STANDARD SPECIFICATION
FOR
CO2 TYPE EXTINGUISHER

VPC-SS-ME-3003

Rev. No	Date	Prepared By	Checked By	Approved By	Authorized By
01	01.11.2019	SS	RNR	RNR	SK
00	20.03.2019	SS	RNR	RNR	SK

UNCONTROLLED COPY	**:**	**If printed**
CONTROLLED COPY	**:**	**If in soft and signed**

Copyright VCS Projects Consultants Private Limited – All rights reserved

REVISION RECORD

Rev.	Revision Date	Prepared by	Checked by	Approved by	Authorized by	Revision Description
00	20.03.2019	SS	RNR	RNR	SK	Issued for use as standard
		Satish Singh	RN Rai	RN Rai	Suresh Kumar	
01	01.11.2019	SS	RNR	RNR	SK	Format change and document is generally revised.
		Satish Singh	RN Rai	RN Rai	Suresh Kumar	

Copyright VCS Projects Consultants Private Limited – All rights reserved

ABBREVIATIONS:

kg	:	Kilogram
IS	:	Indian Standard
M.S.	:	Mild Steel

Copyright VCS Projects Consultants Private Limited – All rights reserved

CONTENTS

1.0 SCOPE 5
2.0 REFERENCES 5
3.0 MATERIAL, SHAPE, CONSTRUCTION, METHOD OF OPERATION, PERFORMANCE, CONTENTS AND TESTS 5
4.0 APPROVALS 5
5.0 MARKING 5
6.0 ACCESSORIES 5
7.0 INSPECTION 5

Copyright VCS Projects Consultants Private Limited – All rights reserved

1.0 SCOPE

This standard lays down requirements regarding material, shape, construction, method of operation performance and tests of portable fire extinguisher of carbon dioxide type. The extinguisher shall be supplied along with CO2 gas duly charged.

2.0 REFERENCES

IS: 2878 & IS: 307

3.0 MATERIAL, SHAPE, CONSTRUCTION, METHOD OF OPERATION, PERFORMANCE, CONTENTS AND TESTS

3.1 The material, shape, construction, method of operation, performance and test shall comply with IS: 2878.

3.2 Nominal size.

3.2.1 The extinguisher shall be of following nominal sizes in kg: 2, 3 and 5.0 for portable type and 7, 9 and 22.5 for trolley mounted.

3.3 Contents

3.3.1 Carbon dioxide gas used shall conform to IS: 307 and extinguisher shall be filled as per Clause no.4.0 of IS: 2878

4.0 APPROVALS

A clearance/ approval certificate for filling the extinguisher from "Chief Controller Explosive" Govt. of India, Nagpur shall be submitted for each cylinder.

5.0 MARKING

Each extinguisher shall be clearly and permanently marked as per IS: 2878 along with IS: certification mark and purchaser's name

6.0 ACCESSORIES

Each extinguisher shall be supplied with M.S. bracket, wood screws and spanner as may be necessary. The details of the bracket shall be submitted with the offer.

7.0 INSPECTION

Authorized representative shall have access at all reasonable time to the manufacturer's works where extinguishers ordered are being manufactured and or tested.

Copyright VCS Projects Consultants Private Limited – All rights reserved

ENERGISING QUALITY

VCS PROJECT CONSULTANTS PVT. LTD.

STANDARD SPECIFICATION
FOR
50 KG & 75 KG CAPACITY
DRY CHEMICAL POWDER EXTINGUISHER

VPC-SS-ME-3005

Rev. No	Date	Prepared By	Checked By	Approved By	Authorized By
01	01.11.2019	SS	RNR	RNR	SK
00	23.02.2018	SS	RNR	RNR	SK

UNCONTROLLED COPY	:	**If printed**
CONTROLLED COPY	:	**If in soft and signed**

Copyright VCS Projects Consultants Private Limited – All rights reserved

REVISION RECORD						
Rev.	**Revision Date**	**Prepared by**	**Checked by**	**Approved by**	**Authorized by**	**Revision Description**
00	23.02.2018	SS	RNR	RNR	SK	Issued for use as standard
		Satish Singh	RN Rai	RN Rai	Suresh Kumar	
01	01.11.2019	SS	RNR	RNR	SK	Format change and document is generally revised.
		Satish Singh	RN Rai	RN Rai	Suresh Kumar	

Copyright VCS Projects Consultants Private Limited – All rights reserved

ABBREVIATION

DCP	Dry Chemical Powder
IS	Indian Standard
OISO	Oil Industry Safety Directorate
PESO	Petroleum Explosive Safety Organization (formerly known as CCOE)

Copyright VCS Projects Consultants Private Limited – All rights reserved

CONTENTS

1.0 SCOPE 5
2.0 CODES AND STANDARDS 5
3.0 DESIGN REQUIREMENTS 5
4.0 MATERIAL OF CONSTRUCTION 5
5.0 SAFETY CLIP 5
6.0 MARKING 6
7.0 APPROVALS AND INSPECTION 6
8.0 INFORMATION REQUIRED FROM VENDOR 6

Copyright VCS Projects Consultants Private Limited – All rights reserved

1.0 SCOPE

This specification lays down the requirements regarding material, shape, construction, chemical charges, anticorrosive treatment, painting and test for trolley mounted dry powder fire extinguishers of capacities 50 kg and 75 kg.

2.0 CODES AND STANDARDS

IS: 10658	Specification for Higher Capacity Dry Powder Fire Extinguisher (Trolley Mounted).
OISD-GDN-115	Guidelines on Fire Fighting, Equipment and Appliances in Petroleum Industry.

Note: - Latest Edition of all standard documents shall be followed.

3.0 DESIGN REQUIREMENTS

3.1 The method of expulsion of dry powder shall be by means of pressure produced from compressed or liquefied gas from gas cylinder attached to the body or gas cartridge attached to the cap.

3.2 The total capacity of the dry powder extinguisher when filled for the various capacities shall be as under:

Nominal Size (Kg)	Dry Powder content (Kg. minimum.)
50	50
75	75

3.3 Discharge hose length shall be 5.0 M.

3.4 The expellant gas shall be CO2 unless otherwise specified.

4.0 MATERIAL OF CONSTRUCTION

4.1 The material of construction shall be as per IS: 10658 Standard Specification for Higher Capacity Dry Powder Extinguisher (Trolley Mounted).

4.2 Construction, anticorrosive treatment, painting, test requirement, wheeled carriage and other design criteria shall be as per IS: 10658.

5.0 SAFETY CLIP

Safety Clip should be provided to prevent accidental actuation of piercing mechanism.

Copyright VCS Projects Consultants Private Limited – All rights reserved

6.0 MARKING

Each extinguisher shall be clearly and permanently marked with the information specified in IS:10658 along with the BIS certification mark and purchaser's name.

7.0 APPROVALS AND INSPECTION

A clearance/approval certificate from the PESO, Nagpur shall be submitted for each N2 cylinder I gas cartridge supplied with the DCP extinguishers.

VCS or its authorised representatives shall have access at all reasonable times to the manufacturer's works where the extinguishers are being manufactured or being tested.

8.0 INFORMATION REQUIRED FROM VENDOR

8.1 The vendor shall furnish the following information along with the offer and for approval prior to fabrication.

- General arrangement of trolley mounted extinguisher showing plan and elevation.
- Fabrication details and plate thickness calculation for pressure vessel.
- Catalogues for all bought out items with Model No. If any.

8.2 Following information shall be furnished by the vendor along with the supply of extinguisher:

- Instruction book(s) - Instruction book(s) for guidance of the user including both the operating and normal maintenance procedures shall be supplied. The book(s) shall include an itemized and illustrated part list/spare parts list giving reference number of all the wearing parts.
- Duly approved final drawings listed in clause 8.1.
- A clearance/approval certificate from PESO as described in clause 7.

Copyright VCS Projects Consultants Private Limited – All rights reserved