ENERGISING QUALITY

VCS QUALITY SERVICES PVT. LTD.

STANDARD SPECIFICATION
FOR
THIRD PARTY INSPECTION AGENCY (TPIA)

VPC – SS – PP - 2031

00	28.01.2020	MB	MD	AD	SK
Rev. No	**Date**	**Prepared By**	**Checked By**	**Approved By**	**Authorized By**

UNCONTROLLED COPY	:	**If printed**
CONTROLLED COPY	:	**If in soft and signed**

Copyright VCS Quality Services Private Limited – All rights reserved

REVISION RECORD						
Rev.	**Revision Date**	**Prepared by**	**Checked by**	**Approved by**	**Authorized by**	**Revision Description**
00	28.01.2020					
		MB	MD	AD	SK	

Copyright VCS Quality Services Private Limited – All rights reserved

ABBREVIATIONS:

TPIA	THIRD PARTY INSPECTION AGENCY
QA	Quality Assurance
QC	Quality Control
LOI	Letter of Indent
QAP	Quality Assurance Procedure
ISS	International Standard Space
UPS	Uninterruptible Power Supply

Copyright VCS Quality Services Private Limited – All rights reserved

CONTENTS

1.0 INTRODUCTION 4
2.0 SCOPE OF WORK 4
3.0 ROLE OF CONTRACTOR 5
4.0 CO-ORDINATION WITH TPIA 5
5.0 INVOLVEMENT OF TPIA 5

Copyright VCS Quality Services Private Limited – All rights reserved

1.0 INTRODUCTION

The objective is to specify the role of Third-Party Inspection Agency (TPIA) appointed by Contractor for supply items and appointed by Owner for construction work.

The Contractor will appoint an independent approved Third-Party Inspection Agency (TPIA) whose role shall be to witness, review and certify all quality related issues for supply of material. The TPIA shall ensure that all quality related requirements during manufacturing are strictly followed as per Owner/Owner's representative specifications and approved documents. Owner shall appoint its TPIA for witness, review and certification of all the construction activities.

This Standard Specification also indicates general quality control requirements for various activities pertaining to Gas Pipeline Projects and the extent of TPIA involvement as indicated in tender shall be binding on the contractor.

2.0 SCOPE OF WORK

2.1 Role of TPIA for Supply Items

TPIA, as appointed by the Contractor from Owner's approved list, shall witness, review and certify all quality related activities for supply of material for Mechanical, Civil, Electrical and Instrumentation system. The extent of TPIA involvement as a minimum is indicated in the various Quality Control Sheets attached with the tender document and shall be as per final approved QA/QC procedures or as per codes and standards, wherever applicable.

2.2 Role of Owner / Owner's Representative for Supply Items

For supply items, Owner / Owner's Representative reserves the right to carryout independent inspection / audit of the plant during manufacturing. The extent of inspection shall be at the discretion of Owner / Owner's Representative. All costs related to the same (excluding travel expenses) shall be borne by Contractor

2.3 Role of TPIA for Construction Activity

TPIA, as appointed and paid by Owner will be involved in all inspection, witness & certify construction work. The extent of TPIA involvement will be shown in the various Quality control sheets prepared by Contractor and approved by Owner/ Owner's representative.

Prior to commencement of any activity pertaining to construction at site, Owner/Owner's representatives shall get the documents reviewed by the TPIA.

2.4 The various Hold points' involvement as mentioned in various QC sheets is indicative minimum. However, actual involvement shall be decided by Owner/Owner's Representative during review of documents, and Contractor shall be bound by the same. Contractor shall also submit the calibration certificates of all the equipment/instruments, which are part of manufacturing/Inspection & testing for TPIA review TPIA shall also be responsible to check /witness the necessary calibration of such equipment/Instruments during visit to contractor's works.

Copyright VCS Quality Services Private Limited – All rights reserved

3.0 ROLE OF CONTRACTOR

Contractor shall have to carry out all necessary inspections and testing which are indicated in approved documents and shall have to provide all necessary latest tools & tackles, measuring instruments and facilities, which are required by the TPIA/Owner /Owner's representatives and all necessary assistance to carryout inspection/testing at contractor's cost. Owner/Owner's representative shall have a right to inspect any activity.

4.0 CO-ORDINATION WITH TPIA

Contractor on award of the Contract/LOI shall submit the detail procurement and construction schedules within fifteen (15) days to Owner/Owner's representative for their approval. The detail item wise Manufacturing schedule indicating dates and location of manufacturer works shall be submitted by the Contractor within One (1) week from the date of issue of their internal Indent /Purchase order to sub vendor.

Contractor shall inform in writing minimum One (1) week in advance to inform the Owner/Owner's representative for Inspection Notice/Call. All coordination among Owner/Owner's representative/TPIA and Contractor's/ Vendor's works shall be the responsibility of Contractor. In case the Contractor fails to honour its inspection calls/notice, contractor has to reimburse all costs incurred by the Owner/Owner representative at actual.

Inspection of site construction activities shall be coordinated on daily basis and adequate notice shall be given to Owner/Owner's representative to mobilize TPIA, this shall be as per site conditions and requirements.

5.0 INVOLVEMENT OF TPIA

5.1 The Minimum requirements are indicated in the Quality Control Tables attached in tender document.

5.2 Civil

All procured items required for execution activities for civil works should satisfy the following conditions:

- It should be of reputed make having proven record of being successfully used in similar works earlier and as per approval by Owner / Owner's Representative.
- All materials shall be of standard quality and shall be procured from renowned sources / manufacturers approved by Owner/ Owner's representative.
- All tests of the materials as specified by the relevant codes should be carried out by the contractor in an approved laboratory and the test reports should be duly authenticated by the laboratory and should be submitted to TPIA for his approval. If so desired by Owner/ Owner's representative, tests shall be conducted in his presence or in presence of his authorized nominee.

Copyright VCS Quality Services Private Limited – All rights reserved

- Quality and acceptance of materials not covered under general technical specifications shall be governed by relevant codes.
- The Contractor shall submit manufacturer's test reports on quality and suitability of any material procured from them and their recommendations on storages/ application/ workmanship etc. for the intended use. Submission of manufacturer's test reports does not restrict Owner/ representative from asking fresh test results from an approved laboratory of the actual materials supplied even from an approved manufacturer.
- Contractor shall furnish the QAP for all supply and construction works.

5.3 Electrical

All procured items for required execution activities for electrical works should satisfy the following conditions:

- Contractor shall furnish the QAP for Panels, Cables, UPS etc. for Owner's review.
- QA Plan will commence at the instigation of the requisition and follow through to equipment acceptance thus ensuring total conformity to the specifications.
- Type test certificates of similar equipment shall be provided.
- Routine tests shall be carried out on the panels, Cables, UPS, Flame proof equipment and other items as per ISS.
- Owner/Owner's Representative reserve the right to witness routine acceptance tests at the manufacturer works as indicated in QAP & ISS.
- Owner/Owner's Representative will witness the routine tests on Panels, UPS at the manufacturer works prior to despatch, to prove compliance with specifications.
- Owner/Owner's Representative shall carry out the inspection of the erection of equipment and witness the testing & commissioning of the equipment at site and approve the test certificates.

5.4 Instrumentation

All procured items for required execution activities for Instrumentation works should satisfy the following conditions:

- Contractor shall furnish the quality assurance procedure for field instruments and cables for review of Owner/ Owner's representative.
- QAP will commence at the instigation of the requisition and follows through to equipment acceptance. Thus, ensuring total conformity to the specifications.
- Type test certificates of similar equipment shall be provided.

Copyright VCS Quality Services Private Limited – All rights reserved

- Owner/Owner's Representative shall carryout the inspection of erection of the equipment and witness the testing and commissioning and approve the certificates.

Copyright VCS Quality Services Private Limited – All rights reserved

ENERGISING QUALITY

VCS QUALITY SERVICES PVT. LTD.

STANDARD SPECIFICATION
FOR
FLAME ARRESTORS

VPC – SS – PP - 2032

00	28.01.2020	MB	MD	AD	SK
Rev. No	Date	Prepared By	Checked By	Approved By	Authorized By

UNCONTROLLED COPY	:	If printed
CONTROLLED COPY	:	If in soft and signed

Copyright VCS Quality Services Private Limited – All rights reserved

REVISION RECORD						
Rev.	**Revision Date**	**Prepared by**	**Checked by**	**Approved by**	**Authorized by**	**Revision Description**
00	28.01.2020					
		MB	MD	AD	SK	

Copyright VCS Quality Services Private Limited – All rights reserved

ABBREVIATIONS:

AARH	Arithmetic Average Roughness Height
MAWP	Maximum Allowable Working Pressure
MESG	Maximum Energy Safe Gap
NPT	National Pipe Thread

Copyright VCS Quality Services Private Limited – All rights reserved

CONTENTS

1.0 SCOPE.....4

2.0 DESIGN AND CONSTRUCTION..... 7

3.0 NAME PLATE..... 8

4.0 INSPECTION AND TESTING..... 8

5.0 SHIPPING..... 9

6.0 REJECTION.....9

Copyright VCS Quality Services Private Limited – All rights reserved

1.0 GENERAL

1.1 Scope

1.1.1 This specification, together with the datasheets covers the requirements for the design, materials, nameplate marking, inspection, testing and shipping of flame arresters.

1.1.2 The related standards referred to herein and mentioned below shall be of the latest editions prior to the date of the purchaser's enquiry: -

ASME	American Society of Mechanical Engineers	
	B 16.5	Pipe Flanges and Flanged Fittings
	B 16.20	Metallic Gaskets for Pipe Flanges- Ring Joint, Spiral Wound and Jacketed
IS/ IEC	Indian Standards/ International Electro technical Commission	
	IS/IEC 60079	Electrical Apparatus for Explosive Gas Atmosphere.
EN	European Standards	
	10204	Inspection Documents for Metallic Products.
ISO	International Organization of Standardization	
	16852	Flame arresters — Performance requirements, test methods and limits for use
API	American Petroleum Institute	
	S-2000	Venting Atmospheric and Low-Pressure Storage Tanks, Non-Refrigerated and Refrigerated

1.1.3 In the event of any conflict between this standard specifications, datasheets, statutory regulations, related standards, codes etc., the following order of priority shall govern:

a) Statutory Regulations

b) Datasheets

c) Standard Specification

d) Codes and Standards

Copyright VCS Quality Services Private Limited – All rights reserved

1.1.4 In addition to compliance to purchaser's specifications in totality, vendors extent of responsibility includes the following:

a) Purchaser datasheets specify the length of pipe from source of ignition to flame arrester and combustion processes for which flash back safety is required. Vendor shall be responsible for selecting the proper type of flame arrester based on the piping

b) configuration indicated. Purchaser's datasheets may specify the type and size of the flame arrester. However, vendor shall be responsible for proper selection of the flame arresters of suitable type and size as per the breathing rates, differential pressure, maximum operating pressure / vacuum and maximum operating temperature indicated in the purchaser's datasheets based on the type test certification of the offered model of flame arrester for the specific combustion process.

c) Purchaser's datasheets specify the material for the body, internals and other parts of the flame arrester. Alternate superior material of construction shall also be acceptable provided vendor assumes complete responsibility for the selected materials for their compatibility with the process fluid and its operating conditions.

1.2 Bids

1.2.1 Vendor's quotation shall be strictly as per the bidding instructions to vendor attached with the material requisition Vendor's quotation shall be strictly as per the bidding instructions to vendor attached with the material requisition.

1.2.2 Vendor's quotation shall include the following:

a) Detailed specification sheet for each item which shall provide information regarding size, type and material of construction. The material specifications and units of measurement for various items in vendor's specification sheets shall be to the same standards as those indicated in purchaser's datasheet.

b) Sizing calculations and / or flow versus differential pressure graph for each flame arrester tag number wise.

c) Capacity data for the type of flame arrester selected. These data shall be presented as per clause 1.7.2 of API S-2000 with the following exceptions:

I. Air flow shall be presented in m3/h (Standard) (i.e. at the reference of 15°C and 1.013 bar absolute pressure).

II. Pressure and vacuum shall be expressed in mm of water.

d) The capacity calculations/curves for the combination whenever flame arrester is specified together with breather valve or atmospheric vent.

Copyright VCS Quality Services Private Limited – All rights reserved

e) Proven references for each offered model number inline with clause 1.2.3 of this specification, whenever specifically indicated in purchaser's specifications.

f) Deviations on technical requirements shall not be entertained. In case vendor has any valid technical reason, they must include a list of deviations tag number wise summing up all the deviations from the purchaser's datasheets and other technical specifications along with the technical reasons for each of these deviations.

g) Catalogues giving detailed technical specifications, certified capacity curves / data covered, model decoding details and other related information for each type of flame arrester covered in the bid.

h) Two years operational spares for each flame arrester and its accessories, which shall include gasket, o-ring, flame arrester element etc. as a minimum.

i) Any special tools and tackles needed for maintenance work on the flame arrester and its accessories. In case no special tools are necessary for the offered target flow meters, vendor must certify in their offer.

1.2.3 All items, as offered, shall be field proven and should have completed trouble free satisfactory operation for a period of minimum 4000 hours on the bid due date in the similar application with process conditions similar to those as specified in the purchaser's datasheet. Items with proto-type design or items not meeting provenness criteria specified above shall not be offered.

1.2.4 All documentation submitted by the vendor including their quotation, catalogues, drawings, design manuals and operation and maintenance manuals shall be in English language only.

1.3 Drawings and Data

1.3.1 Detailed drawings, data, catalogues and manuals required from the vendor are indicated by the purchaser in vendor data requirement sheets. The required number of prints and soft copies should be dispatched to the address mentioned, adhering to the time limits indicated.

1.3.2 Final documentation consisting of design data, installation manual, operation and maintenance manual submitted by vendor after placement of purchase order shall include the following, as a minimum:

a) Specification sheet for each flame arrester and its accessories along with design criteria, basis of selection and sizing sheet (with or without combination of other tank protection devices as applicable).

b) Certified drawings for each flame arrester and its accessories, which shall provide dimensional details, internal constructional details with part numbers/part description

Copyright VCS Quality Services Private Limited – All rights reserved

and material of construction etc.

c) Copy of type test certificate for specified gas group and capacity.

d) Test certificates for all the test carried out as per clause 4.0 of this specification.

e) Installation procedure for flame arrester and its accessories with or without other tank protection devices.

f) Maintenance procedure for flame arresters and its accessories including removal of flame arrester bank and its cleaning procedure.

2.0 DESIGN AND CONSTRUCTION

2.1 The design of flame arrester shall be as per IS016852 standards in general**.**

2.2 Design by other standards shall also be acceptable provided these exceed the requirements specified in IS016852 standards. The design of the flame arrestor shall be selected by vendor to prevent flame break-through under process conditions specified in the respective datasheets and provide maximum safety in case of deflagration (explosion) and detonation. In general following shall apply**:**

a) All ends of the line flame arrestors shall be deflagration type suitable for continuous burning situation. A temperature sensor (K-type thermocouple) shall be provided in the flame arrester body to detect long burning situation.

b) For all inline applications, vendor shall evaluate each installation to select proper type of flame arrestor.

c) Inline flame arresters where source of ignition is always present like burners / heaters shall always incorporate a temperature sensor (K-type thermocouple) in the flame arrester body to indicate occurrence of continuous burning.

2.3 All flame arrestor body shall be of non-fragmentation type design and shall withstand the resultant pressure and temperature resulted out of detonation, deflagration or continuous burning depending upon the type of flame arrester selected.

2.4 All flame arresters in Inline application shall have a multiple flame arrester elements design with minimum two flame arresting banks covered by metal side plates. The gap between the banks shall be sized by the vendor to provide minimal pressure loss but with maximum safety.

2.5 Unless otherwise specified in datasheet, the flame arrester element material shall be 316 Stainless Steel, as a minimum. The element shall be manufactured with width of the passage way determined based on the MESG of the Gas group specified in the datasheet. Vendor shall ensure that the net free area available for flow through the flame arrester element shall be greater than the corresponding area of the connecting pipe size.

Copyright VCS Quality Services Private Limited – All rights reserved

However, the actual element design and size shall be worked out by the vendor based on process data specified in the datasheet.

2.6 The design shall ensure minimal pressure drop across the flame arrester, which shall not exceed the pressure drop indicated in the datasheets or 10% of the inlet pressure at its maximum flow whichever is lower. While considering pressure drop, vendor shall also ensure safety against deflagration and detonation.

2.7 The flame arrester banks shall be removable type to ensure inspection and cleaning of banks against clogging. The design shall allow disassembly of banks by disengaging the side plates without any special tool.

2.8 Temperature element, when required, shall be provided with weatherproof terminal box with terminals clearly identified. 1/2" NPT (F) connections shall be provided on the terminal box for purchaser's cable entry.

2.9 Flame arrester assembly shall not utilise asbestos or asbestos based gasket.

2.10 The direction of installation with side to be protected shall be clearly marked on the flam arrester body.

2.11 Unless otherwise mentioned, end connection details shall be as below: -

a) Flanged end connections shall be as per ASME B 16.5

b) Flanged face finish shall be as per ASME B 16.5. The face finish shall be as follows:

125 AARH	125 to 250	microinchAARH
63 AARH	32 to 63	microinchAARH

3.0 NAME PLATE

Each flame arrester shall have a stainless steel nameplate attached firmly to it at a visible place, furnishing the following information:

a) Tag number as per purchaser's datasheet.

b) Manufacturers serial number or model number.

c) Type of flame arrester

d) Gas group for which the flame arrester is certified.

e) Manufacturer's name/trade mark.

f) Capacity in Standard m 3/h of free air.

4.0 INSPECTION AND TESTING

Purchaser reserves the right to inspect and witness testing at vendor's works as per Inspection Test Plan. All these tests shall be completed by the vendor and test reports shall be submitted

Copyright VCS Quality Services Private Limited – All rights reserved

to Purchaser for scrutiny.

5.0 SHIPPING

5.1 All flanged openings shall be suitably protected to prevent entry of foreign material.

6.0 REJECTION

6.1 Vendor shall prepare their offer strictly as per clause 1.2 of this specification and attach only those documents, which are specifically indicated in the material requisition.

6.2 Any offer not conforming to the above requirements, shall be summarily rejected.

Copyright VCS Quality Services Private Limited – All rights reserved

ENERGISING QUALITY

VCS Quality Services Pvt. Ltd.

STANDARD SPECIFICATION

FOR
INSPECTION, FLUSHING & TESTING
OF PIPING SYSTEM

VPC – SS – PP - 2501

01	27.01.2022	SR	MC	HK	GW
Rev. No	Date	Prepared By	Checked By	Approved By	Authorized By

UNCONTROLLED COPY	:	If printed
CONTROLLED COPY	:	If in soft and signed

Copyright VCS Quality Services Private Limited – All rights reserved

REVISION RECORD						
Rev.	**Revision Date**	**Prepared by**	**Checked by**	**Approved by**	**Authorized by**	**Revision Description**
00	12.10.2019					
		MB	AK	AD	SK	
01	27.01.2022					VCS QMS Integration
		SR	MC	HK	GW	

Copyright VCS Quality Services Private Limited– All rights reserved

ABBREVIATIONS:

ASME	American Society of Mechanical Engineers
ASTM	American Society of Testing of Materials
API	American Petroleum Institute
LPG	Liquefied Petroleum Gas

Copyright VCS Quality Services Private Limited– All rights reserved

CONTENTS

1.0 SCOPE 4

2.0 REFERENCE CODES, STANDARDS AND SPECIFICATIONS 4

3.0 INSPECTION 4

4.0 FLUSHING 4

5.0 EXTENT OF TESTING 5

Copyright VCS Quality Services Private Limited– All rights reserved

1.0 SCOPE

This specification covers the general requirements for inspection, flushing and testing of piping systems.
Flushing and testing of all piping systems shall be witnessed by the Company Representative.

2.0 REFERENCE CODES, STANDARDS AND SPECIFICATIONS

Reference has been made in this specification to the latest edition (edition in force at the time of floating the enquiry) of the following codes.

AMERICAN SOCIETY OF MECHANICAL ENGINEERS (ASME)

B31.4	:	Pipeline Transportation system for liquids and Slurries
B31.8	:	Gas Transmission and Distribution Piping Systems.
B31.3	:	Process piping

3.0 INSPECTION

During various stages and after completion of fabrication and erection, the piping system shall be inspected by the Company representative to ensure that:

- Proper piping material has been used.
- Piping has been erected as per drawings and instructions.
- All supports have been installed correctly.
- Test preparations mentioned in this specification have been carried out.

4.0 FLUSHING

Flushing of all lines shall be done before pressure testing.

Flushing shall be done by `fresh potable water' or by dry compressed air wherever water flushing is not desirable to clean the pipe of all dirt, debris or loose foreign material. Required pressure for water flushing shall meet the fire hydrant pressure or utility water pressure. For air flushing, the line/ system shall be pressurized by compressed air at the required pressure which shall be 50 psi maximum. The pressure shall then be released by quick opening of a valve, already in line or installed temporarily for this purpose. This procedure shall be repeated as many times as required till the inside of the pipe is fully cleaned.

In line instruments like control valves, orifice plates, rotameters, safety valves and other instruments like thermowells which may interfere with flushing shall not be included in flushing circuit.

The screens/ meshes shall be removed from all permanent strainers before flushing. Screens/ meshes shall be reinstalled after flushing but before testing.

During flushing temporary strainers shall be retained. These shall be removed, cleaned and reinstalled after flushing, but, before testing.

In case any equipment such as Filter, Scrubbers column, vessel etc. form part of a piping

Copyright VCS Quality Services Private Limited– All rights reserved

circuit during flushing, this shall be done with the approval of Company representative. However, equipments thus included in the circuit shall be completely drained and dried with compressed air after flushing is completed.

During flushing discharged water/ air shall be drained to the place directed by the Company representative. If necessary, proper temporary drainage shall be provided by the contractor.

Care shall be taken during flushing so as not to damage/ spoil work of other agencies. Precautions shall also be taken to prevent entry of water/ foreign matter into equipments, electric motors, instruments, electrical installations etc. in the vicinity of lines being flushed.

The contractor shall carry out all the activities required before, during and after the flushing operation, arising because of flushing requirements, such as but not limited to the following:

Dropping of valves, specials, distance pieces, inline instruments and any other piping part before flushing. The flanges to be disengaged for this purpose shall be envisaged by the contractor and approved by the Company representative. These flanges shall be provided with temporary gaskets at the time of flushing.

After flushing is completed and approved, the valve distance pieces, piping specials etc. shall be reinstalled by the contractor with permanent gaskets. However, flanges at equipment nozzles and other places where isolation is required during testing, only temporary gaskets shall be provided.

5.0 EXTENT OF TESTING

With the exclusion of instrumentation, piping systems fabricated or assembled in the field shall be tested irrespective of whether or not they have been pressure tested prior to site welding or fabrication.

To facilitate the testing of piping systems, vessels and other equipments may be included in the system with the prior approval of Company representative if the test pressure specified is equal to or less than that for the vessels and other equipments.

Pumps, compressors and other rotary equipments shall not be subjected to field test pressure.

Lines which are directly open to atmosphere such as vents, drains, safety valves discharge need not be tested, but all joints shall be visually inspected. Wherever necessary, such lines shall be tested by continuous flow of fluid to eliminate the possibility of blockage. However, such lines if provided with block valve shall be pressure tested up to the last block valve.

Seats of all valves shall not be subjected to a pressure in excess of the maximum cold working pressure of the valve. Test pressure applied to valves shall not be greater than the manufacturer's recommendation nor less than that required by the applicable code. Where allowable seat pressure is less than test pressure, test shall be made through an open valve.

Copyright VCS Quality Services Private Limited– All rights reserved

Instruments in the system to be tested shall be excluded from the test by isolation or removals, unless approved otherwise by the Company representative. Restrictions which interfere with filling, venting, draining such 'as orifice plates etc. shall not be installed unless testing is complete.

Control valves shall not be included in the test system. Where bypasses are provided test shall be performed through the bypass and/ or necessary spool shall be used in place of the control valve.

Pressure gauges which are part of the finished system, but cannot withstand test pressure shall not be installed until the system has been tested. Where piping systems to be tested are directly connected at the battery limits to piping for which the responsibility-rests with other agencies, the piping to be tested shall be isolated from such piping by physical disconnection such as valve or blinds.

5.1 GENERAL REQUIREMENTS / TEST-PREPARATION FOR TESTING

Testing shall be carried out with permanent gaskets installed unless specified otherwise or instructed by the Company representative.

No pressure test shall be carried out against closed valve unless approved by the Company representative.

The Company representative shall be notified in advance by the Contractor, of the testing sequence and programme, to enable him to be present for witnessing the test.

Before testing, all piping shall be cleaned by flushing to make it free from dirt, loose scale, debris and other loose foreign materials.

All piping systems to be hydrostatically tested shall be vented at the high points and the systems purged of air before the test pressure is applied.

Wherever in the line any void exists due to any reasons, like absence of control valves, safety valves, check valves etc. it shall be fitted with temporary spools.

All joints welded, screwed or flanged shall be left exposed for examination during the test. Before pressurizing the lines, each weld joint shall be cleaned by wire brush to free it from -rust and any other foreign matter.

Where a system is to be isolated at a pair of companion flanges, a blank shall be inserted between the companion flanges. Minimum thickness of the blank shall be designed in accordance with applicable design code.

Open ends of piping system where blanks cannot be used, such as pumps, compressors, turbines or wherever equipment or pipe spools have been recovered or disconnected prior to hydrostatic testing, shall be blinded off by using standard blind flanges of same rating as the piping system being tested.

Pressure gauges used in testing shall be installed as close as possible to the lowest point in the piping system to be tested, to avoid overstressing of any of the lower portions of the system.

For longer lines and vertical lines, two or more pressure gauges shall be installed at

Copyright VCS Quality Services Private Limited– All rights reserved

locations decided by the Company representative.

For lines containing check valves any of the following alternatives shall be adopted for pressure testing:

- Whenever possible pressurize up-stream side of valve.
- Replace the valve by a temporary spool and reinstall the valve after testing.
- Provide blind on valve flanges and test the upstream and downstream of the line separately and remove the blind after testing. At these flanges, temporary gaskets shall be provided during testing and shall be replaced by-permanent gaskets subsequently.

- For check valves in lines 1 1/2" and below flapper or seat shall be removed during testing (if possible). After completion of testing the flapper/ seat shall be refitted.

Gas lines when hydrostatically tested shall be provided with additional temporary supports during testing as directed by the Company representative.

Piping which is spring or counter-weight supported shall be temporarily supported, where the weight of the fluid would overload the support. Retaining pins for spring supports shall be removed only after testing is completed and test fluid is completely drained.

When testing any piping system, air or steam of approximately 2 kg/ cm^2g may be used as preliminary test to detect missing gaskets etc. as this avoids the necessity of draining the line to make repairs. However, steam shall not be used for this purpose, if the steam temperature is more than the design temperature of the line.

For jacketed pipes testing of core pipes shall be done on individual pieces where the pipe is continuously jacketed, before it is jacketed. The outer jacket shall be tested separately as a system. For piping with discontinuous jacketing the core pipe and the jacket shall be tested as separate continuous systems.

5.2 TESTING MEDIA, TEST PRESSURE AND TEST PRESSURE GAUGES

5.2.1 TESTING MEDIA

In general all pressure tests shall be hydrostatic using iron free water, which is clean and free of silt. Maximum chloride content in water for hydrostatic testing for SS piping shall be 15-20 ppm.

Air shall be used for testing only if water would cause corrosion of the system or overloading of supports etc. in special cases as directed by Company representative.

If operating fluid in the line is much lighter than testing fluid, the additional weight of testing fluid may render piping supports (as designed) inadequate. This will call for additional temporary supports. The typical examples are flare and vapour lines. It is
preferable that hydrostatic testing is avoided in such systems and instead pneumatic testing may be specified.

Where air/ water tests are undesirable, substitute fluids such as gas oil, kerosene,

Copyright VCS Quality Services Private Limited– All rights reserved

methanol etc. shall be used as the testing medium, with due consideration to the hazards involved. These test fluids shall be specified in the line list given to the contractor.

5.2.2 TEST PRESSURE

The hydrostatic/ pneumatic test .pressure shall be as indicated in the line list or as per the instruction of Company representative.
The selection of the piping system for one individual test shall be based on the following:

- Test pressure required as per line list. Maximum allowable pressure for the material of construction of piping.
- Depending upon the above-requirements and based on construction progress, maximum length of piping shall be included in each test.

5.2.3 TEST PRESSURE GAUGE

All gauges used for field, testing shall have suitable range so that the test pressure of various systems falls in 35% to 65% of gauge scale range. Pressure gage dial shall be minimum of 150 mm. Size of Bourdon shall not be less than 75% of nominal diameter of dial range. Gauge shall be of a good quality and in first class working condition.
Prior to the start of any test or periodically during the field test programme, all test gauges shall be calibrated using a standard dead weight gauge tester or other suitable approved testing apparatus. Any gauge showing an incorrect zero reading or error of more than ± 2% of full scale range shall be discarded. The Company representative shall check the accuracy of master pressure gauge used for calibration. Calibration certificate shall be furnished for the pressure gauges.

5.3 TESTING PROCEDURE

5.3.1 HYDROSTATIC TEST

All vents and other connections used as vents shall be left open while filling the line with test fluid for complete removal of air. In all lines for pressurizing and depressurizing the system, temporary isolation valves shall be provided if valved vents, drains do not exist in the system.
Pressure shall be applied only after the system/ line is ready and approved by the Company representative.
Pressure shall be applied by means of a suitable test pump or other-pressure source which shall be isolated from the system as soon as test pressure is reached and stabilized in the system.
A pressure gauge shall be provided at the pump discharge for guidance in bringing the system to the required pressure.
The pump shall be attended constantly during the test by an authorized person. The pump shall be isolated from the system whenever the pump is to be left unattended.
Test pressure shall be maintained for a sufficient length of time to permit thorough

Copyright VCS Quality Services Private Limited– All rights reserved

inspection of all joints for leakage or signs of failure. Any joint found leaking during a pressure test shall be retested to the specified pressure after repair. Test period shall be maintained for a minimum of four hours.
The pump and the piping system to be tested are to be provided with separate pressure indicating test gauges.
Care shall be taken to avoid increase in the pressure due to temperature variation during the test.

5.3.2 PNEUMATIC TEST

When testing with air, pressure shall be supplied by means of a compressor. The compressor shall be portable type with a receiver, after cooler and oil separator.
Piping to be tested by air shall have joints covered with a soap and water solution so that the joints can be examined for leaks.
All other details shall be same as per hydrostatic testing procedure (specified above).

5.4 COMPLETION OF TESTING

After the hydrostatic test has been completed, pressure shall be released by opening the vents, in a manner and at a rate so as not to endanger personnel or damage equipments.
All vents shall be opened before the system is to be drained and shall remain open till all draining is complete, so as to prevent formation of vacuum in the system. After draining, lines/ systems shall be dried by air. In services like dry air, ethylene etc., small traces of water can cause problem. For such lines hot air drying is to be done after hydro test.
After testing is completed the test blinds shall be removed and equipment/ piping isolated during testing shall be connected using the specified gaskets, bolts and nuts. These connections shall be checked for tightness in subsequent pneumatic tests to be carried out by the contractor for complete loop/ circuit including equipments (except rotary equipments).
Pressure test shall be considered complete only after approved by the Company representative. Defects, if any, noticed during testing shall be rectified immediately and retesting of the system/ line shall be done by the contractor at his cost.

5.5 TEST RECORDS

Records in triplicate shall be prepared and submitted by the contractor for each piping system, for the pressure test done in the Performa provided/ approved by the Company representative.

Copyright VCS Quality Services Private Limited– All rights reserved

ENERGISING QUALITY

VCS QUALITY SERVICES PVT. LTD.

STANDARD SPECIFICATION
FOR
PAINTING

VPC – SS – PP - 2502

Rev. No	Date	Prepared By	Checked By	Approved By	Authorized By
03	28.01.2020	MB	AK	AD	SK
02	19.02.2018	ADE	RNR	AD	SK
01	15.05.2017	ADE	RNR	AD	SK

UNCONTROLLED COPY	:	If printed
CONTROLLED COPY	:	If in soft and signed

Copyright VCS Quality Services Private Limited – All rights reserved

REVISION RECORD						
Rev.	**Revision Date**	**Prepared by**	**Checked by**	**Approved by**	**Authorized by**	**Revision Description**
00	15.05.2017					
		AS	SM	AD	SK	
01	09.02.2018					
		ADE	RNR	AD	SK	
02	10.04.2018					
		ADE	RNR	AD	SK	
03	28.01.2020					Format change. Doc Number Change from SS-PI-008 to VPC-SS-PP-2502
		MB	AK	AD	SK	

Copyright VCS Quality Services Private Limited – All rights reserved

CONTENTS

1.0 GENERAL 2

2.0 CODES & STANDARDS 4

3.0 CONDITIONS OF DELIVERY 6

4.0 COMPOSITION OF THE PAINT PRODUCTS USED 6

5.0 IDENTIFICATION 7

6.0 SURFACE PREPARATION STANDARDS 8

7.0 PREPARATION OF THE SURFACES 9

8.0 METALLISATION 16

9.0 CARRYING OUT THE PAINTWORK 16

 Copyright VCS Quality Services Private Limited – All rights reserved

1.0 GENERAL

1.1 This technical specification shall be applicable for the work covered by the contract, and without prejudice to the provisions of various codes of practice, standard specifications etc. It is understood that contractor shall carry out the work in all respects with the best quality of materials and workmanship and in accordance with the best engineering practice and instructions of Engineer-In-Charge.

Wherever it is stated in the specification that a specific material is to be supplied or a specific work is to be done, it shall be deemed that the same shall be supplied or carried out by the contractor. Any deviation from this standard without written deviation permit from appropriate authority will result in rejection of job.

1.2 SCOPE

1.2.1 Scope of work covered in the specification shall include, without being limited to the following.

1.2.2 This specification defines the requirements for surface preparation, selection and application of primers and paints on external surfaces of equipment, vessels, machinery, piping, ducts, steel structures, external & internal protection of storage tanks for all services, MS Chimney without Refractory lining and Flare lines etc. The items listed in the heading of tables of paint systems is indicative only, however, the contractor is fully responsible for carrying out all the necessary painting, coating and lining on external and internal surfaces as per the tender requirement.

1.2.3 Extent of Work

1.2.3.1 The following surfaces and materials shall require shop, pre-erection and field painting:

a. All un-insulated C.S. & A.S. equipment like columns, vessels, drums, storage tanks (both external & internal surfaces), heat exchangers, pumps, compressors, electrical panels and motors etc.

b. All un-insulated carbon and low alloy piping, fittings and valves (including painting of identification marks), furnace ducts and stacks.

c. All items contained in a package unit as necessary.

d. All structural steel work, pipe, structural steel supports, walkways, handrails, ladders, platforms etc.

e. Flare lines, external surfaces of MS chimney with or without refractory lining and internal surfaces of MS chimney without refractory lining.

 Copyright VCS Quality Services Private Limited – All rights reserved

f. Identification colour bands on all piping as required including insulated aluminium clad, galvanised, SS and nonferrous piping.

g. Identification lettering/numbering on all painted surfaces of equipment/piping insulated aluminium clad, galvanized, SS and non-ferrous piping.

h. Marking / identification signs on painted surfaces of equipment/piping including hazardous service.

i. Supply of all primers, paints and all other materials required for painting (other than Owner supplied materials)

j. Over insulation surface of equipments and pipes wherever required.

k. Painting under insulation for carbon steel, alloy steel and stainless steel as specified.

l. Painting of pre-erection/fabrication and Shop primer.

m. Repair work of damaged pre-erection/fabrication and shop primer and weld joints in the field/site before and after erection as required.

n. All CS Piping, equipments, storage tanks and internal surfaces of RCC tanks in ETP plant.

1.2.3.2 The following surfaces and materials shall not require painting in general. However, if there is any specific requirement by the owner, the same shall be painted as per the relevant specifications:

a. Un-insulated austenitic stainless steel.
b. Plastic and/or plastic-coated materials
c. Non-ferrous materials like aluminum.

1.2.4 Documents

1.2.4.1 The contractor shall perform the work in accordance with the following documents issued to him for execution of work.

a. Bill of quantities for piping, equipment, machinery and structures etc.
b. Piping Line List.
e. Painting specifications including special civil defence requirements.

1.2.5 Unless otherwise instructed, final painting on pre-erection/ shop primed pipes and equipments shall be painted in the field, only after the mechanical completion, testing on systems are completed as well as after completion of steam purging wherever required.

 Copyright VCS Quality Services Private Limited – All rights reserved

1.2.6 Changes and deviations required for any specific job due to clients requirement or otherwise shall be referred to VCS for deviation permit.

2.0 CODES & STANDARDS

Without prejudice to the specifications of the contract, the following codes and standards shall be followed for the work covered by this contract.

IS: 5 Colors for ready mixed paints and enamels.

RAL DUTCH International Standard for colour shade (Dutch Standard)

IS: 101 Methods of test for ready mixed paints and enamels,

IS: 161 Heat resistant paints.

IS: 2074 Specifications for ready mixed paint, red oxide zinc chrome priming.

IS: 2379 Color code for identification of pipelines.

IS: 2932 Specification for enamel, synthetic, exterior (a) undercoating. (b) Finishing.

3.0 CONDITIONS OF DELIVERY

Packaging

Every recipient will be fitted with a hermetically-sealed lid with an opening that is sufficiently large to allow the contents to be stirred: the outside and inside are protected against oxidation, and, the lid, are marked with a strip of color identical to the contents.

4.0 COMPOSITION OF THE PAINT PRODUCTS USED

a) Quality

The composition and quality of the products may not differ from batch to batch. A batch is all of the products of a specified manufacture. If the analyses of products bring to light that the composition does not conform to the specifications of the paint manufacturer, the OWNER may refuse to use this batch of products. The paint products must comply with the following conditions

- They must have the viscosity necessary for the described use and the established condition: use of the brush - paint roller (spray gun only

 Copyright VCS Quality Services Private Limited – All rights reserved

for special cases and in the workshop)

b) Quality control - Sampling

While the works are in progress on the construction site, the OWNER may carry out sampling on the paint being used for the purpose of checking conformity. The paint products must be made available free of charge to the laboratory or the approved supervisory body in sufficient quantities so that all the tests can be carried out on the same batch.

If analyses reveal a non-conformity in the composition of the products used (tolerance of ± 3 % of the dosage of every component), the OWNER may refuse application of the product under consideration, halt the work and have the nonconforming product already applied removed.

Before proceeding the work, a product that does conform will be required. The only Purpose of the analysis is to reveal any nonconformity of the composition of the products. Their purpose is therefore not to assess the quality of the different components. The analyses concerned are not acceptance tests of the products supplied and in no way affect the obligations of the contractor specified in the contract towards the OWNER.

5.0 IDENTIFICATION

Every recipient will bear the following information:

- Name of the manufacturer
- Date and number of manufacture
- Name of the product type
- Batch no
- Net weight of the produced or the contents of the recipient
- Date of the expiry.

At the time of delivery, this packaging must bear labels in conformity with the legal stipulations in force.

Leaving the site after work

After completion of a job a general clean-up shall be carried out by the Contractor to remove all debris, materials or irregularities that his work has brought to the site so that it is left tidy:

The restoration work includes among other things:

 Copyright VCS Quality Services Private Limited – All rights reserved

- The removal of abrasives.
- The removal of the different protective coverings.
- The Contractor will make the required repairs to any damage after refitting the supports.
- The removal of paint and cleaning of the stains on the floor.

6.0 SURFACE PREPARATION STANDARDS

Following latest edition of standards shall be followed for surface preparations:

1. Swedish Standard Institution- SIS-05 5900-1967/ISO 8501-1
2. Steel Structures Painting Council, U.S.A. (Surface Preparation Specifications (SSPC-SP)
3. British Standards Institution (Surface Finish of Blast-cleaned for Painting) BS-4232.
4. National Association of Corrosion Engineers. U.S.A. (NACE).
5. IS-1477-1971 (Part-1) - Code of Practice for Painting of Ferrous metals in Buildings. (Part 1, Pre-treatment)

a) The contractor shall arrange, at his own cost to keep a set of latest edition of above standards and codes at site.

b) The paint manufacturer's instruction shall be followed as far as practicable at all times. Particular attention shall be paid to the following:

- Proper storage to avoid exposure as well as extremes of temperature.
- Surface preparation prior to painting.
- Mixing and thinning.
- Application of paints and the recommended limit on time intervals between coats.

c) Any painting work (including surface preparation) on piping or equipment shall be commenced only after the system tests have been completed and clearance for taking up painting work is given by the OWNER, who may, however, at his discretion authorize in writing, the taking up of surface preparation or painting work in any specific location, even prior to completion of system test.

Copyright VCS Quality Services Private Limited – All rights reserved

7.0 PREPARATION OF THE SURFACES

7.1 General Specifications

The cases that occur in practice on building sites, with regard to painted surfaces, can be broken down as follows:

- Material of which the oxide content disappears by natural oxidation.
- Material that has already been covered with a layer of paint in the workshop.
- Material that is covered with old paint layers that show different degrees of weathering.

Good preparation of surface is the best guarantee for good anti-corrosion protection.

Paintwork may never begin until the surface to be treated is dry and is independent of the base coat and cleared of dirt, dust, rust, scale, grease, salt attack, cement powder, cement mud-scale, sand, oil, etc.

Based on the environmental conditions of coastal and saline nature, the Painting specification for station pipes defines the complete requirements like:

- Surface preparation standards like NACE etc.
- Sand blasting process
- Color Codes for piping
- Paint materials types and their DFT measurement.
- Selection and application of paints on external surfaces.

The pipeline passes through the coastal and marine environment, the **Table-4** of this specification to be followed for the painting works.

The method of preparation of the surface will be implemented in accordance with the preparation methods described below:

- Bright blast-cleaning
- Mechanical or Power tool cleaning
- Manual or hand tool cleaning

The Contractor should have the required material at his disposal to clean the surfaces to be coated thoroughly in accordance with the preparation methods regardless of the form or the condition of such surfaces. The cleaning devices that might be damaged during the surface preparation shall be screened off by the Contractor.

7.2 Air blast cleaning with abrasive

Before beginning cleaning by blasting, the person carrying out the work will take the following measures:

 Copyright VCS Quality Services Private Limited – All rights reserved

- Clear the steel surface of oil and/or grease;
- Ensure that each flange collar (section where the sealing is applied) is properly screened off against the blasting and the subsequent works;
- Check that no blasting grains can act into the pipes during this process. Any openings not sealed off must be screened off;
- Where there are valves, regulators and other devices, the manufacturer's identification plate will be dismantled so that all surfaces can be treated. The plate will then be put back again.
- Screen off all non-metal structures such as rubber where there is a filter;
- With valves, operators and other devices, care should be taken to ensure that no metal filings or paint get into the apparatus:
- The OWNER reserves the right to carry out part or all of these works himself.

To prevent rust forming quickly as the result of humidity on the blasted surface, cleaning by blasting may only be carried out when the temperature of the steel surface is at least 3°C higher than the dew-point of the ambient air.

Blasting may not be carried out if the relative degree of humidity exceeds 80%. The choice of the type of blasting medium used depends on local circumstances such as the possible presence of gas and the material to be blasted.

The abrasive to be used must conform to the local law i.e. it may contain no carbon and less than 1% free silicon dioxide. The Sa 3 will always be requested and must at least reach Sa 2½ during the initial stage of the paintwork. For blasting followed by metallization, the surface preparation degree to be achieved is always Sa 3. The degree of cleanliness to be obtained will be inspected in accordance with the Swedish standard SVENSK STANDARD ISO 8501-1-1988 SIS 05.5900.

- Sa 3: surface blasted down to the bare metal; when the surface is inspected with a magnifying glass, scale, rust and foreign bodies must be completely removed and it should be possible to raise a metallic -shine on the treated surface.

- Sa 2 1/2: blasted very carefully. Scale, rust and foreign bodies must be removed in such a way that anything left behind will only be visible as nuances (shading) or strips.

The blast-cleaning will be carried out by means of compressed air free of water and oil.

After the blasting and before painting, the surface should be completely cleaned of blasting material and so forth with a soft brush, a dry cloth or dry compressed air.

7.3 Mechanical or Power tool cleaning

If sandblasting is not permitted or if the metal structures are not easily accessible for blasting or blasting for one reason or other is technically unfeasible, mechanical de

 Copyright VCS Quality Services Private Limited – All rights reserved

rusting can be used instead. With mechanical cleaning by means of chipping, rotating steel brushes and sanding discs, a degree of cleanliness St. 3 should be reached.

St 3 : removal of the old paint layers of which the adhesion leaves something to be desired and/or of which the paint layer no longer fulfills the requirements.

If parts are present that are so corroded that St 3 is difficult to achieve, this should be notified to the OWNER representative prior to the start of the works.

N.B:
St. 3 : means removal of every old paint layer. Retouching means local polishing with St. 3 or Sa 3 followed by application of the desired painting system.

After mechanical cleaning, the surface should be made dust-flee with a cloth or a so brush, washed with an organic solvent and thoroughly dried off with a dry cloth (e.g. with 1.1.1. Trichoroethane such as Solvethane, Chloroethene).

7.4 Manual or Hand tool cleaning

Manual derusting with the aid of scrapers. steel brushes, sandpaper etc. shall only be permitted in exceptional cases for local repairs. Any deviation there from must be requested from the OWNER/ OWNER 's Representative.

With manual derusting, a surface preparation degree St 3 must be obtained. The length of the handles of the equipment used may not exceed 50 cm.

7.5 Preparation of a surface covered with a layer of paint in the workshop.

This layer is in general applied by the manufacturer, for example, on valves, regulators etc. Layers of this kind will be checked for their proper adhesion in accordance with ASTM D 3359, method A (Standard Test Method for measuring adhesion by tape test). The adhesion should be at least.

If the paint layer shows less adhesion or is incompatible with the rest of the system it should be completely removed. If the paint layer is not removed, the Contractor accepts it in the state in which the coating is found and the guarantee remains in force. The adhesion does not have to be examined if system 63 has already been applied in the workshop on behalf of the OWNER.

The Contractor, who must provide for the protection on the construction site, must therefore obtain the information regarding the treatment of the surface and the quality of the paint that was used and must, moreover, examine the adhesion of the layer on the construction site, the percentage of damage and weathering as well as the value of the preparation of the surface in the workshop together with the thickness thereof that must be supplemented if necessary.

 Copyright VCS Quality Services Private Limited – All rights reserved

a) Galvanized surface

Galvanized surfaces, both old and new will be carefully roughened up. Every foreign body (concrete splatters, chalk marks, grease and oil stains, etc.) will be removed. Thereafter, rub the surfaces with abundant water and, if necessary, with cleaning products.

To this end, nylon brushes will be used for every kind of dirt as well as for removing zinc salt residue. Thereafter, the surfaces will be treated in accordance with system 21. Where the zinc layer is lacking, it will be derusted manually to a degree of cleanliness St 3, after which a primer coat will be applied in accordance with system 22.

b) Metallized surfaces treated with an impregnation layer

- Degrease with the desired degreasing product:
- Clean under high pressure or with a product prescribed by the paint supplier.

If the paint layer adheres well and is applied on a clean base, the painting system described may be continued. If the percentage of damage and weathering does not exceed 5 % m. retouching may be considered. These partial repairs will be carried out.

If on the other hand, the percentage of damage does exceed 5 %/m or if the layer applied in the workshop comes loose the Contractor must draw the attention of the OWNER to this and carry out the complete application system.

7.6 Preparation of surfaces covered with earlier paint layers that show different degrees of weathering.

If the surfaces do not show deep weathering limited to the spread of rust by small pitted areas or non-penetrative rust in spots, it will very often be sufficient to clean the surfaces with abrasives or with an abrasive disc, then to rub them down with steel wool, remove the dust and wash off. If thick rust appears, in spots, scale rust and active rust canker, this should be removed with needle hammers or stripped away directly by blasting, removing the dust and washing off.

7.7 Preparation of concrete or cement plaster surfaces

Remove unsound paint layers and loose components with scrapers, blades or rotating steel brushes. Thoroughly clean the entire surface with water containing ammonia. Thoroughly remove moss, algae and fungal growths. Where these growths have been removed, treat the area with a fungicide in accordance with the instructions for use.

Once the entire area is completely dry, brush off the dead residue of moss, algae and fungus with a hard brush. In the case of reinforcement steel that has been laid bare, remove as rust, dust and grease as possible and treat with a printer coat. When painting

 Copyright VCS Quality Services Private Limited – All rights reserved

concrete surfaces, they must first be checked for cracks. Cracks larger than 0.3 mm must be repaired with an appropriate system in accordance with the type and extent of the repairs (e.g. injection with epoxy mortar). Repair damage such as cracks and bursts to concrete parts with a two-component mortar or preferably with micro-mortars. Finally check the alkalinity of the surface with the aid of litmus paper and neutralize it if necessary.

7.8 Use of solvents

It is sometimes necessary to use solvents when the surfaces to be painted are streaked with grease or oil. In this case a suitable organic solvent should be applied. The operation should be carried out with the aid of clean brushes or rags and clean solvent.

All the legal specifications in connection with solvents etc. must be adhered to. The OWNER/OWNER's Representative will be informed in advance of any toxicity or flammability. All measures must be taken to prevent any risk of fire and to nick out any possibility of poisoning (ventilation). The Contractor will provide drip collectors to keep the environment free of pollution.

7.9 Condition of the metal after stripping

The Contractor must call in a representative of the OWNER/OWNER's representative or of the Approved supervisory Body responsible for checking the condition of the metal during stripping and informing the OWNER/OWNER's representative immediately of any damage that he might have noticed.

- Deep corrosion of the plates - rivets - bolts
- Faulty welding
- Fittings that appear to be dangerous because of their age.

7.10 Removing coating from surface pipelines

The Contractor must have the equipment necessary for the removal of asphalt from the pipe without damaging the latter (scratching, impact, etc,). The Contractor undertakes to carry out the work in accordance with an approved procedure.

 Copyright VCS Quality Services Private Limited – All rights reserved

TABLE-1 (FOR CLAUSE 7.0)
SURFACE PREPARATION STANDARDS

SL. NO.	DESCRIPTION	VARIOUS INTERNATIONAL STANDARDS (EQUIVALENT)			REMARKS
		ISO 8501-1/ SIS-05 59 00	SSPC-SP, USA	NACE, USA	
1	Manual or hand tool cleaning Removal of loose rust, loose mill scale and loose paint, chipping, scrapping, standing and wire brushing. Surface should have a faint metallic sheen	ST.2	SSPC-SP-2	-	This method is applied when the surface is exposed to normal atmospheric conditions when other methods cannot be adopted and also for spot cleaning during maintenance painting.
2	Mechanical or power tool cleaning Removal of loose rust loose mill scale and loose paint to degree specified by power tool chipping, de-scaling, sanding, wire brushing and grinding, after removal of dust, surface should have a pronounced metallic sheen.	ST.3	SSPC-SP-3	-	
3	Dry abrasive Blast cleaning There are four common grades of blast cleaning				

Copyright VCS Quality Services Private Limited – All rights reserved

3.1	White metal Blast cleaning to white metal cleanliness. Removal of all visible rust. Mill scale, paint & foreign matter 100% cleanliness with desired surface profile.	SA 3	SSPC-SP-5	NACE#1	Where extremely clean surface can be expected for prolong life of paint system.
3.2	Near white metal Blast cleaning to near white metal cleanliness, until at least 95% of each element of surface area is free of all visible residues with desired surface profile.	SA 2½	SSPC-SP-10	NACE#2	The minimum requirement for chemically resistant paint systems such as epoxy, vinyl, polyurethane based and inorganic zinc silicate paints, also for conventional paint systems used under fairly corrosive conditions to obtain desired life of paint system.
3.3	Commercial Blast Blast cleaning until at least two-third of each element of surface area is free of all visible residues with desired surface profile.	SA 2	SSPC-SP-6	NO.3	For steel required to be painted with conventional paints for exposure to mildly corrosive atmosphere for longer life of the paint systems.
3.4	Brush-off Blast Blast cleaning to white metal cleanliness, removal of all visible rust, mill scale, paint & foreign matter. Surface profile is not so important.	SA 1	SSPC-SP-7	NO.4	

Copyright VCS Quality Services Private Limited – All rights reserved

8.0 METALLISATION

8.1 Applying the metallization

Metallization must be carried out in accordance with ISO 2063,

Metallization is carried out as rapidly as possible after blasting in order to limit corrosion of the pipes (max. 3 hours later). With metallization, a surface preparation degree Sa 3 is compulsory. The roughness of the blasted surfaces should be from 25 to 50µ R_{Max}.

- The metallizing is always carried out on dry parts in good weather conditions (maximum relative humidity 80 %);

- For metallization, a wire composed of 85 % zinc and 15 % aluminum with a minimum guaranteed degree of purity of 99.5 % is used (subject to other specifications). The application thereof is always carried out in accordance with the conditions of the manufacturer and may at all times be submitted to the OWNER's representative.

- The sealant should be applied maximum 3 hours alter metallization.

- The sealant must be thinned and applied as per the present specifications. A visual inspection whereby the sealant completely covers the metallization will suffice here.

- When evaluating the metallization, a negative deviation from the minimum coating thickness, to 80 µ for 20% of the measurements will be permitted.

9.0 COATING PROCEDURE AND APPLICATION

9.1 Conditions for carrying out paintwork

Painting may not be carried out in unsuitable conditions.

All preparatory work and painting may only he carried out in dry weather and at a minimum temperature of 10°C, except for special eases requested by the OWNER's Representative.

Unless otherwise stipulated in the specifications of the paint supplier, application of the paint is forbidden if it is forecast that the temperature will fall to below 0°C before the paint is dry. The temperature of-the surface to be painted must be at least 3°C higher than the dew point of the ambient air. Application of the paint is also not permitted if there is a danger that the coat of paint will not be dry before dew or condensation sets in.

The work must be stopped:

 Copyright VCS Quality Services Private Limited – All rights reserved

- If the temperature of the surface to be painted is higher than that described by the supplier.

- In rain, snow, mist or fog or when the relative humidity is higher than 80 %.

Coats that have not yet dried and have been exposed to frost, mist, snow or rain and might thereby be damaged must be removed after drying and the surfaces must be repainted at the expense of the Contractor.

Working in direct sunlight or in hot weather must be avoided,

The first coat of paint must be applied maximum 3 hours after the preparation of the surface of the relative humidity of the air is between 50% and 80%. This time span may be increased to 6 hours if the relative humidity is less than 50%. In all cases, the preparation of the surface must exhibit degree Sa 3 and at the very least the appearance of degree Sa 2 ½ at the time of painting.

The coats of paint may only be applied on carefully cleaned surfaces that must be dry and free of grease and dust.

9.2 Special conditions

Painting may be carried out when the Contractor can be sure that the instructions of the paint supplier have been scrupulously followed with regard to the parameters in the following (non-exhaustive) list:

- Ambient temperature.
- Surface temperature.
- Relative humidity.
- Dew point.
- Drying times.

The Contractor must in this respect be able to produce the instructions for the paint on the site. The OWNER/CONSULTANT will guarantee 100% supervision in this regard during the execution of the work.

In addition, the paintwork may only be carried out to a minimum ambient temperature of 5°C and/or to a maximum relative degree of humidity of 85 %. Application of the paint is also not permitted if there is a danger that the coat of paint will not be dry before dew or condensation sets in.

 Copyright VCS Quality Services Private Limited – All rights reserved

10.0 PAINT MATERIAL

Manufacturers shall furnish the characteristics of all paints indicating the suitability for the required service conditions. Primer and finish coats shall be of class-I quality and shall conform to the following:

a) Primer (P-1)

Red oxide Zinc Chromate Primer

Type and Composition	Single pack, Modified phenolic alkyd medium pigmented with red oxide and zinc chromate.
Volume solids	30 - 35% (min)
DFT	25 microns/coat (min)
Covering capacity	12 - 13 M^2/Lit/coat

b) Primer (P-2)

High build chlorinated rubber zinc phosphate primer

Type and Composition	Single pack, Air Drying Chlorinated rubber medium Plasticized with unsaponifiable plasticiser pigmented with zinc phosphate
Volume solids	35 - 40% (min)
DFT	30 - 40 microns/coat (min)
Covering capacity	7 - 8 M^2/Lit/Coat

c) Primer (P-3)

High build zinc phosphate primer

Type and Composition	Single Pack, Synthetic medium, pigmented with zinc phosphate.
Volume solids	40 - 45% (min)
DFT	35 - 50 microns/coat (min)
Covering capacity	10 - 12 M^2/Lit/coat
Heat resistance	Upto 80 ºC (dry)

d) Primer (P-4)

Etch Primer / Wash Primer

Copyright VCS Quality Services Private Limited – All rights reserved

Type and Composition	Two pack Poly vinyl butyral resin medium cured with phosphoric acid solution pigmented with zinc tetroxy chromate.
Volume solids	7 - 8% (min)
DFT	8 - 10 microns/coat (min)
Covering capacity	7 - 8 M^2/lit/coat

e) Primer (P-5)

Epoxy Zinc Chromate Primer

Type and Composition	Two packs, Polyamide cured epoxy resin medium pigmented with zinc chromate.
Volume solids	40 % (min)
DFT	35 microns/coat (min)
Covering capacity	11 - 12 M^2/lit/Coat

f) Primer (P-6)

Epoxy Zinc Phosphate Primer

Type and Composition	Two packs, Polyamide cured Epoxy resin medium pigmented with zinc phosphate.
Volume solids	40% (min)
DFT	35 - 50 microns/coat (min)
Covering capacity	11 - 12 M^2/lit/coat

g) Primer (P-7)

Epoxy high build M10 Paint (Intermediate Coat)

Type and composition	two pack Poly Polyamide cured epoxy resin medium pigmented with micaceous iron oxide. Volume solids 7- 8%
Volume Solids	50% (min)
DFT	100 microns/coat (min)
Covering capacity	5.0 M^2/lit/coat

h) Primer (P-8)

Epoxy Red Oxide zinc phosphate primer

Copyright VCS Quality Services Private Limited – All rights reserved

Type and Composition	two pack. Polyamine cured epoxy resin pigmented with Red oxide and Zinc phosphate.
Volume solids	42% (min)
DFT	30 microns/coat (min)
Covering capacity	13 - 14 M^2/lit/coat

i) Primer (P-9)

Epoxy based tie coat (suitable for conventional alkyd based coating prior to application of acrylic polyurethane epoxy finishing coat)

Type and Composition	Two packs, Polyamide cured epoxy resin medium suitably pigmented.
Volume solids	50 - 60% (min)
DFT	50 microns/coat (min)
Covering capacity	10 - 12 M^2/Lit/Coat

j) Finish Coats (F-1)

Synthetic Enamel

Type and Composition	Single pack, Alkyd medium pigmented with superior quality water and weather resistant pigments
Volume solids	30 - 40% (min)
DFT	20 - 25 microns/coat
Covering capacity	16 - 18 M^2/lit/Coat

k) Finish coat (F-2)

Acrylic Polyurethane paint

Type and Composition	Two pack, Acrylic resin and iso-cyanate hardener suitably pigmented.
Volume Solids	40% (min)
DFT	30 - 40 microns / coat
Covering Capacity	10 - 12 M^2/lit/ coat

l) Finish Coat (F-3)

Chlorinated Rubber Paint

Copyright VCS Quality Services Private Limited – All rights reserved

Type and Composition	Single pack, Plasticised chlorinated rubber medium with chemical & weather resistant pigments.
Volume solids	40% (min)
DFT	30 - 40 microns/coat (min)
Covering capacity	8 - 10 M^2/lit /coat

m) Finish Coat (F-4)

High build chlorinated rubber M10 paint.

Type and Composition	Single pack Chlorinated rubber based high build pigmented with micaceous iron oxide.
Volume solids	40 - 50% (min)
DFT	65 - 75 microns/coat
Covering capacity	6.0 - 7.0 M^2/lit/coat

n) Finish coat (F-5)

Chemical Resistant Phenolic based Enamel

Type and Composition	Single pack phenolic medium suitably pigmented.
Volume solids	35 - 40% (min)
DFT	25 microns/ coat
Covering capacity	15.0 M^2/lit/coat

o) Finish Coat (F-6)

Epoxy High Building Coating

Type and Composition	Two pack. Polyamide-amine cured epoxy resin medium suitably pigmented.
Volume solids	60 - 65% (min)
DFT	100 microns/coat (min)
Covering capacity	6.0 - 6.5 M^2/lit/coat

p) Finish Coat (F-7)

High build Coal Tar Epoxy

Copyright VCS Quality Services Private Limited – All rights reserved

Type and Composition	Two pack, Polyamine cured epoxy resin blended with Coal Tar.
Volume solids	65% (min)
DFT	100 - 125 microns/coat
Covering capacity	6.0 - 6.5 M^2/lit/coat

q) Finish Coat (F-8)

Self-priming epoxy high build coating (complete rust control coating)

Type and Composition	Two packs. Polyamide-amine cured epoxy resin suitably pigmented. Capable of adhering to manually prepared surface and old coatings.
Volume solids	65 - 80% (min)
DFT	125 - 150 microns/coat
Covering capacity	4 - 5 M^2/lit/coat

r) Finish Coat (F-9)

Inorganic Zinc Silicate coating

Type and Composition	Two packs, self-cured solvent based inorganic zinc silicate coating.
Volume solids	60% (min)
DFT	65 - 75 microns/coat
Covering capacity	8 - 9 M^2/lit/coat

s) Finish coat (F-10)

High build Black

Type and Composition	Single pack. Reinforced bituminous composition phenol based resin.
Volume solids	55 - 60% (min)
DFT	100 microns/coat (min)
Covering capacity	5.5 - 6.0 M^2/lit/coat

t) Finish Coat (F-11)

Heat Resistant Aluminium Paint Suitable up to 250°C.

Copyright VCS Quality Services Private Limited – All rights reserved

Type and Composition	Duel container (paste & medium). Heat resistant spec varnish medium combined with aluminium flakes.
Volume solids	20 - 25% (min)
DFT	20 microns/coat (min)
Covering capacity	10 - 12 M^2/lit/coat

u) Finish Coat (F-12)

Heat Resistant Silicon Paint suitable up to 400º C.

Type and Composition	Single pack Silicone resin based with aluminium flakes.
Volume solids	20 - 25% (min)
DFT	20 microns/coat (min)
Covering capacity	10 - 12 M^2/lit/coat

v) Finish Coat (F-13)

Synthetic Rubber Based Aluminium Paint Suitable up to 150ºC.

Type and Composition	Single Pack, Synthetic medium rubber medium combined with leafing Aluminium,
DFT	25 microns/coat (min)
Covering capacity	9.5 M^2/lit/coat

Notes:

1 Covering capacity and DFT depends on method of application Covering capacity specified above is theoretical. Allowing the losses during application, min specified DFT should be maintained.

2. All paints shall be applied in accordance with manufacturer's instructions for surface preparation, intervals, curing and application. The surface preparation quality and workmanship should be ensured.

3. Selected chlorinated rubber paint should have resistance to corrosive atmosphere and suitable for marine environment,

4 All primers and finish coats should be cold cured and air-drying unless otherwise specified.

 Copyright VCS Quality Services Private Limited – All rights reserved

5. Technical data sheets for all paints shall be supplied at the time of submission of quotations.

6. In case of use of epoxy tie coat, manufacturer should demonstrate satisfactory test for inter coat adhesion. In case of limited availability of epoxy tie coat (P-9) alternate system may be used taking into the service requirement of the system.

7. In case of F-6, F-9, F-1 1 & F-1 2 Finish Coats, No Primer are required.

MANUFACTURERS

The paints shall conform to the specifications given above and Class-I quality in their products range of any of the-following manufacturer or other approved vendors:

i) Asian Paints (India) Ltd.
ii) Bombay Paints
iii) Berger Paints India Ltd.
iv) Akzo Nobel
v) Jenson & Nicholson
vi) Shalimar Paints

STORAGE

All paints and painting material shall be stored only in rooms to be provided by contractor and approved by OWNER/ OWNER 's Representative for the purpose. AlI necessary precautions shall be taken to prevent fire. The storage building shall preferably be separate from adjacent, building.

A signboard bearing the words given below shall be clearly displayed outside:
PAINT STORAGE No NAKED LIGHT highly -inflammable

12.0 COLOR CODE FOR PIPING:

i) For identification of pipelines, the color code as per Table -1 shall be used.

ii) The color code scheme is intended for identification of the individual group of the pipeline. The system of color coding consists of a ground color and color bands superimposed on it.

iii) Colors (Ground) as given in Table-2 shall be applied throughout the entire length of un insulated pipes, on the metal cladding & on surfaces. Ground color coating of minimum 2m length or of adequate length not to be mistaken as color band shall be applied at places requiring color bands. Color bands shall be applied as per approved procedure.

iv) Line coating shall meet DIN 30670 standard for external coating and API 5L RP – 2 for internal coating.

 Copyright VCS Quality Services Private Limited – All rights reserved

v) The thickness for the epoxy should be 180 microns, adhesive 200 microns and balance should be PE .

vi) The minimum coating thickness on weld seam shall be 3.2 mm and minimum coating thickness on body should be 3.2.

vii) Minimum thickness for liquid epoxy for internal coating should be 100 ± 20 microns.
Max design temperature for coating should be considered +80 ºC.

COLOR CODE:

A) Ball Valve (Above Ground) : Off White
B) Globe Valve (Above Ground) : Oxford Blue-RAL 5005, IS-519941005
C) Check Valve(Above Ground) : Oxford Blue-RAL 5005, IS-519941005
D) Launcher / Receiver : Yellow Golden
E) Jib Crane / Trolley : Yellow Golden
F) All underground valves shall have epoxy base coating after surface finish of SA 2:5
G) Valves and above ground pipes need to be properly blasted to achieve surface finish of Sa 2:5 before the application of paints.

Table 12.1 Colour Coding Scheme for Pipes and Equipment

SI. No.	Description	Ground Color	First Color Band	Second Color Band
1	**COMPRESSED AIR**			
a)	Plant Air	Sky Blue	Silver Grey	-
b)	Instrument Air	Sea Green	Black	-
2	**GASES**			
a)	Charge Gas	Canary Yellow	Signal Red	Smoke Grey
b)	Regeneration Gas	Canary Yellow	White	Dark Violet
c)	Residue Gas	Canary Yellow	White	French Blue
d)	LPG	Canary Yellow	Brilliant Green	White
e)	Acetylene	Canary Yellow	Dark violet	-
	Flare Lines	Heat resistant aluminium		
f)	Fire water and Foam & Extinguisher	Post office red		
3	**ALL EQUIPMENT**			
a)	Vessels. Columns, exchangers, etc. containing non- hazardous fluids.	Light Grey		
b)	Base Frame/Structure	Black		
c)	All equipment containing hazardous fluids	Canary Yellow		

Copyright VCS Quality Services Private Limited – All rights reserved

d)	Pipe carrying hazardous fluids	Bar is to be replaced by Hazardous Marking as per IS:2379 Clause 7.1C		

IDENTIFICATION SIGN

i) Colors of arrows shall be black or white and in contrast to the color on which they are superimposed.

ii) Product names shall be marked at pump inlet, outlet and battery limit in a suitable size as approved by OWNER.

iii) Size of arrow shall be either of the following:

a) Color Bands

Minimum width of color band shall be as per approved procedure.

b) Whenever it is required by the OWNER to indicate that a pipeline carries a hazardous material, a hazard marking of diagonal stripes of black and golden, yellow as per IS:2379 shall be painted on the ground color.

IDENTIFICATION OF EQUIPMENT

All equipment shall be stenciled in black or white on each vessels, column, equipment, and painting as per approved procedure.

INSPECTION AND TESTING

1. All painting materials including primers and thinners brought to site by contractor for application shall be procured directly from manufactures as per specifications and shall be accompanied by manufacturer's test certificates Paint formulations without certificates are not acceptable.

2. The painting work shall be subject to inspection by OWNER/ OWNER's Representative at all times. In particular, following stage wise inspection will be performed and contractor shall offer the work for inspection and approval at every stage before proceeding with the next stage.

In addition to above. record should include type of shop primer already applied on equipment e.g. Red oxide zinc chromate or zinc chromate or Red lead primer etc.

 Copyright VCS Quality Services Private Limited – All rights reserved

Any defect noticed during the various stages of inspection shall be rectified by the contractor to the entire satisfaction of OWNER/ OWNER's Representative before proceeding further. Irrespective of the inspection, repair and approval at intermediate stages of work. Contractor shall be responsible for making good any defects found during final inspection/guarantee period/defect liability period as defined in general condition of contract. Dry film thickness (DFT) shall be checked and recorded after application of each coat and extra coat of paint should be applied to make-up the DFT specified without any extra cost to OWNER.

PRIMER APPLICATION

i. The contractor shall provide standard thickness measurement instrument with appropriate range(s) for measuring.

   Dry film thickness of each coat, surface profile gauge for checking of surface profile in case of sand blasting. Holiday detectors and pinhole detector and protector whenever required for checking in case of immerse conditions.

ii. At the discretion of OWNER/ OWNER's Representative, contractor has to provide the paint manufacturers expert technical service at site as and when required. For this service, there should not be any extra cost to the OWNER.

iii. Final Inspection shall include measurement of paint dry film thickness, check of finish and workmanship. The thickness should be measured at as many points/ locations as decided by OWNER/ OWNER's Representative and shall be within +10% of the dry film thickness.

iv. The contractor shall produce test reports from manufacturer regarding the quality of the particular batch of paint supplied. The OWNER shall have the right to test wet samples of paint at random for quality of same. Batch test reports of the manufacturer's for each batch of paints supplied shall be made available by the contractor.

18.0 PAINT SYSTEMS

The paint system should vary, with type of environment envisaged in and around the plants. The types of environment as given below are considered for selection of paint system. The paint system is also given for specific requirements.

a) Normal Industrial Environment, Table 18.2.
b) Corrosive industrial Environment, Table 18.3
c) Coastal & Marine Environment, Table 18.4

Notes 1. Primers and finish coats for any particular paint systems shall be from same manufacturer in order to ensure compatibility.

 Copyright VCS Quality Services Private Limited – All rights reserved

TABLE 18.1: LIST OF PRIMERS & FINISH PAINTS

PRIMERS	
P-1	Red oxide Zinc chromate Primer
P-2	Chlorinated rubber zinc Phosphate Primer
P-3	High build Zinc phosphate Primer
P-4	Etch Primer/Wash Primer
P-5	Epoxy Zinc Chromate Primer
P-6	Two component Epoxy Zinc Phosphate Primer cured with polyamine hardener
P-8	Epoxy red oxide zinc phosphate primer
FINISH COATS / PAINTS	
F-1	Synthetic Enamel
F-2	Two component Acrylic – Polyurethane finish paint
F-3	Chlorinated Rubber finish paint
F-5	Chemical resistant phenolic based enamel
F-6	High Build Epoxy finish coating cured with **polyamide** hardener
F-7	High build Coal Tar Epoxy coating cured with **polyamine** hardener
F-8	Self priming surface Tolerant High Build epoxy coating. cured with **polyamine** hardener
F-9	Two component Inorganic Zinc Silicate coating
F-10	High build Reinforced bituminous composition phenol based resin.
F-11	Heat resistant synthetic medium based Aluminium paint suitable for 250 deg C
F-12	Two component Heat resistant Silicone Aluminium paint. suitable for 400 deg C
F-13	Synthetic based aluminium Paint suitable for 150 deg C

Copyright VCS Quality Services Private Limited – All rights reserved

Table – 18.2: Painting System for Normal Industrial Environment for Piping and Equipment (Above Ground)

Sl. No.	Temp. Range	Surface Preparation	Primer	Finish Coat	Total DFT	Remarks
1	-10 to 20	SSPC-SP-3	One coat P-2 50 microns / coat (min)	One coat F-4 65 microns/ coat (min) Two coats F-3, 30 Microns/coat (min)	175	Primer and Finish coat can be applied at ambient temp.
2	21 to 60	SSPC-SP-6	Two coats P-1, 25 microns/ coat (min.)	Two coats of F-1, 20 microns/coat (min)	90	-
3	61 to 80	SSPC-SP-6	Two coats P-3, 50 microns/ coat (min)	Two coats of F-13, 25 microns/coat (min)	150	-
4	81 to 250	SSPC-SP-6	-	Three coats of F-11, 20 microns/ coat (min)	60	Paint application at ambient temp. curing at elevated temp. during start-up.
5	251 to 400	SSPC-SP-10	-	Three coats of F-12, 20 microns/ coat (min)	60	-do-

Copyright VCS Quality Services Private Limited – All rights reserved

Table – 18.3: Painting System for Corrosive Industrial Environment for Piping and Equipment (Above Ground)

SI. No.	Temp. Range	Surface preparation	Primer	Finish Coat	Total DFT	Remarks
1	-14 to 80	SSPC-SP-10	Two coats P-6, 35 microns / coat (min.)	One coats F- 6, 100 microns coat (min.) and one coats F- 2 40 microns coat (min.)	210	Paint application at ambient temp.
2	81 to 250	SSPC-SP-10	-	Three coats F-11, 20 Microns / coat (min.)	60	Paint application at ambient temp. and curing at 250°C for 4 hours
3	81 to 400	SSPC-SP-10	-	Three coats F-12, 20 Microns / coat (min.)	60	Paint application at ambient temp. and curing at 250°C for 4 hours

Copyright VCS Quality Services Private Limited – All rights reserved

Table – 18.4 :Painting System for Coastal and Marine Environment for Piping and Equipment (Above Ground)

SI. No.	Temp. Range	Surface Preparation	Primer	Finish Coat	Total DFT	Remarks
1	-14 to 80	SSPC-SP-10	Two coats P-6. 35 Microns. coat (Min.)	Two coats F- 6, 100 microns /coat (min.) and one coats F-2 40 Microns /coat (min.)	310	Primer and Finish coat application at Ambient temp.
2	81 to 400	SSPC-SP-I0	-	- Three coats F- 12, 20 Microns / coat (min.)	60	Paint application. at ambient temp, and curing at 250°C for 4 hours
3	401 to 550	SSPC-SP- 10	-	Three coats F- 12, 20 Microns / coat (min.	60	Paint application. at ambient temp, and curing at 250°C for 4 hours

Table – 18.5 : Painting System for External Side of Underground Tanks in all areas.

SI. No.	Temp. Range	Surface Preparation	Primer	Finish Coat	Total DFT	Remarks
External side of un-insulated underground storage tanks:						
1	-40 to 80	SSPC-SP-10	1 coat of F-9 @ 65-75μ DFT/ coat	3 coats of F-7 @ 100μ DFT/coat (3x100=300)	365-375	

18.2 Precautions to be taken

Neither the environment of the site nor the marking labels of devices may be covered with paint and they must be kept free of paint splashes. To this end, it is advisable to use removable masking tape.

Paint splashes, leaks, etc. on any adjacent installations such as measuring apparatus, valves, pipes. Sources of light, insulation, heat insulators, walls, concrete, etc, must immediately be wiped up and the damage repaired before the paint is dry.

 Copyright VCS Quality Services Private Limited – All rights reserved

Otherwise, the OWNER will be obliged to have the cleaning carried out at the expense of the Contractor. The paint recipient will only be opened at the time of use (unless otherwise specified by the manufacturer).

The product will be mixed in the recipient with the aid of suitable tools and thus homogenized.

18.3 Method of application

Normally, three methods of application will be used on the construction site for the paint products. i.e. with a brush, with a roller or with a spray gun.

- The brush method makes it possible to obtain good penetration of the paint over irregularities in the metal.
- Only this method will be used for application of the base coats, for retouching and for protrusions, welded areas, riveted joints or bolted joints:
- The roller method may be used on large flat surfaces for the intermediate and topcoats.
- The spray gun method must be used in accordance with the instructions of the manufacturer and carried out by qualified personnel.

The Contractor must guarantee that all safety measures have been taken for such work. The spray gun method may only he used on site for places that are difficult to reach with the brush. In this case, a request must be made to the OWNER/ OWNER's Representative for a deviation.

All paintwork will be carried out with good brushes or rollers that are suitable for the type of paint being used and for the form of the material to be painted and fitted with short handles. The maximum length of the brush and roller handles will be 50 cm; longer handles may only be used for places that are absolutely inaccessible. The maximum width of a brush will be 13 cm.

18.4 Application of the coating

Application of the paint will be carried out in accordance with best practice in order to obtain a homogeneous and continuous layer. The OWNER or the Approved Supervisory body demands that painting of a layer will only be started after acceptance by them of the surface preparation or of the previous layer of paint.

The layers of paint must have a uniform thickness. They must he spread in such a way that all concave parts are dried out and that the surface is completely covered and has a glossy appearance without leaving brush marks and without exhibiting bubbles, foam, wrinkles, drips, craters, skins or gums that arise from weathered paint,

 Copyright VCS Quality Services Private Limited – All rights reserved

Each layer must have the color stipulated in the tables of the present specifications, which clearly differs from the previous layer, taking account of the Color of the top layer, all of which for the purpose of being able to identify the number of coats and their order of sequence. If the color of the coats is not mentioned in the tables the color difference in consecutive coats must, if possible, he at least 100 RAL. The color of the top layer is given in the table.

The coating power should be such that the underlying layer is not visible. Only 1 layer per day may be applied, unless otherwise specified by the OWNER or the Approved Supervisory Body.

The drying times prescribed by the paint manufacturer must be strictly observed in relation to the environmental conditions before proceeding with the application of the next layer.

The dry coating thickness indicated in the description of the paint systems are minimum thickness. In this connection, the Contractor is obliged to contact the paint manufacturer and conform to his guidelines. The Contractor must respect the thickness specified by the supplier.

18.5 Transporting treated items

In the case of works being carried out in a workshop, the metal structures will be surrounded by ventilated contraction film that prevents damage during transportation. This film may only be applied after complete polymerization of the paint.

19.0 GROUND-LEVEL TRANSITION POINT

19.1 Polyester protection system

The Contractor will provide system 02 over the entire length of the pipes above ground and below ground and up to a height of 20 cm and a depth of 40 cm. perpendicular to the ground level mark. In each case, he must ensure that the jointing below the asphalt is in good condition and assures' faultless adhesion. He will apply the following products over the entire surface area, prepared in accordance with is Sa 3:

1) The primer of system 01.

2) Reinforced polyester ± 20 cm above the ground level marker and ± 5 cm on the asphalt cleaned beforehand (application of reinforced polyester is carried out in accordance with the work method prescribed by the manufacturer). Moreover, in the case of PE, in contrast to asphalt, he will apply a polygon primer to PE immediately before applying the reinforced polyester.

3) He will then apply the other coats of system 01a to the surface section and thus

 Copyright VCS Quality Services Private Limited – All rights reserved

cover the reinforced polyester with about 5 cm.

4) For new constructions, the polygon primer will be applied to PE and then subsequently processed as described under point 2.

20.0 USE OF SCAFFOLDING

Mounting, maintenance and dismantling of scaffolding for carrying out adaptation and/or paintwork to surface gas pipes or gas transport installations in use;

- The Contractor will specify the cost of scaffolding in the price list.
- The supplementary rental price for delays attributable to the Contractor will be charged to him:
- In his price quotation the Contractor should present the OWNER with diagrams of the scaffolding that he intends to install for carrying out the works of the OWNER.

21.0 QUALITY CONTROLS AND GUARANTEE

21.1 The Contractor is responsible for checking the weather conditions to ascertain whether the paintwork can be carried out within the technical specifications.

The Contractor should have the required calibrated monitoring apparatus for this purpose on site (with calibration certificates). The personnel who will have to use this apparatus should have the training for this purpose.

The OWNER or his representative and possibly the approved supervisory body indicated by the OWNER will maintain supervision during the works and inspect the works with random checks. A daily report will be drawn up in relation to the department that maintains supervision of these works.

The supplementary inspection and the supervision by the OWNER or the approved supervisory body do not diminish in any way the liability of the Contractor. The proper execution of the work and the materials used may be checked at any time.

21.2 Reference Surfaces

At the start of the works. The OWNER or the approved supervisory body will indicate a few surfaces that the Contractor will prepare and cover in accordance with the recognized method of operation under the inspection and to the satisfaction of all parties; the OWNER or his representative, the approved supervisory body, the contractor and possibly the paint manufacturer. These reference surfaces will serve as a point of comparison for the good adhesion of the paint on the installations as a whole. The parties will together work out a system for the identification of these surfaces in order to be able to monitor the conditions of the coatings over time. If the paintwork on a section of the installations

 Copyright VCS Quality Services Private Limited – All rights reserved

is in a worse condition than the reference surfaces, the Contractor may be obliged to treat these parts again.

21.3 Measures to be taken in the event of a dispute

If on delivery of the works no agreement can be reached between the Contractor and the OWNER regarding the conformity of the works to the requirements of these specifications, an Approved Supervisory Body will he Called in. The Approved Supervisory Body will then carry out inspections' on site whereby the following assessment criteria will be used:

- The Swedish standards ISO 8501-1 1988 SS 05.5900 concerning the degree of cleanliness of the areas derusted by blasting, by machine or by hand.

- The wet film thickness of the paint will be measured in accordance with ISO 2808 or ASTM DI 212;

- The dry layer thickness of the film will be measured electronically, will complete statistical information. in accordance will, ISO 2808 or ASTM D 1186.

- The thickness of each layer will be measured in accordance with ISO 2808. ASTM 4138 or DIN 50986.

- Adhesion tests will be carried out in accordance with ISO 2409. ASTM 3359 or DIN 53151.

- Traction tests will he carried out in conformity with ISO 4624 or ASTM D 4541.

- The rugosity will be measured electronically in accordance with DIN 4768;

- The non-porosity will be measured with a test tension depending on the type of coating, the layer thickness and after consultation with the Paint manufacturer.

- Any defects in the paint film may be inspected visually by means of a magnifying glass or microscope. If necessary a photographic report may be drawn up in accordance with ASTM Standard D 4121-82.

The final judgment of the Approved Supervisory Body is irrevocable and binding for the Contractor and the OWNER. In the event of non-conformity of the works with the criteria of these specifications, all costs arising from the inspection by the Approved Supervisory Body shall be borne by the Contractor.

21.4 Guarantee

a) General Principles

The Contractor declares that he is aware of:

 Copyright VCS Quality Services Private Limited – All rights reserved

- The maximum operating temperature of the surfaces to be covered.
- The maximum permitted degree of humidity of the bearing surface.

- The properties of the environment to which the surfaces to be covered are: subject.

b) Summary of the Guarantee.

The contractor fully guarantees the following without reservation:

- The observance of all stipulations of the specifications for paintwork regarding, among other things:
  - The preparation of the surfaces.
  - The thickness of each layer.
  - The total thickness of the covering.
- The uniformity of the materials used.
- The repair of all defects before delivery of the works.

The Contractor will carry out the requested repair work as promptly as possible.

 Copyright VCS Quality Services Private Limited – All rights reserved

ENERGISING QUALITY

VCS QUALITY SERVICES PVT.LTD.

STANDARD SPECIFICATION
FOR
PIPELINE BALL VALVES

VPC-SS-PP-2004

03	**03.01.2022**	**SR**	**MC**	**HK**	**HK**
Rev. No	**Date**	**Prepared By**	**Checked By**	**Approved By**	**Authorized By**

UNCONTROLLED COPY	:	**If printed**
CONTROLLED COPY	:	**If in soft and signed**

Copyright VCS Quality Services Private Limited – All rights reserved

REVISION RECORD						
Rev.	**Revision Date**	**Prepared by**	**Checked by**	**Approved by**	**Authorized by**	**Revision Description**
00	23.06.2017					Issued as Standard
		AS	SM	AD	SK	
01	22.05.2019					Revised based on API 6D 24TH Edition.
		BS	MC	AD	SK	
02	28.01.2020					Documents Formatting, numbering updated from SS-PL-004 to VPC-SS-PP-2004, vent drain Diagram updated, other Detail updated as marked
		MB	MC	AD	SK	
03	07.01.2022					Revised as Marked
		SR	MC	HK	HK	

Copyright VCS Quality Services Private Limited – All rights reserved

ABBREVIATIONS:

ASME	American Society of Mechanical Engineers
ASTM	American Society for Testing and Materials
API	American Petroleum Institute
BHN	Brinell Hardness Number
DN	Nominal Size
HAZ	Heat Affected Zone
LC	Lock Close (valve locked in full close position)
LO	Lock Open (valve locked in full open position)
MSS-SP	Manufacturers Standardization Society - Standard Practice
NDT	Non Destructive Testing
NPS	Nominal Pipe Size
RTJ	Ring Type Joint
SSPC	Steel Structures Painting Council
MPI	Magnetic Particle Inspection
DP	Dye Penetrant

Copyright VCS Quality Services Private Limited – All rights reserved

CONTENTS

1 SCOPE 5
2 REFERENCE DOCUMENTS 5
3 MATERIALS 6
4 DESIGN AND CONSTRUCTION REQUIREMENTS 7
5 INSPECTION & TESTS 13
6 TEST CERTIFICATES 16
7 PAINTING 16
8 MARKING & SHIPMENT 16
9 SPARES & ACCESSORIES 17
10 DOCUMENTATION 17

Copyright VCS Quality Services Private Limited – All rights reserved

1 SCOPE

This specification covers the minimum requirements for design, manufacture, testing and supply of carbon steel ball valves of size DN 50 mm (2") and above and ASME pressure rating Class 150# thru 900# for use in onshore pipeline systems handling non-sour hydrocarbons in liquid or gaseous phase including Liquefied Petroleum Gas (LPG).

2 REFERENCE DOCUMENTS

All valves shall be manufactured and supplied in accordance with the American Petroleum Institute (API) Specification 6D, latest edition (edition in force at the time of issue of enquiry), Specification for Pipeline and Piping Valves, with additions and modifications as indicated in the following sections of this specification.

Reference has also been made in this specification to the latest edition (edition in force at the time of issue of enquiry) of the following Codes, Standards and Specifications.

2.1 American Society of Mechanical Engineers (ASME)

B31.3	:	Process Piping.
B31.4	:	Pipeline Transportation System for Liquid and Slurries.
B 31.8	:	Gas Transmission and Distribution Piping Systems.
B16.5	:	Pipe Flanges and Flanged Fittings.
B16.10	:	Face to Face and End to End Dimensions of Valves.
B 16.25	:	Butt Welding Ends.
B 16.34	:	Valves-Flanged, Threaded and Welding Ends.
B 16.47	:	Large Diameter Steel Flanges.
Section VIII	:	Boiler and Pressure Vessel Code - Rules for Construction of Pressure Vessels.
Section IX	:	Welding and Brazing Qualifications.

2.2 American Petroleum Institute (API)

1104	:	Specification for Welding of Pipelines and Related Facilities.

2.3 American Society for Testing and Materials (ASTM)

A370	:	Standard Test Methods and Definitions for Mechanical Testing of Steel Products.
B 733	:	Auto catalytic (Electro less) Nickel - Phosphorus Coatings on Metal.

Copyright VCS Quality Services Private Limited – All rights reserved

2.4 Manufacturers Standardization Society (MSS)

SP-6	:	Standard Finishes for contact faces of Pipe Flanges and Connecting – End Flanges of Valves and Fittings.
SP-44	:	Steel Pipeline Flanges.

2.5 Steel Structures Painting Council (SSPC)

SSPC-VIS-I	:	Steel Structures Painting Council Visual Standard-Guide and Reference Photographs for Steel Surfaces prepared by Dry Abrasive Blast Cleaning.

2.6 In case of conflict between the requirements of this specification, API 6D and the Codes, Standards and Specifications referred above, the requirements of this specification shall govern.

3 MATERIALS

3.1 The material of major components of the ball valves shall be as indicated in Valve Data Sheet. Remaining components shall be as per Manufacturer's standard (suitable for the service indicated in the data Sheet) and shall be subjected to approval by Company. In addition, the material shall also meet the requirement specified hereinafter.

All process-wetted parts, metallic and non-metallic, sealant and lubricants shall be suitable for the service specified by the Company. Manufacturer shall confirm that all wetted parts are suitable for treated water/ seawater environment, which may be used during field testing.

Non-metallic parts of the valves (including O-rings, soft seals etc.) intended for hydrocarbon gas service shall be resistant to explosive decompression.

3.2 Carbon steel used for the manufacture of valves shall be fully killed.

3.3 The carbon equivalent (CE_{IIW}) of valve end connections which are subject to further field welding by Company shall not exceed 0.43 on check analysis for each heat of steel used, as calculated by the following formula:

$$CE_{IIW} = C + \frac{Mn}{6} + \frac{Cr + Mo + V}{5} + \frac{Cu + Ni}{15}$$

3.4 Charpy V-Notch Test Requirements

Charpy V-notch test on each heat of base material shall be conducted for all pressure containing parts such as Body, End Flanges, Stem and Welding Ends as well as Bolting materials for pressure containing parts.

Test procedure for Charpy V-Notch Test shall conform to ASTM A370.

For Carbon Steel, alloy steel & Stainless Steel (except Austenitic Grades) Materials, The impact test temperature shall be 0 °C or minimum design temperature indicated in valve

Copyright VCS Quality Services Private Limited – All rights reserved

data sheet / MR, whichever is lower. The average absorbed energy value of three full sized specimens shall be 27 J (for materials with Specified Minimum Tensile Strength ≤100,000 psi)/ 34 J (for materials with Specified Minimum Tensile Strength >100,000 psi). The minimum impact energy value of any one specimen of the three specimens analysed as above, shall not be less than 22 J (for materials with Specified Minimum Tensile Strength ≤100,000 psi)/ 26 J (for materials with Specified Minimum Tensile Strength >100,000 psi).

For Low Temperature Carbon Steel Materials, the impact test temperature shall be as per requirement of Material Standard or minimum design temperature indicated in valve data sheet/MR, whichever is lower. The average absorbed energy value of three full sized specimens shall be 27 J (for materials with Specified Minimum Tensile Strength ≤100,000 psi)/ 34 J (for materials with Specified Minimum Tensile Strength >100,000 psi). The minimum impact energy value of any one specimen of the three specimens analysed as above, shall not be less than 22 J (for materials with Specified Minimum Tensile Strength ≤100,000 psi)/ 26 J (for materials with Specified Minimum Tensile Strength >100,000 psi).

Where the material specification requires impact values to be higher than specified in the above paragraphs, the higher values shall apply.

For duplex & super duplex stainless steel the Charpy V-Notch test values and test temperature shall be as per API 6D.

3.5 Hardness Test Requirements

For valves specified to be used for Gas service or LPG service, Hardness test shall be carried out as per ASTM A370 for each method of manufacture and each heat of steel used in the manufacture of valves. A full thickness cross section shall be taken for this purpose and the maximum hardness of the materials of valve components shall not exceed 248 HV_{10}.

3.6 Electroless Nickel Plating Requirements

For all such valves where Carbon Steel/Low temperature carbon steel is used as ball material, the ball shall have 75 micrometers (0.003 inches) thick Electro less Nickel Plating (ENP) as per ASTM B 733 with following classification:

- SC2, Type II, Class 2.

The hardness of plating shall be minimum 50 RC.

4 DESIGN AND CONSTRUCTION REQUIREMENTS

4.1 General

Valve design shall meet the requirements of API Specification 6D and shall be suitable for the service conditions indicated in the Valve Data Sheet. The ASME Boiler & Pressure Vessel Code, Section VIII, Div 1 shall be used to design the valve body. Allowable stress requirements shall comply the provisions of above code. Also, corrosion allowance indicated in Valve Data Sheet shall be considered in valve design; however, the minimum wall thickness shall not be less than the minimum requirement of ASME B16.34. The

Copyright VCS Quality Services Private Limited – All rights reserved

manufacturer shall have valid license to use API monogram on valves manufactured as per API 6D.

4.2 Valve Installation

Valves shall be suitable for either buried or above ground installation as indicated in Valve Data Sheet/ Material requisition.

4.3 Valve Body

4.3.1 For above ground valve, valve body design shall be either fully welded or bolted type. For buried valves, valve body design shall be fully welded type only. Valve body joints with threads are not permitted.

4.3.2 Ball mounting shall be trunnion or pivot type only. Valve design shall minimize the possibility of debris ingress into the trunnion as far as practicable

4.4 Ball

Ball shall be of single piece, solid type construction.

4.5 Valve Bore Configuration

Valves shall be Full bore (FB) or Reduced bore (RB) as indicated in the Valve Data Sheet.

Full Opening Valve

Full bore valves shall be suitable for the passage of all types of pipeline pigs including instrumented intelligent pigs and regular cleaning, batching and scraper pigs on regular basis without causing damage to either the valve component or the pig. The full bore, valve shall provide an unobstructed profile for pigging operations in either direction. Full bore valves shall be designed to minimize accumulation of debris in the seat ring region to ensure that valve movement is not impeded. The bore of full bore butt-welded & flanged valves shall be in line with Connecting pipe as stated in valve data sheet or Valve MR, however in any case it shall not be less than the minimum required shown in Client Ball Valve specification & API 6D.

Reduced Opening Valve

The bore size of reduced bore valve shall correspond to that of a full-bore valve of smaller nominal diameter as indicated in Table- 4.5 below. For sizes of a particular rating not covered in API 6D, the bore size of the reduced bore valve shall be as per manufacturer`s Standard.

TABLE – 4.5

Nominal Valve Size	Nominal Valve Size for Reduced Bore	Nominal Valve Size	Nominal Valve Size for Reduced Bore
DN mm (NPS inches)	DN mm (NPS inches)	DNmm (NPSinches)	DNmm (NPS inches)
50 (2)	40 (1.5)	600 (24)	500 (20)

Copyright VCS Quality Services Private Limited – All rights reserved

80 (3)	50 (2)	650 (26)	550 (22)
100 (4)	80 (3)	700 (28)	600 (24)
150 (6)	100 (4)	750 (30)	600 (24)
200 (8)	150 (6)	800 (32)	650 (26)
250 (10)	200 (8)	850 (34)	700 (28)
300 (12)	250 (10)	900 (36)	750 (30)
350 (14)	250(10)	950 (38)	800 (32)
400 (16)	300 (12)	1000 (40)	850 (34)
450 (18)	350 (14)	1050 (42)	900 (36)
500 (20)	400 (16)	1200 (48)	1050 (42)
550 (22)	450 (18)		

4.6 Seat Design

The valves shall either be a soft seated valve or metal seated valve or with primary metal-to metal contact and secondary soft seats or seat design shall be as indicated in valve data sheet.

For soft seated valves, Metal seat rings may be provided with soft insert. The same shall be positively locked in position in Metal seat rings.

For valves with primary metal to metal contact and secondary soft seats, O-rings or other seals if used for drip tight sealing shall be encased in a suitable groove in such a manner that it cannot be removed from seat ring and there is no extrusion during opening or closing operation of valve at maximum differential pressure corresponding to valve class rating. The seat rings shall be so designed as to ensure sealing at low as well as high differential pressures.

4.7 Valves shall be designed to withstand a sustained internal vacuum of at least 1 (one) mille-bar in both open and closed positions.

4.8 Double Block & Bleed Design

Valves shall have double block and bleed feature to facilitate complete flush, drain and venting of the valve body cavity. Cavity relief pressure shall be as per API 6D.

4.9 Sealant Injection

Full bore valves of nominal valve size DN 200 mm (8") & above and Reduced Bore valves of nominal valve size DN 250 mm (10") & above, shall have provision for secondary sealant injection under full line pressure for seat and stem seals. All sealant injection connections shall be provided with block valve and an internal non-return valve. Valve design shall have a provision to replace the sealant injection fitting under full line pressure. Location and arrangement of sealant points shall be as per Fig 4.9.

4.10 Vent & Drain

Valves shall be provided with vent and drain connections. Location and arrangement of

Copyright VCS Quality Services Private Limited – All rights reserved

vents and drains shall be as per Fig. 4.9. Body vent and drain shall be provided with valves (Ball or Plug type). Number and size shall be as per Fig. 4.9.

Valve design shall ensure repair of stem seals/ packing under full line pressure.

4.11 Support Foot

Full bore valves of nominal valve size DN 200 mm (8") & above and Reduced bore valves of nominal valve size DN 250 mm (10") & above, shall be equipped with support foot and lifting lugs unless specified otherwise. Tapped holes and eyebolts shall not be used for lifting lugs. Height of support foot shall be kept minimum. The location and size of support foot/ lifting lugs shall ensure unrestrictive operation of vent/ drain valves. The design of support foot shall be such that it shall take minimum double the weight of the valve assembly.

4.12 Valve design shall be such as to avoid bimetallic corrosion between carbon steel and high alloy steel components. Suitable insulation shall be provided as required.

4.13 The valve body cavity over-pressure shall be prevented by self-relieving seat rings/ assemblies. Valve Cavity relief pressure when added to the valve pressure rating shall not exceed 133% of the pressure rating of the valve at its maximum specified design temperature.

4.14 Valve Ends

Valve ends shall be either flanged/ or butt welded or one end flanged and one end butt welded as indicated in the Valve Data Sheet. Flanges of the flanged end cast/ forged body valves shall be integrally cast/ forged with the body of the valve. Face to face/ end to end dimensions shall conform to API 6D. Face-to-face and end-to-end dimensions for valve sizes not specified in API 6D shall be in accordance with ASME B 16.10. Face-to-face and end-to-end dimensions not shown in API 6D or in ASME B 16.10 shall be as per Manufacturer Standard and shall be subject to approval by Company.

Flanged ends, if specified, shall have flanges as per ASME B16.5 for valve sizes up to DN 600 mm (24") excluding DN 550 mm (22"), as per MSS-SP-44/ ASME B 16.47 Series A for valve sizes DN 550 mm (22") and for DN 650 mm (26 inches) and above. Flange face shall be either raised face or ring joint type (RTJ) as indicated in Valve Data Sheet. Flange face finish shall be serrated or smooth as indicated in Valve Data Sheet. In case of RTJ flanges, the groove hardness shall be minimum 140 BHN.

Butt weld end preparation shall be as per ASME B 16.25. The thickness of the pipe to which the valve has to be welded shall be as indicated in the Valve Data Sheet. In case difference exists between thickness of welding ends of valve and connecting pipe, the welding ends of valve shall have bevel preparation as per ASME B31.4 or ASME B31.8 as applicable.

In case of all Butt welded end valves (including soft seated valves or valves with primary metal to metal and secondary soft seats), actual yield strength of valve body shall not be less than 2/3rd of the specified minimum yield strength (SMYS) of the connecting pipe material.

For soft seated valves with Butt welded end, valves shall be provided with pup pieces on

Copyright VCS Quality Services Private Limited – All rights reserved

either side of length 200 mm each for size up-to 8" & 250 mm for size 10" and above, with material as specified in valve data sheet. Length of pup piece shall be confirmed by manufacturer so as to avoid damage to seats during field welding or post weld heat treatment. Pup piece thickness shall be calculated for the class rating. Vendor shall provide for each type (considering size, grade and thickness of the pup pieces used for all offered valves) of pup piece, test rings (500 mm long) from pup piece material for field weld procedure qualification. Valves shall be tested along-with pup piece.

4.15 Design of weld end valves shall be such that during field welding operations, the soft seals or plastic components of the valve (where ever used) is not liable to be damaged. The manufacturer shall furnish necessary field welding instructions and post-weld test procedure to demonstrate integrity and leak-tightness of valves after field welding operations.

4.16 POSITION INDICATORS

Valve shall be provided with ball position indicator and stops of rugged construction at the fully open and fully closed positions. For actuated valves, additionally mechanical means of position indicator shall be provided.

4.17 STEM EXTENSIONS

When stem extension requirement is indicated in Valve Data Sheet, the valves shall have the following provisions.

a. Valves provided with stem extension shall have water proof outer casing. Length of stem extension shall be as indicated in Valve Data Sheet. The length indicated corresponds to the distance between centerline of the valve opening and the top of mounting flange for valve operating device (gear operator/ power actuator as applicable).
b. In case of below Ground LTCS valves, Stem extension material shall be equivalent to stem material.
c. Vent and drain connections and sealant injection lines shall be terminated adjacent to the valve operator by means of suitable piping anchored to the valve body. The pipe used shall be API 5L Gr. B/ ASTM A 106 Gr. B, with Sch 160 for carbon steel valves and ASTM A 333 Gr 6, with Sch 160 for Low temperature carbon steel valves or the material shall be as specified in valve data sheet. The material of fittings for Carbon Steel valve shall be ASTM A105/ ASTM A234 Gr. WPB and material for the fittings for low temperature carbon steel valves shall be ASTM A 350 Gr LF2 Cl 1 or the material shall be as specified in valve data sheet. The fittings and valve end shall be Socket welded ANSI class 6000# as per ASME B 16.11 (For piping class up to 600#) and BW end (For Piping Class 900#).
d. Stem extension and stem housing design shall be such that the complete assembly will form a rigid unit giving positive drive under all conditions with no-possibility of free movement between valve body, stem extension or its operator.
e. Outer casing of stem extension shall have 3/8” or 1/2" NPT plugs at the top and bottom, for draining and filling with oil to prevent internal corrosion.
f. The Stem Extension shall be self-relieving.

Copyright VCS Quality Services Private Limited – All rights reserved

4.18 OPERATING DEVICES

a. Valves shall have a power actuator or manual operator as indicated in the Valve Data Sheet. In case of manual operator, valve sizes, DN ≤ 100 mm (4") shall be wrench operated and valve sizes, DN ≥ 150 mm (6") shall be gear operated. The length of wrench shall not be longer than twice the face to face or end to end dimension of the valve. Each wrench operated valve shall be supplied with wrench. Valve design shall be such that damage due to malfunctioning of the operator or its controls will only occur in the operator gear train or power cylinder and that damaged parts can be replaced without the valve cover being removed.

b. The power actuator shall be in accordance with the Company Specification issued for the purpose and as indicated in the Valve and Actuator Data Sheet. Operating time shall be as indicated in Valve Data Sheet. Valve operating time shall correspond to full close to full open/ full open to full close under maximum differential pressure corresponding to the valve rating. For actuated valves, the actuator's rated torque output shall be 1.25 times the break torque required to operate the ball valve under the maximum differential pressure corresponding to the Valve Class Rating.

c. For the manual operator of all valves, the diameter of the hand wheel or the length of operating wrench shall be such that under the maximum differential pressure, the total force required to operate the valve does not exceed 350N. However, failing to meet above requirement, vendor shall offer gear operated valves. Manufacturer shall also indicate the number of turns of hand wheel in case of gear operators (along with their offer) required for Operating the valve from full open to full close position. The numbers of turn shall not exceed 250 for valves sizes up to 24” and 450 for valve size above 24”.

d. Direction of operation of hand wheel or wrench shall be in clock-wise direction while closing the valve. Hand wheels shall not have protruding spokes.

e. Gear operators, when provided, shall have a self-locking provision and shall be fully encased in water proof/ splash proof enclosure and shall be filled with suitable grease.

4.19 The tolerance on internal diameter and out of roundness at the ends for welded ends valves shall be as per connected pipe specification as indicated in the Valve Data Sheet.

4.20 LOCKING DEVICES

When indicated in Material Requisition/Data sheet/ Tender, valves shall have locking devices to lock the valve either in full open (LO) or full close (LC) positions. Locking devices shall be permanently attached to the valve operator and shall not interfere with operation of the valve.

4.21 WELDING

All welds shall be made by welders and welding procedures qualified in accordance with the provisions of ASME Section IX. The procedure qualification shall also include impact test and hardness test when required as per Clause 3.4 to 3.5 of this specification and shall meet the requirements as specified therein.

4.22 REPAIR WELDING

Repair by welding is not permitted for fabricated and forged body valves. However, repair

Copyright VCS Quality Services Private Limited – All rights reserved

by welding as per ASME B16.34 is permitted for cast body valves. Such repairs shall be carried out at casting supplier's care only. Repair shall be carried out before any heat treatment of casting is done. Repair welding procedure qualification shall also include impact test and hardness test when required as per Clause 3.4 to 3.5 of this specification and shall meet the requirements as specified therein. Heat treatment and radiography shall be repeated after the weld repair.

4.23 No Casting is permitted for stem and stem extended material of all valve. Valve stem shall be capable of withstanding the maximum operating torque required to operate the valve against the maximum differential pressure corresponding to applicable class rating. The combined stress shall not exceed the maximum allowable stresses specified in ASME section VIII, Division 1. For power actuated valves, the valve stem shall be designed for maximum output torque of the selected power actuator (including gear box, if any) at valve stem.

4.24 Wherever specified for the part of valve in valve data sheet, minimum thickness of stelliting shall be 1.6mm

4.25 All Soft seated valves shall be fire safe design and qualified as per API 6FA/ API 607/ ISO 10497.

4.26 Soft-seated valves shall have antistatic device.

5 INSPECTION & TESTS

5.1 The Manufacturer shall perform all inspection and tests as per the requirements of this specification and the relevant codes, prior to shipment, at his works. Such inspection and tests shall be, but not limited to, the following:

5.2 All valves shall be visually inspected. The internal and external surfaces of the valves shall be free from any strikes, gouges and other detrimental defects. The surfaces shall be thoroughly cleaned and free from dirt, rust and scales.

5.3 Dimensional check on all valves shall be carried out as per the Company approved drawings.

5.4 Chemical composition and mechanical properties shall be checked as per this specification and relevant material standards, for each heat of steel used.

5.5 Non-destructive examination of individual valve material and component consisting of but not limited to castings, forgings, plates and assembly welds shall be carried out by the Manufacturer.

a. Body castings of all valves shall be radio graphically examined as per ASME B16.34. Procedure and acceptance criteria shall be as per ASME B 16.34. The extent of the radiography shall be as under:

Pressure Class Rating	Valve Size	Extent of Radiography
ANSI 150 # Class	≤ DN 600 mm (24")	Nil
	≥ DN 650 mm (26")	100%

Copyright VCS Quality Services Private Limited – All rights reserved

ANSI 300 # Class	≤ DN 400 mm (16") ≥ DN 450 mm (18”)	Nil 100%
ANSI 600 # Class and above	All sizes	100%

Radiography shall be performed after the final heat treatment also.

All castings shall be wet magnetic particle inspected 100% of the internal surfaces. Method and acceptance shall, comply with ASME B 16.34.

b. All valves, with body fabricated from plates or made by, forgings, shall be ultrasonically examined in accordance with the procedure and acceptance standard as per ASME B16.34.

   All forgings shall be Wet magnetic particle inspected 100% of the internal surfaces. Method and acceptance shall comply with ASME B16.34.

c. Bodies and bonnets made by welded assembly of segments of castings, forgings, plates or combinations thereof shall be examined, as applicable, by methods of 5.5 (a) for cast components or 5.5 (b) for forged components and plates.

5.6 Full inspection by radiography shall be carried out on all welds of pressure containing parts. Acceptance criteria shall be as per ASME B 31.4 or ASME B31.8 as applicable and API 1104.

5.7 Welds, which in Company's opinion cannot be inspected, by radiographic methods, shall be checked by ultrasonic or magnetic particle methods and acceptance criteria shall be as per ASME Sec. VIII , Division 1, Appendix 12 and, Appendix 6 respectively.

5.8 All finished wrought weld ends subject to welding in field shall be 100% ultrasonically tested for lamination type defects for a distance of 50 mm from the end. Laminations shall not be acceptable.

a. Weld ends of all cast valves subject to welding in field shall be 100% radio graphically examined and acceptance criteria shall be as per ASME B16.34.

b. After final machining, all bevel surfaces shall be inspected by dye penetrant or wet magnetic particle methods. All defects longer than 6.35 mm are rejected, as are the defects between 6.35 mm and 1.59 mm that are separated by a distance less than 50 times their greatest length. Rejectable defects must be removed. Weld repair of bevel surface is not permitted.

5.9 All valves shall be tested in compliance with the requirements of API 6D. During pressure testing, valves shall not have sealant lines and other cavities filled with sealant, grease or other foreign material: The drain, vent and sealant lines shall be either included in the hydrostatic shell test or tested independently. Test pressure shall be held for at least 30 minutes for both Shell & seat Test. No leakage is permissible during hydrostatic testing. The body cavity self-relieving feature meeting the requirements of clause 4.13 of this specification shall also be checked.

5.10 A supplementary air seat test as per API 6D (Annex I, Para I.9 Type II) shall be carried

Copyright VCS Quality Services Private Limited – All rights reserved

out for all valves. A bubble tight seal is required without the use of any sealant. No leakage is allowed. Test pressure shall be held for at least 15 minutes.

5.11 Valves shall be subjected to Operational Torque Test as per API 6D (Annex I, Para I.6) under hydraulic pressure equal to maximum differential pressure corresponding to the applicable ANSI class rating of valve. It shall be established that the force required to operate the valve does not exceed the requirements stated in section 4.18 (C) of this specification.

5.12 Power actuated valves shall be tested after assembly of the valve and actuator, at the valve Manufacturer's works. At least five Open-Close-Open cycles without internal pressure and five Open-Close-Open cycles with maximum differential pressure corresponding to the valve rating shall be performed on the valve actuator assembly. The time for Full Open to Full Close shall be recorded during testing. If required, the actuator shall be adjusted to ensure that the opening and closing time is within the limits stated in Valve Data Sheet.

Hand operator provided on the actuator shall also be checked after above testing, for satisfactory manual over-ride performance.

These tests shall be conducted on minimum one valve out of a lot of five (5) valves of the same size, rating and the actuator model/ type. In case, the tests do not meet the requirements, retesting/ rejection of the lot shall be decided by the Company's Inspector.

5.13 Subsequent to successful testing as specified in clause 5.11 and 5.12 above, one (1) valve out of the total ordered quantity shall be randomly selected by the Company Representative for cyclic testing as mentioned below:

a. The valve shall be subjected to at least 100 Open-Close-Open cycles with maximum differential pressure corresponding to the valve rating.
b. Subsequent to the above, the valve shall be subjected to hydrostatic test and supplementary air seat test in accordance with clause 5.9 and 5.10.

In case this valve fails to pass these tests, the valve shall be rejected and two more valves shall be selected randomly and subjected to testing as indicated above. If both valves pass these tests, all valves manufactured for the order (except the valve that failed) shall be deemed acceptable. If either of the two valves fails to pass these tests, all valves shall be rejected or each valve shall be tested at the option of manufacturer.

Previously carried out test of similar nature shall be considered acceptable if the same has been carried out by Manufacturer in last two years. Valves of two sizes below and two sizes above the size of valve previously tested, and rating similar or one rating lower of valve tested previously, shall be qualified.

5.14 Checks shall be carried out to demonstrate that the dissimilar metals used in the valves are successfully insulated as per the requirement of clause 4.12 of this specification.

5.15 Anti-Static testing for soft seated valves in accordance with L.5 of API 6D.

5.16 Company reserves the right to perform stage wise inspection and witness tests as indicated in clause 5.1 above at Manufacturer's works prior to shipment. Manufacturer shall give reasonable access and facilities required for inspection to the Company's

Copyright VCS Quality Services Private Limited – All rights reserved

Inspector. Company reserves the right to require additional testing at any time to confirm or further investigate a suspected fault. The cost incurred shall be to Manufacturer's account.

In no case shall any action of Company or his inspector shall relieve the Manufacturer of his responsibility for material, design, quality or operation of valves.

Inspection and tests performed/ witnessed by the Company's Inspector shall in no way relieve the Manufacturer's obligation to perform the required inspection and tests.

6 TEST CERTIFICATES

Manufacturer shall submit the following certificates in accordance with EN 10204 3.2.

a. Mill test certificates relevant to the chemical analysis and mechanical properties of the materials used for the valve construction as per the relevant standards.
b. Report on heat treatment carried out.
c. Test certificates of hydrostatic and pneumatic tests complete with records of timing and pressure of each test.
d. Test reports of radiograph and ultrasonic inspection, MPI and DP Inspection
e. Test report on operation of valves conforming to clause 5.11, 5.12 and 5.13 of this specification.
f. All other test reports and certificates as required by API 6D and this specification.

The certificates shall be considered valid only when signed by Company's Inspector. Only those valves which have been certified by Company's Inspector shall be dispatched from Manufacturer's works.

7 PAINTING

Valve surface shall be thoroughly cleaned, freed from rust and grease and applied with sufficient coats of corrosion resistant paint. Surface preparation shall be carried out by shot blasting to SA-2 ½ / SSPC-SP10. For Coastal area, painting shall be suitable for industrial marine environment. For the valves to be installed underground, when indicated in Valve Data Sheet, the external surfaces of buried portion of the valve shall be painted with 100% Solid high build epoxy with a minimum dry film thickness of 1000 microns or 1.5 mm thick polyurethane coating.

8 MARKING & SHIPMENT

8.1 All valves shall be marked as per API 6D. The units of marking shall be metric except nominal diameter, which shall be in inches.

8.2 Valve ends shall be suitably protected to avoid any damage during transit. All threaded and machined surfaces subject to corrosion shall be well protected by a coat of grease or other suitable material. All valves shall be provided with suitable protectors for flange faces, securely attached to the valves. Bevel ends shall be protected with metallic or high impact plastic bevel protectors.

8.3 All sealant lines and other cavities of the valve shall be filled with sealant before shipment.

Copyright VCS Quality Services Private Limited – All rights reserved

8.4 Packaging and shipping instructions shall be as per API 6D.

8.5 The serial number of each valve indicated on its name plate shall appear on all required documentation in accordance with EN 10204 3.2.

8.6 Name Plate material shall be minimum stainless steel. Marking shall be as per MSS-SP-25

8.7 All valves shall be transported with ball in fully opened condition

8.8 On packages, following shall be marked legibly with suitable marking ink:

a. Order Number
b. Manufacturer's Name
c. Valve size and rating
d. Tag Number
e. Serial Number

9 SPARES & ACCESSORIES

9.1 Manufacturer shall furnish list of recommended spares and accessories for valves required during start-up and commissioning and supply of such spares shall be included in the price quoted by Manufacturer.

9.2 Manufacturer shall furnish list of recommended spares and accessories required for two years of normal operation and maintenance of valves and price for such spares shall be quoted separately.

10 DOCUMENTATION

Documentation to be submitted by Manufacturer to Company is summarized below. Number of Copies (Hard copies / soft copies etc.) shall be as indicated in CONTRACT document.

10.1 At the time of bidding, Manufacturer shall submit the following documents:

a. Reference list of similar ball valves manufactured and supplied in last seven years indicating all relevant details including project, year, client, location, size, rating, service etc.

b. Torque curves for the power actuated valves along with the break torque, running torque for the valve stem and maximum allowable stem torque.

c. Copy of valid API 6D Certificate.

d. Fire Safe test certificate qualifying the valves as per API 6FA/ API 607/ ISO 10497 carried out in last 10 years shall be furnished.

e. Details of support foot including dimensions and distance from valve centreline to bottom of support foot.

f. List of recommended spares required during start-up and commissioning & 2 years of normal operation and maintenance.

Copyright VCS Quality Services Private Limited – All rights reserved

10.2 After placement of order, the Manufacturer shall submit the following drawings, documents and specifications for Company's approval***:***

a. General arrangement & detailed sectional drawings showing all parts with reference numbers and material specifications, overall dimensions and features. Number of turns of hand wheel required for operating the valve from full open to full close position for Gear Operated valves, painting/ coating scheme, Complete dimensional details of support foot (where applicable), shall be indicated in the GA.

Manufacture of valves shall commence only after approval of the above documents. Once the approval has been given by Company, any changes in design, material and method of manufacture shall be notified to Company whose approval in writing of all changes shall be obtained before the valve is manufactured.

10.3 Within 30 days from the approval date, Manufacturer shall submit to Company the approved drawings, documents and specifications as listed in clause 10.2 above.

10.4 Prior to shipment, Manufacturer shall submit to Company following:

a. Test certificates as per clause 6.0 of this specification.

b. Manual for installation, erection, maintenance and operation instructions including a list of recommended spares for the valves.

10.5 All documents shall be in English language only.

Copyright VCS Quality Services Private Limited – All rights reserved

ABOVE GROUND INSTALLATION

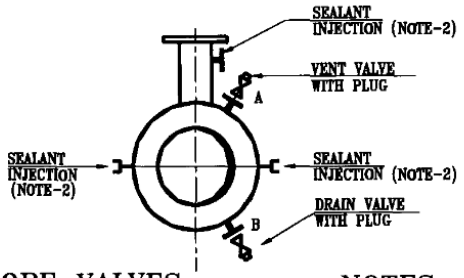

FULL BORE VALVES

VALVE SIZE, DN(mm)	A, DN(mm)	B, DN(mm)
50 TO 150	–	15
200 TO 600	15	25
650 & ABOVE	15	40

REDUCED BORE VALVES

VALVE SIZE, DN(mm)	A, DN(mm)	B, DN(mm)
50 TO 200	–	15
250 TO 750	15	25
ABOVE 750	15	40

NOTES:–

1 ALL VALVES (BALL OR PLUG) AND PLUGS FOR A AND B SHALL BE APPROVED BY THE PURCHASER.

2 SEALANT POINTS SHALL BE PROVIDED FOR FULL BORE VALVES OF NOMINAL VALVE SIZE 200 mm (8") & ABOVE AND REDUCED BORE VALVES OF NOMINAL VALVE SIZE, DN 250 mm (10") AND ABOVE ONLY. SEALANT LINES SHALL HAVE PROVISION TO REPLACE THE SEALANT INJECTION FITTING UNDER FULL LINE PRESSURE. SEALANT LINES SHALL HAVE BLOCK VALVE & INTERNAL NON RETURN VALVE.

3 ALL VENT/DRAIN CONNECTION SHALL BE WELDED WITH THE BODY.

UNDERGROUND INSTALLATION

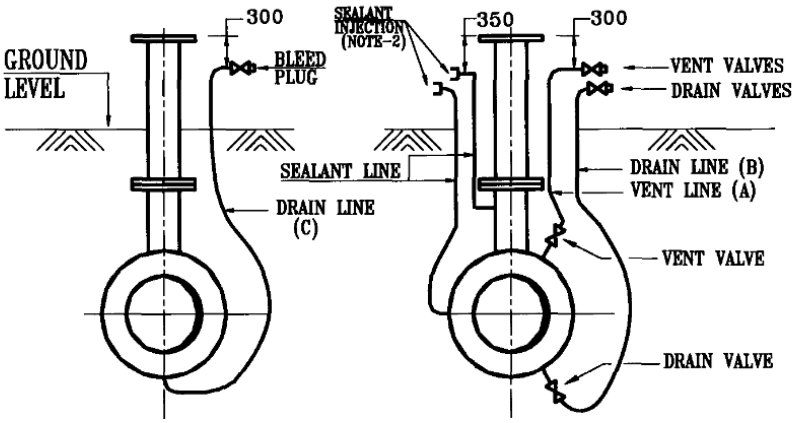

FB VALVES DN 50 mm(2") TO DN 150 mm(6") FB VALVES ≥ DN 200 mm(8")
RB VALVES DN 50 mm(2") TO DN 200 mm(8") RB VALVES ≥ DN 250 mm(10")

FULL BORE (FB) VALVES

VALVE SIZE, DN(mm)	A, DN(mm)	B, DN(mm)	C, DN(mm)
50 TO 150	–	–	15
200 TO 300	25	25	–
350 TO 600	25	25	–
650 & ABOVE	40	40	–

REDUCED BORE (RB) VALVES

VALVE SIZE, DN(mm)	A, DN(mm)	B, DN(mm)	C, DN(mm)
50 TO 200	–	–	15
250 TO 400	25	25	–
450 TO 750	25	25	–
800 & ABOVE	40	40	–

NOTES:–

1 ALL VALVES (BALL OR PLUG) AND PLUGS FOR A AND B SHALL BE APPROVED BY THE PURCHASER.

2 SEALANT POINTS SHALL BE PROVIDED FOR FULL BORE VALVES OF NOMINAL VALVE SIZE 200 mm (8") & ABOVE AND REDUCED BORE VALVES OF NOMINAL VALVE SIZE, DN 250 mm (10") AND ABOVE ONLY. SEALANT LINES SHALL HAVE PROVISION TO REPLACE THE SEALANT INJECTION FITTING UNDER FULL LINE PRESSURE. SEALANT LINES SHALL HAVE BLOCK VALVE & INTERNAL NON RETURN VALVE.

3 ALL VENT/DRAIN CONNECTION IN BURIED SECTION SHALL BE OF WELDED CONSTRUCTION. ALL PIPING INCLUDING VALVE ENDS IN BURIED PORTIONS OF VENT & DRAIN SHALL BE WELDED TYPE.

FIGURE-4.9

Copyright VCS Quality Services Private Limited – All rights reserved

ENERGISING QUALITY

VCS QUALITY SERVICES PVT. LTD.

STANDARD SPECIFICATION
FOR
ASSORTED PIPES

VPC – SS – PP - 2503

00	**28.01.2020**	**MB**	**AK**	**AD**	**SK**
Rev. No	**Date**	**Prepared By**	**Checked By**	**Approved By**	**Authorized By**

UNCONTROLLED COPY	:	**If printed**
CONTROLLED COPY	:	**If in soft and signed**

Copyright VCS Quality Services Private Limited – All rights reserved

REVISION RECORD						
Rev.	**Revision Date**	**Prepared by**	**Checked by**	**Approved by**	**Authorized by**	**Revision Description**
00	28.01.2020					
		MB	AK	AD	SK	

Copyright VCS Quality Services Private Limited – All rights reserved

ABBREVIATIONS:

ANSI	American National Standards Institute
API	American Petroleum Institute
ASME	American Society of Mechanical Engineers
ASTM	American Society for Testing & Materials
BHN	Brinell Hardness Number
BIS	Bureau of Indian Standards
E.FS.W	Electric Fusion Weld
E.R.W	Electric Resistance Weld
HAZ	Heat Affected Zone
HIC	Hydrogen Induced Cracking
IBR	Indian Boiler Regulations
IGC	Inter Granular Corrosion
IS	Indian Standard
LT	Low Temperature
MR	Material Requisition
NACE MR	National Association of Corrosion Engineers : Material Requirement
NB	Nominal Bore
NPT	Nominal Pipe Thread
PMI	Positive Material Identification
PR	Purchase Requisition
SMYS	Specified Minimum Yield Strength
SS	Stainless Steel

Copyright VCS Quality Services Private Limited – All rights reserved

CONTENTS

1.0 GENERAL……1

2.0 IBR PIPES……7

3.0 ACCEPTABLE DEVIATION……..……... . 8

4.0 HYDROSTATIC TEST……..……..……8

5.0 MARKING AND DESPATCH……..11

Copyright VCS Quality Services Private Limited – All rights reserved

1. GENERAL

1.1. All pipes and their dimensions, tolerances, chemical composition, physical properties, heat treatment, hydrostatic test and other testing and marking requirements shall conform to the latest codes and standards specified in the material requisition (MR). Supplier shall strictly comply with MR/ PR stipulations and no deviations shall be permitted.

1.2. Testing

1.2.1. Test reports shall be supplied for all mandatory tests as per the applicable material specifications. Test reports shall also be furnished for any supplementary tests as specified in the MR & Clauses 1.10 & 1.11.

1.2.2. Material test certificates (physical property, chemical composition & heat treatment report) shall also be furnished for the pipes supplied.

1.2.3. PMI shall be performed as per the scope and procedures at supplier`s work.

1.3. Manufacturing Processes

1.3.1. Steel made by acid Bessemer process shall not be acceptable.

1.3.2. All longitudinally welded pipes should employ only automatic welding.

1.4. Pipe shall be supplied in single or double random length of 4 to 7 and 7 to 14 meters respectively.

1.5.

a. Seamless and E.R.W. pipes shall not have any circumferential seam joint in a random length. However, in case of E.FS.W pipe, in one random length one welded circumferential seam of same quality as longitudinal weld is permitted. This weld shall be at least 2.5 m from either end. The longitudinal seams of the two portions shall be staggered by 90°. Single random length in such cases shall be 5 to 7 m.

b. Unless otherwise mentioned in the respective material code, E.FS.W pipes < 36" shall not have more than one longitudinal seam joint and E.FS.W pipes ≥ 36" shall not have more than two longitudinal seam joints.

1.6. Pipe with screwed ends shall have NPT external taper pipe threads conforming to ASME/ANSI B1.20.1 up to 1.5" NB & IS 554 for 2" to 6" NB.

1.7. Pipe with beveled ends shall be in accordance with ASME B16.25. Weld contours shall be as follows

Copyright VCS Quality Services Private Limited – All rights reserved

Material	Wall Thickness	Weld Contour
Carbon Steel Except Low Temp. Carbon Steel	Up to 22 mm	Figure 2 Type A
	> 22 mm	Figure 3 Type A
Alloy Steel, Stainless Steel & Low Temp. Carbon Steel	Up to 10 mm	Figure 4
	> 10 mm & Up to 25 mm	Figure 5 Type A
	> 25 mm	Figure 6 Type A

1.8. Galvanized pipes shall be coated with zinc by hot dip process conforming to IS 4736 / ASTM A 153.

1.9. All austenitic stainless steel pipes shall be supplied in solution annealed condition. All types of 321 or 347 stainless steel pipes shall be in a stabilized heat treated condition. Stabilizing heat treatment shall be carried out subsequent to the normal solution annealing. Soaking time & holding temp. for stabilizing heat treatment shall be 4 hrs & 900°C respectively.

1.10. **I.G.C. (Inter Granular Corrosion) Test for Stainless Steels**

1.10.1. For all austenitic stainless steel pipes inter-granular corrosion test shall have to be conducted as per following:
ASTM A262 Practice "B" with acceptance criteria of "60 mils/year (max.)".

OR

ASTM A262 Practice E with acceptance criteria of no cracks at 20X magnification and microstructure to be observed at 250X magnification shall ensure the absence of any cracks/ fissures. When testing is conducted as per practice 'E' photograph of microstructure shall be submitted for record.

1.10.2. When specifically asked for in MR for high temperature application of some grades of austenitic stainless steel (eg.SS 309, 310, 316, 316H etc.) ASTM A262 Practice "C" with acceptance criteria of "15 mils/year (max.)" shall have to be conducted

1.10.3. For the IGC test as described in 1.10.1 & 1.10.2, two sets of samples shall be drawn from each solution annealing lot; one set corresponding to highest carbon content and the other set corresponding to the highest pipe thickness.

1.11. All welded pipes indicated as `CRYO' & 'LT' in MR shall be impact tested per requirement & acceptance criteria of ASME B31.3. The impact test temperature shall be -196°C & -45°C for stainless steel and carbon steel respectively unless specifically mentioned otherwise in MR.

1.12. **NACE/HIC Requirements**

Copyright VCS Quality Services Private Limited – All rights reserved

1.12.1. Pipes under "NACE" category and those designated as "HIC1" shall meet the requirements given in NACE MR-0103 unless mentioned otherwise.

1.12.2. Pipes made from plates and designated as "HIC1" shall meet the HIC requirements of specification unless mentioned otherwise

1.13. Specified heat treatment for carbon steel and alloy steel and solution annealing for stainless steel pipes shall be carried out after weld repairs. Number of weld repairs at the same spot shall be restricted to maximum two by approved repair procedure.

1.14. For black or galvanized pipes to IS 1239, the minimum percentage of elongation shall be 20%.

1.15. All 1Cr-1/$_2$Mo and 1 ¼ Cr-1/$_2$Mo seamless pipes shall be normalised and tempered.

1.16. For all welded alloy steel pipes with mandatory requirement of heat treatment and radiography, radiography shall be performed after heat treatment.

1.17. For Hydrogen service pipes following special requirements shall also be met:

1.17.1. All carbon steel pipes having wall thickness 9.53 mm (0.375") and above shall be normalized. Cold drawn pipes shall be normalized after the final cold draw pass for all thicknesses.

1.17.2. All alloy steel (Cr-Mo) pipes shall be normalized and tempered. The normalising and tempering shall be a separate heating operation and not a part of the hot forming operation. The maximum room temperature tensile strength shall be 100,000 psig.

1.17.3. For carbon steel Pipes, hardness of weld and HAZ shall be 200 BHN (max.). For alloy steel Pipes, hardness of weld and HAZ shall be 225 BHN (max.).

1.17.4. For all austenitic stainless steels, the weld deposit shall be checked for ferrite content. A Ferrite No.(FN) not less than 3% and not more than 10% is required to avoid sigma phase embrittlement during heat treatment. FN shall be determined by Ferritescope prior to post weld heat treatment.

1.17.5. For all Carbon steel and Alloy steel pipes with wall thickness over 20mm, Charpy-V Notch impact testing shall be carried out in accordance with paragraph UG-84 of ASME Section VIII, Div-1 for weld metal and base metal from the thickest item per heat of material and per heat treating batch. Impact test specimen shall be in complete heat treated condition and accordance with ASTM A370. Impact energies at 0°Celsius shall average greater than 27J (20 ft-lb) per set of three specimens, with a minimum of 19J (15 ft-lb).

1.18. For dual grades of SS where specified, chemical composition and mechanical

Copyright VCS Quality Services Private Limited – All rights reserved

properties of both grades specified shall be ensured.

2. IBR PIPES

2.1. IBR Documentation

2.1.1. Pipes under purview of IBR shall be accompanied with IBR certificate original in Form III-A duly approved and countersigned by IBR authority/local authority empowered by the Central Boiler Board of India (Photocopy of the original certificate duly attested by the local boiler inspector where the supplier is located is the minimum requirement for acceptance) or Form III-D [for well-known pipe manufacturers as per IBR] signed by Manufacturer's authorized representative. Well known pipe manufacturers, as recognized by IBR, shall submit a duly attested copy of Form XVI-G along with Form III-D.

2.1.2. For materials 1¼ Cr - ½ Mo (ASTM A335 Gr.P11 / A691 Gr. 1¼Cr), 2¼Cr - 1Mo (ASTM A335 Gr.P22 / A691 Gr. 2¼Cr) & 9Cr -1Mo-V (A335 Gr.P91/A691 Gr.91), Form III-A approved by IBR shall include the tabulation of Et, Sc & Sr values for the entire temperature range given below. Et, Sc & Sr values shall be such that throughout the temperature range

$$\left.\begin{array}{l} E_t/1.5 \geq \\ S_r/1.5 \geq \\ S_c \geq \end{array}\right| S_A$$

where,

S_A Allowable stress at the working metal temperature.

E_t Yield point (0.2% proof stress at the working metal temperature)

S_c The average stress to produce elongation of 1%(creep) in 100000 hrs at the working metal temperature.

S_r The average stress to produce rupture in 100000 hrs at the working metal temperature and in no case more than 1.33 times the lowest stress to produce rupture at this temperature

SA (psi)												
Temp (°F) Material	**500**	**600**	**650**	**700**	**750**	**800**	**850**	**900**	**950**	**1000**	**1050**	**1100**
A335 Gr.P11	17200	16700	16200	15600	15200	15000	14500	12800	9300	6300	4200	2800
A691	18900	18300	18000	17600	17300	16800	16300	15000	9900	6300	4200	2800

Copyright VCS Quality Services Private Limited – All rights reserved

SA (psi)												
Temp (°F) Material	**500**	**600**	**650**	**700**	**750**	**800**	**850**	**900**	**950**	**1000**	**1050**	**1100**
Gr. 1¼ Cr												
A335 Gr.P22 / A691 Gr. 2¼ Cr	17900	17900	17900	17900	17900	17800	14500	12800	10800	7800	5100	3200
A335 Gr.P91/ A691 Gr.91	28100	27700	27300	26700	25900	24900	23700	22300	20700	18000	14000	10300

Note : S_A values shall be as per the latest edition prevailing.

2.2. For carbon steel pipes under IBR the chemical composition shall conform to the following:

Carbon (max) : 0.25%

Others (S, P, Mn) : As prescribed in IBR.

The chemical composition as indicated in this clause is not applicable for pipes other than IBR services.

3. ACCEPTABLE DEVIATIONS

3.1. Pipes to IS 3589 Gr.410 are acceptable in place of IS 3589 Gr.330.

3.2. Pipes of Grades SS317 of corresponding material are acceptable in place of Grades SS316 or SS316(2.5 Mo min.).

3.3. Pipes of Grades SS317L of corresponding material are acceptable in place of Grades SS316L or SS316L(2.5Mo min.).

3.4. Seamless pipes are acceptable in place of welded pipes except in the case of welded

SS321/SS321H pipes with nominal thickness greater than 9.53mm.

4. HYDROSTATIC TEST

4.1. All pipes shall be hydrostatically tested.

4.2. The mill test pressure shall be as follows:

4.2.1. Seamless, E.R.W. & Spiral Welded

a) Carbon Steel

Copyright VCS Quality Services Private Limited – All rights reserved

Material Std.	**Test Pressure Std.**
ASTM A106 Gr.B	ASTM A530
A*PI* 5L Gr.B, Seamless	API 5L
API 5L, E.R.W.	API 5L
API 5L, Spiral	API 5L
ASTM A333 Gr.3 & 6, Seamless	ASTM A530
ASTM A333 Gr.3 & 6, E.R.W.	ASTM A530

b) Seamless Alloy Steel

Material Std.	**Test Pressure Std.**
ASTM A335 Gr.P1, P12, P11, P22, P5, P9	ASTM A530
ASTM A268 TP 405, TP410	ASTM A530

c) Seamless Stainless Steel

Material Std.	**Test Pressure Std.**
ASTM A312 Gr.TP 304, 304L, 304H, 316, 316L, 316H, 321, 347.	ASTM A999

d) Seamless Nickel Alloy

Material Std.	**Test Pressure Std.**
ASTM B161 UNS No. 2200	ASTM B161
ASTM B165 UNS No. 4400	ASTM B165
ASTM B167 UNS No. 6600	ASTM B167
ASTM B407 UNS No. 8800	ASTM B407

e) Welded Nickel Alloy

Material Std.	**Test Pressure Std.**
ASTM B725 UNS No. 2200,4400	ASTM B725
ASTM B517 UNS No. 6600	ASTM B517

Copyright VCS Quality Services Private Limited – All rights reserved

ASTM B514 UNS No. 8800	ASTM B514

4.2.2. Electric Fusion Weld

a) Carbon Steel & Alloy Steel E.FS.W (16” & above)

Material Std	Test Pressure Std.
API 5L Gr.B ASTM A671 Gr.CC65, 70 (Cl.32) ASTM A672 Gr.C60, 65, 70 (Cl.12,22) ASTM A671 Gr.CF60, 65, 66, 70 (Cl.32) ASTM A691 Gr. ½ Cr, 1Cr, 1¼ Cr, 2¼ Cr, 5Cr, 9Cr (Cl.42)	P = 2ST/D S = 90% of SMYS Except for API 5L Gr.B S = 85% of SMYS For API 5L Gr.B T = Nominal Wall Thickness D = O.D of Pipe

b) Stainless Steel E.FS.W (2” to 6”)

The hydrostatic test pressure in kg/cm^2 for the following materials shall be as given below :

Material Gr.1 :ASTM A312 TP 304 / 304H / 316 / 316H / 321 / 347 welded.

Material Gr.2 :ASTM A312 TP 304L / 316L welded.

Size	Pipe Schedule : 10S		Pipe Schedule : 40S		Pipe Schedule : 80S	
	Material Gr. 1	Material Gr.2	Material Gr.1	Material Gr.2	Material Gr.1	Material Gr.2
2”	100	80	155	130	230	190
3”	80	60	155	130	230	190
4”	80	50	155	130	230	190
6”	65	35	90	75	155	130

c) Stainless Steel E.FS.W (8" and above).

Material Std	Test Pressure Std.
ASTM A358 TP 304L, 304, 304H, 316L,316, 316H, 321, 347 (Classes 1, 3 & 4)	P = 2ST/D S = 85% of SMYS T = Nominal Wall Thickness D = O.D of Pipe

Copyright VCS Quality Services Private Limited – All rights reserved

ASTM A358 TP 304L, 304, 304H, 316L, 316, 316H, 321, 347 (Classes 2 & 5)	P = 2ST/D S = 72% of SMYS T = Nominal Wall Thickness D = O.D of Pipe

4.2.3. Carbon Steel Pipe to BIS Standards

Material Std	**Test Pressure Std.**
IS 1239	IS 1239
IS 3589	IS 3589

4.3. Hydrostatic pressure testing shall be performed using iron free water, which is clean and free of silt. Maximum chloride content in water for hydrostatic testing for SS piping shall be 50 ppm.

5. MARKING AND DESPATCH

5.1. All pipes shall be marked in accordance with the applicable codes, standards and specifications. In addition the purchase order number, the item code & special conditions like "IBR", "CRYO", "NACE", "H2" etc. shall also be marked.

5.2. Pipes under "IBR","CRYO", "NACE" & "H2" shall be painted with one circumferential stripe of colour red, light purple brown, canary yellow & white respectively for easy identification. Width of stripe shall be 12mm for pipe sizes less than 3" and 25mm for pipes 3" and above.

5.3. Paint or ink for marking shall not contain any harmful metal or metallic salts such as zinc, lead or copper which cause corrosive attack on heating.

5.4. Pipes shall be dry, clean and free from moisture, dirt and loose foreign materials of any kind.

5.5. Pipes shall be protected from rust & corrosion

5.6. Rust preventive used on machined surfaces to be welded shall be easily removable with a petroleum solvent and the same shall not be harmful to welding.

5.7. Both ends of the pipe shall be protected with the following material:

Plain end : Plastic cap

Bevel end : Wood, Metal or plastic cover

Threaded end : Metal or plastic threaded cap

5.8. Pipes may be provided with plastic push-fit type end caps/ steel caps without belt wire.

Copyright VCS Quality Services Private Limited – All rights reserved

5.9. Steel end protectors to be used on galvanized pipes shall be galvanized. Plastic caps can also be used as end protectors for galvanised pipe ends.

Copyright VCS Quality Services Private Limited – All rights reserved

ENERGISING QUALITY

VCS QUALITY SERVICES PVT.LTD.

STANDARD SPECIFICATION
FOR
ASSORTED VALVES

VPC – SS – PP - 2504

00	**28.01.2020**	**MB**	**AK**	**AD**	**SK**
Rev. No	**Date**	**Prepared By**	**Checked By**	**Approved By**	**Authorized By**

UNCONTROLLED COPY	:	**If printed**
CONTROLLED COPY	:	**If in soft and signed**

Copyright VCS Quality Services Private Limited – All rights reserved

REVISION RECORD						
Rev.	**Revision Date**	**Prepared by**	**Checked by**	**Approved by**	**Authorized by**	**Revision Description**
00	28.01.2020					
		MB	AK	AD	SK	

Copyright VCS Quality Services Private Limited – All rights reserved

ABBREVIATIONS:

AARH	:	Arithmetic Average Roughness Height
ANSI	:	American National Standards Institute
API	:	American Petroleum Institute
ASME	:	American Society of Mechanical Engineers
ASTM	:	American Society for Testing & Materials
BGO	:	Bevel Gear Operator
BHN	:	Brinnel Hardness Number
BIS	:	Bureau of Indian Standards
BS	:	British Standard
BVIS	:	Bureau Veritas Industrial Services
BW	:	Butt Weld
CAT	:	Category
CS	:	Carbon Steel
DFT	:	Dry Film Thickness
DNV	:	Det Norske Veritas
DP	:	Dye-Penetrant
IBR	:	Indian Boiler Regulations
IGC	:	Inter Granular Corrosion
IS	:	Indian Standard
LT	:	Low Temperature
LTCS	:	Low Temperature Carbon Steel
MOV	:	Motor Operated Valve
MP	:	Magnetic Particle
MR	:	Material Requisition
NDT	:	Non Destructive Testing
PM	:	Positive Material Identification
PO	:	Purchase Order
PR	:	Purchase Requisition
RFQ	:	Request for Quotation
SCRD	:	Screwed
SS	:	Stainless Steel
SW	:	Socket Weld

Copyright VCS Quality Services Private Limited – All rights reserved

CONTENTS

1. GENERAL 5
2. DOCUMENTATION 5
3. DESIGN AND CONSTRUCTION 5
4. OPERATION 9
5. INSPECTION AND TESTING 10
6. RADIOGRAPHY OF CAST VALVES 11
7. IBR CERTIFICATION 11
8. MARKING 12
9. DESPATCH 12
10. ATTACHMENTS 12

Copyright VCS Quality Services Private Limited – All rights reserved

1. GENERAL

1.1 Vendor shall supply valves in accordance with the valve specification sheets along with auxiliaries, if any, such as gear operator, bypasses, drains, locking arrangements etc. wherever specified in the specification sheets, subject notes and other enclosures to the material requisition (MR).

1.2 Vendor shall quote in strict accordance with the valve data/ specification sheets, subject technical notes and all other enclosures to the MR. For all valves, no deviations whatsoever shall be accepted.

1.3 All codes and standards for manufacture, testing, inspection etc. shall be of latest editions as on issue date of Material Requisition.

2. DOCUMENTATION

2.1 For all valves, vendor shall submit the following documents with the offer:

2.1.1 Manufacturers complete descriptive and illustrative catalogue/ literature.

2.1.2 Detailed dimensioned cross section drawing with parts/ material lists, weight etc.

2.1.3 Drawings for valves with accessories like gear operator, hydraulic/ pneumatic operator, motor, extension bonnet, extended stems with stands, bypass etc. giving major salient dimensions.

2.1.4 One copy of the valve specification sheets signed as "Accepted" by the manufacturer. Deviations, if any shall be marked as applicable on the valve specification sheet.

2.1.5 If the valve is regretted or has no deviation, the manufacturer shall write clearly on valve specification sheets as "Regret" or "No Deviation".

2.1.6 On failure to submit documents as specified in clauses 2.2.1 to 2.2.6 above, the offer is likely to be rejected.

2.2 The following documents shall be submitted in soft and hard copy after placement of the order.

2.2.1 For all valves to manufacturers' standard specified in MR/valve specification sheet, detailed dimensioned cross section drawing with parts, materials, weight, etc. shall be submitted for records/information/ review.

2.2.2 Test report shall be supplied for all mandatory tests as per the applicable code. Test reports shall also be furnished for any supplementary tests as specified in clauses 3.15.

2.2.3 Material test certificates (physical properties, chemical composition & heat treatment report) of the pressure containing parts shall be furnished for the valves supplied. Material test certificates for the other parts shall also be furnished for verification during inspection.

2.3 Catalogues/Drawings (6 sets) shall be submitted in hard copies (6 sets) and soft copies (2 CDs/DVDs) along with delivery for Purchaser’s record for all categories/ types of valves.

3. DESIGN AND CONSTRUCTION

3.1 Valve shall be designed, manufactured, tested, inspected and marked as per the manufacturing standards, design codes and standards indicated in the respective valve specification sheets. Any conflict between the requisition, enclosures, specification

Copyright VCS Quality Services Private Limited – All rights reserved

sheets and referred standards/ codes shall be brought to the notice of the purchaser for clarifications and resolution, before proceeding with the manufacture. The purchaser's decision shall be final and binding to the vendor. The drawings submitted for review shall not include any deviations except as communicated in writing in Deviation permits. The Drawings shall be reviewed only for design and construction features.

3.2 All flanged valves shall have flanges integral (except forged valves) with the valve body. Flange face finish shall be normally specified in the valve specification sheet as 125 AARH etc. The interpretation for range of face finish shall be as follows:

Stock Finish	:	1000 p. in AARH max.
125 AARH	:	Serrations with 125 to 250 p in AARH
63 AARH	:	32 to 63 p. in AARH

3.3 For all weld end valves with bevel end as per ASME B 16.25, the contour of bevel shall be as follows:

Material	**Wall Thickness**	**Weld Contour**
Carbon Steel (Except Low Temp. Carbon Steel)	Upto 22 mm	Figure 2 Type A
	> 22 mm	Figure 3 Type A
Alloy Steel,Stainless Steel &Low Temp. Carbon Steel	Upto 10 mm	Figure 4
	> 10 mm & Upto 25 mm	Figure 5 Type A
	> 25 mm	Figure 6 Type A

Valve ends shall match thickness of the connecting pipe. Sloping of inside contour of valves shall be done wherever necessary to achieve this.

3.4 For flanged valves with ring joint flanges the hardness shall be as follows:

Flange Material	**Min. Hardness of Groove (BHN)**
Carbon Steel	140
1% Cr to 5% Cr, 9% Cr	150
Type 304, 316, 321, 347	160
Type 304L, 316L	140

3.5 Following requirements for check valves shall be met over and above the valve specification sheet requirements:

3.5.1 Unless specified otherwise in the data sheet all check valves 3" & above (except in 900#, 1500# & 2500# rating) shall have a drain boss at location "G" (Refer Fig.No.1 of ASME B16.34) where pocket is formed in valve body. A tapped drain hole with plug shall be provided as per ASME B 16.34. Threads shall be as per ASME B 1.20.1 (Taper) NPT.

3.5.2 For heavy check valves, provisions shall be available for lifting by way of lugs, eye bolts and other such standard devices.

Copyright VCS Quality Services Private Limited – All rights reserved

3.6 If an overlay weld-deposit is used for the body seat ring seating surface, the corrosion resistance of the seat ring base material shall be at least equal to the corrosion resistance of the material of the shell.

3.7 Following valve bypass requirements shall be met:

3.7.1 By-pass requirement for Gate valves shall be as follows unless otherwise mentioned.

ASME 150 Class	On sizes 26" and above
ASME 300 Class	On sizes 16" and above
ASME 600 Class	On sizes 6" and above
ASME 900 Class	On sizes 4" and above
ASME 1500 Class	On sizes 4" and above
ASME 2500 Class	On sizes 3" and above

3.7.2 The by-pass piping arrangement shall be such that clearance between main valve body and bypass assembly shall be the minimum possible for layout reasons. Vendor shall follow the sketch enclosed in this Specification No. SS-PI-012_A1.

3.7.3 By-pass valve shall be a globe valve. The sizes shall be as under:

On main valve <= 4"	:	1/2"
On main valve 6" to 8"	:	3/4"
On main valve 10" & above	:	1"

By-pass piping shall be of same metallurgy as main valve. The by-pass piping, fittings and valve tag numbers shall be as specified in Piping Material Specification (PMS).

3.8 Vendor shall supply the by-pass valve duly tested and fitted to the main valve. Valves with by-pass shall have the direction of flow marked on the main valve. By-pass attachment to the main valve body shall not be screwed. All fillet welds for by-pass installation shall be 100% examined by DP/MP test and Butt-weld joints shall be 100% examined by radiography.

3.9 Valve body / bonnet shall be forged / cast as specified. Forgings are acceptable in place of casting but not vice-versa.

3.10 Stem shall be forged or machined from forged / rolled bar. No casting is permitted. However, integral stem of cast material is acceptable for Plug valves.

3.11 Stelliting/ hardfacing by deposition shall be minimum 1.6 mm.

3.12 Renewable seat rings shall be seal welded for valves of size 3" and above to prevent loosening in service.

3.13 For Low Temperature & Cryogenic valve requirements, refer Specification. No. SS-PI-012_A2 unless otherwise specified.

3.14 For all austenitic stainless steel valves Inter Granular Corrosion (IGC) test shall be conducted as per the following:

3.14.1 ASTM A262 Practice 'B' with acceptance criteria of '60 mils/year (max.)' for all

Copyright VCS Quality Services Private Limited – All rights reserved

materials forged, rolled, wrought and casting.

Or

ASTM A262 Practice `E' with acceptance criteria of 'No cracks as observed from 20X magnification' for all materials other than castings. Microscopic structure to be observed from 250X magnification' in addition.

3.14.2 When specifically asked for in MR for high temperature application of some grades of austenitic stainless steel (eg. SS309, 310, 316, 316H etc) ASTM A262 Practice 'C' with acceptance criteria of ' 15 mils/year (max.)' shall be conducted.

3.14.3 For the IGC test as described in Clauses 3.15.1 & 3.15.2, two sets of samples shall be drawn from each solution annealing lot. One set shall correspond to the highest Carbon content and the other to the highest pressure rating. When testing is conducted as per practice `E', of the microscopic structure shall be submitted for record.

3.15 All types of 321 or 347 stainless steel valves shall be in a stabilized heat treated condition. Stabilizing heat treatment shall be carried out subsequent to the normal solution annealing. Soaking temperature and holding time for stabilizing heat treatment shall be 900°C and 4 hours respectively.

3.16 Spiral wound bonnet gaskets are to be provided with inner/ outer ring except when encapsulated gaskets type body-bonnet joints are employed. Outer ring may be avoided case of non-circular spiral wound gasket used in 150# valve provided the outermost layer of spiral touches the bolts ascertaining the centering.

3.17 All Stainless Steel Castings shall be solution heat treated.

3.18 Only normalized and tempered material shall be used in the following specifications:

Castings	:	A217 Gr.WC1, A217 Gr.WC4, A217 Gr.WC5, A217 Gr.WC6, A217 Gr.WC9, A217 Gr.C5, A217 Gr.C12
Forgings	:	A182 Gr.F11 C1.2, A182 Gr.F12 C1.2

3.19 Ball / Plug / Butterfly Valves

3.19.1 As a prequalification, fire safe test as per API 607/ API 6FA/ BS EN ISO 10497 (Supersedes BS 6755 Part II) shall be carried out on soft seated ball, plug & butterfly valves and also on lubricated plug valves The test shall be witnessed and certified by a approved third party inspection agency unless otherwise specified. The vendor has to submit test certificate for the particular design of the valve offered, if fire safe design is required as per the Valve Material Specification sheet.

3.19.2 Each valve shall be supplied with a lever / wrench except for gear operated / motor operated valves.

3.19.3 Soft-seated ball, plug & butterfly valves shall be supplied with antistatic devices.

3.19.4 BW / SW end ball valves shall have pipe nipple/ pup piece welded to each end of the valve. As specified in valve datasheets nipples/ pup piece are to be welded prior to assembling Teflon seats / seals. Specifications of the nipples shall be as indicated in the MR.

3.19.5 The face-to-face dimensions of all ball valves shall be same as those of gate valves of the corresponding ANSI class (except 10" onwards in Class 150 where the face-to-face dimensions shall be as per API 6D long patterns).

Copyright VCS Quality Services Private Limited – All rights reserved

3.19.6 The ball of ball valve shall not protrude outside the end flanges of valve.

3.19.7 All Ball valves shall be of floating ball/ trunnion mounted type as per following:

150#	8" & below 10" & above	Floating ball Trunnion mounted
300#	4" & below 6" & above	Floating ball Trunnion mounted
600# & above	1.5" & below 2" & above	Floating ball Trunnion mounted

3.19.8 Unless otherwise specified in the data sheets/ MR, bore of all reduced bore ball valves shall be limited to one size lower than the nominal bore.

3.20 The MOVs are to be installed in an open area and the actuators shall be suitable for all weather conditions. The testing of complete assemblies of MOVs along with the actuators shall be done by the supplier at his works.

3.21 Ends of flanged valves of 22" size shall match corresponding flanges to MSS-SP44 unless otherwise specified.

3.22 Yoke material shall be same as bonnet material where maximum temperature specified is more than 427°C.

4. OPERATION

4.1 Gear operation shall be provided as under:

Valve Type	**Class**	**Size Requiring Gear-Operator**
Gate Valve, Globe Valve & Diaphragm Valve	150 Class	12" and larger
	300 Class	12" and larger
	600 Class	10" and larger
	900 Class	6" and larger
	1500 Class	3" and larger
	2500 Class	3" and larger
Ball Valve / Plug Valve (Other than pressure balance plug valves)	150 Class	6" and larger
	300 Class	6" and larger
	600 Class	4" and larger
	900 Class	3" and larger
	1500 Class	3" and larger
Butterfly Valve	150, 300 Class	6" and larger

For sizes lower than these ranges, hand wheel / lever / wrench shall be provided. For pressure balance plug valves manufacturer's recommendation shall be acceptable provided the requirements specified in clause 4.6 are met.

Copyright VCS Quality Services Private Limited – All rights reserved

4.2 Gear operator shall be provided, with position indicators for open / close positions and with limit stops. (Limit stops are not applicable for gate and globe valves).

4.3 Where gear operator is not called for as per Clause 4.1 but vendor recommends a gear operator, the same shall be highlighted.

4.4 Gear operator shall be so designed as to operate effectively with the differential pressure across the closed valve equal to the cold non-shock pressure rating.

4.5 Ball, plug and butterfly valves, shall have "Open" position indicators with limit stops.

4.6 Hand wheel diameter shall not exceed 750mm and lever length shall not exceed 500mm on either side. Effort to operate shall not exceed 35 Kg at hand wheel periphery. However, failing to meet the above requirements, vendor shall offer gear operated valve and quote as per clause 4.3.

5. INSPECTION AND TESTING

5.1 Every valve shall be subjected to all the mandatory tests and checks called in the respective codes/ data sheet by any third party as approved by the purchaser. For IBR valves refer clause 7.0.

5.2 Every valve, its components and auxiliaries must be subjected to all the mandatory tests and checks called for in the respective codes, data sheets etc. by the manufacturer.

5.3 Though the extent of inspection shall be as under, exact extent withhold points shall be decided by company/ company representative and recorded in the form of inspection plan. In case of third party inspection, the inspection plan shall be approved by the purchaser.

Forged Valves:

1. Visual and dimensional inspection.
2. Review of material test certificates.
3. Any mandatory or supplementary test.
4. Hydrostatic test on 10% valves selected on random basis.
5. Strip check is required for 1% of total ordered quantity of Gate & Globe valves (min. 1 No.) for each Valve sheet no., however, strip check is not required for CS/ Brass/ Bronze material valves with 13% Cr/ Brass/ Bronze trims.

Cast Steel Valves:

1. Visual and dimensional inspection.
2. Review of material test certificates.
3. Review of radiographs/radiographic reports or any other NDT tests wherever applicable as per data sheet.
4. Any mandatory or supplementary test.
5. Hydrostatic test 100% for body, 10% other test.
6. Strip check is required for 1% of total ordered quantity of Gate & Globe valves (min. 1 No.) for each Valve sheet no., however, strip check is not required for CS/ Brass/ Bronze material valves with 13% Cr/ Brass/ Bronze trims.

Samples for strip check shall be selected at random and shall generally be in the highest size in the lot.

Copyright VCS Quality Services Private Limited – All rights reserved

5.4 In case of motor operated or actuator operated valves, functional/ operational checks as per the requirements of the specifications shall be made on each valve.

6. RADIOGRAPHY OF CAST VALVES

6.1 Valve castings shall undergo radiographic examination as specified below.

Material	Rating	Size Range	Radiography
All	150#	24" and below	NIL**
		26" and above*	100%
	300#	16" and below	NIL**
		18" and above	100%
	600# & above	All sizes	100%

* No radiography is required for valves of size 26" and above in cooling water service.

**For sizes 24" & below in 150# and 16" & below in 300#, radiography percentage if specifically mentioned in individual valve material spec sheet shall govern.

Radiography specified as random 10% or 20% etc. in the respective valve data sheet implies 10% or 20% etc. of number of valves ordered against each item number with a minimum of one valve against each item.

6.2 Radiography procedure, areas of casting to be radiographed shall be as per ASME B 16.34 and acceptance criteria shall be as per ASME B 16.34 Annexure-B. However for areas of casting to be radiographed for types of valves not covered in ASME B 16.34, vendor shall radiograph castings in line with ASME B 16.34.

6.3 For random radiography wherever specified in individual data sheets, the sampling shall be per size of the quantity ordered for each foundry.

6.4 Radiography wherever specified in the data sheets or as per clause 6.1 shall be done by X-ray / Gamma-ray to get the required sensitivity.

7. IBR CERTIFICATION

7.1 For valves described "IBR", valves shall be in accordance with the latest IBR (Indian Boiler Regulation) including the requirements specified in the specification.

7.2 For SW / BW end carbon steel valves under IBR, the chemical composition shall conform to the following:

Carbon (Max)	:	**0.25%**
Others (S, P, Mn)	:	**As per IBR**

7.3 Valves coming under the purview of "IBR"(Indian Boiler Regulations) shall each be individually accompanied by IBR certificate original in Form III-C duly approved by IBR authority / local authority empowered by the Central Boiler Board of India. Photocopy

Copyright VCS Quality Services Private Limited – All rights reserved

of original certificate duly attested by the local boiler inspector where the supplier is located is the minimum requirement for acceptance.

7.4 All "IBR" valves shall be painted red in body-bonnet / body-cover joint.

8. MARKING

8.1 Valve markings, symbols, abbreviations etc. shall be in accordance with MSS-SP-25 or the standard referred in specification sheet as applicable. Vendor's name, valve rating, material designation, nominal size, direction of flow (if any) etc. shall be integral on the body.

8.2 Each valve shall have a corrosion resistant tag giving size, valve tag / code no., securely attached to the valve body.

8.3 Paint or ink for marking shall not contain any harmful metal or metal salts such as zinc, lead or copper which cause corrosive attack on heating.

8.4 Carbon Steel / Alloy Steel valves shall be painted with one coat of inorganic zinc silicate (minimum DFT 65 to 75 microns).

9. DESPATCH

9.1 Valve shall be dry, clean and free from moisture, dirt and loose foreign materials of any kind.

9.2 Valves shall be protected from rust, corrosion and any mechanical damage during transportation, shipment and storage.

9.3 Rust preventive on machined surfaces to be welded shall be easily removable with a petroleum solvent or shall not be harmful to welding.

9.4 Each end of valve shall be protected with the following materials:

Flange Face	:	Wood or Plastic Cover
Bevelled End	:	Wood or Plastic Cover
SW & SCRD. End	:	Plastic Cap

9.5 End protectors of wood / plastic to be used on flange faces shall be attached by at least three bolts and shall not be smaller than the outside diameter of the flange. However, plastic caps for SW & SCRD end valves shall be press fit type.

9.6 End protectors to be used on beveled end shall be securely and tightly attached.

9.7 For special service valves additional requirement for despatch shall be as prescribed in data sheet.

10. ATTACHMENTS

SS-PI-012_A1	:	Bypass Piping Arrangement
SS-PI-012_A2	:	Special Requirements for Low Temperature and Cryogenic Valves

Copyright VCS Quality Services Private Limited – All rights reserved

BYPASS PIPING ARRANGEMENT
(SS-PI-012-A1)

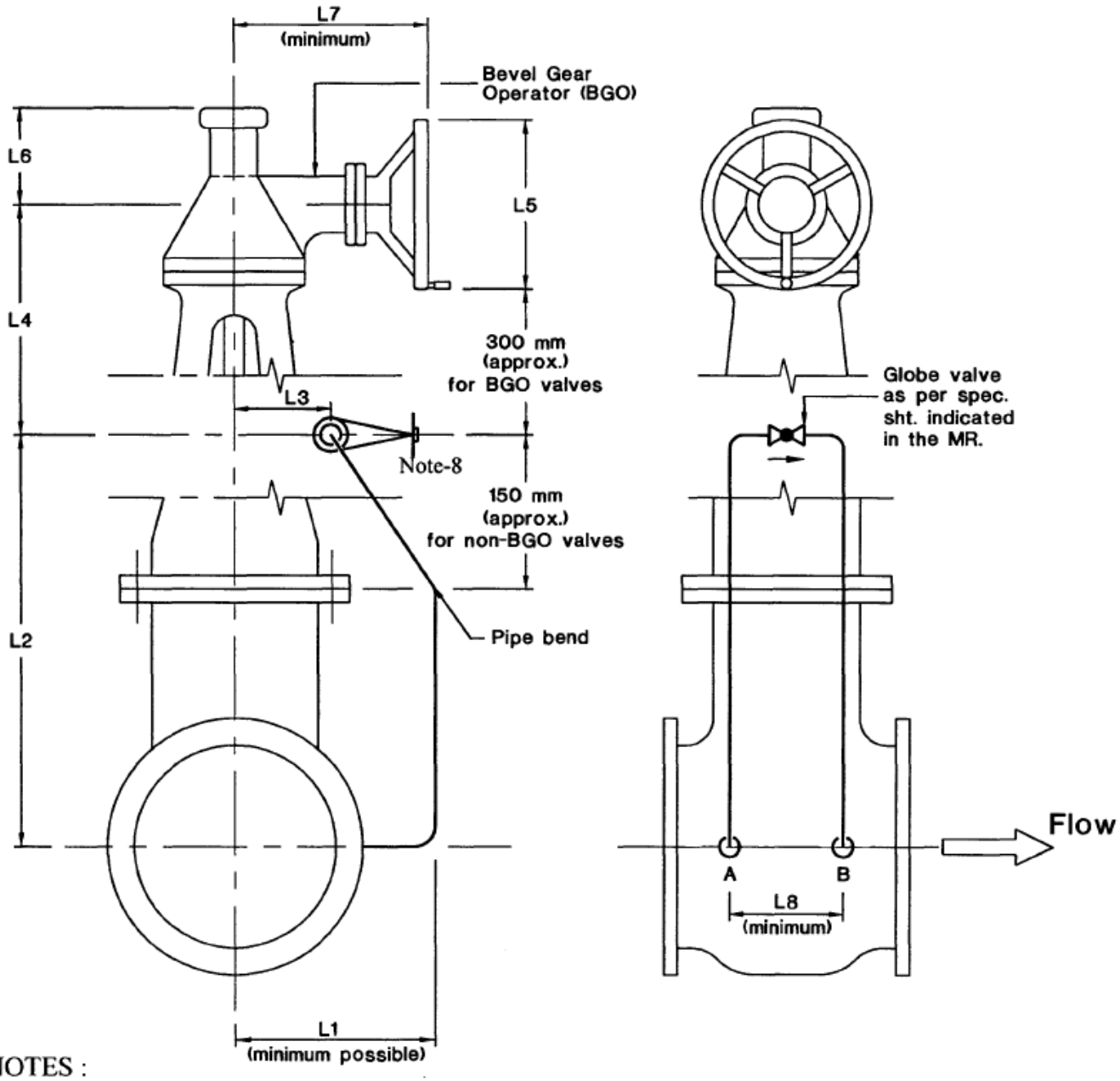

NOTES :

1. The orientation & location of hand wheel of bevel gear operator & the bypass arrangement shall be strictly as per this sketch.
2. The bypass connection ends shall be socket welded up to 600# and butt welded for 900#and above rating.
3. The bypass arrangement shall be properly clamped to & supported by the body of the main valve.
4. Basic design of bypass shall be to MSS-SP-45.
5. Material of bypass pipe & 90° elbows shall be same or equivalent to the body material.
6. Sketch is applicable for both BGO & NON-BGO Valves.

Copyright VCS Quality Services Private Limited – All rights reserved

7. Vendor shall furnish dimensions L1 to L8.
8. Stem shall not be horizontal in the case of CRYO Valves

Copyright VCS Quality Services Private Limited – All rights reserved

SPECIAL REQUIREMENTS FOR LOW TEMPERATURE & CRYOGENIC VALVES (SS-PI-012-A2)

11. SCOPE

All valves of Low Temperature Carbon Steel (LTCS) and all grades of austenitic (CRYO) materials are categorized as cryogenic valves. All these valves shall have extended bonnet as per BS 6364 except check valves.

Following qualification criteria shall be met by the valve vendors to quote valves for cryogenic services:

12. QUALIFICATION CRITERIA

I. Both cryogenic test (clause 2.1) and reference list (clause 2.2) together shall be for vendor qualification and vendor shall furnish the same, along with his offer.

II. Vendors who do not have cryogenic test reports and reference list covering valves of all materials and ratings required by MR, should confirm / furnish the following for consideration of their offer:

a. Evidence of having conducted successfully at least one cryogenic test as per BS 6364. Test certificate shall be furnished with the offer.

b. Vendor shall confirm to conduct cryogenic test per clauses 2.1 & 2.3 for the remaining valves not later than 12 weeks from the date of purchase order.

c. Vendor shall also furnish reference list for valves supplied for non-cryo service if reference list referred in 2.2.1 does not cover all the sizes of MR.

Offers of vendors who do not comply with above requirements would be rejected.

12.1 Cryogenic Test

Vendors to furnish copies of cryogenic test certificate for tests conducted as per given below:

12.1.1 Test shall be as per BS 6364.

12.1.2 Test temperature, unless specifically called for otherwise in the individual MR, shall be -45°C for LTCS and -196°C for all grades of austenitic stainless steel.

12.1.3 Tests carried out on a particular size of one type of valve, pressure rating and material shall qualify all sizes equal to and below the test valve size for the same type, pressure rating and material. In case of austenitic SS any one grade would qualify for all other grades of austenitic SS.

12.1.4 Tests should have been witnessed and certified by approved third party inspection agencies.

12.1.5 Cryogenic test need not be conducted for every order. Test conducted previously and witnessed by inspection agencies listed above shall be considered acceptable and need not be repeated.

12.2 Reference List

Copyright VCS Quality Services Private Limited – All rights reserved

Vendor shall furnish reference list for valves supplied for cryogenic service indicating the name of client, year of supply, size, material, pressure rating, type of valve and quantity.

12.3 Post Order Testing Procedure

12.3.1 Before conducting post order testing, vendor shall submit the following for approval:

a. Test procedure (as per BS 6364).

b. Cross-section drawing of the valve with material of construction.

c. Schematic of test rig (as per BS 6364) with complete details.

12.3.2 Test has to be conducted irrespective of the service on largest size for each type of valve and for each material and class rating. Vendor shall offer one, two or three valves for selection of test valve by inspector depending upon whether quantity of largest valve in the order is one, two or three and more than three respectively.

In the event of failure of the test valve to meet the specification requirements, the vendor shall conduct test on two more valves. These two valves which pass test successfully, are of lower size, then the qualification will be valid only to sizes upto which test has been conducted successfully.

12.3.3 In case of non-conductance of cryogenic test(s) within 12 weeks or failure in the test(s) conducted after receipt of order, the owner reserves the right to invoke any of the of the purchase order including cancellation of the purchase order at the risk and cost of vendor.

13. Bonnet extension, wherever specified in the valve sheet to BS 6364 shall be for "non cold box application" unless otherwise specified in the MR. Even if not called for in valve sheet, valves indicated as "LT" or "CRYO" shall be supplied with bonnet extension.

14. Bonnet and Gland extension joints shall be of butt welded/integrally cast construction.

15. Repair welding procedure for austenitic stainless steel valves in "CRYO" service shall have to be qualified for impact test as per ASME B31.3. Minimum acceptable impact energy shall be 20 J or lateral expansion of 0.38 mm at temperature of -196°C.

16. Wherever impact test of SS studs / nuts is called for in the data sheet, the impact value shall be 27 J at the intended service temperature specified in the data sheets.

Copyright VCS Quality Services Private Limited – All rights reserved

ENERGISING QUALITY

VCS QUALITY SERVICES PVT. LTD.

STANDARD SPECIFICATION
FOR
ERECTION OF MACHINERY AND EQUIPMENT

VPC – SS – PP – 2505

00	28.01.2020	MB	AK	AD	SK
Rev. No	**Date**	**Prepared By**	**Checked By**	**Approved By**	**Authorized By**

UNCONTROLLED COPY	:	**If printed**
CONTROLLED COPY	:	**If in soft and signed**

Copyright VCS Quality Services Private Limited – All rights reserved

REVISION RECORD						
Rev.	**Revision Date**	**Prepared by**	**Checked by**	**Approved by**	**Authorized by**	**Revision Description**
00	28.01.2020					
		MB	AK	AD	SK	

Copyright VCS Quality Services Private Limited – All rights reserved

CONTENTS

1.0 SPECIFICATION FOR ERECTION OF EQUIPMENT AND MACHINERY.....3

2.0 ERECTION OF COLUMNS, TANKS, VESSELS AND DRUMS ETC.....5

3.0 ERECTION OF MECHANICAL EQUIPMENTS.....9

4.0 ERECTION OF ROTATING EQUIPMENT.....10

5.0 GROUT & GROUTING.....14

Copyright VCS Quality Services Private Limited – All rights reserved

1.0 SPECIFICATION FOR ERECTION OF EQUIPMENT AND MACHINERY

1.1 Scope:

This specification covers technical requirements for erection of all static and rotating equipment by erection contractor at site.

1.2 General

1.2.1 All necessary handling equipment's, tools, tackles and precision instruments for carrying out the works as specified shall be provided by the Erection Contractor (EC) at his cost. EC must provide all tools and gauges for erection and alignment. Special tools, if any, received as part of machinery, will be given to EC for erection purposes, which shall be returned in good condition after use. Suitable deductions will be made by the Engineer-in-Charge (EIC) in case of loss or damage of the special tools. The value of such loss or damage will be decided by the EIC and EC shall be bound by such a decision.

1.2.2 Equipment Manufacturer's recommendations regarding preservation during storage at site and detailed specifications for the installation along with layout drawings, general arrangement/equipment outline drawings and sub-assembly drawings of the various equipment and machinery will be provided to EC during the performance of work. The requirements stipulated in these shall be fulfilled by EC in addition to what is stated in this specification. Erection shall be carried out as per the instructions and supervision of Machine manufacturer's representative, wherever such supervisory services are applicable.

1.2.3 All the items of work covered in the tender shall be carried out as per this Specification and other details to be furnished to EC. However, EIC reserves the right to give additional/alternative specifications and instructions, at any time, for execution of any particular work and EC shall execute such works in accordance with such additional/alternative specifications and instructions of the EIC. Such a step taken by the EIC shall not constitute a breach of the contract.

1.3 Preparation for Erection:

1.3.1 EC shall be responsible for organising the lifting of the equipment in the proper sequence, so that orderly progress of the work is ensured and access routes for erecting the other equipment are kept open.

Rigging procedure for all the major lifts (above 10 MT) and at maximum crane capacity shall be submitted by EC for the approval of EIC. However, approval to rigging procedure proposed by EC shall not relieve EC from his responsibility in following the proper lifting/erection methods on ensuring orderly.

1.3.2 Orientation of all foundations, elevations, length and disposition of anchor bolts and diameter of holes in the supports saddles shall be checked by EC, well in advance. Minor rectifications including chipping of foundations as the case may be, shall be carried out by EC after obtaining prior approval of EIC -. EC shall also be provided with the necessary structural drawings and piping layouts etc. wherever required for reference. EC shall crosscheck such piping and structural drawings with actual construction at site and in case of any mismatch inform the EIC before taking up the erection.

Copyright VCS Quality Services Private Limited – All rights reserved

1.3.3 During the performance of the work, EC shall keep structures, materials or equipments adequately braced by guys, struts or otherwise approved means which shall be supplied and installed by EC as required till the installation work is satisfactorily completed. Such guys, shoring, bracing, strutting, planking supports etc. shall not interfere with the work of other agencies and shall not damage or cause distortion to other works executed by him or other agencies.

1.4 Abbreviations used:

EC - Erection Contractor
EIC - Engineer-in-Charge

2.0 ERECTION OF COLUMNS, TANKS, VESSELS AND DRUMS ETC.

2.1 Scope of work of Erection Contractor

(a) Preparation of erection scheme and rigging procedure and obtaining its approval from EIC wherever necessary.

(b) Withdrawal of equipments from Owner's storage point, checking and reporting its conditions, transporting the same to EC's stores of work site including unloading etc.

(c) Erection on foundations furnished by Owner including aligning, leveling and grouting including grouting wherever necessary.

(d) Assembly and fixing of demisters, grids, internal distributors and other internal fittings in Columns, Vessels etc.

(e) Filling of Columns, Reactors, and Vessels/Drums etc. with Raschig rings, supporting elements, sand, concrete etc. as required.

(f) Welding of washers for equipment's, erection of pipe davit & minor welding of their parts as per specifications and instruction of EIC.

(g) Assembly & erection of Agitator (Mixer) along with drive unit (Motor) including all accessories for vessels/drums/reactors (wherever indicated) as per specification drawings & instructions of EIC.

(h) Flushing, cleaning and drying of Columns, Vessels/Drums etc.

(i) Completing the equipments in all respects for commissioning the plant as per drawings, specifications & instructions of EIC.

(j) Any modification in the erected Columns, Reactors, Vessels/Drums to the complete satisfaction of EIC.

2.2 General Conditions of Erection

2.2.1 Unless otherwise specified Columns, Vessels, Drums etc. will be generally supplied to the Erection Contractor in single piece and EC will not be required to carry out any assembly or welding. In case column is supplied in multiple pieces and erection of the equipment is not possible in single piece, EC shall be responsible for lifting the pieces, for aligning, welding and hydro test etc. in vertical position under the supervision of column Supplier (Fabricator). However, EIC shall be responsible for coordination between Erection Contractor & Fabricator. The schedule of quantities (SOQ) for equipment erection enclosed with the tender document outlines details of each equipment such as diameter, overall

Copyright VCS Quality Services Private Limited – All rights reserved

height, type of support (saddle/skirt/leg/bracket), position (horizontal or vertical) and approximate erection weight etc. However the erection elevation and location of equipment shall be as per the piping layout drawing enclosed with the tender.

2.2.2 Rigging procedures and erection schemes for all the heavy lifts weighing 10 MT & above shall be prepared by EC and got approved by EIC. Approval by EIC shall not relieve EC of his responsibilities. The details to be submitted will include the location of equipment from where it will be lifted, location of crane(s), details of crane(s) (like configuration, boom length, operating radius, boom point elevation, clearance underside the boom and the equipment, lifting capacity, counter weights to be deployed, holds on any neighbouring foundations, structures, equipment's etc.), the load chart of the crane(s), design of the lifting tackles like spreader beam, D-shackles, wire rope slings etc. Unless the erection scheme and rigging procedures are approved by EIC, erection of such equipment's shall not be undertaken in any case by EC.

2.2.3 Before starting the erection of Columns, Vessels etc., top surface of the foundations is to be cleared/chipped, roughened to obtain proper bond, while grouting. Also the sleeves are to be cleaned before erecting the equipment's. Line (orientation) and levels are to be marked on all the foundations to facilitate checking of alignment.

EC shall also check the correct elevation and orientation of civil, structural foundations, before proceeding with the erection work. Discrepancy, if any, shall be brought to the notice of EIC. However, minor rectifications and chipping of foundations up to a thickness of 15 mm in foundation height shall be carried out at no extra cost, by the EC. EC shall be responsible for supply of levelling plates, (if required) and shall carry out levelling of equipment under the directions of EIC.

2.2.4 While handling, transporting or erecting the equipment's, care shall be taken not to damage the nozzles, instrument connections, structural clips etc. EC shall also take care of the orientation of the nozzles and other connections of the equipment's while erecting the same and ensure compliance with the drawings and specifications supplied. Discrepancy, if any, in the number/orientation of the nozzles, cleats etc. should be brought to the notice of the EIC before actual erection is started.

2.2.5 Verticality of the Columns, Reactors/Vessels shall be checked with theodolites. After erection the equipment shall be levelled and properly aligned with necessary shims and wedges supplied by EC, at his cost. After the level, alignment and verticality etc. are checked and approved by EIC, EC shall carry out grouting and finishing Cement for grouting shall be supplied by Owner at issue rates.

2.2.6 EC shall produce recent test certificates of the slings which they will be using for erection work. However, retesting of the slings shall be done at site by EC at his cost, as and when required by EIC. The weights of test loads shall be as per IS-807. The test loads shall be supplied by EC at his cost. Tested slings will be punched for test loads and date of testing as directed by EIC.

2.2.7 EC shall also carry out the assembly, erection, levelling and alignment of all types of weir plates, baffles, distributors, collectors, spray nozzles, demisters, grids and other internal fittings etc. Work shall be carried out as per manufacturer's standards/specifications which shall be made available to EC at the time of erection. Raschig rings, molecular sieves, intalax saddles packing and other types of tower packings such as sand, catalyst etc. and S.S. wire mesh shall be loaded into sections of Vessels, Columns as per specifications and drawings. Details for internals to be installed by EC shall be as per separate schedule of quantities enclosed with the tender document. All packing's except clay and lime stone shall be washed with water before filling. Bottom layers, if required, shall be arranged as directed and random filling shall be done afterwards with equipment filled with water. Installation

Copyright VCS Quality Services Private Limited – All rights reserved

of packing's, shall be done only after flushing and cleaning of Columns/Vessels and completed to the satisfaction of EIC

2.2.8 EC shall carry out minor welding for attachment of prefabricated pipe davit parts such as rain covers, handles etc. with pipe davit, during or after erection of the same as per the manufacturer's specifications, at no extra cost to the Owner.

2.2.9 EC shall execute erection of wooden pillow for saddle support for cold horizontal vessels wherever necessary as indicated on the drawings/Ell, STD 7-12-0003 and as per the instructions of EIC.

2.2.10 EIC shall execute assembly & erection of agitator/mixer along with drive unit including all accessories as per supplier's instructions, specification drawings & instructions of EIC.

2.3 Flushing & Cleaning of Columns, Vessels, Drums etc.

2.3.1 After the erection, alignment and grouting of these equipments are complete, flushing and cleaning shall be carried out by EC as per specifications and instructions of EIC.

2.3.2 After flushing, cleaning and draining, equipment's shall be dried by compressed air at the pressure and for duration decided by the EIC. The Vessel interior shall be thoroughly inspected to the complete satisfaction of EIC before it is finally boxed up. Boxing up of manholes and hand holes shall be leak proof. All joints which need remaking shall be remade. Compressed air for drying shall be arranged by EC.

2.4 Inspection and Acceptance Limits for Level and Alignment.

2.4.1 Co-ordinates of foundations/supporting structures/mounting holes etc. shall be checked with respect to the plot plans by EC.

2.4.2 Before equipment's are placed on foundations, orientations shall be checked with respect to piping drawings.

2.4.3 When equipment's are firmly bolted down but prior to grouting, verticality of all the Columns, vertical vessels etc. Shall be checked by using theodolite. Tolerances for equipment after erection shall be as per Standard. The allowable deviation from plumb line shall be 1 mm per metre height, subject to maximum of 15 mm unless otherwise stated on the drawings.

2.4.4 Horizontal Vessels shall be checked for level across machined face of nozzle flanges with precision level.

2.5 Additional requirements for Underground buried vessels

2.5.1 Underground vessels for operating temp up to 60°C:
The vessels shall be supplied at site with one coat of inorganic zinc silicate primer duly applied on its external surfaces as per Painting Spec. All other works such as application of coal tar enamel, as per Painting Spec. & wrapping and coating as per Painting Spec. shall be carried out by EC. This shall include necessary materials, tools and tackles to complete the Job in all respect as per the instructions of EIC.

2.5.2 Underground Vessels for operating temp. Above 60°C and up to 300°C:
The vessels shall be supplied at site with one coat of inorganic zinc silicate primer as per Painting Spec. SS-PI-008, duly applied on its external surfaces. EC shall be required to carry out touch-up and repair of outside primer before erection of equipment.

2.5.3 EC shall do the necessary excavation, backfilling and removal of surplus earth at the site

Copyright VCS Quality Services Private Limited – All rights reserved

as per the directions of the EIC. EC's rate shall include the excavation, blast cleaning, painting, wrapping by craft paper, placing and fixing of Vessels, backfilling and removal of excess earth.

3.0 ERECTION OF MECHANICAL EQUIPMENT

3.1 Scope of Work of Erection Contractor

The scope of EC shall consist of withdrawal and transportation of equipments and accessories from Owner's stores to site, assembly of loose supplied components/parts erection of equipment on foundations, levelling, aligning and grouting, preparation of equipments for trial runs and hand over in fit condition for the start-up of the plant as per instructions of EIC.

3.2 Details of Owner Supplied Equipment's

Equipment's to be erected shall be supplied by the owner. Equipment's may be supplied in any of the following conditions.

- Single equipment such as filter, static mixer, silencer etc.
- Skid mounted equipment, fully assembled.
- Skid mounted equipment with some items supplied loose or as subassemblies involving interconnections also.
- System comprising of many equipment's, skids with interconnected piping & hook up.

3.3 Technical Requirements

3.3.1 All equipment/machinery erection shall be done by experienced fitters. For this purpose EC shall employ an experienced erection supervisor and crew who have done similar jobs.

3.3.2 EC shall study the layout drawings, for the machineries and equipment's with their auxiliaries, controls defining scope of supply.

3.3.3 Equipment's shall be checked for any damages as a result of transport, handling and defects, if any, shall be reported to the EIC. Rectification of defects shall be carried out in accordance with approved procedure.

3.3.4 Correct procedures for handling of equipment & installation on the foundation shall be followed as given in the manufacturer's manual. In case of non-availability of such procedures, EC shall develop & submit handling procedures for all equipment weighing more than 10 metric tonnes. The handling procedure shall be approved by the EIC.

3.3.5 EC shall check the correctness of equipment foundations or supporting structures as per the drawings. Equipment/Skid foot print dimensions shall be verified to match with the foundation. Minor chipping of foundation, pockets if required shall be carried out by EC.

3.3.6 All accessories like pressure gauges, seal oil, cooling water &Lube oil headers etc., shall be tagged and separately kept in Contractor's stores till erection. All flanged connections and openings shall be kept blanked with dummies, plugs to prevent entry of foreign particles.

3.3.7 Equipments shall be installed on the foundations in proper sequence. In case the equipments are delivered in subassemblies, EC shall do the assembly work as per manufacturer's instructions.

3.3.8 Equipments shall be installed in the correct orientation and alignment.

3.3.9 After installation and levelling the equipment shall be grouted with the specified grouting

Copyright VCS Quality Services Private Limited – All rights reserved

applied to the baseplate and support.

3.3.10 EC shall remove all the packing and protective devices used during transport and handling from the equipment such as shock absorbent materials from machined faces, blocking of shafts or rolling bearings & restraining devices from instruments, safety devices and protective equipments.

3.3.11 after the grouting is set & cured, the foundation bolts shall be checked to make sure that they are in straight and vertical position and properly tightened. Shims, if used, shall be on either side of the foundation bolts.

3.3.12 Desiccant, catalyst where supplied loose shall be loaded on to the respective vessels in specified quantities as per the suppliers instructions.

3.3.13 Internals, where supplied loose shall be assembled as per the drawings and manufacturer's instructions.

3.3.14 Unless otherwise specified, all the instruments such as pressure gauges, sight glasses temperature recorders etc. including instrument panels, if any, supplied along with the equipment with necessary connections, shall be installed by EC as part of Equipment erection.

3.3.15 Equipments shall be checked for final cleanliness before boxing up.

3.3.16 any interconnected piping & ducting shall be properly installed and supported. EC shall connect the gas, steam, air, utility piping, instruments, oil piping etc. as per manufacturer’s drawings, specifications and instructions of the EIC.

3.3.17 Safety devices shall be correctly installed.

3.3.18 Ladders, platforms, walkways shall be correctly installed with handrails, and flooring shall be properly secured.

3.3.19 Field welding, where specified shall be in accordance with the specified procedures and NDT tests where specified shall be carried out. Results of NDT tests shall be recorded.

3.3.20 Equipment alignment & couplings shall comply with tolerances specified in manufacturer’s drawings and manuals. Provisions of dowel pins or similar arrangements for retaining the alignment shall be carried out.

3.3.21 After the piping has been connected, the alignment shall be checked by EC again, to ensure that piping connections do not induce any undue stresses on the Equipment’s. After making necessary corrections on the piping, if any, realignment shall be done by EC to ensure that no undue stresses are induced on the equipment.

3.3.22 Painting, insulation & fireproofing where specified shall be carried out in accordance with the applicable specifications attached in the tender document.

3.3.23 Any alterations, deviations made during equipment erection with respect to manufacturer's drawings or instructions shall be duly recorded and approval shall be taken from the EIC.

3.3.24 Any special tools, tackles supplied along with the equipment and used during installation shall be returned to the stores through the EIC.

3.3.25 Any protection of the equipment after installation, if required shall be carried out in accordance of the instructions of the EIC.

Copyright VCS Quality Services Private Limited – All rights reserved

3.4 Trial Runs

3.4.1 Wherever specified, Machinery & Equipment erected & installed by EC under the supervision of Machinery/Equipment supplier shall be subjected to trial runs in accordance with clause 5.4 of this specification. Job specific trial run procedure, if specified, supersedes the trial run procedure as described in clause 5.4.

3.5 System Start-up

During this phase of work, EC shall provide as part of his work necessary skilled personnel as per requirement of EIC. Any defects noticed in the Equipment shall be made good by EC at his cost if such defects are attributable to him.

4.0 ERECTION OF ROTATING EQUIPMENT

4.1 Scope of Work of Erection Contractor

The scope of work shall consist of transportation of Rotating Equipment's and accessories from Owner's stores to site, assembly of sub-assemblies/ parts, erection of Rotating Equipment's on foundations, levelling, aligning and grouting, preparation of Rotating Equipment's for trial runs, carrying out no load/trial runs, return of any unused material to the owners stores and hand over in fit condition for the start- up of the Plant, as per instructions of EIC.

Defects due to EC's fault noticed during trial runs shall be rectified by him. Schedule of Quantities, indicate estimated numbers, dimensions and weights of the Rotating Equipment's. The actual data on dimensions and weights will be in the vendor data manuals.

The term 'Rotating Equipment' includes all pumps, compressors, steam & gas turbines, fans and blowers, diesel engine/steam turbine/gas turbine generator sets along with drivers accessories & auxiliary systems.

4.2 General Conditions of Erection

4.2.1 All Rotating Equipment erection shall be done by experienced fitters. For this purpose EC shall employ experienced and suitably qualified erection supervisor and crew who have done similar jobs.

4.2.2 The Rotating Equipment manufacturer's instructions as available regarding installation and trial runs will be passed on to EC during the course of work. The requirements prescribed. Therein shall be met in addition to what is stated in this specification. Erection shall be carried out as per instructions of the Rotating Equipment manufacturer's representative and under their supervision whenever the manufacturer is present at site. In all other cases instructions of the EIC, regarding procedure/sequence of erection shall be binding on EC.

4.2.3 For all Rotating Equipment, EC shall follow the proper sequence for assembly and erection. For Rotating Equipment received along with driver in coupled condition, the coupling bolts shall be dismantled by EC, and alignment shall be rechecked. Realignment, if required, shall be done before recoupling.

Where drivers and couplings are provided separately, drilling and tapping of holes in the base plates for fixing drivers, fixing of couplings on shafts, after enlarging the pilot bores to the correct size with key way etc. and dowelling including provision of dowel pins, alignment screws, jack-up screws or similar arrangements for retaining the alignment shall be carried out by EC as part of erection work. Shims & wedges as required for

Copyright VCS Quality Services Private Limited – All rights reserved

alignment shall be supplied by EC.

4.2.4 Process and utility (such as cooling water, steam flushing, quenching, lubricating oil, sealing etc.) Connections connected with rotating equipment and its auxiliaries shall be fabricated and/or installed by EC from materials supplied by the Owner as per drawings, specifications and instructions of the EIC.

4.2.5 Piping and accessories supplied with the rotating equipment such as seal oil/Gas system, cooling water system & Lube oil system etc. shall be tagged separately and kept in EC's stores till erection. All flanged connections and openings shall be kept blanked with dummies/plugs to prevent entry of foreign matter.

4.2.6 The local mounted instruments such as pressure gauges, sight glasses, temperature gauges etc. and Local instrument panels, if any, with necessary connections, shall be installed by EC as part of rotating equipment erection.

4.2.7 After initial alignment, the Rotating Equipment's shall be properly grouted. Grouting shall be carried out as per this specification. Wherever grout holes are provides in the base plates, grout shall be filled through the also.
Epoxy grout where recommended by the rotating equipment manufacturer, shall be provided by EC and shall be as specified in this standard.

4.2.8 Alignment between the Driver and driven equipment shall be done without connecting the equipment nozzles to respective piping. After completion of alignment, the equipment shall be connected to Piping. After the piping has been connected, the alignment shall be re-checked by EC, to ensure that piping connections do not induce any undue stresses on the Rotating Equipment's. After making necessary corrections on the piping, if any, re-alignment shall be done by EC and he will ensure that no undue stresses are induced on the Rotating Equipment.

4.3 Special Instructions

EC in addition to general instructions for erection as out lined in Para 4.2 above, shall also follow the following special instructions

4.3.1 Depending upon the size of equipment, Pump train will be supplied for erection in any of the following modes:

(a) Pumps with drivers and accessories fully assembled on a common skid (Base plate).
(b) Pumps mounted on base plate and couplings and driver supplied loose in separate packs.
(c) Various major components such as pump, drivers, couplings, gear boxes & base plates auxiliary systems like lube, seal flush equipment in separate packs.

4.3.2 Reciprocating type Compressors

4.3.2.1 Reciprocating compressors may be supplied for erection in knocked down condition in multiple packaged subassemblies such as frame assembly, distance pieces, fly wheels, cylinder block assemblies, valve assemblies etc. and other accessories such as, drivers, couplings, gear boxes (if any), control panels, gauge boards, coolers, lube oil systems, cooling water systems, etc. would be in separate packages.

Besides the above there would be other packages for loose supplied items such as instruments, pre-fabricated piping, and piping/tubing in commercial lengths.

Lifting devices for erection shall be arranged by EC depending on the weight of packages and elevation of installation.

Copyright VCS Quality Services Private Limited – All rights reserved

4.3.2.2 In case of Rotating equipment's received in knocked down condition, the various parts shall be assembled as per instructions of the EIC and as per manufacturer's instructions. All parts of the Compressor shall be thoroughly cleaned with solvents to remove protective compounds if any, before assembly.

4.3.2.3 The compressor, driver and other accessories shall be erected on their respective foundations and the compressor, couplings, gear box and driver shall be aligned and grouted as per the manufacturer's instructions and instructions of EIC and the manufacturers supervisor (when present).There-after all process and utility, drain & vent connections shall be completed as per the relevant drawings/instructions of EIC.

4.3.2.4 Final alignment shall be done after all the piping connections such as water, steam, drains and connection to coolers etc. are made. Tolerances for alignment shall be maintained as specified in the Manufacturer's Instruction Manual. To ensure that piping connections do not induce any undue stresses on the Rotating Equipment, the alignment shall be checked once again by EC after the piping has been connected. Any correction necessary for proper alignment shall be done by EC.

4.3.2.5 EC shall carefully study the vendor drawings, manuals and other data before start of the job to ensure correct erection, alignment and commissioning.

4.3.3 Centrifugal Compressors & Expanders

4.3.3.1 Centrifugal Compressors are supplied for erection in multiple packages such as,

- Compressor casings
- Drivers (Electrical motors, Steam/Gas turbines -.)
- {Steam/Gas turbines would be further supplied in multiple packages}
- Base plates (or skids)
- Lube oil/control oil systems
- Sealing systems
- Air filters (for gas turbines & compressors for air service)
- Temporary strainers
- Couplings
- Gear boxes
- Coolers
- Gauge boards
- Control panels
- Lube & Seal Oil tanks
- Fire systems (for gas turbines)
- Condenser (for steam turbines)
- Condensate systems (for steam turbines)
- Loose supply items
- Pre-fabricated & Commercial lengths piping, tubing.
- Other miscellaneous packages

4.3.3.2 Other requirements shall be same as defined in para's 4.3.2.2 to 4.3.2.5 above.

4.4 Trial Runs of Machinery

4.4.1 Any construction defects shall be intimated to EIC before start-up. All protective and safety guards shall be installed and rotating equipment shall be checked for free movement by manual barring over. All foundation bolts and alignment shall be checked before starting the trial runs, if damaged, rotating equipment may have to be opened and repaired as directed by EIC. Prior to carrying out the trial runs, the rotating equipment will be subjected to necessary checks by the EIC and the trial runs shall be commenced only after the approval of the EIC.

Copyright VCS Quality Services Private Limited – All rights reserved

4.4.2 Unless otherwise specified, all the rotating equipment will be subjected to trial runs for a continuous operation of 72 hours. In case of motor driven rotating equipment's, motors shall be decoupled and turned over to other agencies doing electrical work for testing and no load running of motors. After the no load runs of motors are satisfactorily completed, EC shall recouple the motors to the rotating equipment and recheck the alignment. The trial run of the rotating equipment shall be started only after the above is completed. EC shall provide, as part of his work, necessary skilled personnel (excluding the operating personnel) for conducting the trial runs round the clock during the trial runs period. The duration of trial run may be extended if it is considered necessary in the opinion of EIC and EC shall provide personnel for such extended period also. Final inspection of bearing etc. shall be carried out by EC after the Machinery had gone through the trial run and defects, if any, shall be made good for rendering the rotating equipment ready for start-up.

4.4.3 During the trial runs, readings of bearing temperature, cooling water inlet and outlet temperatures, lube oil inlet/outlet temperature and pressure, rotating equipment discharge pressure and temperature, starting in current, no load/full load current etc. shall be recorded, wherever necessary, by EC. Trial reports shall be prepared in the approved proforma by EC containing all the above details and submitted to the EIC as part of completion documents.

4.4.4 EC shall also provide necessary improvised fencing and watch & ward personnel as safety measures during trial runs.

4.5 System Start up

During start-up, EC shall provide necessary skilled personnel as per requirement of EIC, to rectify defects noticed in the rotating equipment, if such defects are attributed to him

5.0 EQUIPMENT GROUTING

All anchor bolt sleeves/pockets and space under Base plates/machine base frames/shoe plates, etc. Shall be grouted with either free flow non shrink cementations or epoxy grout as per the following categorisation:

Sr. No.	Type of Grout	Application
1	Non shrink cementations grout	All static and rotating equipment's, Unless covered in 2) below, viz Static equipment's like tall columns, vertical silo, blender etc. and horizontal vessel, drum, sphere, bullets, filter, heat exchangers, coolers etc. and other similar equipment's, steel stack/chimney, furnace etc. Low frequency, medium frequency, high frequency rotating machines like compressors (centrifugal, reciprocating, diaphram, screw, gear type etc.). Induced draft fan, forced draft fan, air blowers, pumps (centrifugal, reciprocating, diaphram, gear type etc.), expanders, turbine, generator, diesel generator, air coolers (fin fan cooler) and other similar equipment.

Copyright VCS Quality Services Private Limited – All rights reserved

		Machine like screen vibrator, extractor, centrifuge pulverizer, dryer, drop hammer, ball mill, crushers, bagging machine and general workshop equipment.
2	Epoxy grout	specifically if requested by the Machine Vendor.

5.1 Grout (Material)

All material used for grout shall be approved by EIC. EC shall submit details for prior approval of EIC. Only approved grout material shall be used.

5.1.1 Non-Shrink Grout

Non-shrink grout shall be premix type of cementitious (cement pre-graded fibre and additive) non-shrink, ready to use grout in dry powder form. It shall have free flow property when mixed with required quantity of water. It shall have initial setting time of 30 minutes.

It shall have the following features:

- Non corrosive to anchor bolts, base plate/saddle/frame, sliding plate.
- Not harmful to concrete and reinforcing steel.
- Non toxic
- Frost, oil and fire resistant
- Require normal curing
- Suitable to use under restraints and grout thickness required
- Expansive to counteract initial shrinkage
- Ensure high early strength without surface crack.
- Suitable for temperature of above 0 deg. C to 200 deg. C.
- Maximum flow distance is compatible to the dimensions of base plate/ saddle/frame.
- It should be resisted to the chemicals, gases etc. being handled in equipment/machinery.

It should have the following physical properties:

Minimum Compressive Strength	at 3 Days	:	25 kN/mm^2
	at 7 Days	:	30 kN/mm^2
	at 28 Days	:	40 kN/mm^2
Minimum Tensile Strength	at 28 Days	:	20 kN/mm^2
Minimum Bond Strength	at 7 Days	:	12 kN/mm^2
Maximum on strained expansion in	2 Hours	:	4%
Minimum Density		:	2000 kg/m^3

5.1.2 Epoxy Grout

Epoxy grout shall consist of epoxy resin base, hardener and filler component like graded and blended aggregate. Components of epoxy grout shall be of desired grade and mixed in proportion recommended by manufacturer such that it is injectable under base plate/frame/saddle etc., has low viscosity to meet the flow distances according to dimensions of base plate saddle/frame, it is suitable for the desired thickness, it is

Copyright VCS Quality Services Private Limited – All rights reserved

homogenous, free from segregation, attains high early and high fall strength. It shall have minimum Pot life of 30 minutes. It shall have all the features as specified in clause 6.1.1 except for expansive properties.

It should have the following physical properties :

Minimum Compressive Strength	at 1 Day	:	75 kN/mm^2
	at 7 Days	:	85 kN/mm^2
Minimum Flexural Strength	at 7 Days	:	25 kN/mm^2

5.2 Grouting (Placement)

5.2.1 Surface Preparation

Prior to positioning of equipment/machine etc. Over concrete pedestal, foundation, slab, beam, etc. All laitance & loose material shall be removed by wire brushing & chipping. The bearing concrete surface shall be sufficiently levelled, hacked with flat chisels to make it rough, clean (using compressed air). Additional chipping, if required, to suit level of base plate and/or minimum thickness of grout shall also be done. In case of use of cementations grout surface shall be thoroughly wet. All pockets for anchor bolts shall also be similarly cleaned. Any excess water shall be removed. In case of use of epoxy grout, it shall be ensured that surface/pocket to receive grout is totally dry. After erection, alignment/plumbing of equipment/machine in required level, orientation and plumb and installation of sliding plate. Forms shall be constructed around and joints made tight to prevent leakage of the grout.

5.2.2 Preparation of Grout

5.2.2.1 In case of premix type of grout water shall be added in required quantity as specified by supplier and/or EIC. Any specific instruction of manufacturer will be strictly followed.

5.2.2.2 In case of epoxy grout required quantity of all constituents shall be mixed in proportion recommended by manufacturer/supplier and/or EIC. All specific requirements of manufacturer supplier shall be strictly followed.

5.2.2.3 Required quantity of grout shall be made considering initial setting/pot life of grout. Any grout not used within initial setting time/pot life shall be rejected and in no case used for grouting.

5.2.3 Placement of Grout

5.2.3.1 Placing of grout shall be taken up only after level, orientation, alignment of equipment/machine has been approved by EIC and anchor bolts are placed in pocket.

5.2.3.2 In case of epoxy grout EC shall give details of grouting scheme and get approval of EIC.

5.2.3.3 The grout mixture shall be poured/injected continuously (without interruption till completion) by grouting pump/injecting gun from one side of base plat and spread uniformly with flexible steel strip and rammed with rods till the space is filled solidly and grout mixture carried to the other side of base plate and fill all pockets. Any specific requirement of manufacturer supplier shall be strictly followed. Epoxy grout shall be done by or under supervision of manufacturer/supplier and/or agency having adequate experience in this field as per direction of EIC.

Copyright VCS Quality Services Private Limited – All rights reserved

Total work shall be done under supervision and direction of EIC and care shall be taken that alignment of equipment/machine is not disturbed

5.2.3.4 Grout mixture shall be allowed to harden for a period of minimum 7 days or as required by manufacturer/supplier of grout and/or as decided by EIC. At the end of this period, the shims/edges/pack plate may be removed and anchor bolts tightened uniformly. Alignment of equipment/machine shall be rechecked and if found correct, the voids left by the removal of shims/wedges/pack plate (if removed) must be filled up with a similar mixture of grout. In case after checking, serious misalignment is indicated, the grout shall be removed completely and fresh grouting is done after making appropriate correction of alignment.

5.2.3.5 Minimum thickness of grout shall be 25mm for all types of grout and maximum thickness shall be 40mm for non-shrink grout. For epoxy grout the maximum thickness shall be as per manufacturer's recommendation and/or as specified in drawing.

Copyright VCS Quality Services Private Limited – All rights reserved

ENERGISING QUALITY

VCS QUALITY SERVICES PVT. LTD.

DESIGN GUIDE FOR RADIOGRAPHY REQUIREMENTS

VPC-SS-PP-2506

00	28.01.2020	MB	AK	AD	SK
Rev. No	**Date**	**Prepared By**	**Checked By**	**Approved By**	**Authorized By**

UNCONTROLLED COPY	:	If printed
CONTROLLED COPY	:	If in soft and signed

Copyright VCS Quality Services Private Limited – All rights reserved

REVISION RECORD						
Rev.	**Revision Date**	**Prepared by**	**Checked by**	**Approved by**	**Authorized by**	**Revision Description**
00	28.01.2020					
		MB	AK	AD	SK	

Copyright VCS Quality Services Private Limited – All rights reserved

Abbreviations:

API	:	American Petroleum Institute
ASME	:	American Society of Mechanical Engineers
AWS	:	American Welding Society
BS	:	British Standards
IQI	:	Image Quality Indicator

Copyright VCS Quality Services Private Limited – All rights reserved

CONTENTS

1.0 GENERAL 4

2.0 SCOPE 4

3.0 RADIOGRAPHY REQUIREMENTS 4

ANNEXURE-1 7

Radiography of welds in pipes of wall thickness below 10 mm (When X-rays are not used)

Copyright VCS Quality Services Private Limited – All rights reserved

1.0 GENERAL

Gamma-ray techniques in general are less sensitive compared to X-ray techniques for penetrated thicknesses of less than 50 mm. For the thinner material, the larger is the difference in sensitivity between radiographs taken with X-ray and Gamma-rays. The "flaw sensitivity" with use of Gamma-rays will be inferior to that of good X-ray techniques. The guidelines have been prepared to specify and implement the radiography requirements at design stage and later on, at fabrication & inspection stages.

2.0 SCOPE

This guide describes the radiography requirements covering the following:

- Design Requirements
- Type of Radiography film
- Material of construction for Image Quality Indicator (IQI)
- Placement of (IQI)

3.0 RADIOGRAPHY REQUIREMENTS

3.1 Design Requirements

The quality of radiographs for the job shall be as per the requirements of the design code and shall be judged by placement of the type of IQI as identified by the same code. The radiographs shall be taken with the help of X-rays source. The use of Gamma-rays (Ir-192) can be considered, wherever it is possible to get the required "Radiography Sensitivity" as per the requirements by the technique adopted for the purpose.

In order to permit the use of Gamma-rays for radiography in place of X-rays, it is necessary that the radiography procedure gives details of the following:

- Type of film
- Diameter/Thickness of the material
- Type of intensifying screens
- Source to Film Distance (SFD) and others (such as film density), which are desired in establishing the required sensitivity level as per the design code
- Type of source and source size Radiography sensitivity is primarily influenced by factors such as:

- Film selection
- Intensifying screen selection
- Geometric Sharpness
- Film density

For critical services for effective thickness of 10 mm and below, radiography shall be carried out with X-rays only. When X-ray is not feasible, Gamma radiography can be considered (ANNEXURE-I). The effective wall thickness shall be the actual pipe wall thickness for single wall

Copyright VCS Quality Services Private Limited – All rights reserved

exposure and twice the thickness for double wall exposure.

3.2 Type of Radiography Films

3.2.1 The type of description given regarding quality of films in different codes may not align with the description given by various film manufacturers. Therefore, for the purpose of this guide, the following is the examples of some of the film relating to various descriptions:

	Carestream (Kodak)	GE (Agfa Gevaert)
Ultra-fine-grain High contrast	Industrex DR50	D2
	Industrex MX125	D4
Fine grain	Industrex AA400	D7
High contrast	Industrex T200	-

3.2.2 Fuji films are also available in the Indian Market. Their equivalent can be worked out based on their literature and actual experiments.

3.2.3 When Gamma radiography is employed only ultra-fine grained high contrast film shall be used.

3.3 Material of Construction of IQI

In the case of low alloyed ferrous materials, IQI of low carbon steel is normally adequate. For highly alloyed ferrous materials which are usually referred to as steels, an IQI made of that particular special steel, for example stainless steel, may be used where there is extensive application of a particular alloy.

For aluminium or magnesium alloys, where there is insufficient application to justify the production of IQI from the same alloy the IQI of pure aluminium or pure magnesium respectively should be used.

For copper and its alloys, IQI of copper should be used.

Whenever it is considered impractical to get IQI of required material, the equivalent shall be established at site based on actual experiments.

In addition to the above, reference also shall be made to ASME Sec.V for selection of IQI material and its identification.

3.4 Placement of IQI

3.4.1 In order to judge the quality of radiography, the IQI should be placed covering the area under examination as indicated in the enclosed Fig.1 (a) and 1(b) along with other details:

- Area marker
- Date of radiograph
- Thickness
- Joint number
- Welder number

Copyright VCS Quality Services Private Limited – All rights reserved

- Job number

And additionally, if desired, contractor mark may also be placed.

The IQI shall be so placed, that the smallest hole (wire of the lowest diameter) is towards the outer end of the film away from the centre.

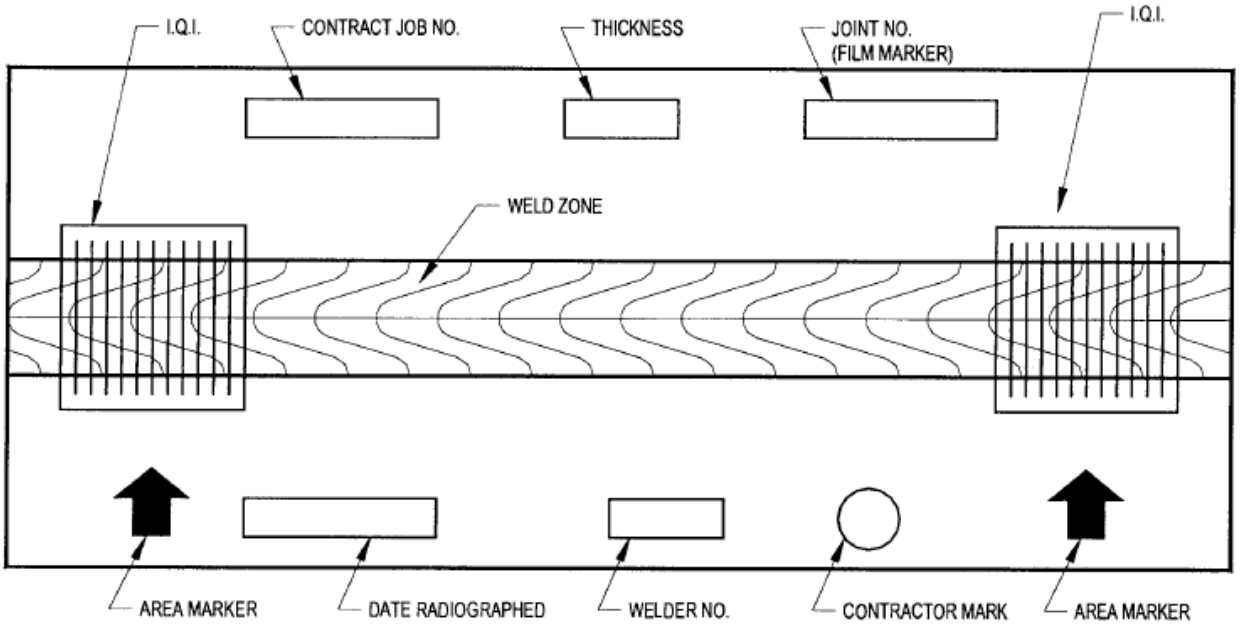

FIG.1 (a): FILM IDENTIFICATION AND PLACEMENT OF PENETRAMETERS

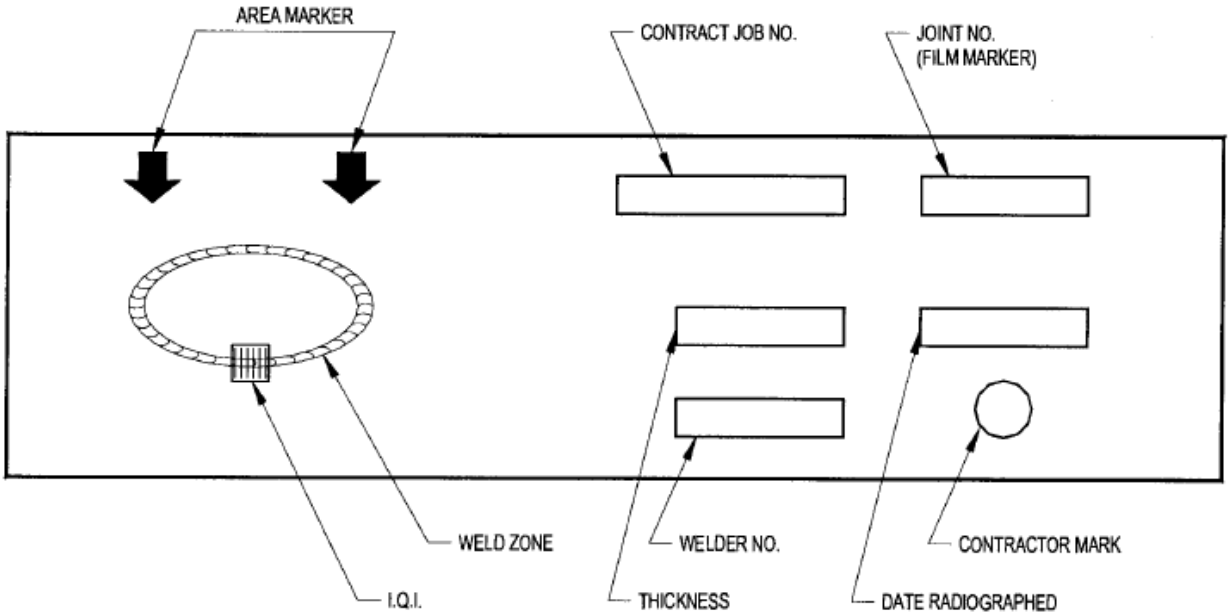

FIG.1 (b): FILM IDENTIFICATION AND PLACEMENT OF PENETRAMETERS (DOUBLE WALL DOUBLE IMAGE)

Copyright VCS Quality Services Private Limited – All rights reserved

ANNEXURE-1

Radiography of welds in pipes of wall thickness below 10 mm (When X-rays are not used)

For radiography of welds in pipes of wall thicknesses below 10 mm and upto 5 mm, the guidance for this work is given below in relation to the double wall single image method.

The requirements should be followed so far as possible with the following:

A. Only Se-75 should be used.

B. Only ultra-tine-grain or tine-grain films may be used, preferably the former one.

C. The source should be placed on the side of the pipe remote from the film, so that the source to film distance is approximately the same as the pipe outside diameter. The source should normally be in the plane of the weld centre line and in contact with or close to the weld. By agreement between the contracting parties, the source may be placed in some other position, after due consideration has been taken of the effects of this on the image formation.

D. The film should be curved around the pipe so as to ensure good contact with the weld.

The details of radiography procedure so established shall be recorded by the radiography agency and duly approved by Engineer-in-Charge.

Copyright VCS Quality Services Private Limited – All rights reserved