INDRADHANUSH GAS GRID LIMITED

NORTH EAST GAS GRID PHASE-III OF IGGL

BID DOCUMENT
FOR
LAYING & CONSTRUCTION OF STEEL GAS PIPELINE & TERMINALS ALONG WITH ASSOCIATED FACILITIES FOR SECTION-11 UNDER NORTH EAST GAS GRID PHASE-III OF IGGL.

OPEN DOMESTIC COMPETITIVE BIDDING (ODCB)

TENDER ID: VCS21000032

Tender No.: C221052-VCS-IGGL-TENDER-007

(VOLUME II OF IV)

ENERGISING QUALITY

PREPARED AND ISSUED BY
VCS QUALITY SERVICES PVT. LTD.
Noida, India

VOLUME II OF IV

STANDARD SPECIFICAITON: PIPING & PIPELINE (APPLICABLE FOR ALL SPREAD OF ALL PARTS)

Energising Quality	**PROJECT NUMBER: C221052**	IGGL

LIST OF ATTACHEMENTS				**TOTAL SHEETS**	7
DOCUMENT NO	C221052	00	PP	LST	2002

LIST OF ATTACHMENTS
(VOLUME II OF IV)

C1	17-05-2022	ISSUED FOR BIDS	AS	MC	HK
REV	**DATE**	**DESCRIPTION**	**PREP**	**CHK**	**APPR**

1.0 LIST OF ATTACHMENTS

CONTRACTOR shall carry out all works strictly in accordance with the drawings/documents/specifications indicated in subsequent paragraphs.

2.0 STANDARD SPECIFICATIONS

Sr. No	Description	Document No
2.1	STANDARD SPECIFICATION FOR PIPELINE CONSTRUCTION (ONSHORE)	VPC-SS-PP-2001
2.2	STANDARD SPECIFICATION FOR CONSTRUCTION OF PIPELINE CROSSING ROADS, RAIL ROADS & MINOR WATER CROSSINGS	VPC-SS-PP-2002
2.3	SPECIFICATION FOR 3 LAYER POLYTHYLENE COATING OF LINEPIPES	VPC-SS-PP-2003
2.4	STANDARD SPECIFICATION FOR MAJOR WATER CROSSINGS (CONVENTIONAL TRENCHING)	VPC-SS-PP-2005
2.5	STANDARD SPECIFICATION FOR CONCRETE WEIGHT COATING OF ONSHORE PIPELINES	VPC-SS-PP-2010
2.6	STANDARD SPECIFICATION FOR HIGH FREQUECNCY WELDED LINE PIPE	VPC-SS-PP-2008
2.7	STANDARD SPECIFICATION FOR FIELD JOINT COATING	VPC-SS-PP-2012
2.8	STANDARD SPECIFICATION FOR HORIZONTAL DIRECTIONAL DRILLED CROSSINGS	VPC-SS-PP-2013
2.9	STANDARD SPECIFICATION FOR HYDROSTATIC TESTING OF ONSHORE PIPELINES	VPC-SS-PP-2014
2.10	STANDARD SPECIFICATION FOR PIPELINE MARKERS	VPC-SS-PP-2015
2.11	STANDARD SPECIFICATION FOR CASING INSULATORS AND END SEALS	VPC-SS-PP-2016
2.12	STANDARD SPECIFICATION FOR DETAILED PIPELINE ROUTE SURVEY	VPC-SS-PP-2017
2.13	STANDARD SPECIFICATION FOR GEOTEXTILE BAGS	VPC-SS-PP-2018

© Copy Right VCS Quality Services Pvt Ltd. All rights reserved

Sr. No	Description	Document No
2.14	WELDING SPECIFICATION FOR ONSHORE PIPELINE	VPC-SS-PP-2019
2.15	STANDARD SPECIFICATION FOR WARNING MAT	VPC-SS-PP-2020
2.16	STANDARD SPECIFICATION FOR HEALTH, SAFETY & ENVIRONMENT	VPC-SS-PP-2021
2.17	STANDARD SPECIFICATION FOR PRE-COMMISSIONING & COMMISSIONING OF PIPELINE SYSTEM	VPC-SS-PP-2022
2.18	STANDARD SPECIFICATION FOR MAGNETIC CLEANING AND ELECTRONIC GEOMETRY PIGGING	VPC-SS-PP-2026
2.19	STANDARD SPECIFICATION FOR REPAIR OF POLYTHYLENE COATING	VPC-SS-PP-2027
2.20	QUALITY MANAGEMENT SYSTEM	VPC-SS-PP-2028
2.21	STANDARD SPECIFICATION FOR UNDERGROUND DEVICE USING GPR	VPC-SS-PP-2037
2.22	STANDARD SPECIFICATION FOR DOCUMENTATION REQUIREMENTS FROM SUPPLIERS	VPC-SS-PP-2043
2.23	STANDARD SPECIFICATION FOR QUALITY MANAGEMENT SYSTEM REQUIREMENT FROM VENDORS	VPC-SS-PP-2044
2.24.	WEDING PROCEDURE SPECIFICATION	VPC-SS-PP-2019.2

© Copy Right VCS Quality Services Pvt Ltd. All rights reserved

2.25	STANDARD SPECIFICATION FOR PIPELINE BALL VALVES	VPC-SS-PP-2004
2.26	STANDARD SPECIFICATION FOR FLOW TEE	VPC-SS-PP-2007
2.27	STANDARD SPECIFICATION FOR PIG TRAPS	VPC-SS-PP-2011
2.28	STANDARD SPECIFICATION FOR FLANGES AND WELDED FITTINGS {SIZE DN 450MM (18”) AND ABOVE}	VPC-SS-PP-2023
2.29	STANDARD SPECIFICATION FOR SEAMLESS FITTINGS AND FLANGES {SIZE UPTO DN 400MM (16”)}	VPC-SS-PP-2024
2.30	STANDARD SPECIFICATION FOR QUICK OPENING END CLOSURE (BLOW DOWN LINES)	VPC-SS-PP-2025
2.31	STANDARD SPECIFICATION FOR INSULATING JOINT	VPC-SS-PP-2029
2.32	STANDARD SPECIFICATION FOR PIG SIGNALLERS	VPC-SS-PP-2030
2.33	STANDARD SPECIFICATION FOR THIRD PARTY INSPECTION AGENCY(TPIA)	VPC-SS-PP-2031
2.34	STANDARD SPECIFICATION FOR INSPECTION, FLUSHING & TESTING OF PIPING SYSTEM	VPC-SS-PP-2501
2.35	STANDARD SPECIFICATION FOR PAINTING	VPC-SS-PP-2502
2.36	STANDARD SPECIFICATION FOR ASSORTED PIPES	VPC-SS-PP-2503
2.37	STANDARD SPECIFICATION FOR ASSORTED VALVES	VPC-SS-PP-2504
2.38	STANDARD SPECIFICATION FOR ERECTION OF MACHINERY AND EQUIPMENT	VPC-SS-PP-2505
2.39.	STANDARD SPECIFICATION FOR DESIGN GUIDE FOR RADIOGRAPHY REQUIREMENTS	VPC-SS-PP-2506
2.40	STANDARD SPECIFICATION FOR FABRICATION & ERECTION OF PIPING	VPC-SS-PP-2507
2.41.	STANDARD SPECIFICATION FOR NON DESTRUCTIVE EXAMINATION REQUIREMENTS OF PIPING	VPC-SS-PP-2508
2.42	WELDING SPECIFICATION FOR FABRICATION OF PIPING	VPC-SS-PP-2509

© Copy Right VCS Quality Services Pvt Ltd. All rights reserved

2.43	TECHNICAL NOTES FOR BOLTS & NUTS	VPC-SS-PP-2510
2.44	TECHNICAL NOTES FOR GASKETS	VPC-SS-PP-2511
2.45	STANDARD SPECIFICATION FOR POSITIVE MATERIAL IDENTIFICATION AT CONSTRUCTION SITES	VPC-SS-PP-2520
2.46.	STANDARD SPECIFICATION FOR CO2 TYPE EXTINGUISHER	VPC-SS-ME-3003

© Copy Right VCS Quality Services Pvt Ltd. All rights reserved

ENERGISING QUALITY

VCS QUALITY SERVICES PVT. LTD.

STANDARD SPECIFICATION
FOR
PIPELINE CONSTRUCTION (ONSHORE)

VPC – SS – PP - 2001

02	**03.01.2022**	**SR**	**MC**	**HK**	**HK**
Rev. No	**Date**	**Prepared By**	**Checked By**	**Approved By**	**Authorized By**

UNCONTROLLED COPY	**:**	**If printed**
CONTROLLED COPY	**:**	**If in soft and signed**

Copyright VCS Quality Services Private Limited – All rights reserved

REVISION RECORD

Rev.	Revision Date	Prepared by	Checked by	Approved by	Authorized by	Revision Description
00	28.01.2020					Issued as Standard Specification (Document formatting, Cover Page, Doc numbering updated from SS-PL-015 to VPC-SS-PL-0015 keeping Revision Number Same)
		MB	MC	AD	SK	
01	28.01.2020					Document numbering updated from VPC-SS-PL-0015 to VPC-SS-PP-2001
		MB	MC	AD	SK	
02	03.01.2022					Revised as marked
		SR	MC	HK	HK	

Copyright VCS Quality Services Private Limited – All rights reserved

ABBREVIATIONS:

ASME	American Society of Mechanical Engineers
ASTM	American Society of Testing and Materials
API	American Petroleum Institute
BS	British Standards
ISO	International Organization for Standardization
MSS-SP	Manufacturers Standardization Society - Standard Practice
NACE	National Association of Corrosion Engineers
OISD	Oil Industry Safety Directorate
SSPC	Steel Structures Painting Council

Copyright VCS Quality Services Private Limited – All rights reserved

CONTENTS

1.0 SCOPE 4

2.0 REFERENCE CODE & STANDARDS 5

3.0 GENERAL Requirement 6

4.0 ROUTE SURVEY & MARKING 7

5.0 RIGHT–OF–USE (ROU) 8

6.0 CLEARING, GRADING AND BACKFILLING OF ROU 10

7.0 HANDLING, HAULING, AND STRINGING OF STRINGING OF LINE PIPES AND STORAGE OF OTHER MATERIAL 12

8.0 TRENCHING 17

9.0 BLASTING 22

10.0 PIPE BEND/ BENDING 23

11.0 LINEING UP AND WELDING 25

12.0 LOWERING-IN 27

13.0 BACKFILLING 29

14.0 TIE-IN 32

15.0 SPECIAL INSTALLATIONS ON THE PIPELINE 32

16.0 THIRD PARTY FACILITIES 36

17.0 MARKER 38

18.0 FINAL CLEAN-UP OF THE CONSTRUCTION RIGHT-OF-USE (ROU) 38

19.0 MAINTENANCE DURING DEFECTS LIABILITY PERIOD 411

Copyright VCS Quality Services Private Limited – All rights reserved

1. SCOPE

1.1 This specification covers the minimum requirements for the various activities to be carried out by Contractor for or about the construction of cross-country onshore pipelines and associated facilities.

1.2 This specification shall be read in conjunction with scope of work and requirements indicated in specifications and documents included in the contract between Company and Contractor.

1.3 Contractor shall take full responsibility for the stability, suitability and safety of all operations and methods involved in the work.

1.4 The Contractor shall be deemed to have visited, inspected and examined the work area(s) and its surroundings and to have satisfied himself with the form and nature thereof, including sub-surface conditions, hydrological and climatic conditions, accessibility to the work area(s), the extent and nature of the work and materials and equipment necessary for the completion of the work.

1.5 The Contractor shall be deemed to have obtained all necessary information and provided for all risks, contingencies and all other circumstances, which may influence the work.

1.6 Contractor, as part of his Scope of work, shall investigate and establish any new development which may have taken place since the topographical survey was carried out by the Company during feasibility stage and shall submit detailed documentation to support any proposed realignment of the surveyed pipeline route resulting from the actual conditions encountered during his investigations or as required by the relevant Local Authorities. Any realignment of the surveyed pipeline route shall be subject to Company approval prior to implementation.

1.7 Requirements related to pipeline construction including, but not limited to, clearing and grading of Right-of-Use (ROU), staking of the pipeline route, handling, hauling, stringing of pipes along ROU, storing of all materials, trenching, cold field bending of pipes, line-up, welding, lowering, backfilling, tie-in, installation of associated facilities and pipeline appurtenances, testing, clean-up and restoration, maintenance during defect liability period, etc. are addressed in this specification.

2. REFERENCE CODE & STANDARDS

Reference code and Standards latest version has been followed for specification, in case of conflict between the requirement of this standard specification and the reference codes and regulations mentioned below, the more stringent requirement shall apply unless otherwise agreed by Company.

AMERICAN SOCIETY OF MECHANICAL ENGINEERS (ASME)

B 31.4 : Pipeline Transportation System for Liquid Hydrocarbons and Other Liquids.

B 31.8 : Gas Transmission and Distribution Piping Systems.

B 16.5 : Pipe Flanges and Flanged Fittings.

Copyright VCS Quality Services Private Limited – All rights reserved

B 16.9 : Factory made Wrought Butt Welding Fittings.

B 31.3 : Process Piping.

AMERICAN PETROLEUM INSTITUTE (API)

5L 1 : Recommended practice for rail road transportation of line pipe.

1104 : Welding of Pipeline and related Facilities.

1105 : Bulletin on construction Practices for oil and related facilities.

1109 : Marking Liquid Petroleum Pipeline facilities.

1110 : Recommended Practice for Pressure Testing of Petroleum Pipeline.

1102 : Steel Pipelines Crossing Railroads and High way.

BRITISH STANDARDS (BS)

8010 Part 2 : Pipeline on Land Design, Construction and Installation.

PNGRB REGULATIONS :

G.S.R 808(E) T4S : Regulations for Natural Gas Pipelines

G.S.R. Infra/ T4S/ P&PPL : Regulations for Petroleum and Petroleum products pipelines

G.S.R. 612(E) T4S : Regulations for CGD Network

INTERNATIONAL ORGANIZATION FOR STANDARDIZATION (ISO)

Part 192 : Transportation of natural gas by Pipeline (US Department of Title 49 transportation–Pipeline Safety standards).

Part 195 : Transportation of liquid by Pipeline (US Department of Transportation–Pipeline safety standards).

3. GENERAL REQUIREMENT

3.1. Contractor shall, with due care and diligence, execute the work in compliance with all laws, by laws, ordinances, regulations etc. of the land and provide all services and labor, inclusive of supervision thereof, supply of all materials, excluding the materials indicated as "Company Supplied Materials" in the contract, equipment, appliances or other things of whatsoever nature required for the execution of the work, whether of a temporary or permanent in nature.

3.2. In case, the Company will get the surveys and soil investigations carried out along pipeline route, the details of the surveys, soil investigations and other data collected by the Company shall be presented in the drawings and documents enclosed with the Contract for

Copyright VCS Quality Services Private Limited – All rights reserved

the information of the Contractor. The Contractor shall be deemed to have reviewed and satisfied himself with regard to the details provided in the Contract. Contractor shall not be entitled for any compensation in terms of time or cost in case of any variation in actual site conditions from the data furnished in the Contract.

3.3. Where in the Contractor's opinion the survey and investigation data are not found to be sufficient in detail, it shall be the responsibility of the Contractor to assess, requirement of any additional surveys and/ or soil investigations or any other data collection that may be deemed necessary for proper execution of the works. The Contractor shall be responsible for carrying out all such surveys and collect additional data/ information at no extra cost to Company.

3.4. Details of the permissions/ clearances obtained by the Company from agencies/ authorities having jurisdiction in the area where the work is to be performed are indicated in the documents enclosed with the Contract for the information of the Contractor. It shall be the responsibility of the Contractor to comply with all the conditions and requirements issued by the agencies/ authorities. In case any other permit/ authorization is required to be obtained from the relevant authorities for performance of the work, the same shall be obtained by the Contractor.

3.5. Compliance with the requirements of this specification or the Company's approval of any aspect of any operations covered by this specification shall in no way relieve the Contractor of his ultimate responsibility for the satisfactory completion of the work authorized under this Contract.

3.6. The Contractor shall provide full access to the Company Representative for monitoring of all work areas during all phases of work.

3.7. The Contractor shall provide and maintain all lights, guards, fencing, watchmen, etc., when and where necessary or required by Company or by any duly constituted authority and/ or by the authorities having jurisdiction thereof for the protection of the work and properties or for the safety and the convenience of public and/ or others.

3.8. The Contractor shall take full responsibility for the suitability and safety of all operations and methods involved in the work.

For the purpose of this specification the following definitions apply:

- Words 'Shall' and 'Must' where used indicate that a provision is mandatory.
- Words 'Should' and 'Will' where used indicate that a provision is not mandatory but is recommended as good practice.
- 'May' used as a verb to indicate that a provision.

3.9. WORKING SPREAD LIMITATIONS

Contractor shall, in general, observe the following maximum distances between the working mainline spread:

Between ROU grading, clearing and backfilling	:	25 Kms
Between backfilling and final clean-up	:	10 Kms

Copyright VCS Quality Services Private Limited – All rights reserved

4. ROUTE SURVEY & MARKING

4.1 Having been granted the accessibility of the route the contractor shall inspect and analysis the entire pipeline route within the designated corridor including Major crossing, Terminal/ Despatch Station and Terminal/ Receipt Station and if any spur lines to other pipeline/ station before commencement of construction.

4.2 These inspection reports shall state the condition of the item potentially affected by construction and record the mutual approval of all parties concerned

4.3 Contractor shall establish reference points in every 500 meters along the pipeline route. The reference points shall be positioned at 25 meters offset from pipeline centerline.

4.4 The contractor shall stake markers in the centerline of the pipeline in 100 m intervals. In areas where it is difficult to follow the centerline when staked at 100 m intervals, the stakes shall be set at 50 m intervals or less to ensure unobstructed visibility.

5. RIGHT–OF–USE (ROU)

Company shall make available the ROU acquired for the works covered in the Contract to the Contractor. The Contractor shall carry out the construction activities within the ROU acquired by Company. In case any additional land is required for carrying out the works, it shall be the responsibility of the Contractor to make arrangement for all such additional land at no extra cost to Company.

5.1 STAKINGS

Company has surveyed and marked the centreline of the pipeline route with stone pillars at every 250 meters and also provided pillars at all turning points. In addition, Company also has established survey bench marks along the route. However, it is possible that some of the pillars may have been removed or shifted since their installation. The Contractor shall locate and/ or re-establish benchmarks, turning points and intermediate points by field survey prior to commencement of grading and clearing.

The Contractor shall stake markers in the centreline of the pipeline at a distance of maximum 100 m for straight line sections and maximum 10 m for horizontal bends.

The width of the pipeline ROU acquired by Company and the location of the pipeline centreline within the ROU is shown on the Alignment Sheets. The Contractor shall stake ROU boundary line, so as to prepare the strip for laying the pipeline. Two ROU markers shall be staked at every 100 m, one on either side of the surveyed centerline, for this purpose by the Contractor.

In addition, the Contractor shall also install distinct markers for special points such as obstacle crossing, change of wall thickness along with chainage and contract limits.

Chainage markers shall be installed at every 250 meter.

Any deviation from the approved alignment shall be executed by Contractor after seeking Company approval in writing prior to clearing operations.

5.2 PUBLIC CONVENIENCE AND SAFETY

The Contractor shall give due consideration to the interests of property owners and tenants wherever involved, adhere to all ROU restrictions and permits, and exert all reasonable efforts

Copyright VCS Quality Services Private Limited – All rights reserved

to maintain the goodwill of the tenants and Land Owners for the benefit of the Company.

The Contractor shall provide temporary approaches to and from crossings of public roads, private roads and entrances that may be opened for construction, and maintain them in a safe condition.

Warning signs shall be erected on both sides of highway/ road crossing. The signs shall state that the pipeline ROU is a private work area and that unauthorized entry is prohibited.

5.3 FENCING

5.3.1 Prior to clearing and grading of the Right-of-Use or stringing of pipe, Contractor shall open fences on or crossing the construction Right-of-Use and install temporary gate. Before such fences are cut and opened, Contractor shall notify the land owner or tenant, and where practicable, the opening of the fences shall be in accordance with the wishes of said owner and tenant. In all cases where Contractor removes fences to obtain work room, Contractor shall provide and install temporary fencing, and on completion of construction shall restore such fencing to its original condition.

5.3.2 Contractor shall install temporary fencing on either side of ROU where in Company's opinion, it is considered essential to ensure safety and non-interference, especially in areas like grazing lands, villages etc.

5.3.3 Fencing shall be removable type wherever necessary, to permit crossing of traffic. The type of fencing must be suitable for the situation in accordance with user. The pole distance shall not be greater than 6m. The minimum height of the fencing shall be 1.2 m above grade. Fencing can consist of one or more rows of smooth wire and/ or of barbed wire.

5.3.4 Fencing shall be continuously maintained and the thorough-ways inspected to be shut during the execution of the work.

5.4 CARE OF SERVICES AND PROPERTY

5.4.1 When ingress and egress of equipment interferes with existing services, the necessary arrangements shall be made to preserve the continuous use of the existing services during construction of the pipeline.

5.4.2 Temporary culverts shall be installed in all drainage ditches, creeks, and other drainage courses where blockage might result in damage to property. All temporary culverts shall be removed when no longer required. Continuity of water supplies for both domestic and agricultural purposes shall be maintained.

5.4.3 In the event of damage to a facility, the Owner of the facility concerned shall be immediately informed and the facility repaired as necessary (where permitted by the Owner) to allow for its proper function until such time as permanent repairs can be made.

5.5 RESTRICTED WIDTH OF ROU

In certain areas restricted width of ROU shall be available and it shall be Contractor's responsibility to arrange its equipment etc. in such a manner as not to cause any hindrance to the movement of manpower or machinery and at the same time not to cause any damage to other's property.

Copyright VCS Quality Services Private Limited – All rights reserved

5.6 ACTIVITIES IN FLOODED FIELDS

Where the pipeline is constructed across agricultural land where regular flooding is necessary, such as rice paddocks. Contractor shall ensure that the water supply and access to land on either side of the ROU is maintained, and that the landowner's farming activities are not restrained in any way.

5.7 DUST CONTROL

Adequate dust control measures shall be adopted, including water sprinkling, to ensure that dust does not affect the work or the health and safety of personnel working and travelling on the ROU, adjacent landowners or tenants, animals, crops or pastures.

6. CLEARING, GRADING AND BACKFILLING OF ROU

6.1.1 ROU shall be cleared of all trees, bush, hedges or other obstacles lying within the width of ROU that may hinder the construction of pipeline.

6.1.2 Before clearing operations are started, the Contractor shall familiarize itself with all special provisions included in the ROU secured by the Company and the Contractor shall comply with these provisions.

6.1.3 Wherever the pipeline ROU runs across, through or alongside farm yards, built-up areas, groves, plantations, forests, horticultural spreads, gardens, plantations or grass-fields, ditches, dikes, roads, paths, railways or any other area with restrictions, the Contractor shall grade only the width of the ROU necessary for digging the pipeline trench and constructing. The Contractor shall carry out the work in such a way that damage resulting from the pipeline construction is kept to a minimum.

6.1.4 Permission for felling of "Scheduled Trees" as per applicable tree felling Acts shall be obtained by the Contractor prior to felling of the trees.

6.1.5 All stumps shall be grubbed on a continuous strip, with a width equal to trench top width plus two meters on either side centered on the pipeline centreline. In addition, all stumps shall be grubbed from areas of the construction. Outside of these areas to be graded, the stumps may either be grubbed or cut off to ground level. Any stump cut off must be left in a condition suitable for rubber-tyred pipeline equipment movement. Whenever stumps are grubbed and a hole is left in the ground, the Contractor shall back-fill the hole-and compact it to prevent water from gathering in it and making a big hole.

6.1.6 The ROU shall be graded to establish the working platform as required for efficient pipeline construction. The Contractor shall grade the pipeline ROU as required for installation of the pipeline and for providing access to the pipeline during construction.

6.1.7 The Contractor shall grade sharp points or low points to allow the pipe to be bent and laid within the limits set forth in this specifications and alignment sheets with regards to the minimum elastic curvature permitted. All grading shall be done as is necessary to minimize the necessity of sag and over bends.

6.1.8 Temporary or permanent deposit of any kind of material resulting from clearing and grading shall not be permitted in the approach to roads, railways, streams, ditches, drainage ditches and any other position which may hinder the passage and/ or the natural water drainage.

Copyright VCS Quality Services Private Limited – All rights reserved

6.1.9 The ROU clearing and grading operations, however, shall in no case involve embankment/ structures of any type without prior approval of the authorities having jurisdiction over the same.

6.1.10 In the case of natural or artificial deposits of loose soil, sand, heaps of earth or other fill materials, these shall be removed till stable natural ground level is reached so as to ensure the construction of the pipeline ditch in stable ground.

6.1.11 No filling of the ground over the pipeline centreline to achieve the minimum depth of cover shall be permitted. In locations where the ground is filled for access or other reason, the natural surface profile shall be surveyed to ensure that compliance with the minimum cover requirements can be demonstrated.

6.1.12 Grading of the ROU shall be kept to a minimum in order to preserve as much of rootstock as possible.

6.1.13 Cleared materials shall be stockpiled and preserved for use during restoration and final clean up. In no case shall it be left to interfere with the grading and laying operations.

6.1.14 Entire clearing and grading operations shall comply with Environment Management Plan.

6.2 GRADING IN STEEP AND ROCKY AREAS

6.2.1 In the case of ROU clearing and grading on the hillside or in steep slope areas, barriers or other arrangements shall be provided to prevent the removed materials from rolling downhill. Slope of side hill faces shall be stabilized to prevent landslides.

6.2.2 Grading operations in rocky terrain should normally be carried out by drilling, wedging, mechanical excavators or manually. In certain areas where solid rock cannot be removed until loosened by blasting, in order to make an adequate working space along the pipeline, blasting may have to be resorted to. Contractor shall identify such areas and take prior approval of concerned authorities before resorting to any blasting operations.

6.3 PROVISION OF DETOURS

6.3.1 Contractor shall do all necessary grading and bridging at road, water and other crossings and at other locations where needed, to permit the passage of its men and equipment. It is understood that the Contractor has recognized such restrictive features of the Right-of-Use and shall provide the necessary detours and execute the works without any extra cost to Company. Public travel shall not be inconvenienced nor shall it be wholly obstructed at any point.

6.3.2 In rough or steep terrain, Contractor may have to grade access roads and temporary bypass roads for its own use. Where such access roads do not fall on the Right-of-Use; Contractor shall obtain necessary written permission from land owners and tenants and be responsible for all damages caused by the construction and use of such roads, and at no extra cost to Company.

6.3.3 Contractor at his own cost shall furnish and maintain watchman detours, lanterns, traffic lights, barricades, signs, wherever necessary to fully protect the public.

6.3.4 Contractor shall be responsible for moving its equipment and men across or around watercourses. This may require the construction of temporary bridges or culverts.

Copyright VCS Quality Services Private Limited – All rights reserved

Temporary bridging required for Right-of-Use crossing water courses shall be constructed in consultation with concerned Authorities. Contractor shall ensure that such temporary works shall not interfere with normal water flow, avoid overflows, keep the existing morphology unchanged and shall not unduly damage the banks of water courses. No public ditches or drains shall be filled or bridged for passage of equipment until Contractor has secured written approval of the Authorities having jurisdiction over the same. Contractor shall furnish Company a copy of such approval.

6.4 OFF RIGHT-OF-USE DAMAGES

Contractor shall confine all its operations within limits of the Right-of-Use. Any-damage to property outside ROU shall be restored or settled to the Contractor's account.

Contractor shall promptly settle all off Right-of-Use damage claims. Should Contractor fail to do so, Company shall give written notice to Contractor that if Contractor does not settle such claims within seven days after such notice, Company shall have the authority to settle claims from the account of Contractor.

6.5 DISPOSAL OF DEBRIS

All grubbed stumps, timber, bush, undergrowth and roots cut or removed from the ROU, blasted rocks and boulders shall be disposed of in a manner and method satisfactory to Company, Land Owner and/ or tenant, and Government Authorities having jurisdiction and as soon as practical after the initial removal.

6.6 CONSERVATION OF TOP SOIL

6.6.1 In cultivable lands and other areas specifically designated by the Company representative , top 300mm of the aerable soil, excavated shall, be stockpiled separately; for; replacing in original position. Removed topsoil shall be stockpiled in a location that will minimize any loss due to erosion or mixing with other material.

6.6.2 Any topsoil lost due to erosion or mixing with other material shall be replaced with imported topsoil that is compatible with the area subject to approval by Company representative.

7. HANDLING, HAULING, AND STRINGING OF LINE PIPES AND STORAGE OF OTHER MATERIAL

7.1 GENERAL

The Contractor shall exercise utmost care in handling line pipe and other materials. Contractor shall be fully responsible for all materials and their identification until such time that the pipes and other materials are installed in permanent installation. Contractor shall be fully responsible for arranging and paying for temporary storage areas for the pipeline materials, however, method of storage shall be approved by Company.

Contractor shall reimburse the Company for the cost of replacement of all Company supplied materials damaged during the period in which such materials are in the custody of the Contractor. It shall be Contractor's responsibility to unpack any packing’s for the materials supplied by Company.

Pipe bevel protectors shall always be kept in position during all handling, transportation and stringing operations and shall be removed only prior to fit-up for welding. After

Copyright VCS Quality Services Private Limited – All rights reserved

fabrication and welding, the Contractor shall arrange to return all such bevel protectors at Company's designated storage yard and as instructed by Company.

7.2 "TAKING-OVER" OF LINE PIPES

In case Company supplies line pipes to the Contractor as 'Free Issue Material', the Contractor shall receive and 'take over' against requisition, line pipes from the Company's designated place(s) of delivery as defined in the Contract. The Contractor shall, in the presence of Company Representative, visually inspect the entire surface of the bare pipes and coating of the coated pipes at the time of taking delivery and record all damages and exact length of pipes received.

In the case of coated pipes, the Contractor at his option may carry out holiday detection at a prescribed set voltage and record any holidays detected at the time of 'taking over', in the presence of Company Representative. However, if the Contractor proposes to perform only visual inspection, then repair of all holidays found at the time of laying the pipeline shall be carried out by the Contractor at no extra cost to Company as per relevant Specification.

The Contractor at his option may also carry out gauging of the pipes and record any dents detected at the time of 'taking over', in the presence of Company Representative. However, if the Contractor proposes to perform only visual inspection, then repair of all dents found at the time of laying the pipeline shall be carried out by the Contractor at no extra cost to Company. Repair of all damage occurring after taking over delivery of material shall be contractor's cost.

7.3 HANDLING OF LINE PIPES

7.3.1. BARE PIPES

Contractor shall unload, load, stockpile and transport the bare pipes using suitable means and, in a manner, to avoid denting, flattening, or other damages to pipes. Pipe shall not be allowed to drop or strike objects, which will damage the pipe but shall be lifted or lowered from one level to another by suitable equipment. Lifting hooks when used shall be equipped with a plate curved to fit the curvature of the pipe. In loading pipe on trucks each length shall be lowered to position without dropping and each succeeding length shall rest on special supports on the truck and shall be separated from the adjacent pipes. After loading, suitable chains and padding shall be used to tie the load securely to each bolster. Pipe, when stock piled, shall be placed on suitable skid to keep it clear of the ground and flood water. Care shall be exercised in handling or stock-piling pipes in order to avoid distortion, flattening, denting or other damages. The Contractor shall provide all necessary timber or other materials required for the stock-piling. While stacking, the number of allowable layers of bare pipes shall be calculated as per API RP 5L1 and shall be agreed with Company. The stacks must be properly secured against sliding and shall consist of pipes of the same diameter and wall thickness. Adjacent stacks of pipes having different dimensional characteristics shall be clearly separated.

Pipes which are damaged at the time of delivery or `taking-over' (when line pipe is supplied by Company), particularly those which are dented, buckled, or otherwise permanently deformed, must be stacked separately and may be transported to the sites only when these defects have been repaired or eliminated.

7.3.2. CORROSION COATED PIPES

Copyright VCS Quality Services Private Limited – All rights reserved

The Contractor shall load, unload, transport and stockpile the coated pipes using approved suitable means and, in a manner, to avoid damage to the pipe and coating. Contractor shall submit to Company a complete procedure indicating the manner and arrangement used for handling and stacking of coated pipes for Company approval prior to commencement of handling operations.

Use of vacuum lifting equipment's is preferred. Hooks may also be used for handling the pipes provided they have sufficient width and depth to fit the inside of the pipe and covered with soft material like rubber, Teflon or equivalent, so as not to cause damages to bevel or pipe ends. During hoisting cables/ wire ropes shall have sufficient inclination compared to pipe axis so that they do not come into contact with external coating.

Coated pipes may be handled by means of slings and belts of proper width (minimum 60 mm) made of non-metallic/ non-abrasive materials. In this case, pipes to be stacked shall be separated row by row to avoid damages by rubbing the coated surface in the process of taking off the slings. Use of round sectional slings is prohibited.

During handling, suitable handling equipment's with proper length of booms shall be used. Forklifts may be used provided that the arms of the forklifts are covered by suitable pads preferably rubber. Before lifting operations, it is essential to ensure that the pipe surface is free from foreign materials with sharp edges. Belts/ slings when used shall be cleaned to remove hard materials such as stone, gravel etc. Coated pipes shall not be bumped against any other pipe or any other objects. Rolling, skidding or dragging shall be strictly forbidden.

Coated pipes at all times shall be stacked completely clear from the ground so that the bottom row of pipes remains free from any surface water. The pipes shall be stacked at a slope so that during rain water does not collect inside the pipe.

The coated pipes may be stacked by placing them on ridges of sand free from stones and covered with a plastic film or on wooden supports provided with suitable cover. This cover can, for example, consist of dry, germ free straw with a plastic film, otherwise foam rubber may be used. The supports shall be spaced in such a manner as to avoid permanent bending of the pipes, particularly in case of small diameter pipes with low wall thickness. The pipes shall be stacked so that the uncoated bevelled ends are in line at one end, thus making differences in lengths clearly noticeable.

Stacks shall consist of limited number of layers so that the pressure exercised by the pipes own weight does not cause damages to the coating. Each pipe section shall be separated by means of spacers suitably spaced for this purpose. Stacks shall be suitably secured against falling down and shall consist of pipe sections having the same diameter and wall thickness. The weld bead of pipes shall be positioned in such a manner so as not to touch the adjacent pipes.

Coated Pipes stacked in open storage yards/ dump yards shall be suitably covered on top to decrease direct exposure to sunlight. The ends of the pipes during handling and stacking shall always be protected with bevel protectors.

The trailers/ rail wagons shall be equipped with adequate pipe supports having as many round hollow beds as the number of pipes to be placed on the bottom of the trailer bed. Supports shall be provided for at least 10% of the pipe length. These supports shall be lined with a rubber protection and shall be spaced in a manner as to support equal load from the pipes. The rubber protection shall be free from all nails and staples where pipes are in contact. The

Copyright VCS Quality Services Private Limited – All rights reserved

second layer and all subsequent layers shall be separated from each other with adequate number of separating layers of protective material such as straw in plastic covers or mineral wool strips or equivalent, to avoid direct touch between the coated pipes.

All stanchions of trailers/ rail wagons used for transportation shall be covered by non-abrasive material like rubber belts or equivalent. Care shall be exercised to properly cover the top of the stanchions and convex portions such as reinforcement of the truck/ rail wagon body, rivets etc. to prevent damage to the coated surface.

7.4 TEMPORARY STOCKPILES

The Contractor at his own cost shall arrange for the land required for temporary stockpile of pipes, whenever the pipes are to be stockpiled prior to stringing. Pipes shall be stacked minimum 300 mm clear off the ground so that the bottom of pipes remain free from any surface water. The pipes shall be stacked at a slope so that rain water does not collect inside the pipe.

The coated pipes may be stacked by placing them on ridges of sand free from stones and covered with a plastic film or on wooden supports provided with suitable cover. This cover can, for example, consist of dry, germ free straw covered with a sheet of plastic sheet or foam rubber. The supports spacing shall be such that prevents permanent bending of the pipes.

Stacks shall consist of limited number of layers so that the pressure exercised by the pipes own weight does not cause damages to the pipe as well as coating. Each pipe section shall be separated. The Contractor shall submit calculations for the number of tiers of pipes during stacking for approval by Company Representative. API RP 5L1 may be used as guidelines.

By means of spacers suitably spaced for the purpose,stacks shall be suitably secured against falling down and shall consist of pipe sections having the same diameter and wall thickness. Where applicable, the weld bead of pipes shall be positioned in such a manner so as not to touch the adjacent pipes.

The pipes shall be stacked in such a manner that the uncoated beveled ends are in line at one end, thus making differences in lengths clearly noticeable at the other end.

At such time as the temporary stockpile site is no longer needed, the site shall be cleaned up and the property restored to the satisfaction of the landowner and the clean-up as per of this Specification. The Contractor shall obtain letter from Land Owners clearly stating that the land has been returned and handed over to the Land Owners to their entire satisfaction.

7.5 STRINGING OF LINE PIPE ALONG ROU

7.5.1 Pipes shall be unloaded from the stringing trucks and lowered to the ground by means of side boom, Hydra Crane or swinging crane or other suitable equipment using lifting devices as per this specification. Pipe shall not be rolled, dragged or dropped from the stringing truck.

7.5.2 Stringing of pipe shall be carried out only in day light and after clearing and grading operations have been completed. Pipe shall not be strung on the ROU in rocky areas, where blasting may be required, until all blasting is complete and the area cleared of all debris. If pipe has already been strung in an area where blasting is subsequently found to be required, all previously strung pipe shall be removed to a safe area at Contractor's cost and time and protected from damage.

Copyright VCS Quality Services Private Limited – All rights reserved

7.5.3 The stringing of the pipe on the ROU shall be done in such a manner as to cause the least interference with the normal use of the land crossed and to avoid damage to or interference with the pipes. The sequence of pipes must be interrupted at suitable intervals, spaced to coincide with passages, roads, railroads, water-bodies and at other places if requested by Land Owner or tenants to permit use of the land. Care shall be taken to provide safe working space between trench edge and the pipe.

7.5.4 Strung pipe shall be supported clear off the ground (minimum 300 mm) and in a manner that will not damage the pipe or coating. Pipe shall be strung on approved soft earth / sand filling bags & wedge.

7.5.5 Special precautions are to be taken and extreme care exercised where stringing operations are carried out in the vicinity of overhead power lines, including possible earthing of individual pipe joints.

7.5.6 The Contractor shall adequately anchor the pipe on steep slopes and where the ROU condition dictates, to prevent the pipe from sliding or rolling from skids.

7.5.7 It shall be the responsibility of the Contractor to ensure that pipe is strung in accordance with the approved drawings for the proper placement of pipe by size, thickness, grade and other specifications. Any additional handling of pipes resulting from failure to, comply with these requirements shall be at the Contractor's expense.

7.5.8 In case line pipe supply is by different Manufacturers, the, Contractor shall string all line pipe of one Manufacturer before commencing the stringing of the line pipe of another Manufacturer.

7.5.9 When parallel pipelines are being constructed, bumping against and contact with the strung sections of pipe shall be avoided, whether the stringing of the pipes for the individual lines is carried out separately or simultaneously.

7.6 REPAIR OF DAMAGED PIPES

After the pipe has been strung on the Right-of-Use, it shall be inspected by the Contractor and the Company and all defective pipe ends repaired. Defective pipes shall be repaired or rejected as the Company may direct as per the requirements of this Specification.

7.7 MATERIALS OTHER THAN LINE PIPE

7.7.1 Contractor shall receive and take over against requisition all Company supplied materials from Company's designated place(s) of delivery as defined in the contract. Contractor shall perform visual inspection and defects, if any noted, shall be recorded separately. The Contractor shall be entitled to extra compensation for repair and rectification of such defects at the rates set forth in the "contract". Contractor shall take permission from Company before start of such repair.

7.7.2 The Contractor shall perform the necessary loading, unloading, hauling from points designated by the Company and storing, if necessary, of all materials. The Contractor shall exercise care in handling, hauling, storing and distribution of materials in order to avoid damage and deterioration of these materials and prevent their theft or loss.

7.7.3 Materials excluding line pipe shall be stored in sheltered storage. Such materials shall not be strung on the Right-of-Use but shall be transported in covered conveyances for use only at

Copyright VCS Quality Services Private Limited – All rights reserved

the time of installation.

7.7.4 Contractor shall ensure that all valves and whenever applicable, other materials are fitted with suitable end covers of the type approved by Company. Materials with worked surfaces such as flanges, pipe fittings etc. must be stacked and handled so as to avoid contact with the ground or with substances that could damage them.

7.7.5 The Manufacturer's instructions regarding temperature and procedure for storing materials, which are subject to alteration of the original properties and characteristics due to unsuitable storage, must be strictly complied with and, if required, an adequate heat conditioning shall be provided for these materials.

7.7.6 When material is supplied in containers and packages, it must not be thrown or dropped, nor handled using hooks which could damage the container or the materials, either during loading/ unloading or during successive handling, until their final use.

7.7.7 Coating materials, which are susceptible of deteriorating or suffering from damages especially due to humidity, exposure to high thermal excursions or other adverse weather conditions shall be suitably stored and protected. These materials shall be kept permanently in store, supported above the ground in a dry place protected against the weather and transported for use only at the time and in the quantities necessary for immediate application. Deteriorated materials shall not be used and replaced with no extra cost to Company.

8. TRENCHING

8.1 LOCATION

8.1.1 Contractor shall excavate and maintain the pipeline trench on the staked centerline of the pipeline taking into account the curves of the pipeline.

8.1.2 In case of common ROU, the centerline of the trench shall be established from the location of existing pipeline. In case of independent ROU, the centerline of the trench shall be established from the edge of ROU.

8.2 TRENCH EXCAVATION

8.2.1 Trenching shall include all excavation, whether by trenching machine, back-hoe, power shovel, by hand, by blasting or by other methods which may be necessary to prepare a trench for the pipe with the minimum cover between top of pipe and immediate ground level as set forth in this specification.

8.2.2 Contractor shall, by any method approved by Company, dig the pipeline trench on the cleared and graded Right-of-Use.

8.2.3 In cultivable land and other areas specifically designated by the Company, top 300mm of the arable soil on the pipeline trench top width shall be excavated and stored separately, to be replaced in original position, after backfilling and compacting rest of the trench.

8.2.4 Suitable crossings shall be provided and maintained over the open ROU, where necessary, to permit general public, property owners or his tenants to cross or move stock or equipment from one side of the trench to the other.

8.2.5 Care shall be exercised to see that fresh soil recovered from trenching operation, intended

Copyright VCS Quality Services Private Limited – All rights reserved

to be used for backfilling over the laid pipe in the trench, is not mixed with loose debris or foreign material. The excavated material shall never be deposited over or against the strung pipe.

8.2.6 In steep slope areas or on the hillside, before commencing the works, proper barriers or other protection shall be provided to prevent the removed materials from rolling downhill.

8.2.7 On slopes wherever there is danger of landslide, the pipeline trench shall be maintained open only for the time strictly necessary. Moreover, the Company may require manual excavation of trench, local route detouring and limiting the period of execution of the works. The Contractor shall make adequate arrangements for safe working of the personnel involved in manual excavation of trench.

8.2.8 In certain sloppy sections, before the trench cuts through the water table, proper drainage shall be ensured both near the ditch and the Right-of-Use in order to guarantee soil stability.

8.2.9 All sewers, drain ditches and other natural waterways involved in the execution of the works shall be maintained open and functional. The same applies to canals, irrigation canals, and pipelines and buried facilities crossed by the ditch for which temporary pipelines shall be laid, if required, and proper temporary installations provided.

8.2.10 All sewers drain ditches and other natural waterways involved in the execution of the works shall be maintained open and functional.

8.3 NORMAL COVER AND TRENCH DIMENSIONS

The trench shall be excavated to a minimum depth sufficient to provide the minimum cover as specified below. The dimensions in the table below shall govern except as noted herein or as shown on the job standards or detailed construction document/ drawings or as required by authorities having jurisdiction, whichever is stringent.

Location		Minimum Cover in (Mtr)	
		Gas Pipeline	**Liquid Pipeline**
1	Residential Area, Industrial, Commercial Area	1	1.2
2	Minor water crossing/ steam/ drain nala/ canals	1.5	
3	River crossing for which scour depth is defined (below scour)	2.5	
4	River crossing for Rocky strata	1.5	
5	Uncased/ Cased Road Crossing/ Station approach	1.2	
6	Rocky Terrain	1	
7	Cased Railway Crossing	1.7	
8	Marshy land and creek area	1.5	

Copyright VCS Quality Services Private Limited – All rights reserved

9	Area under influence of tides	1.5
10	Drainage, ditches at road/ railway crossing	1.2

Note

- Minimum depth of cover shall be measured from the top of pipe corrosion/ concrete weight coating (as applicable) to the top of undisturbed surface of the soil or top of graded working strip or top of road or top of rail whichever is lower.
- Fill material in working strip shall not be considered to add to the depth of cover. However, surface of fill material placed to fill hollows may be used to determine the depth of cover subject to prior approval by Company.
- In case the Pipeline is located within 15 mtr from any dwelling unit, the cover shall be increased by 300mm over and above that specified.

8.4 EXTRA DEPTH AND CLEARANCE

8.4.1 At points where the contour of the earth may require extra depth to fit the minimum radius of the bend as specified or to eliminate unnecessary bending of the pipe or where a deep trench is required at the approaches to crossings of roadways, railroads, rivers, streams, drainage ditches, and the like and in transition between normal trench and deep trench, the Contractor shall excavate such additional depth as may be necessary.

8.4.2 The Contractor shall excavate to additional depth where the pipeline approaches and crosses other pipelines, sewers, drain pipes, water mains, telephone conduits and other underground structures, so that the pipeline may be laid with at least 500 mm free clearance from the obstacle or as specified in the standards, or greater as may be required by authorities having jurisdiction over it.

8.4.3 In those areas where trench to be padded with select soil such as rocky areas, seismic zone crossings, station approaches etc. the trench shall be made deeper, to accommodate specified thickness of bedding and/ or padding, than otherwise required to maintain specified cover. Thickness of bedding and/ or padding required shall be as specified in the Contract drawings and documents.

8.5 TRENCHING AT CROSSING

Before excavating the trench across thoroughfare such as roads, tracks, and wherever public access to be normally expected, approval of the crossing shall' be obtained by the Contractor from the concerned authorities. Temporary diversions to permit the traffic shall be provided.

8.6 TRENCHING WITHIN OR ADJACENT TO OTHER UTILITIES

8.6.1 At locations, where pipeline is to be installed within the ROU or the body of a road, canal, dyke or other locations under jurisdiction of government/ public bodies, the Contractor shall perform such work, according to the requirement of concerned Authorities. When it becomes necessary, the Contractor shall resort to manual digging, well point drain, erection of sheet piling or any other special construction method in these areas without any extra cost to Company. The facilities damaged during trenching shall be restored; to their original

Copyright VCS Quality Services Private Limited – All rights reserved

condition to the satisfaction of concerned authority.

8.6.2 In locations, where the pipeline has to be laid more or less parallel to an existing service such as pipeline, cable and/ or other utilities within the ROU, the Contractor shall carryout Trenching as per the requirements of the owners/ authorities of that service. At such locations; the Contractor shall perform the work in such a way that even under the worst weather and flooding conditions, the existing pipeline/ utilities remain stable.

8.7 ENCROACHMENTS AND WORKING NEAR EXISTING PIPELINE AND OTHER UTILITIES

Contractor shall be liable for any damage occurring to, or resulting from damage to other pipelines, underground structures/ utilities, as laid down in clause of this specification. Contractor shall make trial pits at minimum intervals of 100 m along the straight route and at suitable less intervals along the curves in the pipeline route to establish the centerline clearing the existing utilities to avoid damage to the existing utilities during the construction of new pipeline.

The location of a new buried pipeline, when running parallel to an existing buried pipeline, should be at a minimum clear distance of 5.0 meters from the existing underground pipeline when heavy conventional construction equipment is expected to be utilized. This distance may be reduced after careful assessment of construction methodologies so that it does not result in unsafe conditions during construction. In any case the minimum clear distance shall not be less than 3.0 meters.

Existing pipeline should be clearly marked on the ground during construction so as to avoid any machinery movement or dumping of excavated earth over the existing pipelines.. Bi-language (local language and Hindi / English) caution signs should be installed while working in such areas. In case the movement of machinery over the existing pipelines is unavoidable, the required area over the existing pieline need to prepared with earth to ensure an additional cover of 1m. The machinery movement shall be restricted to such area only. The contractor has to do all such preparation with no additional cost to the Company.

8.8 PROVISIONS FOR NEGATIVE BUOYANCY TO THE PIPE

8.8.1 Contractor shall check if up-floating of Pipeline is present in open trench and then shall take appropriate measures to prevent up-floating such as applying soil dams and dewatering of trench or temporary filling of water into the line (in exceptional cases).

8.8.2 In the case of water on the ditch bottom when the pipeline is being laid, the ditch shall be drained to the extent and for the time required to make a visual inspection of the ditch bottom. After this inspection, the presence of water will be allowed provided its level does not cause sliding of the ditch sides and pipe floating before backfilling when no concrete weighing is provided.

8.8.3 The water pumped out of the ditch shall be discharged into a natural water course.

8.8.4 Whenever up-floating of the pipeline after backfilling is to be reckoned with, anti-buoyancy measures shall be provided by Contractor with Company’s approval for such areas of

Copyright VCS Quality Services Private Limited – All rights reserved

construction, using one or a combination of the following methods.

- Weighing by applying a continuous concrete coating around the pipe.
- Weighing by -installing gravel filled Geotextile bags.
- Installing of soil Bund over the pipeline in trench during lowering.
- Deeper burial of pipeline.
- Provision of select backfill material.

The above provisions shall be in accordance with the relevant specifications and/ or job standards/ drawings.

Contractor shall indicate the option(s) selected to Company for review and approval along with calculations, wherever applicable.

8.9 CUTTING AND REMOVAL OF PAVING

8.9.1 Whenever permitted by Authorities and/ or Company representative to open cut a trench in a paved road crossing or where the line is routed within the road pavement, the Contractor shall remove the paving in accordance with the restrictions and requirements of the Authorities having jurisdiction thereof or as directed by Company Representative. After laying the pipeline, in paved area, the trench shall be backfilled immediately to restore the area temporarily. Throughout the period of execution of work in such areas, the Contractor shall provide and use warning signs, traffic lights or lanterns, barricades, fencing, watchman, etc. as required by the local authorities having jurisdiction and/ or Company Representative.

8.9.2 For all roads, paths, walkways etc. which are open-cut, the Contractor shall provide temporary diversions properly constructed to allow the passage of normal traffic with the minimum of inconvenience and interruptions.

8.9.3 The paving shall be restored to its original condition after the pipeline is installed to the entire satisfaction of concerned authorities.

8.10 GRADES, BENDS AND FINISH OF TRENCH

8.10.1 The trench is to be well made to provide a firm, uniform and continuous support for the pipe. Bends shall be made in the pipe at significant changes in grade of the trench. Company reserves the right to set the grade of the trench at location of the bends if so desired, in which case Contractor shall excavate, at no extra cost, the trench and bend the pipe to such a grade. Company desires reduce to a minimum the required number of cold field bends to lay the pipe to conform to the general contour of the ground and maintain a normal cover. This can be accomplished by cutting the trench slightly deeper at the crest of ridges and by gradually deepening the trench in approaches to crossings. Such trenching work shall be done by Contractor at no extra cost to the Company.

8.10.2 Company intends that there will be a minimum of hand grading of the trench bottom. However, to achieve this, Contractor will have to dig as square a bottom of the trench as possible with the equipment. This in part can be obtained by adjusting and adopting the crumbing shoe and digging teeth of the trenching machines and by use of a drag behind the trenching machines or manually dressing-up the same. Contractor shall do such hand work in the trench as is necessary to free the bottom of the trench from loose rock and hard clay

Copyright VCS Quality Services Private Limited – All rights reserved

and to trim protruding roots from the bottom and side walls of the trench.

8.11 PADDING

8.11.1 In all cases where rock or gravel or murrum/ hard soil is encountered in the bottom of the trench, trench padding shall be provided. The thickness of padding shall be at least 200 mm or more throughout the trench so that thickness of compacted padding shall not be less than 150mm. In those areas, trench shall be suitably excavated to keep min cover as required. Company will decide the extent of trench padding required.

8.11.2 Acceptable padding shall be placed under the pipeline before its installation, and around after installation to establish at both sides and on top of the pipe a permanent layer of padding. The thickness of compacted padding on top of pipe corrosion coating shall be at least 150mm.

8.11.3 Padding materials that are approved by Company shall be graded soil/ sand and/ or other soft materials containing no gravel, rock, or lumps of hard soil. Sand used for padding shall-pass through sieve size ASTM C33 No. 16.

8.11.4 When specified in the Contract, rock shield may be used in place of or in addition to sand padding as indicated above. Such rock shield shall be in accordance with the specification issued for the purpose and shall be subject to Company approval.

8.11.5 Padding shall also be required at other locations where select backfill is specified in the drawings and documents such as seismic zone crossings, station approaches, etc. Type of padding soil and thickness of padding in such areas shall be as specified in drawings and documents.

8.12 TRENCH PROTECTION

8.12.1 The trench shall be maintained in good condition till such time the pipeline is laid. When required, lumber, sheet-piling jacks or other materials that may be necessary to shore the trench, in order to prevent caving, shall be provided and removed by the Contractor.

8.12.2 The Contractor shall dewater the trench, if necessary, using well point system or other suitable systems, or do what else might be required to excavate the trench, install the pipe in it and backfill the trench as per approved procedure with no extra cost to company.

9. BLASTING

9.1 GENERAL

9.1.1 Contractor shall be responsible for carryout of trenching in rocky areas by controlled blasting and removal of scattered rock and debris caused by the blasting from the Right-of-Use and/ or adjacent property, as part of his work. All necessary precautions shall be taken to prevent stones from falling outside the ROU and in cultivated areas and to avoid any damage to the installations and properties existing nearby. Blasting and removal of debris shall be carried out prior to stringing the pipes.

9.1.2 The Contractor shall acquaint himself and comply with all the applicable local laws and regulations concerning storing, handling and the use of explosives. All such laws, regulations and rules etc., as enforced from time to time shall be binding upon the Contractor. National/ Local Laws and Regulations shall take precedence over this

Copyright VCS Quality Services Private Limited – All rights reserved

specification in the event of conflict. The requirements stated herein, however, in no way relieve the Contractor of his responsibility of carrying out safe blasting operations and the Contractor shall be solely responsible for damages and claims thereof.

9.1.3 Every possible precaution shall be taken to prevent injuries and damages to persons and properties during blasting operations. The Contractor shall be responsible for removal of scattered rock and debris caused by the blasting from the ROU and/ or adjacent property.

9.1.4 The use of explosives requires an approval from the Chief Inspector of' Explosives and/ or his authorized Inspector. It shall be the responsibility of the Contractor to obtain all such permits 'and observe all requirements regarding the safe storage handling and use of explosives.

9.1.5 Blasting and removal of debris shall be carried out prior to stringing the pipes.

9.1.6 Company reserves the right to refuse blasting where possible danger exists to property, existing utilities or other structures. In such locations other methods of extracting rock shall be proposed by Contractor and shall be approved by Company.

9.2 BLASTING CLOSE TO EXISTING SERVICES

Contractor shall prepare a detailed blasting procedure incorporating the following:

- Loading of explosives.
- Drilling of new holes and extending existing holes.
- Handling of explosives at site.
- Tamping explosives into holes.
- Machines, tools and cables required.
- Initiation of blasting.
- Safety of personnel.
- Vibration control.
- Blast pattern and shot size establishment.
- Misfires.
- Emergency procedures
- Following approval by the Company representative, the procedures shall be closely followed by the Contractor and demos need to be shown by the contractor to assess the blasting impact on other existing services and / or facilities. Accordingly suitable modifications to be considered till the procedure is finally qualified and approved by the company. .

10. PIPE BEND/ BENDING

10.1 GENERAL

10.1.1 The Contractor shall preferably provide for changes of vertical and horizontal alignment by making elastic bends. Cold field bends may be provided, at the Contractor's option for change of direction and slope.

10.1.2 In general, elastic bends or one or more cold field bends will permit construction of most of the direction changes required, however where in the judgment of Company, due to site conditions, even cold field bends cannot be accommodated, the Company may allow use of

Copyright VCS Quality Services Private Limited – All rights reserved

hot induction bends.

10.1.3 Use of miter bends for change in direction and slope is not permitted.

10.2 ELASTIC BENDS

The minimum allowable radius for elastic bends for corrosion coated as well as concrete coated buried pipeline shall be as indicated in relevant job standards document drawings elastic bend shall be continuously supported over its full length. A radius smaller than permitted in elastic bending shall require a cold field bend.

10.3 COLD FIELD BENDS

10.3.1 The minimum radius of cold field bends shall be as indicated in the below table:

Nominal Pipe Size (Inch)	Minimum Bend Radius
12 and below	21D
14 to 16	30D
18 and above	40D

10.3.2 Contractor shall use a pipe bending machine of adequate capacity and employ recognized and accepted methods of bending of coated pipe in accordance with good pipeline construction practice. However, bending machines shall be capable of making bends without wrinkles, buckles, stretching and with minimum damage to the coating.

10.3.3 Contractor shall, before the start of the work, submit and demonstrate to Company a bending procedure, which shall conform to the recommendations of the manufacturer of the bending machine. The Qualification shall be done for the maximum bend angle in one pipe length. The procedure shall include amongst other steps-lengths, maximum degree per pull and method and accuracy of measurement during pulling of the bend. The bending procedure and the equipment used shall be subject to Company's approvalwith regard to the quality of bend in terms of wrinkles / buckles, stretches and any other damages.

10.3.4 Pipes with longitudinal welds shall be bent in such a way that the weld lies in the plane passing through the neutral axis of the bend, which shall be installed positioning the longitudinal weld in the upper quadrants. If horizontal deviations are to be achieved by joining more adjacent bends, the bending of the pipe lengths shall be made by positioning the longitudinal welds alternatively 70mm above and below the plane passing through the neutral axis in-such a way that the bends are welded with the longitudinal welds displaced by about 150mm and situated in the upper quadrants. In case of vertical bends formed, from a number of pipe lengths, the longitudinal welds shall be positioned on the plane passing through the neutral axis of the bend to the right and left alternatively.

10.3.5 The pads, dies and rolls of the bending equipment shall have relatively soft surfaces to avoid damage to the pipe coating. Where applicable, fully retaining bending shoes shall be used. Roller type bending machines are preferred.

10.3.6 The ends of each bent length shall be straight and not involved anyway in the bending. The

Copyright VCS Quality Services Private Limited – All rights reserved

length of the straight section shall permit easy joining. In no event shall the end of the bend be closer than 1.5m from the end of a pipe or within one meter of a girth weld.

10.3.7 The ovalization caused on each pipe by bending shall be less than 2.5% of the specified diameter at any point. Ovalization is defined as the reduction or increase in the internal diameter, of the pipe compared with the nominal internal diameter. A check shall be performed on all bends in the presence of Company Representative by passing a gauge consisting of two metallic discs with a diameter equal to 95% of the nominal internal diameter of the pipe connected rigidly together at a distance equal to 300mm.

10.3.8 The wall thickness of finished bends, taking into account wall thinning at the outer radius, should not be less than the design thickness. An indication of wall thinning as a percentage is given by the following empirical formula.

$$\text{Wall thinning} = \frac{50}{n+1}$$

10.3.9 Where 'n' is the inner bend radius divided by pipe diameter. Pipes with measured wall thickness greater than the nominal wall thickness (i.e. with +ve tolerance) shall normally be used for making cold field bends.

10.3.10 Cold bend pipes on site shall have the corrosion coating carefully checked with the aid of a holiday detector for cracks in the coating down to the pipe wall. It must also be checked whether the coating has disbonded from the pipe wall during bending by beating with a wooden mallet along the outer radius. Any defects or disbonding of the coating caused during bending (also forced ridges in the coating) shall be repaired at the Contractor's expense in accordance with Company approved procedures.

10.3.11 When pipelines are laid in parallel, the horizontal bends shall be concentric.

10.4 MITER AND UNSATISFACTORY BENDS

All bends showing buckling, wrinkles, cracks or other visible defects or which are in any way in disagreement, in whole or in part, with this specification shall be rejected.

No miter bends shall be permitted in the construction of the pipe line. Contractor shall cut out and remove any bend or bends, which do not meet the specifications and shall replace the same with bends complying with specification at no additional cost to the Company. In the event the contract provides for supply of line pipe by Company, the pipes required for replacement will be furnished by Company, but the cost of replacement of such pipes shall be borne by Contractor.

Cutting of cold field bends for any purpose are not permitted.

10.5 HOT INDUCTION BENDS

Use of Hot Induction bends is as indicated in alignment sheets, crossing drawings and station drawings. Cutting of factory made bends for any purpose is not permitted.

11. LINEUP AND WELDING

11.1 PIPE CLEANING

Prior to aligning and welding of pipes, each length of pipe shall be thoroughly examined

Copyright VCS Quality Services Private Limited – All rights reserved

internally and externally to make sure that it is free from visual defects, damage, severe corrosion, dirt, animals or any other foreign objects. Each length of the pipe shall be adequately swabbed, either by use of canvas belt disc of proper diameter, or by compressed air blowing or by other methods approved by Company Representative. Directions of Company Representative shall be followed in case of damaged/ corroded pipes. Each length of pipe shall be pulled through just before being welded.

11.2 REPAIR OF PIPE DEFECTS

It is Contractor's responsibility to repair all internal and/ or external defects.

11.2.1 Acceptability of defects in the pipe detected during inspection at the work site shall be determined in accordance with latest edition of Company's own material specification or code ASME B31.8/ B31.4 whichever is more stringent.

11.2.2 The maximum permissible depth of dents in pipes shall be as per applicable line pipe specification issued by Company.

11.2.3 Dents, which contain a stress concentrator such as scratch, gauge, arc burn or groove, and dents located at the longitudinal, spiral or circumferential weld shall be removed by cutting out the damaged portion of pipe as a cylinder.

11.2.4 Repair on line pipe shall be executed as specified in Company's material specification or Code ASME B 31.8/ B 31.4, whichever is more stringent. A record of all repairs shall be maintained by Contractor. This record, provided with the pipe identification number shall be submitted to the Company.

11.2.5 If due to cutting or repairs, the pipe identification number is removed, it shall be reprinted immediately by Contractor in the presence of Company. In the event, the Contract provides for supply of line pipe by Company, Contractor shall be charged for any pipe length due to loss of identification number. No pipe without identification number shall be transported and/ or welded into the pipeline.

11.2.6 Repair of damaged pipe ends by hammering and/ or heating is not allowed. If the dented area is minor and at least 200mm away from the pipe end, and the steel is not stretched, severed, or split in the Company's opinion, the pipe may be straightened with a proper jack.

11.3 PIPE HANDLING AND SKID SPACING

11.3.1 When lifting pipe, care must be taken not to kink or overstress it. Pipe slings approved by Company Representative shall be used. The Contractor shall submit the method of skidding and skid spacing to Company Representative for approval. A strip of soft material shall be placed in between skid and pipe to protect the external coating from damage.

11.3.2 Skids shall be used to raise the pipe sufficiently to accommodate welding and wrapping of joints. Skids shall be at least 1.20 meter long and of sufficient height to maintain pipe bottom at least 500 mm above ground. Width of skids in contact with the pipe shall be 200 mm and 150 mm for pipe with outside diameter (OD) ≥ 324 mm and OD < 324 mm respectively.

11.3.3 Crosses shall be installed at frequent intervals, at least every 10th support with greater number required at bends and undulating ground.

11.4 WELDING

Copyright VCS Quality Services Private Limited – All rights reserved

11.4.1 All rust and foreign matters shall be removed from the beveled ends by power operated brush. This shall be effected inside & outside and for a minimum distance of 25 mm from edge of bevel. The bevel shall be thoroughly inspected at this stage. Should laminations, spilt ends or manufacturing defects in the pipe observed, the length of the pipe containing such defects shall be removed from the line in accordance with relevant specification.

11.4.2 The welding of the pipe ends shall be done strictly in compliance with the specification for welding.

11.4.3 The Contractor shall cover the open end of the pipe string during welding to prevent draft. The ends of the pipe string shall be located such that water, mud and debris cannot enter the pipe.

11.5 NIGHT CAPS

11.5.1 At the end of each day's working or every time when joining and welding operations are interrupted, the open ends on the welded strings of pipes shall be capped with mechanical metal cap or plug, approved by Company Representative , so as to prevent the entry of dirt or any foreign matter into the pipeline. These covers shall be removed just before resuming welding operations. Night caps shall also be fixed to the welding completed pipeline section which shall be removed only during Tie-in welding. Whenever the welded strings of pipes are left to be tied in later and at road, railroad, river, marshy crossings, etc, night caps shall be welded to the ends of the pipe. Work at these locations, the end caps shall be cut as a cylinder bevel ends prepared. Cut shall be made at least 25 mm from the end.

12. LOWERING-IN

12.1 TRENCH CLEANING

Lowering can start after removal from ditch bottom of all off cuts, pipe supports, stones, roots, debris, stakes, rock projections below underside of pipe and any other rigid materials which could lead to perforation or tearing of the coating. Sand padding, graded soil and/ or other materials containing no gravel, rock shall be provided as required in accordance with clause 8.12 of this specification in such a way to get an even surface for pipe laying.

12.2 LOWERING-IN

12.2.1 Lowering shall follow as soon as possible, after completion of the joint coating of the pipe string, after the trench bottom is prepared and levels checked for proper fit and cover.

12.2.2 Before lowering in, visual inspection and holiday detection using a full circle holiday detector shall be carried out for the pipe coating as well as joint coating and all repairs carried out as per relevant Specification. All points on the pipeline where the coating has been in contact with either the skids or with the lifting equipment during lowering shall be carefully inspected for damages, dents or other defects and shall be completely repaired.

12.2.3 The Pipeline section which is made ready for lowering shall be checked for debris and if necessary cleaned from inside using Pig with dry compressed air to remove debris.

12.2.4 The pipeline shall be lifted and lowered into trench using suitable equipment having flat belts of nonabrasive material. Care shall be exercised while removing the flat belts from around the coated pipe after it has been lowered into the trench to avoid any damage to coating. Lowering-in utilizing standard pipe cradles shall be permitted if the Contractor demonstrates

Copyright VCS Quality Services Private Limited – All rights reserved

that pipe coating is not damaged. No sling shall be put around field joint coating.

12.2.5 Laying shall be carried out under safe conditions so as to avoid stresses and temporary deformations of the equipment's, which may cause damage to the pipeline itself and to the coating. In case of localized points where the right-of-use is restricted to the minimum necessary for the transit of mechanical equipment, the laying shall be carried out using other suitable means. The pipe shall be placed on the floor of the excavation, without jerking, falling, impact or other similar stresses. In particular, care must be taken that the deformation caused during the raising of the pipe from the supports, does not exceed the values for the minimum allowable radius of elastic curvature, so as to keep the stresses on the steel and on the coating within safe limits. The portion of the pipeline between trench and bank shall be supported by as many side-booms as required and approved by Company for holding the line in gentle S-curve maintaining minimum elastic bend radius -as specified in job standard. Lowering in and back-filling shall preferably be carried out at the highest ambient temperature.

12.2.6 Lowering-in shall preferably be carried out at the highest ambient temperature. Where water is present, no lowering is permitted until the ditch is drained to the extent and for the time necessary to make visual inspection possible of the bed. Following such inspection, the presence of water will be permitted, provided that it is not so high as to cause cave-in of the walls of the trench or floating of the pipeline before backfilling when anti-buoyancy measures are not provided for the pipe. Where water in the trench cannot be practically removed, the lowering-in of the pipeline shall be permitted only after ensuring pipe negative buoyancy is sufficiently increased by continuous concrete weight coating or by placement of gravel filled non degradable fabric bags as per requirements of the Contract and approved by Company representative . In any case, pipe shall not be lowered into a trench containing water until the longitudinal profile of the trench bottom has been fully surveyed by Contractor and approved by Company representative.

12.2.7 Contractor shall take precautions immediately after lowering in to prevent the movement of the pipe in trench.

12.2.8 Contractor shall close the two ends of the lowered section with night caps against ingress of water/ mud or any foreign material in the section.

12.2.9 When parallel pipelines are lowered into same trench, the minimum distances between the pipelines indicated in the approved drawings shall be maintained. Once the first pipeline has been positioned, it shall in no way be disturbed while lowering of the subsequent pipelines. At every seven meters along the trench sand/ earth filled bags shall be placed between the parallel pipelines so as to ensure maintenance of the minimum stipulated distance between the parallel lines.

12.2.10 Subsequent to lowering a pipe section, level of the trench bottom and level by the side of the trench shall be taken at those locations where levels were taken prior to lowering. Cover shall be ascertained based on the level difference. If the cover is not as per the requirements of this specification, the pipe section shall be removed from the trench and the trench rectified, so that the cover is as per the requirements of this specification is met.

12.3 OVERHEAD SECTIONS AND SECTIONS IN TUNNEL

12.3.1 The following works shall be completed before proceeding with the assembly and laying of overhead pipeline.

Copyright VCS Quality Services Private Limited – All rights reserved

- Construction of the pipe support structures.
- Paints and/ or coating of the pipe work, as indicated in the engineering specification.

12.3.2 The erection of the supports shall be carried out taking care that the elevation and alignment is in accordance with the drawings.

In the case of metal work supports, pre-fabrication and/ or assembly shall take into account the maximum allowed free span and the supports shall not interfere with the pipeline welds.

12.3.3 In case roller supports are used, the rollers shall be lubricated, and then checked for smooth rotation and, in case of seizure, the defect shall be repaired or roller shall be replaced. In the case of overhead section where the pipeline is slanting, the alignment of the end supports shall be made after placing the pipeline in position. Before installation of the pipe section, all the rollers shall be perfectly centered acting on the seat of the supports plates.

The above alignment operations shall be carried out before connecting the overhead section with the end of the buried section.

12.3.4 Lifting, moving and laying of the pipeline shall be carried out in accordance with the provisions of clause.

An insulation sheet shall be installed to isolate the pipe from the support or support from the earth. The sheet shall be hard polyethylene at least 5mm thick. It shall extend at least to 1 cm outside the saddles or clamps.

12.3.5 Moving supports, if any, shall be centered on their support and allow for a movement of at least 300mm in both directions.

12.3.6 A comprehensive report/ method statement on the laying operation to be used shall be submitted to the Company well in advance for approval. The report as a minimum shall include, but not limited to the following:

- Method of installation by lifting (as a preferred method).
- Pulling method and related calculations, whenever lifting method cannot be used.
- Pulling device and its characteristics including available pull force and FOS/ margin available w.r.t. calculated pulling load.
- Method of anchoring the pulling device.
- Characteristics of the pulling rope.
- Braking device, if any.
- Pipeline assembly system.

13. BACKFILLING

13.1 Backfilling shall not be done until the pipe and appurtenances have the proper fit and the pipe is following the trench profile at the required depth that will provide the required cover and has a bed which is free of extraneous material and which allows the pipe to rest smoothly and evenly. Contractors shall take Company’s approval before start of backfilling. If any backfilling is done without Company's approval, Company will have the right to require removal of the backfill for examination, and the cost of such uncovering and refilling shall be borne by Contractor. Backfilling of trench in water courses shall be carried out as per the relevant specifications issued for the purpose.

Copyright VCS Quality Services Private Limited – All rights reserved

13.2 Backfilling shall be carried out immediately after the pipeline has been laid in the trench, inspected and approved by the Company Representative, so as to provide a natural anchorage for the pipeline, thus avoiding long exposure of coating to sliding down of trench side's, damage of coating and pipe movement in the trench. If immediate back filling is not possible, a covering of at least 200mm of earth, free of rock and hard lumps shall be placed over and around the pipe and coating. On no account the top soil from the ROU be used for this purpose. In general, the trench shall be dry during backfilling. Deviations thereof must have prior approval of the Company.

13.3 The backfill material shall contain no extraneous material and/ or hard lumps of soil, which could damage the pipe and/ or coating or leave voids in the backfield trench.

13.4 After the initial backfill has been placed into the trench to a level slightly above the surrounding ground, Contractor shall compact the backfill material. The surplus material shall be neatly crowned directly over the trench and the adjacent excavated areas on both sides of the trench, to such a height, which will, in Company's opinion, provide adequately for future settlement of the trench backfill. The crown shall be high enough to prevent the formation of a depression in the soil when backfill has settled into its permanent position. Should depression occur after backfill, Contractor shall be responsible for remedial work at no extra cost to Company. Surplus material, including rock, left from this operation shall be disposed of to the satisfaction of land owner or authority having jurisdiction at no extra cost to the Company.

13.5 Rock, gravel, lumps of hard, soil or like materials shall not be backfield directly onto the pipe unless padding and/ or rock-shield has been provided as per the specification. Where rock, gravel, lumps of hard soil or like materials are encountered at the time of trench excavation, sufficient earth, sand or select backfill materials shall be placed around and over the pipe to form a protective cushion extending at least to a compacted height of 150mm above the top of the pipe.

13.6 In cases where pipeline crosses through seismic zome, as indicated in project document, the backfilling shall be done with select backfill as per the drawing provided elsewhere.Select backfill materials for padding that are acceptable to Company shall be soil, sand, clay or other material containing no gravel, rock or lumps of hard soil. All these works shall be carried out by Contractor at no extra cost to Company.

13.7 When the trench has been dug through driveways or roads, all backfills shall be executed with sand or a suitable material as approved by Company Representative and shall be thoroughly compacted. In certain cases, special compaction methods, such as moistening or ramming of the backfill in layers may be required by any public or private authority having jurisdiction over a road, street or driveway. Authorities may also require the top section of trench of such paved areas to be backfill with crushed rock or some other purchased material and surface repaved. The Contractor shall comply with said requirements at no extra cost to Company. Backfilling and compaction of trenches crossing public thoroughfares shall be carefully and expeditiously carried out so as to reduce to a minimum the time during which the public thoroughfare is out of service.

13.8 Trenches excavated in dikes which are the property of railways or which are parts of main roads shall be graded and backfield in their original profile and condition. If necessary, new and/ or special backfill materials shall be supplied and worked-up. The materials required may include gravel, special stabilization materials or stabilized mixtures. Moreover, special

Copyright VCS Quality Services Private Limited – All rights reserved

processing and/ or compacting methods shall require the approval of Company and/ or competent authorities.

13.9 Stone-pitching/ cement lining of Dyke walls if dismantled during excavation shall be restored to its original condition after backfilling and compaction to the entire satisfaction of Company and concerned Authorities.

13.10 The trench in irrigated and paddy fields shall be backfield to within 300mm of the top, then rammed and further backfield until the trench is completely- backfield. Surplus material remaining after the operation shall be spread over the ROU.

13.11 At the end of each day's work, backfilling shall not be more than 500 meters behind the head end of lowered-in pipe, which has been padded and approved for backfill. The backfill shall be maintained by Contractor against washouts and spreading etc., until the completion and final acceptance of the work by Company.

13.12 The Contractor shall furnish materials and install breakers in the trench in steep areas (slope generally 10% and more) for the purpose of preventing erosion of the back fill. The type of breakers installed shall be as per applicable Contract drawings. Sacks filled with sand mixed with cement in the ratio of 6:1 shall be placed to act as a trench barrier. Such works shall be at no extra cost to Company. The Contractor shall pay attention to the direction of backfilling in such steep areas. Barrier consisting of two rows of sacks across the trench built on a staggered basis to provide maximum stability, and keyed into the trench wall may be used in gently sloping locations. The top of trench barriers shall be 200 mm - 300 mm below ground level. Trench barriers shall be bedded onto undisturbed ground. No voids shall be left in the trench barrier wall including between the wall and the pipe.

13.13 In addition to trench barriers when potential to backfill wash out exist due to water flow, shallow surface ditches shall be dug as necessary to channel water diverted by the trench barrier away from the pipe trench and into normal drainage followed before laying of the line. In no case, the water is to be drained via the trench or via channels other than those followed before the line was laid.

13.14 Stabilization of backfill shall be carried out by the Contractor in sandy areas and other such places, as directed by the Company representative. The Contractor shall carry out the stabilization to have a consolidated cover over the pipeline at no extra cost to Company.

13.15 The backfill shall be stabilized preferably with 150 mm layer of marl, mattresses of gatch other than straw or other stable materials. The width of stabilization shall be at least 3.0 meters on either side of the pipeline, plus one meter for every 10 meters height of sand dune (where the line passes through the dune areas).

13.16 Contractor shall leave the pipe uncovered at certain locations to allow Company to survey the top of the pipe and the level of the pipeline in the backfield trench. Within 48 hours after backfilling, Company shall have carried out such survey and informed Contractor of any realigning, if required. Thereafter Contractor shall compact the backfill.

13.17 Temporary markers shall be installed during backfilling and the survey as per specification to locate the pipeline axis. These markers shall then be replaced with permanent pipeline markers.

13.18 Backfilling shall be preferably carried out at the highest ambient temperature.

Copyright VCS Quality Services Private Limited – All rights reserved

13.19 In certain areas like U/G pipeline crossings, overhead power cable crossings etc, special care to be taken by putting concrete slab/ plastic grating before backfilling. Size and thickness of concrete slab/ plastic grating shall comply applicable job standard and approved by Company.

14. TIE-IN

14.1 The unconnected sections of the pipeline at various locations have to be tied in after the sections are coated, lowered and backfield. The sections to be connected shall have at the ends, sections of over lapping, uncovered pipe of sufficient length to absorb, without inducing excessive stresses in the steel, small displacements necessary for perfect alignment and connection of the ends.

14.2 Tie-in shall preferably be carried out at ambient temperatures corresponding to the average operating temperature in the case of a pipeline conveying fluids at normal temperatures and at the maximum ambient temperature in the case where the pipeline is carrying fluids at high temperature.

14.3 Contractor shall carry out tie-in-welding (including necessary cutting, bevelling, grinding of pipe weld seams and line-up etc.) cleaning, priming, coating and backfilling for the tie-in portion as per relevant specifications. Contractor shall also excavate the required bell-holes for the welding. Bell holes made to facilitate welding shall provide adequate clearance to enable the welders to exercise normal welding ability and skill. All tie-in welds shall be radiographically examined.

14.4 The tie-in should be done in such a way as to leave a minimum of strain in the pipe. If necessary, with respect to the trench, realigning of the pipe shall be done to eliminate forcestrain in the pipe by the Contractor at no extra cost to Company.

14.5 If a pup end cannot be avoided for tie-in, the minimum length that shall be added is 1.0 meter and two or more such pups shall not be welded together. All cut-off lengths greater than 1.0 meter shall be moved ahead in order to be welded into the pipeline at a suitable location. Tie-in with two or more pups may be used provided that they each have minimum length of 1.0 meter and are separated by an entire length of pipe. In no case more than three (3) welds shall be permitted on a 10 meter length of pipeline.

14.6 In connecting pipes, special items, fittings and equipment where different wall thicknesses are to be welded, Contractor shall follow the procedures indicated in ASME B3l.8/ ASME B31.4, as applicable. The required tapering shall be done by Contractor at no extra cost to Company.

14.7 For tie-in of adjacent sections of pipeline already pressure tested, the pup used for tie-in shall be of single length or off-cuts of pipe, which have already been hydrostatically tested. Contractor shall take care that sufficient number of pretested pipes with different wall. Thicknesses are readily available.

15. SPECIAL INSTALLATIONS ON THE PIPELINE

15.1 GENERAL

15.1.1 In addition to constructing the pipeline, Contractor shall also install certain other auxiliary facilities and appurtenances.

15.1.2 Contractor shall do all work necessary at each of the installations to provide facilities, which

Copyright VCS Quality Services Private Limited – All rights reserved

are complete in all respects and ready for operations.

15.1.3 Without limiting the generality thereof, the work required to complete the installations shall, where applicable, include all site surveys, site preparation, filling, grading, fencing, foundations, installation of block valves, side valves, pipe work, pipe supports, pressure gauges, mechanical facilities, civil work, painting, installation of all electrical equipment's, motors, cables, conduit, wiring and fixtures and hooking up of same; installation of all instruments, piping, valves and fittings; mounting of all instruments and making all piping and electronic connections, etc.

15.1.4 On completion, all elements of each entire installation shall be checked out and tested for full and correct operation in the presence of, and to the satisfaction of Company. All work shall be carried out strictly in accordance with the appropriate codes, the approved drawings, and this and other related specifications.

15.1.5 Contractor shall fabricate all piping and install valves and fittings as required by the detailed engineering fabrication drawings prepared by him and approved by Company. Piping fabrication drawings shall be prepared by Contractor based on AFC drawings and approved by Company Representative at site.

15.1.6 Stainless steel lines will he "swaged" using permanent fittings installed with a hydraulic device.

15.2 MAINLINE VALVES STATIONS (MLV'S)

15.2.1 The Contractor shall install Mainline Valve assemblies as shown in the approved for construction drawings issued for the purpose and requirements of this specification. The Contractor shall completely assemble, test and make the MLV assembly including all related instruments etc. fully functional prior to installation in the pipeline.

15.2.2 The valve stem shall be installed in the vertical position. Valves with flow arrows shall be installed according to the normal flow in the pipeline. During welding the valve shall be in open position. Care shall be taken to avoid entry of sand particles etc. to valve body, seals etc. during assembly and installation.

15.2.3 Valve shall be installed in the pipeline in horizontal position only unless indicated otherwise in approved drawings. Installation shall be done in such a way that there is no strain in the welded joint while the pipeline at upstream and downstream side is straight.

15.2.4 The equipment and tools used for lifting and handling shall never be driven through hand wheel, valve stem, flange joints and other parts, which may cause damage / misalignment.

15.2.5 Entire MLV assembly, after fabrication, shall be tested hydrostatically ex-situ as per applicable specifications to a test pressure equal to 1.25/ 1.5 times the design pressure as applicable. As applicable all weld joints and piping components shall be inspected for leakage. Leakages if any shall be repaired and assembly retested.

15.2.6 Suitable reinforced concrete foundation(s) as per approved for construction drawings shall be constructed on which the valve assembly shall be firmly installed.

15.2.7 The Contractor shall carry out necessary excavation; cutting, bevelling and welding of the tie-ins required for the installation of such assembly. The final tie-in shall not be made until the

Copyright VCS Quality Services Private Limited – All rights reserved

valve is fixed in position.

15.2.8 The civil and structural work shall be carried out in accordance with the relevant specifications issued for the purpose and in accordance with the approved drawings, and as directed by Company representative. The work shall as a minimum include clearing, grading, filling, fencing, foundations, supports, etc. as required.

15.3 SCRAPER LAUNCHER AND RECEIVER FACILITIES AT STATIONS

15.3.1 Scraper launcher and receiver facilities at stations including the associated piping shall be fabricated and installed as per the approved for construction drawings. The Contractor shall completely assemble, test and make the scraper facilities including connected piping and all related instruments etc. fully functional prior to hook-up with the pipeline.

15.3.2 The Contractor shall maintain elevations shown on the approved drawings and carry out any pipe work adjustments, necessary for this purpose. Field cuts shall be square and accurate and field welds shall not be performed under stress of pipe ends.

15.3.3 The painting for the scraper stations shall be carried out as per relevant Specifications for Painting. The underground sections shall be coated with 3 Layer Polyethylene coating up to at least 300 mm above grade.

15.3.4 Entire scraper facilities including the associated piping, after fabrication, shall be tested hydrostatically to a test pressure equal to 1.5 times the design pressure as applicable. All weld joints and piping components shall be inspected for leakage. Leakages if any shall be repaired and assembly retested. Test pressure shall be maintained for minimum four (4) hours.

15.3.5 The Civil and structural works for the scraper stations shall be carried out as per the relevant specifications, in accordance With the approved for construction drawings. The work as a minimum shall include site survey, site preparation, clearing, grading, filling, fencing, foundations, etc. as required.

15.4 INSULATING JOINTS (IJS)

15.4.1 Pipeline insulating joints shall be installed in accordance with and at the locations specified in approved for construction drawings.

15.4.2 Pipe abutting insulating joints shall be aligned so that the joint is not subject to loads that induce bending or torsional moments in the joint during installation. During welding of in-line insulating joint, propagation of heat shall be avoided. To achieve this, the joint shall be kept cool by means of rags continuously wetted.

15.4.3 Insulating joints shall be electrically tested by the contractor prior to welding into the pipeline .The electrical conductance test shall be carried out using a Megger. Measurement of the insulation resistance across the joint shall be approx. one Mega Ohm. The test shall be repeated after installation and welding of the joint into the pipeline to verify that the insulating joint assembly is not damaged.

15.5 DIMENSIONAL TOLERANCES

These tolerances apply to inline items and corrections for other lines. These tolerances can be exceeded on items such as vents, drains, dummy supports, field supports, temperature and

Copyright VCS Quality Services Private Limited – All rights reserved

pressure connections, where the deviation will not affect another spool.

A. General dimensions such as face to face, face or end to end, face or end to center, and center to center: ± 3mm.
B. Inclination of flange face from true in any direction: 4mm per meter.
C. Displacement of branch connection from indicated location:± 1.6mm. When multiple branches are involved, the displacement of the branches shall not exceed 3mm from a common point.

15.6 FLANGED CONNECTIONS

Contractor shall ensure that prior to final bolting, all flange faces are parallel and centered, according to standard practice. Contractor shall not use bolting forces as a means for attaining alignment. A gasket of required size and quality shall be installed between the flanges at each joint.

Bolts shall be tightened in diagonal sequence and shall be centered with equal amounts of thread visible on both sides. Bolts shall be uniformly tightened to produce a leak-proof joint. Bolts that yield during-tightening shall be removed and discarded. It is mandatory that a torque wrench is used for bolt tightening.

15.7 THREADED CONNECTIONS

Damaged threads shall be cut from the end of a run and the pipe shall be rethreaded. Contractor shall properly align all threaded joints. Pipe entering unions shall be true to centerline so the union will not be forced during make-up. The threaded pipe shall not project through fittings to cause interference with valves or other operating mechanisms.
Except for the threaded connections of instruments, which will require periodic testing and maintenance, all threaded joints shall be seal welded. The latter joints shall be made up without pipe joint compound and with a minimum of oil from the thread cutter. Seal welds should taper into the pipe with as little discontinuity as possible, and should cover all threads. All seal welds shall be tested with DP, MP testing.

15.8 WELDED CONNECTIONS

Where the ends of the piping components being welded have an internal surface misalignment exceeding 1.6mm, the wall of the component extending internally shall be trimmed by machining so that the adjoining internal surfaces will be approximately flush. All welding shall be performed in accordance relevant specification.

15.9 PAINTING

All exposed surfaces like piping, valves, structures, and miscellaneous appurtenances shall be painted in accordance with the specifications issued for this purpose.

15.10 COATING OF BURIED INSTALLATIONS, ETC.

All buried valves, insulating joints, flow tees, bends, other in-line fittings and appurtenances shall be coated with 100% solid high build epoxy (minimum 500 micron THK) or any other equivalent suitable Company approved coating at no extra cost to Company. For buried pipes and LR bends, heat shrink sleeves relevant specification for Field Joint Coating shall be used .Contractor shall submit to Company a report regarding the method of application and the materials used along with all test certificates. Only after obtaining written approval from the

Copyright VCS Quality Services Private Limited – All rights reserved

Company, Contractor shall commence the work of coating.

15.11 CIVIL WORK

Civil work shall be performed in accordance with Specifications issued for the purpose.

16. THIRD PARTY FACILITIES

16.1 GENERAL

The proposed pipeline may be required to be constructed in or adjacent to easements established by others to carry services including overhead electric transmission cables, buried fiber optic transmission cables, telephone and power cabbies gas, water and other pipelines, etc. Though the Company has endeavored to identify and locate such services known to cross or closely run parallel to the pipeline, it is possible that some such services may not have been fully delineated during the surveys and/ or changes to the services identified have occurred since the Company's surveys. The Contractor shall be responsible for delineating and protecting all such services while executing the works.

Where the works covered under the Contract parallels or crosses an existing service, the requirements of the Authorities having jurisdiction over such a service related to protection of the service from damage during the construction activities shall be identified and complied with by the Contractor.

16.2 LOCATION AND PROTECTION OF BURIED SERVICES

The Contractor shall undertake an investigation to confirm the location of services identified by the Company, and to establish the location of any other services that may interfere with the pipeline construction.

Buried services when located shall be identified by hand excavation, and each service identified shall be marked with a stake and red flag. For all such services, location (UTM co-ordinates), angle of intersection, offset distance, size, depth of cover, etc. shall be recorded by the Contractor.

Temporary under-pinning or any other type of supports and other protective measures necessary to keep the interfering structure/ utility intact shall be provided by the Contractor at his own cost and shall be of such design as to ensure stability and safety against their possible failure.

Despite all precautions, should any damage to any structure/ utility occur, the owner/ authority shall be contacted by the Contractor and repair shall forthwith be carried out by the Contractor at his expense under the direction of Company representative and the concerned owner/ authority If the Contractor fails to repair in reasonable time, Company reserves the right to have the repair executed at the cost of the Contractor.

16.3 PROTECTION AGAINST INDUCED VOLTAGE HAZARDS

Where the work covered under the Contract parallels or is in close proximity to overhead high voltage power transmission lines, potentially dangerous voltages may be induced in the pipeline and in the working environment posing danger to personnel working on the pipeline. NACE Standard RP0177 shall be followed to the extent applicable during construction for safety purposes. The Contractor shall undertake following precautions in this regard.

Copyright VCS Quality Services Private Limited – All rights reserved

i. Personnel performing work within the area influenced by the high voltage system must wear electrically insulated footwear (e.g. rubber knee-boots) and insulating rubber or plastic gloves so that metal parts of the pipeline can be touched.

ii. During thunderstorms or whenever discharges are observed on insulators, all personnel must leave the area of the high voltage line and pipeline.

iii. Vehicles and equipment must be earth-connected. This should be effected by connecting an uninsulated cable or chain of adequate length to the underside of the vehicles/ equipment.

iv. To prevent electrical voltage in a non-buried section of the pipeline from rising to dangerous levels, the length of the pipeline sections that have been welded together before lowering must not exceed the length at which the maximum admissible voltage may be induced. This length may be calculated using an appropriate calculation method.

v. The welded connection between pipeline section yet to be lowered and section already buried must be at least 50 m from the nearest point of pylon base of a high voltage transmission line.

16.4 ADDITIONAL REQUIREMENTS WHEN WORKING AT LESS THAN 50 M FROM THE CENTRE OF THE HIGH VOLTAGE SYSTEM

When working at a distance less than 50 m from the center of a High Voltage system, following requirements shall be complied with.

i. The work must not be started until agreement has been reached with the authorities, who control the high voltage system, with regard to the safety measures to be adopted.

ii. Measures must be taken to prevent excavators and hoisting equipment from approaching high voltage lines within the following distances.

Voltage level	Radial distance
0- 50 kV	3 m
> 50 - 200 kV	5 m
> 200 - 380 kV	8 m

Measures to be taken in this regard may be as follows:

- Special selection of equipment, or limiting or blocking certain directions of movement, or limiting the operational area, thereby making it definitely impossible for any work to be done at a distance from the high voltage line of less than accepted minimum.

- In case the measures recommended above are not feasible, installation of clearly visible markers with no passage beyond this point' painted bright red and white must be done to prevent any work being done inside the danger area.

In the event that a vehicle, crane etc. should accidentally come into contact with a live line / conductor of a high voltage system or flash-over of electrical charge occurs, the driver must not get down from his vehicle because this will pose a serious threat to his life. The vehicle or crane must break the contact without any help from outside. The driver must not leave his vehicle until he has managed to leave the dangerous area, or alternatively, when the Electricity Authorities have given notice that the cable(s) have been put out of circuit. In case a serious fire starts in the vehicle, he is permitted to jump from the vehicle, clearing it as far

Copyright VCS Quality Services Private Limited – All rights reserved

as possible, while the jump should be possible at a dry sport.

17. MARKER

The Contractor shall fabricate and install all types of pipeline markers along pipeline route. Number and type of pipeline markers shall be as per As-built survey/ alignment sheet & reference specification and as directed by the authorities having jurisdiction. The Contractor shall install all types of markers in accordance with Specification for Markers and approved for construction drawings.

18. FINAL CLEAN-UP OF THE CONSTRUCTION RIGHT-OF-USE (ROU)

18.1 Contractor shall restore the ROU and all sites used. for the construction of pipelines, water crossings and other structures in accordance with Company's instructions, and deliver them to the satisfaction of Company.

18.2 SURPLUS MATERIALS

For Company supplied materials, after completion of work, the Contractor shall return all surplus materials at Company's designated areas.

The reconciliation of surplus free issue line pipes shall be as per the requirement of commercial condition of contract.

18.3 DISPOSAL

18.3.1 All surplus and defective materials supplied by Contractor and all trash refuse and spoiled materials shall be collected and disposed off by Contractor.

18.3.2 The ROU shall be cleared of all rubbish, broken skids, empty cans, card board, sacks, stumps, trash, and leftover construction material. All burnable matter shall be burned, but only after obtaining appropriate permits for such burning. If burning is not allowed, Contractor shall haul the clean-up material to an approved dumping area. All scrap metal and unburnable material shall be disposed of, in an appropriate manner, but never be buried in the ROU.

18.3.3 Surplus soil can only be removed from the Owner's plot after authorization by Company.

18.3.4 All dumping fees and royalty connected with the disposal of materials shall be to the account of Contractor.

18.3.5 All loose stones and rock exposed by the construction operations and scattered over the ROU or adjacent grounds shall be removed by Contractor and be transported to a location considered suitable by the land-owner and/ or tenant, or by authorities have jurisdiction, for satisfactory disposal. For stones, gravel or other hard material, which may be buried in the trench the provisions of the specifications shall apply with the understanding that the use of the land by the land-owner and/ or tenant will not be interfered with.

18.4 TEMPORARY STRUCTURES

All auxiliary structures such as bridges, culverts, sheet piling, posts, signs, etc., which were erected or installed by Contractor as temporary measure, shall be removed. However, it may be necessary to remove the fence of ROU during the maintenance period.

18.5 REPAIR OF DAMAGES

Copyright VCS Quality Services Private Limited – All rights reserved

18.5.1 Damages to roads, bridges, and private property shall be repaired by Contractor. All fences and other structures, which are damaged during construction, shall be restored to original.

18.5.2 Slopes, water course sides or banks which have been partially or totally demolished during the execution of the works shall be properly consolidated and restored (without waiting for their natural consolidation and setting) complying to requirement of the concern authorities. The bed of water-courses shall be restored to the original level. The banks and any excavated areas shall be restored to the original levels and contours. The banks shall also be stabilized.

18.5.3 All boundary stones, which have been moved or removed during the work, must be reset in their original location to the satisfaction of the landowner concerned.

18.5.4 On completion of clean-up, the ROU shall be restored to such stable and usable condition as may be reasonably consistent with the condition of the ROU prior to laying the pipeline. The Company shall be completely indemnified and held harmless by Contractor from any and against all claims, demands, losses, expenses etc. that may arise in this behalf or the Company may anyway suffer or sustain, relative to, arising out of, or in connection with same. The Company require from the Contractor signed releases from landowners regarding satisfactory indemnification and restoration of their lands.

18.5.5 Special precautions shall be taken near steep slopes prone to erosions and landslides. All necessary steps shall be taken to ensure the rapid growth of grass by providing wicker barriers and by regulating the drainage of surface waters.

18.5.6 All cadastral or geodetic markers, which may have been removed during the execution of the work, shall be restored in their exact position.

18.5.7 Ditches for which no instructions for their restoration have been issued, or restoration cannot be done due to absence of banks, shall be restored as instructed by Company. The bed of ditches crossed by the pipeline shall be cleaned over the full width of the ROU, also outside the ROU if necessary. This restoration might contain but is not limited to the supply and installation of proper materials for backfill and protection, the sodding or other precautions to prevent erosion or guarantee the stability. All work has to be done after deliberation and acceptance of the authorities and Company. Other field drains have to be restored over full width of ROU and if necessary also outside the ROU by hand and/ or special equipment as soon as possible.

18.5.8 Any subsidence, cave-ins, wash-outs, which have been caused during the pipeline construction and maintenance, caused by whatever reason within the edge of ditches and open drains, shall be repaired by Contractor immediately or at first notice given by Company.

18.5.9 After the clean-up, the ROU of pastures has to remain fenced considered suitable by the tenant and to be removed during the maintenance period. When agricultural and other traffic (requested by tenant) have to cross the ROU the cross-over have to be fenced with the same material as the ROU. If necessary, special materials have to be used to allow traffic on the cross-over. Fencing of the right-of-use as specified shall not be removed until Contractor has obtained written permission by Company. In general this has to be done during the maintenance period.

18.5.10 All openings in or damage to the fences or enclosures shall be repaired by installing new fencing of a quality, which shall be at least equal to the parts damaged or removed. Provisional gates shall be removed and replaced with new fencing. All repairs to fences and

Copyright VCS Quality Services Private Limited – All rights reserved

enclosures shall be carried out by Contractor to the complete satisfaction of Company, landowner and/ or tenant.

18.5.11 If, in the opinion of Company, the sod in pasture land has been damaged by vehicles, and wheel tracks are visible, the ROU shall be tilled with a disc-harrow or rotary cultivator several times. The damaged sod shall be firmly cut up and thoroughly mixed through the top-soil. In general, the ROU has also to be ripped. After this procedure no closed-in layers must be found and sufficiently loose top-soil 25 to 30 cm thick must be present. The whole procedure must be approved by Company. Subsequently, the entire ROU, which is part of pasture land, shall be prepared for seeding and fertilized by Contractor according to the instructions of Company.

18.5.12 In crop fields the tillage shall consist of passing over the land several times with a disc harrow, cultivating with a spading machine, or plow, to a depth of approx. 20 cm. In general the ROU has also to be ripped. After this cultivation process no closed-in layers must be found any more in the ROU. The equipment used and methods adopted shall require the approval of Company. Ripping has to be done with rippers with a distance of 50cm between the ripper blades. The type to be used shall be approved by Company.

18.5.13 Adequate numbers of saplings of any plant/ tree uprooted or cut during construction shall be planted along the route as per the direction of the Company and in accordance with the requirement of Authorities. The cost of sapling and its plantation shall be to Contractor's account.

The ROU and the backfilled trench in particular has to be finished in such a way that after settlement of the soil the fields are at their original level.

If during the maintenance period certain parts of the ROU are lower than the original level, Company can order Contractor to bring these parts to the original level.

In cases where heavy damage has occurred to the structure of the subsoil as a result of adverse circumstances, Company reserves the right to order Contractor to carry out special restoration work. Said special work can include:

- Spading with dragline (depth 30-80cm);
- Spading with dragline (depth 80-100cm);
- Fertilizing;
- Cover with sand.

If during clean-up operations, soilshortages become apparent outside the trench, Contractor shall supplement said soil shortage using suitable materials, approved by Company.

If site and/ or climatic conditions should render this necessary, Company shall have the right to order Contractor to suspend certain parts of the work related to the clean-up and postpone it to a later date.

18.6 SOIL SURPLUS

18.6.1 If on site, as a result of the work and after careful backfilling and compacting, a sub-soil surplus exists, this shall be worked up by grading and compacting below the sub-soil top layer and as a rule this shall be done in the same plot of land. It shall not be permitted to remove the surplus from the plot concerned, unless it concerns rejected soil, which has to be

Copyright VCS Quality Services Private Limited – All rights reserved

removed. Working up surplus soil or removal of rejected soil shall be considered to pertain to the work.

18.6.2 To work a soil surplus into the ground, Contractor shall remove an additional strip of top soil beside the trench. Next, the upper layer of sub-soil shall also be removed. Both soil types shall be stored separately across the width depending on the size of the soil, surplus. The soil surplus shall then be distributed across the trench thus widened, after which it shall be graded and compacted and subsequently the top layer of sub-soil and the top-soil shall be replaced in the correct order, in accordance with the Specifications.

18.6.3 In case Company has given prior permission for mixed excavation of the sub-soil as well as in cases where Company deems mixed excavation permissible, the above provision of separate storage of the upper layer of sub- soil shall not apply to the working up to the soil surplus.

18.6.4 In cases where the soil surplus can be worked up in others plots where soil shortages have arisen due to the work, this shall only be done after prior permission by land-owner, land user and Company.

18.7 SOIL SHORTAGES

18.7.1 If due to unforeseen circumstances during backfilling and compacting there should not be enough soil to fill the trench properly, or to install the crown height as stipulated, Contractor shall supply the necessary backfill material.

18.7.2 Soil shortages shall be supplemented and applied before the top-soil is replaced.

18.7.3 The soil to be supplied shall be worked up in those locations and into those layers where a soil shortage has been established. The quality of the supplemented soil shall be equal to that of the shortage.

19. MAINTENANCE DURING DEFECTS LIABILITY PERIOD

Defects Liability Period as defined as period of liability in the Contract.

Company reserves the right to carry out instrumented pigging survey of the completed pipeline.

Contractor shall be responsible for making good with all possible speed at his expense any defect in or damage to any portion of the work which may appear or occur during the Defects Liability Period and which arises either:

a) From any defective material (other than supplied by Company), workmanship or design, (other than a design made, furnished or specified by Company and for which Contractor has disclaimed responsibility in writing), or
b) From any act or omission of Contractor done or omitted during the said period.

If such defect shall appear or damage occur, Company shall forthwith inform Contractor thereof stating in writing the nature of the defect or damage.

If any such defect or damage be not remedied within a reasonable time, Company may proceed to execute the work at Contractor's risk and expense provided that he does so in a reasonable manner. Such defect or damage can be, but is not limited to:

Copyright VCS Quality Services Private Limited – All rights reserved

- Clean-up of ROU, including water courses.
- Sagging or sinking of site level or pipe supports.
- Sliding of ditch banks.
- Repair of fencing or removal of construction fencing.
- Repaving of pavements, repair of pavements and repair of Roads.
- Repair of coating, painting.
- Realigning markers, signs.
- Leak/ burst of pipe, leaking of flanges, washouts
- Short-circuit in casings

Construction defects such as dents, ovality, welding offsets/ defects, etc. detected during intelligent pigging survey, etc.

Company reserves the right to have the required Computerized Potential Logging Test executed during the Defects Liability Period and whenever weather conditions are more favorable for this job. The work shall (at or as soon as practicable after the expiration of the Defects Liability Period) be delivered to Company in the conditions required by the contractor, fair wear and tear excepted, to the satisfaction of Company. Contractor shall finish the work, if any outstanding, at the date of completion as soon as possible after such date and shall execute all such work.

Copyright VCS Quality Services Private Limited – All rights reserved

ENERGISING QUALITY

VCS QUALITY SERVICES PVT. LTD.

STANDARD SPECIFICATION

FOR
CONSTRUCTION OF PIPELINE, CROSSING ROADS, RAIL ROADS & MINOR WATER CROSSING

VPC – SS – PP - 2002

02	**04.01.2022**	**SR**	**MC**	**HK**	**HK**
Rev. No	**Date**	**Prepared By**	**Checked By**	**Approved By**	**Authorized By**

UNCONTROLLED COPY	:	**If printed**
CONTROLLED COPY	:	**If in soft and signed**

Copyright VCS Quality Services Private Limited – All rights reserved

REVISION RECORD						
Rev.	**Revision Date**	**Prepared by**	**Checked by**	**Approved by**	**Authorized by**	**Revision Description**
00	23.06.2017					Issued as Standard Specification (Document formatting, Cover Page, Doc numbering updated from SS-PL-006 to VPC-SS-PL-0006 keeping Revision Number Same)
		AS	SM	AD	SK	
01	28.01.2020					Document numbering updated from VPC-SS-PL-0006 to VPC-SS-PP-2002
		MB	MC	AD	SK	
02	04.01.2022					Revised as marked
		SR	MC	HK	HK	

Copyright VCS Quality Services Private Limited – All rights reserved

ABBREVIATIONS:

ASME	American Society of Mechanical Engineers
ASTM	American Society of Testing of Materials
API	American Petroleum Institute
OISD	Oil Industry Safety Directorate

Copyright VCS Quality Services Private Limited – All rights reserved

CONTENTS

1.0 SCOPE 5

2.0 REFERENCE CODES, STANDARDS AND SPECIFICATIONS 5

3.0 GENERAL 6

4.0 ROAD AND RAILROAD CROSSINGS 8

5.0 MINOR WATER COURSE CROSSINGS 11

6.0 CROSSING OF BURIED SERVICES 13

Copyright VCS Quality Services Private Limited – All rights reserved

1.0 SCOPE

This specification covers the minimum requirements for the various activities to be carried out by the Contractor for or about installation of pipelines crossing roads, railroads, minor water courses and other services.

The provision of this specification are not applicable for pipelines crossing water courses, which are specifically designated as "Major water Courses" in the CONTRACT.

This provision are formulated to protect the facilities crossed by the pipeline as well as to provide adequate design for installation and operation of pipeline.

Requirements related to installation of pipeline crossing including, but not limited to site preparation, supply of materials, string fabrication, joint coating application, boring / jacking, testing, tie-in, clean-up, restoration and as-built drawing are addressed in this specification.

2.0 REFERENCE CODES, STANDARDS AND SPECIFICATIONS

Reference has been made in this specification to the latest edition (edition in force at the time of floating the enquiry) of the following codes, standards and specifications.

AMERICAN SOCIETY OF MECHANICAL ENGINEERS (ASME)

B31.4	:	Pipeline Transportation system for liquid Hydrocarbon & other liquids.
B31.8	:	Gas Transmission and Distribution Piping Systems.

AMERICAN PETROLEUM INSTITUTE (API)

API RP 1102	:	Recommended practice for liquid Petroleum Pipeline Crossing Railroads and Highway

PNGRB REGULATIONS :

G.S.R 808(E) T4S	: Regulations for Natural Gas Pipelines
G.S.R. Infra/ T4S/ P&PPPL	: Regulations for Petroleum and Petroleum products pipelines
G.S.R. 612(E) T4S	: Regulations for CGD Network

SPECIFICATIONS

VPC-SS-PP-2001	:	Standards Specification for pipeline construction (onshore)
VPC-SS-PP-2014	:	Specification for Hydrostatic Testing of Onshore Pipeline.

Copyright VCS Quality Services Private Limited – All rights reserved

2.1 In case of conflict between the requirements of above mentioned codes, standards, regulations, specifications and practices, the most stringent requirement shall govern. For the purpose of this specification the following definitions shall hold:

- Words 'Shall' and 'Must' where used indicate that a provision is mandatory.
- Words 'Should' and `Will' where used indicate that a provision is not mandatory but is recommended as good practice.

3.0 GENERAL

3.1 Crossing of roads, railroads, buried services, canals and minor water courses with equipment and/ or personnel is allowed only after acquiring approval from the authorities having jurisdiction and after making arrangements for safeguarding the roads, etc. and the verges and/ or banks thereof and the buried services with appropriate provisions.

The carrier pipe shall be firmly supported on both sides of the crossing. The bottom of trench and pit for at least 12 m length at approaches to crossing shall be graded and filled with soil compacted up to 95% Proctor density to an elevation that will provide sufficient continuous support to the carrier pipe. Earth or sand filled bags may be used to firmly support the carrier pipe adjacent to the crossing. In case of cased crossing, carrier pipe shall be supported in such a manner that it remains correctly aligned at the casing ends during and after backfilling.

Highways, Main-Roads and Railroads and their verges and banks of water crossings are not allowed to be used for loading, unloading or stacking of materials and/ or equipment. For secondary roads, such loading/ unloading is permitted only after prior approval from the concerned authorities. Contractor is not allowed to close or divert roads or watercourses without prior approval from the company and the concerned authorities. Contractor shall never unnecessarily hamper the users of the roads, railroads, buried services and/ or watercourses. The water flow shall not be obstructed in any way.

3.2 Contractor shall submit the followings before start of any crossing works:

- Approval letter from concerned authorities
- Time Schedule
- Execution methodology with details of equipment
- Test procedure
- Manpower deployment
- Description of temporary works
- Design calculations for crossing (if any)
- Soil investigations etc.
- Construction drawings

Such works shall be without any extra cost to company.

3.3 SURVEYS AND INVESTIGATIONS

The Company may carry out surveys and soil investigations along pipeline route including crossing locations. The details of the surveys, soil investigations and other data collected

Copyright VCS Quality Services Private Limited – All rights reserved

by the Company shall be presented in the drawings and documents enclosed with the Contract for the information of the Contractor.

The Contractor shall be deemed to have reviewed and satisfied himself with regard to the details provided in the Contract. It shall be the responsibility of the Contractor to assess requirement of any additional surveys and/ or soil investigations or any other data collection that may be deemed necessary for proper execution of the works in accordance with the drawings, specifications, other requirements of the Contract including requirements of concerned Authorities.

The Contractor shall be responsible for carrying out survey, soil investigation and data collection, as deemed necessary by the Contractor, for proper execution of the works. The Company shall not provide any additional details in this regard.

Whenever specified in the contract, contractor shall carryout all geotechnical investigation and Hydrological, scour calculate in case of water

3.4 PROTECTION OF UNDERGROUND UTILITIES

Contractor shall ensure that the crossing is not interfering with any of the existing underground utilities. Should any damage to any utility/ structure occur, the Owner/ Authority concerned shall be contacted by the Contractor and repair shall be carried out by the Contractor to entire satisfaction of the Owner/ Authority. All costs for reinstatement or incidental to reinstatement shall be settled and paid by the Contractor.

3.5 MINIMUM COVER REQUIREMENT

Within the limits of bored crossings, unless noted otherwise on the Contract drawings, minimum requirements of cover indicated in Table-1 shall be satisfied.

Table 1 – Minimum Cover Requirements for Crossings

Utility Crossed	Minimum Cover
National Highways and Expressways	1.2 m from top of road to top of pipe
State Highways	1.2 m from top of road to top of pipe
Railroads	1.7 m from base of rail to top of pipe
Canal (Lined / Unlined)	1.5 m below the canal bed level
River	2.5 m (below scour depth/ Lowest bed level)
	1.5 m in case of rocky strata

In case any additional cover over and above the above minimum cover is stipulated by the Authorities, the Contractor shall ensure compliance with the requirements of the Authorities.

3.6 HYDROSTATIC TESTING

Pipeline crossings for road, railroad, canals and rivers etc., shall be hydrostatically pretested ex situ, prior to joint coating, whenever,

- Crossing is executed by boring of carrier pipe
- Casing pipe used in crossing installation

Copyright VCS Quality Services Private Limited – All rights reserved

- River Crossing pipes which are to be continuously concrete weight coated (to be tested prior to concrete coating).
- Whenever, in company's opinion, the repair of pipeline at crossing, in case of a leak during final hydrostatic testing, would require inordinate amount of efforts and/ or time
- Whenever pretesting is insisted upon by the Authorities having jurisdiction over the utility crossed.

The pipeline shall be hydrostatically tested to a minimum test pressure equal to 1.25 / 1.5 times the design pressure as applicable. The combined equivalent stress in the pipeline due to bending and test pressure shall not exceed 95% of the SMYS of pipe material. Test pressure shall be retained in the pipeline for minimum period of 2 hours. Test section shall be visually examined for leaks/ defects, etc.

4.0 ROAD AND RAILROAD CROSSINGS

4.1 The work under crossings shall include necessary clearing, grading and trenching to required depths and widths, welding of casing and carrier pipes, lowering-in, back filling, clean-up, restoration to the original condition and further strengthening and protective works, testing, installation of assemblies, insulators and seals, and temporary works such as sheet piling, bridges etc.

The work shall be carried out in accordance with the approved drawings and job standards, as directed by Company and to the satisfaction of Company and the authorities having jurisdiction over the facility crossed. The work carried out for road and railroad crossings shall meet the minimum requirements of API RP 1102.

Prior approval from the statutory authorities shall be obtained to lay the pipeline across the highway/ road either by boring or by open-cut- method. Installation of the crossing shall be by the method (i.e. boring/ open-cut) approved by Authorities having jurisdiction. Railroad crossings shall always be bored/ .

Before the installation work of crossings is started, the Contractor shall provide suitable barricades, temporary bridge/ bypass work (especially where roads are open cut) with railing, if required by Company for safety of traffic. Adequate traffic warning signals and/ or traffic lights and suitable diversions shall be provided as directed by Company/ Authority having jurisdiction over these areas. Such diversions shall not cross the pipeline where it has already been installed, unless proper safeguarding at Company opinion is ensured.

4.2 Boring/ jacking of carrier pipes for crossings is allowed only if the pipes for boring/ jacking are provided with a suitable corrosion coating and Contractor remains liable for the suitability of the pipe and weld coating of carrier pipes to be bored and type of coating and method of application are anyhow to be authorized by Company without prejudice to Contractor's liability. In all other cases the carrier pipes shall be cased.

Before start of the boring/ jacking, Contractor shall execute a soil investigation and determine the ground water table. Based on these investigations Contractor shall prepare

a construction drawing and submit to Company for approval including time schedule and soil investigation report.

Copyright VCS Quality Services Private Limited – All rights reserved

During the execution of the boring, the ground water table over the length of the boring shall be lowered up to at least 0.50 M below bottom of the pipeline. This water table is to be regularly inspected and maintained by Contractor and reported to Company to safeguard the stability of the bore pit. Contractor shall, if necessary in Company opinion, use a closed sheet piling, which shall extend at least over 50% of the length in undisturbed soil. The length of the boring shall be in accordance with the width of the ROU of the crossing (road, railroad, etc.) with minimum 0.6 M extra on either side.

In approaches to the crossing, Contractor shall eliminate unnecessary bending of pipe by conforming to the contour of the ground by gradually deepening the ditch at such approaches as directed by the Company.

4.3 The diameter of the hole for a bored section shall have a hole diameter as close as practicable to the outside diameter of the carrier or casing pipe. If excessive void or too large hole results, or if it is necessary, in the opinion of Company, to abandon the bored hole, prompt remedial measures such as filling the hole with suitable material shall be taken to the entire satisfaction of the Company and Authorities having jurisdiction thereof at no extra cost to Company. Equipment used for installation of casing pipe shall be of the type approved by Company.

An installation consisting of hydraulic jacks shall be provided with easily readable pressure gauge (in bar) and sealable pressure limits. Their proper operation shall be demonstrated before the work is started. Company can request that the maximum pressing force be limited.

At the front of the pipe there may be a cutting ring which may be 12 MM larger than the outside diameter of the pipe or casing. A lubricating pipe can also be used in jacking, the nipples of which shall not protrude from the cutting ring. Said lubricating pipe shall not be fixed to the pipe or casing. When jacking, only biologically degradable lubricants shall be used.

The progress in the work, the readings of the gauge pipes, the jacking pressures observed, etc., shall be recorded in a log book, to be shown to Company upon request. All information shall be supplied to Company on completion of the work.

In case of jacking failure e.g. resulting in pipe buckling or the equipment being unable to push the pipe further, the pipe shall be left in the hole, filled with sand and plugged at both ends. Cost of pipe lost due to such failure shall be borne by the Contractor.

Company reserves the right to inspect certain lengths of pipes to assess damages, if any, to the corrosion coating of the carrier pipe used for boring. Contractor shall weld additional lengths of pipe and pull the required extra lengths for Company's inspection. If during inspection any defects are noticed, Contractor, in consultation with Company, shall carry out the remedial measures required.

4.4 After completion of the pipe laying, the trench shall be properly compacted by mechanical compactors to the satisfaction of the Authorities and restored back to the original.

While welding of the casing and vent/ drain pipes, internal high or low is not allowed. Welding of casing and vent/ drain pipes need not be radiographed, however, only normal

Copyright VCS Quality Services Private Limited – All rights reserved

visual checks shall be carried out. Before welding, the single length of pipe shall be inspected in order to check that there is no out of roundness and dents. When such defects are noticed, these must be completely removed before joining the pipes. If these defects cannot be repaired, the defective section shall be cut out.

4.5 In the case of crossings where excavation has been authorized, the welding for the casing pipe and for a continuous section of the pipeline corresponding to the expected length shall be carried out in the proximity of the crossing. Casing must be laid immediately after the trenching. Casing pipe must be laid with a single gradient in order to allow for an easy insertion.

4.6 The assembly of vent pipe units as approved by Company shall be carried out by direct insertion and welding to the ends of the casing pipe before introducing the carrier pipe to avoid damage to insulators from welding heat. The operation of assembling and extending the vent pipe shall be carried out in such a way that there is no contact with the carrier pipe. The painting/ coating of the vent pipes shall be applied before backfilling as per relevant specifications.

4.7 Before installation of carrier pipe, the casing pipe shall be thoroughly cleaned to remove soil, mud, stones and other foreign material. A nose-piece having a diameter equal to that of the pipe shall be welded to the front end of the carrier pipe to facilitate correct installation of the carrier pipe in the casing. Pushing or pulling force is evenly and constantly applied to avoid damage to the insulators.

4.8 Insulators, as per specification as approved by Company, shall be securely fastened to the pipe with all bolts and fixtures firmly tightened. The number of insulators and spacing shall-be as shown in Standard drawing No VCS-STD-2009 or 2.5 meters center (whichever is more stringent). At the end of both sides of the casing, a double set of insulators shall be installed.

4.9 Care must be taken in pushing or pulling carrier pipe into the casing so that the pipe is aligned correctly in the casing and that the pushing or pulling force is evenly and constantly applied to avoid damages to the insulators. A nose piece having a diameter equal to that of the pipe shall be welded on the front and back end of the carrier pipe to facilitate installation of the carrier pipe properly in the casing and to keep it dry and clean.

4.10 In the event of failure, the pipe/ section removed from the installed pipeline shall be kept aside and preserved for further investigation of the reasons for failure.

After successful testing the ends of the pipeline section shall be capped and buried unless immediate tie-in is carried out. The location of the ends shall be marked on ground by installing markers.

4.11 After installation of the carrier pipe section, the casing and the appurtenances, but prior to making tie-in welds and backfilling, an electrical test shall be conducted by the Contractor in the presence of the Company, to determine the resistance between the casing and the carrier pipe or the carrier pipe and the soil. These tests shall show at least a resistance of 100,000 ohm M^2. After backfilling and compaction, additional tests shall be conducted to determine if the casing is electrically shorted to the pipe. If the installation is found to be shorted, Contractor shall make the necessary corrections and repairs at his cost, unless a test to the satisfaction of the Company is obtained.

Copyright VCS Quality Services Private Limited – All rights reserved

In case of failure of test, the Contractor shall assess the reasons for lower resistance and if it is established that casing and carrier pipe are electrically short circuited, the Contractor shall make the necessary repairs and verify that short circuiting has been successfully removed.

5.0 MINOR WATER COURSE CROSSINGS

5.1 Minor water crossings are crossings of (future) ditches, canals, water courses, rivers, streams etc. whether the bed(s) contain(s) water or not, and not being specified as "Major Water Crossings" in the CONTRACT.

5.2 For minor water crossings a standard drawing or a separate detailed approved drawing for individual crossing shall be applicable, and all further specifications are applicable.

5.3 Whenever minor water crossings in the ROU are to be crossed, Contractor shall install bridges and further comply with the provisions as laid down in this specification.

5.4 In crossings of water courses with either moderate flow rate or of torrential nature with marked and unpredictable flooding, an adequate survey shall be carried out before starting the work with the object of determining what precautions are necessary and the most favorable period for executing the work.

5.5 In case of crossings of water courses for which no special methods of laying are required, a pipe section of a size as per the approved drawings shall be assembled and subsequently laid. Bends shall be of cold field type.

The depth of the existing bottom of a minor water course crossing shall be determined in relation to the adjacent ground level by taking the average of four measurements. Measurements shall be taken with a gauge rod having a flat bottom. The minimum force to be exerted shall be 360N (36kgf).

Contractor shall take special care to check with the responsible authorities for special conditions applying to working on, over, under or thorough minor water crossings and Contractor shall comply with any such conditions. Written arrangements with authorities shall be drawn up in cooperation with Company.

5.6 Whenever required by Company, Contractor shall, before start of construction, execute a geo-technical and hydrological investigation. Based on these investigations Contractor shall also calculate scour level and prepare construction drawings, Contractor shall submit all reports, calculations and drawings for approval by Company.

5.7 The minimum cover over the pipe shall be as specified in the relevant approved drawings and job standard.

5.8 For crossing beneath the bed of water courses, the pipe section shall be made in such a way that it conforms to the existing or future bed as indicated in the approved drawings. In crossings for which an individual drawing has not been prepared, the minimum cover of the pipeline shall not be less than that indicated in- the standard drawings for a similar type. of crossing.

5.9 Whenever the crossing requires a straight section of pipe between the lower bends coinciding with the river bed, this section shall be laid at a single horizontal level.

Copyright VCS Quality Services Private Limited – All rights reserved

5.10 For crossing of ditches, canals, banked channels, etc. by boring, the pipe section shall be prepared, laid and tested in accordance with the applicable clauses of Section 4.0 of this specification.

5.11 The Contractor shall arrange temporary installation of diversions as may be necessary, to ensure the effective functioning of these watercourses crossed, to the entire satisfaction of the concerned local Authorities as well as the Company.

5.12 Banks and trenches of minor water crossings shall be backfilled with soil which is to be approved by Company and shall be thoroughly compacted to prevent soil and bank erosion as per the drawings and standards to the satisfaction of authorities having jurisdiction thereof and the Company. Whenever boulders, rock, gravel and other hard objects are encountered, they shall not be placed directly on the pipe. Sufficient earth, sand or selected and approved backfill material shall be backfilled initially around and over the pipe to provide a protective padding or cushion extending to a minimum thickness of 30 centimeters around the pipe before backfilling remainder of the trench with excavated or other material as per approved drawings and standards.

After the trench has been backfilled and during the clean up works, the minor water crossing shall be cleaned at least across the whole width of the ROU.

When specified in the CONTRACT, Contractor shall repair the ditch bank with materials to be supplied by himself as follows:

The excavation shall be backfilled with well compacted solid soil, followed by a minimum 0.25 M thick layer of properly shaped boulders (75-150 MM) encased in a net of galvanized iron wire of dia 3 MM spaced at a maximum distance of 50 MM to be laid over the backfilled, compacted and graded banks.

The width of the above protection shall be equal to the bank excavated and damage and extending 3 M on either side. The length of this protection on the slope shall be determined by the following:

- 2 M plus the highest water level.
- Up to the bottom of the crossing or 20 M below the highest water level whichever is smaller.

5.13 After completion of crossing, any temporary arrangements made for diversion flowing water shall be restored back to the original.

Where possible a gradual slope to the pipe shall be given on both sides to avoid use of sag bend at the crossing. Otherwise, single pipe sag bend suitable for each nala / stream shall be prepared by field cold bending and installed at the crossing.

5.14 The crossing of any embankments shall be carried out strictly in accordance with approved drawings.

No drilling work on embankments shall be permitted without prior written approval from the competent Authorities.

Copyright VCS Quality Services Private Limited – All rights reserved

6.0 CROSSING OF BURIED SERVICES

6.1 The pipeline under construction may pass above or below the existing buried facilities such as pipelines, cables, etc. Type of crossing shall be such that a minimum depth of cover as required in the drawings and specifications are guaranteed. The minimum clearance required between pipeline and the existing facility shall be 500 MM as per job standard.

6.2 Whenever buried services in the ROU are to be crossed by Contractor, Contractor shall safeguard the buried facilities and the required protecting precaution shall be executed as approved by Company of the buried services and by Company.

Copyright VCS Quality Services Private Limited – All rights reserved

ENERGISING QUALITY

VCS QUALITY SERVICES PVT. LTD.

SPECIFICATION
FOR
3 LAYER POLYETHYLENE
COATING OF LINEPIPES

VPC-SS-PP-2003

03	24.01.2022	AS	MC	HK	HK
Rev. No	Date	Prepared By	Checked By	Approved By	Authorized By

UNCONTROLLED COPY	:	If printed
CONTROLLED COPY	:	If in soft and signed

Copyright VCS Quality Services Pvt Ltd. – All rights reserved

REVISION RECORD						
Rev.	**Revision Date**	**Prepared by**	**Checked by**	**Approved by**	**Authorized by**	**Revision Description**
00	23.06.2017					Issued as Standard Specification
		AS	SM	AD	SK	
01	24.09.2019					Re-Issued as Standard Specification
		JV	MC	AD	SK	
02	28.01.2020					Document formatting, numbering updated from SS-PL-002 to VPC-PP-SS-2003 other detail update as marked
		MB	MC	AD	SK	
03	24.01.2022					VCS QMS Integration.
		AS	MC	HK	GW	

Copyright VCS Quality Services Pvt Ltd. – All

ABBREVIATION

APS	Application Procedure Specification
ASTM	American Society for Testing and Materials
CD	Cathodic Disbondment
DIN	Deutsches Institut für Normung
DSC	Differential Scanning Calorimetry
ESCR	Environmental Stress Cracking Resistance
FBE	Fusion Bonded Epoxy
ISO	The International Organization for Standardization
HDPE	High-Density Polyethylene
PQT	Procedure Qualification Trial (Test)
QAP	Quality Assurance Plan
ITP	Inspection and Testing Plan
OWNER	Company (companies) that own(s) and /or operate(s) pipeline(s).
APPLICATOR	Company that undertakes the coating application in accordance with the provisions of this document.
CONTRACTOR	A party contractually appointed by the Owner to fulfill all, or any of the activities associated with design, construction and operation.
CONSULTANT	Professionals, who provide technical support, perform trouble-shooting functions and customer issues.
MANUFACTURER	Company responsible for the manufacture of coating materials, chemicals and consumables.
SSPC	The Society for Protective Coatings

Copyright VCS Quality Services Pvt Ltd. – All

CONTENTS

1.0 SCOPE 5

2.0 REFERENCE DOCUMENT 5

3.0 PLANT SCALE AND INSTALLATION: 8

4.0 COATING MATERIALS: 9

5.0 FUNCTIONAL REQUIREMENTS AND PROPERTIES OF COATING: 11

6.0 COATING DOCUMENTATION TO BE SUBMITTED: 16

7.0 APPICATION OF COATING: 18

8.0 COATING PROCEDURE QUALIFICATION: 27

9.0 RE-QUALIFICATION OF PROCEDURE QUALIFICATION: 38

10.0 COATING PROCEDURE TESTS DURING PRODUCTION: 38

11.0 QUALITY ASSURANCE: 46

12.0 HANDLING, STORAGE AND TRANSPORTATION OF BARE & COATED PIPES: 47

13.0 REPAIR OF COATING: 49

14.0 MARKING: 51

15.0 INSPECTION, MEASURING AND TEST EQUIPMENT: 51

16.0 RELEASE OF FINISHED COATED PIPES: 52

ANNEXURE-I 53

LIST OF ACCEPTABLE COMBINATIONS OF COATING MATERIALS 53

Copyright VCS Quality Services Pvt Ltd. – All

1.0 SCOPE

1.1 This specification covers the minimum requirements for supply/arrangement of all materials, plant, equipment, plant sites, consumables, utilities and application including all labour, supervision, inspection and tests, transportation, handling, coating integrity etc. for application of external anti-corrosion coating of pipes by using 3 Layer Side Extruded Polyethylene coating conforming to ISO 21809- 'Petroleum and Natural Gas Industries-External Coatings for buried and submerged pipeline transportation systems-Part 1:Polyolefin Coatings', and the requirements of this specification.

In case, Applicator/ Contractor feels more stringent testing shall be followed to meet all testing requirements of this specification, then Applicator / Contractor is free to do such stringent testing including equipment calibration etc.

The three-layer coating as per this specification shall belong to coating Class B of ISO 21809- 1: 2018 and shall be suitable for design temperature range of (-) 40 °C to (+) 80 °C.

External 3LPE coating of line pipe consists of:

a) 1st Layer: Electrostatically sprayed primed layer of epoxy powder;

b) 2nd Layer: Application of grafted co-polymer adhesive by side extrusion process

c) 3rd Layer: Application of medium / high density polyethylene by side extrusion process in order to obtain plant-applied, integrated, anti-corrosion 3LPE coating.

All the above coating layers are applied with specified individual thickness, conforming the requirements relevant applicable codes, specifications & standards and also meeting the expected design life for intended uses.

2.0 REFERENCE DOCUMENT

Reference has also been made to the latest edition (edition enforce at the time of issue of enquiry) of the following standards, codes and specifications. The edition enforces at the time of floating the enquiry shall be termed as latest edition.

ISO 21809-1 :2018	Petroleum and Natural Gas Industries-External Coatings for buried and submerged pipelines used in pipeline transportation systems – Part 1: Polyolefin coatings (3-layer PE and 3-layer PP).
ISO 21809-2 :2014	Petroleum and Natural Gas Industries-External Coatings for buried and submerged pipelines used in pipeline transportation systems – Part 2: Single Fusion-bonded Epoxy Coatings.

Copyright VCS Quality Services Pvt Ltd. – All

ASTM D149	Standard Test Method for Dielectric Breakdown Voltage and Dielectric Strength of Solid Electrical Insulating Materials at Commercial Frequencies.
ASTM D257	Standard Test Methods for DC Resistance or Conductance of Insulating Materials.
ASTM D792	Standard Test Method for Density and Specific Gravity (Relative Density) of Plastics by Displacement.
ASTM D1238	Test Method for Melt Flow Rates of Thermoplastics by Extrusion Plastometer.
ASTM D1603	Standard Test Method for Carbon Black Content in Olefin Plastics.
ASTM D1693	Standard Test Method for Environmental Stress-Cracking of Ethylene Plastics.
ASTM D4940	Standard Test Method Conductometric Analysis of Water-Soluble Ionic Contamination of Blast Cleaning Abrasives.
API RP 5L1	Recommended Practice for Railroad Transportation of Line pipe
API RP 5LW	Recommended Practice for Transportation of Line pipe on Barges and Marine Vessels.
API RP 5LT	Recommended Practice for Truck Transportation of Line Pipe
DIN EN 30670:2012	Polyethylene Coating on Steel Pipes and Fittings-Requirements and Testing.
BS EN 10204	Metallic Products – Types of Inspection Documents
ISO 306	Plastics-Thermoplastic materials- Determination of Vicat softening temperature (VST)
ISO 527-2	Plastics - Determination of tensile properties - Part 2: Test conditions for moulding and extrusion plastics.
ISO 527-3	Plastics - Determination of tensile properties - Part 3: Test conditions for films and sheets
ISO 868	Plastics and ebonite - Determination of indentation hardness by means of a durometer (Shore hardness)

Copyright VCS Quality Services Pvt Ltd. – All

ISO 1133-1	Plastics – Determination of the melt mass- flow rate (MFR) and melt volume –flow rate (MVR) of thermoplastics-Part 1: Standard method.
ISO 1183	Plastics – Methods for determining the density of non-cellular plastics.
ISO 2808	Paints and varnishes - Determination of film thickness
ISO 8501-1	Preparation of Steel Substrates before Application of Paints and Related Products – Visual Assessment of Surface Cleanliness – Part 1: Rust grades and preparation grades of uncoated and steel substrates and of steel substrates after overall removal of previous coatings.
ISO 8502-3	Preparation of Steel Substrates before Application of Paints and Related Products – Tests for assessment of Surface Cleanliness – Part 3 – Assessment of Dust on Steel Surfaces Prepared for Painting (Pressure-Sensitive Tape method).
ISO 8503-4	Preparation of Steel Substrates before Application of Paints and Related Products – Surface roughness characteristics of blast-cleaned steel substrate - Part 4: Method for the calibration of ISO surface profile comparators and for the determination of surface profile – Stylus instrument procedure.
ISO / TS 9002	Quality Management Systems: Guidelines for the application of ISO 9001.
ISO 11124 (all parts)	Preparation of Steel Substrates Before Application of Paints and Related Products – Specification for metallic blast-cleaning abrasives.
ISO 11357-6	Plastics - Differential scanning calorimetry (DSC) - Part 6: Determination of oxidation induction time (isothermal OIT) and oxidation induction temperature (dynamic OIT).
ISO 15512	Plastics - Determination of water content
SSPC AB3	Ferrous metallic abrasives.
SSPC- SP1	Solvent cleaning
SSPC Guide15	Field Methods for Extraction and Analysis of Soluble Salts on Steel and Other Nonporous Substrates

Copyright VCS Quality Services Pvt Ltd. – All

API 5L	Specification for Line Pipe
ASME B31.4	Pipeline Transportation Systems for Liquids and Slurries
ASME B31.8	Gas Transmission and Distribution Piping Systems.
AWWA Spec	Standard Methods for the Examination of Water and Wastewater

The Applicator/ Contractor shall be familiar with the requirements of these documents and shall make them readily available at the coating plant to all persons concerned with carrying out the works specified in this specification.

3.0 PLANT SCALE AND INSTALLATION:

3.1 Applicator/ Contractor shall size coating plant(s) after evaluating the scale of work and the time schedule required for the works. Coating plant(s), both new and existing, shall be installed into a yard whose geometry and dimensions are such as to allow the execution of a continuous work schedule. For this purpose, the Applicator/ Contractor shall ensure non-stop work execution owing to prohibitive adverse weather conditions and install requisite equipment and plant in roofed and adequately weather-protected areas.

3.2 Plant equipment, machinery for abrasive blasting, induction heating, chemical pre-treatment, spray of FBE powder, extrusion of adhesive and polyethylene, quenching, cut back preparation and other facilities shall be in first class operating condition to at least meet the job requirements of quality and production. Worn out and improvised plants are not acceptable. The Contractor has to select the Applicator from the Vendor list specified elsewhere in the Tender document.

3.3 The epoxy booth shall be sized to accommodate number of spray guns (virgin & re-cycled) required for application of required quantity of fusion bond epoxy powder to be electrostatically sprayed on to the pipe to achieve required thickness as specified.

3.4 Plant shall have fusion bond epoxy powder storage room with power back up for air conditioning or de-humidifier equipment capable of storing epoxy powder as per temperature & humidity conditions as per manufacturer's recommendation. Conveying of epoxy powder from storage room to fluidized bed shall be thru a suitably designed conveying system. Manual powder feeding shall not be permitted. Proper sieving system shall be available for both virgin and re-cycled powder. System for ratio control of virgin & re-cycled powder should be available.

3.5 HDPE & Adhesive granules shall be separately stored in identified shed area, protected from direct sunlight, heat and water as per manufacturer's recommendations.

3.6 The air used for fluidization of epoxy powder shall be free from f. For this purpose, dehumidifiers and / or air dryer as necessary shall be provided along with necessary

Copyright VCS Quality Services Pvt Ltd. – All

monitoring and control systems. Fluidized bed shall have magnets adequate to remove iron and steel shaving contaminant from recycled powder.

3.7 The conductivity of DI (De-Ionized) water (if used) shall be less than 5 micro-siemens/cm and rinse water pressure shall be minimum 1500 psi.

3.8 The Applicator/ Contractor shall, at his own responsibility and cost, provide and prepare all necessary area for the storage of bare and coated pipe and all other materials, for coating yard, stock-piling and other temporary installation. For each area, Applicator/ Contractor shall provide necessary agreements as required with the land owner(s)/relevant Authorities, and, on work completion, to clean and pay settlement and claims for damages, as applicable.

3.9 The Applicator/ Contractor shall at its own responsibility and cost, provide for water and power supply and other utilities and consumables and obtain authorization regarding access roads and other permits required for the execution of works conforming to all the requirements of the governing Authorities.

3.10 The Applicator/ Contractor shall at its own expense provide a fully equipped laboratory and test facilities with adequate inventory to carry out tests required for the procedure qualification and regular production. Material manufacturer shall conduct the tests for each grade of material in Approved external independent laboratory (preferably ISO 17025 certified or equivalent having good track records of pipe coating testing) and provide complete test report (not older than 3 years) prior conducting Procedure Qualification Trail (PQT).

3.11 The Applicator/ Contractor shall be fully responsible for adherence to all statutory regulations applicable for handling, storage and disposal of the hazardous chemicals during the coating works.

3.12 The Applicator/ Contractor shall be responsible for obtaining all statutory approvals/clearances from relevant Authorities including Pollution Control Board, as applicable for the coating plant(s).

4.0 COATING MATERIALS:

4.1 The three-layer coating system shall comprise of a fusion bond epoxy layer, co-polymeric or grafted adhesive and high-density polyethylene (HDPE) topcoat. Coating materials shall be suitable for the service conditions and the pipe sizes involved. The coating materials i.e., epoxy powder (FBE), adhesive and polyethylene compound shall have proven compatibility. The coating system and materials shall be pre-qualified and approved by Owner/ Consultant in accordance with provisions of Annexure I of this specification. Applicator / Contractor shall obtain prior approval from Owner for the coating system and coating materials.

4.2 The coating material manufacturers shall carry out tests for all properties specified in clause 5.4.1, 5.4.2 & 5.4.3 and Table 2, 3 & 4 respectively for each batch of epoxy, adhesive and polyethylene compound. The coating materials manufacturer shall issue test certificates as per BS EN 10204, 3.1 for each batch of materials supplied to Applicator/ Contractor indicating all contents/ parameters required for batch

Copyright VCS Quality Services Pvt Ltd. – All

certification as per clause 9.3, Table 6 of ISO 21809-1:2018 and the same shall be submitted to Owner for approval prior to their use.

4.3 In addition to Manufacturer's certificate, the Applicator/ Contractor shall draw two samples per batch of epoxy, adhesive and polyethylene in the presence of Owner Representative and test for the following properties at the coating laboratory prior to its use in order to establish compliance with the manufacturer's test certificates.

4.3.1 **Epoxy Powder:**

- Density
- Gel Time
- Particle size
- Moisture content
- Thermal characteristics (Tg1, Tg2 & ΔH)

4.3.2 **Adhesive:**

- Density
- Melt Flow Rate
- Vicat Softening Temperature
- Water Content

4.3.3 **Polyethylene:**

- Melt Flow Rate
- Density
- Vicat Softening Temperature
- Water Content
- Oxidation Induction Time

In case of failure of any of the above tests in any batch, that batch of material shall be tested for all other tests required as per clause 5.4.1, 5.4.2 & 5.4.3 and Table 2, 3 & 4 respectively, including the tests which failed. If all tests pass, the batch shall be

Copyright VCS Quality Services Pvt Ltd. – All

accepted for coating. If any of the tests fail, entire batch of material shall be rejected and shall not be used for the coating.

4.4 All materials to be used shall be supplied in sealed, damage free containers and shall be suitably marked with the following minimum information:

- Name of the Manufacturer
- Grade or Trade name
- Health, safety and environmental Instructions
- Type of Material
- Batch Number
- Place of Manufacture
- Manufacturing Date / Shelf Life/Expiry Date (if applicable)
- Quantity

All materials noted to be without above identification shall be deemed suspect and shall be rejected by Owner. Such materials shall not be used for coating and shall be removed from plant/ factory and replaced by Applicator/ Contractor at his expense.

4.5 Applicator/ Contractor shall ensure that all coating materials are properly stored in accordance with the Manufacturer's recommendation at all times, to prevent damage and deterioration in quality prior to use. Documentary evidence for the same shall be provided for verification by Owner/ Consultant.

4.6 Applicator/ Contractor shall be required to use all materials on a date received rotation basis, i.e., first in - first used basis.

5.0 FUNCTIONAL REQUIREMENTS AND PROPERTIES OF COATING:

5.1 The coating shall be able to withstand a maximum in service operating temperature up to +80°C and shall conform to "Class B" as per ISO 21809-1:2018.

5.2 The topcoat polyethylene used shall be a black readymade compound, fully stabilized against influence of ultraviolet radiation (i.e., sunlight), oxygen in air and heat (due to environmental temperature up to +80°C). No appreciable changes shall occur during exposure to such environments up to at least a period of 8500 hours. The Applicator / Contractor shall submit certificate from Manufacturer in this regard.

5.3 Thickness of the Coating System:

Minimum thickness of each layer and total thickness of finished 3LPE coating system shall be as under:

Table 1: Minimum Thickness of Coating System

Pipe size (OD)	Thickness of Epoxy Layer (mm)	Thickness of Adhesive Layer mm	Thickness of HDPE Layer mm	Total Thickness of 3LPE coating mm

Copyright VCS Quality Services Pvt Ltd. – All

4.5" to 10.75"	0.2	0.2	2.3	2.7
12.75" to 20"	0.2	0.2	2.7	3.1

For SAW pipes, 10% reduction on total thickness of applied coating measured on the apex of the weld seam shall be acceptable.

5.4 Properties

Properties of coating material and coating system shall comply with the requirements indicated in subsequent paragraphs. Applicator/ Contractor shall choose brand of epoxy powder, adhesive & HDPE as per approved vendor list (refer Annexure I) that shall achieve the functional requirements and properties of coating system as specified in clause no. 5.1, 5.2 and 5.4 of this specification respectively.

The acceptable combinations of coating material shall be as per Annexure-I.

5.4.1 Properties of Epoxy Powder (FBE):

Table 2 – Epoxy (FBE) Properties:

Sl. No.	Properties	Unit	Requirements	Test Method
1	Density	g/cm3	Within ± 0.05 of the manufacturer's specified nominal value	ISO 21809-1 Annex M
2	Gel Time at 205°C ± 3°C	s	Within 20% of the nominal value specified by the manufacturer	ISO 21809-1 Annex J
3	Particle Size	%	3.0% retained on 150µm sieve ≤0.2% retained on 250µm sieve and within manufacturer's specification	ISO 21809-2
4	Moisture Content	% mass	≤ 0.6	ISO 21809-1 Annex K
5	Thermal Characteristics (Tg1, Tg2, ΔH) Minimum Glass Transition Temperature (Tg2)	°C	Within manufacture's Specification. ≥ 95 and within manufacturer's specification	ISO 21809-1 Annex D

The colour of epoxy powder shall be either green or dark red or any other colour approved by Owner except grey colour.

5.4.2 Co-polymeric or Grafted Adhesive:

Table 3 – Co-polymeric or Grafted Adhesive Material Properties:

Sl. No.	Properties	Unit	Requirements	Test Method

Copyright VCS Quality Services Pvt Ltd. – All

1	Density	kg/m3	≥930 and within manufacturer's specification	ISO 1183
2	Melt Flow Rate (MFR)	g/10 min	≥1.0 and within manufacturer's specification	ISO 1133-1
3	Water Content	%	≤0.05	ISO 15512
4	Strain at Break at 23°C ± 3°C	%	≥600	ISO 527-2
5	Stress at yield 23°C ± 3°C	MPa	≥8	ISO 527-2
6	Vicat Softening Temperature (A/50, 9.8 N)	°C	≥100	ISO 306

5.4.3 Properties of Polyethylene (HDPE) Compound:

Table 4 - HDPE (Top coat) Material Properties:

Sl. No.	Properties	Unit	Requirements	Test Method
1	Density of black compound	g/cm3	≥0.940	ISO 1183
2	Melt flow rate (MFR)	g/10 minutes	≥0.25 and within manufacturer's specification	ISO 1133-1
3	Water Content	%	≤0.05	ISO 15512
4	Carbon Black Content	%	2-3	ISO 6964
5	Carbon Black Dispersion		Max Grade 3	ISO 18553
6	Hardness	Shore D	≥55	ISO 868
7	Strain at break at 23°C ± 3°C	%	≥600	ISO 527-2
8	Stress at Yield at 23°C ± 3°C	MPa	≥17	ISO 527-2
9	Vicat Softening Temperature (A/50, 9.8 N)	°C	≥110	ISO 306
10	Environmental Stress Cracking Resistance (ESCR) (50°C, F50)	h	≥ 1000 Cond.B, 10% Igepal CO630 or If density of black compound >0.955 g/cm3 ≥ 300 Cond.B, 100% Igepal CO630	ASTM D 1693
11	Oxidation Induction Time (Intercept in the tangent method)	min	≥30 at 2100C	ISO 11357-6

Copyright VCS Quality Services Pvt Ltd. – All

12	UV Resistance and Thermal Ageing	%	Δ MFR ≤35	ISO 21809-1 Annex G
13	Volume resistivity @ 23°C ± 2°C	Ohm-cm	$\geq 10^{16}$	ASTM D 257
14	Dielectric Withstand, 1000 Volts/second rise @ 23°C ± 2°C	V/mm	≥30,000	ASTM D 149

5.4.4 Properties of Applied 3LPE Coating:

Table 5 - On Cured Epoxy (FBE) film of 3LPE Coating

Sl. No.	Properties	Unit	Requirements	Test Method
1	Minimum Epoxy Layer Thickness	mm	0.2	ISO 2808
2	Degree of Cure % Cure ΔTg	 % °C	 Minimum 95 -3°C ≤ΔTg≤ + 3°C	ISO 21809-1 Annex D
3	Holiday Detection (Test Voltage set to 5V per µm of minimum specified epoxy coating thickness)	V	No holidays	ISO 21809-2 Clause 10.3.2
4	Dry Adhesion	-	Rating 1 or 2	ISO 21809-2 Clause A.4
5	Hot Water Adhesion 24 h at 75°C+/3°C	-	Rating 1 to 2	ISO 21809-2 Clause A.16
6	Hot Water Adhesion 28 days at 75°C+/-3°C	-	Rating 1 to 3	ISO 21809-2 Clause A.16
7	Cross-Section Porosity	-	≤compared with Fig. A.11 of ISO 21809-2	ISO 21809-2 Clause A.12
8	Interface Porosity	-	≤compared with Fig. A.12 of ISO 21809-2	ISO 21809-2 Clause A.12
9	Flexibility at 0°C	Degree per ppd	No cracking, tear, disbondment or delamination at 2° ppd length	ISO 21809-2 Clause A.13
10	Impact Resistance at 0 °C	J	> 1.5	ISO 21809-2, Clause A.14

Table 6 - On Extruded Adhesive film of 3LPE coating

Sl. No.	Properties	Unit	Requirements	Test Method
1	Minimum Adhesive Layer Thickness	mm	0.20	ISO 2808
2	Strain at Break at 23°C ± 3°C	%	≥600	ISO 527-2

Copyright VCS Quality Services Pvt Ltd. – All

3	Stress at Yield at 23°C ± 3°C	MPa	≥8	ISO 527-2
4	Vicat Softening Temperature (A/50, 9.8 N)	°C	≥100	ISO 306

Table 7 - On HDPE Top Coat layer and 3LPE coating

Sl. No.	Properties	Unit	Requirements	Test Method
1	Continuity or Holiday of 3LPE coating @ 25 kV	---	Free of defects and discontinuities, delaminations, separations and holidays	ISO 21809-1 Annex B
2	Peel Strength of 3LPE Coating at 23°C +/-3°C at 80°C+/-3°C	N/mm	≥18 ≥5 No disbonding between steel & epoxy	ISO 21809-1 Annex C2
3	Impact strength of 3LPE Coating at 23°C +/-3°C	J/mm	>7	ISO 21809-1 Annex E
4	Indentation of PE top coat @ 230C+/-20C @800C+/-20C	Mm	≤0.2 ≤0.4	ISO 21809-1 Annex F
5	Strain at Break of PE Top Coat at 230C +/-30C	%	≥400	ISO 527-2
6	Product Stability during Application of PE Top Layer process	%	Δ MFR ≤20 (Variation between virgin compound granulate before application and coating after application of the same batch tested by applicator)	ISO 1133-1
7	Cathodic Disbondment of 3LPE Coating at 23°C+/-3°C/28d/-1.38V at 65°C+/-3°C/24h/-3.38V at 80°C+/-3°C/28d/-1.38V	mm	≤5 ≤4 ≤15	ISO 21809-1 Annex H
8	Flexibility of 3LPE Coating (-2°C to 0°C, cool for minimum1 h)	Degrees per pipe length diameter	No cracking at an angle 2°per pipe diameter length	ISO 21809-1 Annex I
9	Resistance to Hot Water Immersion of 3LPE Coating (80±3°C, 48 h)	mm	Average ≤2.0 and Maximum 3.0 mm	ISO 21809-1 Annex L
10	Specific Electrical Coating Resistance (23 °C ± 2 °C)	Ωm^2	$\geq 10^8$	DIN 30670 Annex J
11	Hardness of 3LPE Coating	Shore D	≥ 55	ISO 868

Copyright VCS Quality Services Pvt Ltd. – All

12	ΔTg	°C	-3°C ≤ΔTg≤ + 3°C	ISO 21809-1 Annex D

6.0 COATING DOCUMENTATION TO BE SUBMITTED:

6.1 Upon award of the CONTRACT, the Applicator / Contractor shall submit within two (2) weeks, for Owner approval, a detailed report in the form of bound manual outlining, but not limited to, the following:

6.1.1 Details of plant(s), location(s), layout, capacity and production rate(s).

6.1.2 Details of the equipment available to carry out the coating works including surface preparation, epoxy powder application and its recycling system, adhesive & polyethylene extrusion, moisture control facilities available for coating materials.

6.1.3 Details of process control and inspection equipment required for the coating process such as temperature control, thickness control, holiday testers, etc.

6.1.4 Facilities in the yard for unloading, handling, transport, production, storage, stockpiling, loading of bare and coated pipes and warehouses for storage of other coating materials.

6.1.5 Plant Organization Chart and availability of manpower including coating specialist.

6.1.6 Details of utilities/facilities such as water, power, fuel, access roads and communication etc.

6.1.7 Details of chemical pre-treatment facilities including process control, inspection equipment for phosphoric acid wash, de-ionized water wash, chromate treatment (if specified), drying system, etc.

6.1.8 Solid/ liquid waste management system procedure and facility details for safe disposal of chemical and organic substances.

After Owner has given approval; no change in plant set-up shall be made. However, unavoidable changes shall be executed only after obtaining written approval from Owner.

6.2 At least six (6) weeks prior to the commencement of production coating, a detailed procedure of the Applicator / Contractor's methods, material proposed, etc., shall be formulated by the Applicator/ Contractor and submitted for Owner approval in

Copyright VCS Quality Services Pvt Ltd. – All

the form of a bound manual. The procedure shall include, but not limited to, the following information and proposals:

6.2.1 Incoming inspection and pipe tracking;

6.2.2 Pipe inspection at the time of bare pipe receipt;

6.2.3 Steel surface preparation, including preheating, removal of steel defects, method of pipe cleaning, dust removal, abrasive blast cleaning and surface profile; methods of measurements and consumables;

6.2.4 Pipe heating, temperatures and its control prior to epoxy application;

6.2.5 Complete details of raw materials including current data sheets showing values for all the properties specified together with quality control and application procedure recommendations from manufacturer(s);

6.2.6 Application of FBE powder, adhesive and polyethylene, including characteristics, temperature, line speed, application window, curing time, etc.

6.2.7 Quenching and cooling, including time and temperature;

6.2.8 Quality Assurance System, Quality Plan, Inspection and Testing Plan and reporting formats, including instrument and equipment types, makes and uses, etc.

6.2.9 Detailed method of repair of coating defects duly classified depending upon nature and magnitude of defects and repair thereof including coating stripping technique;

6.2.10 Details of instrument and equipment calibration methods including relevant standards and examples of calibration certificates;

6.2.11 Complete details and inventory of laboratory and equipment for procedure qualification (PQT) and regular production;

6.2.12 Pipe handling and stock piling procedures, pipe end protection and protection against adverse ambient conditions during storage;

6.2.13 Sample of recording and reporting formats, including laboratory reports, certificates;

6.2.14 Complete details of test certificates for raw materials including test methods and standards used;

6.2.15 Test certificates from PE compound manufacturer for long term tests UV resistance / Thermal aging & Specific electrical coating resistance or coating resistivity. These test certificates shall not be older than three years;

6.2.16 Health, Safety and Environment Plans;

6.2.17 Storage details of coating materials and chemicals;

6.2.18 Continuous temperature monitoring at various stages of coating.

The APS (Application Procedure Specification) shall cover all items associated with quality control as defined in purchase specification & in this specification and mutually agreed.

Copyright VCS Quality Services Pvt Ltd. – All

The APS, including any revisions, shall be approved by the owner prior to the start of qualification and production.

7.0 APPICATION OF COATING:

7.1 Pipe Surface Preparation:

7.1.1 Unless specified otherwise, the pipes supplied shall be free from mill applied oil, grease, paints, or other visible contaminant but may be subjected to contamination occurring during transit.

7.1.2 Prior to cleaning operation, Applicator / Contractor shall visually examine the pipes and shall ensure that all defects and irregularities (lamination, sliver and scratches), flats and other damages have been repaired or removed as per applicable specification. The Applicator / Contractor shall also remove marking stickers, if any, present within the pipe. Record shall be kept of such marking on the stickers to ensure traceability of pipe after coating.

7.1.3 Any dirt, deleterious matter, salt and contaminants (like oil, grease, etc.) detrimental to the formation of a good coating bond or coating quality shall be removed prior to coating application. Contaminants may be removed by the use of non-oily solvents like acetone, xylol, etc. Gasoline or kerosene shall not be used for this purpose. Visible oil and grease spots shall be removed by solvent wiping. Solvent cleaning shall be in accordance with SSPC-SP1. Steel surface shall be allowed to dry before abrasive cleaning.

7.1.4 All pipes shall be preheated to a temperature of 65°C to 85°C prior to abrasive blast cleaning using induction heating or radiant heating. The external surface of the pipe shall be cleaned using two dry abrasive blast cleaning units (each having two centrifugal wheels) to achieve the specified surface cleanliness and profile. If specified, Chemical pre-treatment with phosphoric acid solution as per Clause 7.2 of this specification shall be carried out after the second abrasive blaster.

7.1.5 At no time shall the blast cleaning be performed when the relative humidity exceeds 85%. The Applicator / Contractor shall measure the ambient conditions at regular intervals during blast cleaning and coating operations and keep records of prevailing temperature, humidity and dew point. The blast cleaned surface shall neither be contaminated with dirt, dust, metal particles, oil, water or any other foreign material, nor shall the surface or its anchor pattern be scarred or burnished. All blast cleaned pipe surface shall be kept in dust free enclosure prior to coating. After blast cleaning, all surfaces shall be thoroughly inspected under adequate lighting to determine anchor pattern, quality of blasting and identify any surface defects prior to coating application. All surface defects such as slivers, scab, burns, laminations, welds spatters, scratches, etc. shall be removed / rectified, inspected and then pipes shall be re-blasted.

7.1.6 The abrasive blast cleaning units shall have an effective dust collection system to ensure total removal of dust generated during blast cleaning from the pipe surface. The equipment used for abrasive blast cleaning shall meet the specified requirements and shall be free from oil, water soluble salts and other forms of contamination to ensure that the cleaning process is not impaired. Traps, separators and filters shall be checked for condensed water and oil at the start of each shift and emptied and

Copyright VCS Quality Services Pvt Ltd. – All

cleaned regularly. During abrasive blast cleaning, the metallic abrasive shall be continuously sieved to remove dust, fines, corrosion products and other contaminants. The quality of abrasive working mix shall be checked at every four hours.

7.1.7 Abrasives used for blast cleaning shall comply ISO 11124. Hardness, size and ratio of shot and grit to be used in abrasive Blaster #1 & #2 shall be specified in the Inspection and Testing Plan (ITP) test plan to meet the required surface profile and other surface preparation criteria.

7.1.8 Abrasive cleaning carried out shall be such that the resultant surface profile is not dished and rounded when viewed with 30X magnification.

7.1.9 The blast cleaned surface of the pipe shall conform to near white metal finish (Sa 2½) of ISO 8501-1.

7.1.10 Surface of pipe after abrasive blast cleaning shall have an anchor pattern of 75 to 100 microns (RZ/ Ry5). This shall be measured for each pipe by portable digital surface roughness tester (Stylus Method) as per ISO 8503-4 and it shall be verified twice /shift. For retaining records, surface profile may be checked with Press-O-Film (Replica Tape Method) as per ISO 8503-5.

7.1.11 In addition to checking of degree of cleanliness (Sa 2 ½), blast cleaned pipe surface shall be also checked for degree of dust (dust level) and shape of profile. Degree of dust shall comply the requirements of ISO 8502-3.

7.1.12 After final abrasive blast cleaning, all pipes shall be tested for presence of soluble salts. One test shall be carried out on each pipe. The acceptance criteria shall be 20 mg/m2 or 2□g/cm² (max). An approved salt meter (SCM 400 or equivalent) shall be used to carry out using salt tests and shall be calibrated in accordance with the equipment manufacturer's recommendations.

Any pipe having salt contamination exceeding 2μg/cm² shall be de-ionized water washed and then re-checked for salt contamination.

In case, salt level is still greater than 2 μg/cm², chemical pre-treatment of steel pipes after abrasive blasting using phosphoric acid wash, followed by high pressure water wash (>1500 psi) shall be carried out as per clause 7.2. The applicator shall specify the method of chemical pre-treatment in coating documentation, namely ITP and APS.

In case, chemical pre-treatment of all steel pipes after abrasive blasting with phosphoric acid wash is a mandatory requirement, the same shall be specified by the Owner.

7.1.13 All surface defects such as slivers, scab, burns, laminations, welds spatters, gouges, scores, indentations, slugs or any other defects considered injurious to the coating integrity made visible during after first blast cleaning shall be reported to the Owner Representative and on permission from Owner Representative, such defects shall be removed by filing or grinding. After any grinding or rectification, the remaining wall thickness shall be checked and compared with specified thickness. Any pipes having thickness less than minimum specified thickness shall be kept aside and disposed off as per the instructions of Owner /Owner's Representative. The method employed to

Copyright VCS Quality Services Pvt Ltd. – All

remove surface defects may burnish or destroy the anchor pattern or contaminate the surface. Pneumatic tools shall not be used unless they are fitted with effective air/oil and water traps. Where burnishing results in destruction of anchor pattern, it shall be ensured that anchor pattern shall be restored during second abrasive blasting. Pipes having rectification by grinding and ground areas more than 50 mm shall be re-blasted thru using both the abrasive blasters.

7.1.14 Suitable plugs shall be provided at both pipe ends to prevent entry of any shot/grit into the pipe during blast cleaning operations. These plugs shall be removed after blast cleaning. Alternatively, the Applicator / Contractor may link the pipes suitably together to prevent the entry of any short/grit into the pipe.

7.1.15 All pipes shall be visually examined for presence of any shot/grit/loose material left inside the pipe during blast cleaning. Suitable mechanical means (stiff brush) shall be employed to remove the same before the pipes are processed further. In addition, inside surface of the pipe shall also be visually inspected for presence of any foreign material or shots and grit (free or embedded/sticking to pipe inside surface). The pipe inside surface shall be examined using sharp floodlight focused at the middle of the pipe at one end while inspection is carried out visually from another end. Any foreign material or shots/grit present in the pipe shall be completely removed by mechanical brush, high pressure air jets or by tilting of pipe, etc.

7.1.16 The maximum allowable elapsed time between completion of the final blasting operations and commencement of the chemical pre-treatment or coating process shall be such that no detectable oxidation of the surface occurs. Relative humidity readings shall be recorded every half an hour during the blasting operations in the immediate vicinity of the operations. The maximum elapsed time shall not exceed the duration given below:

Table 8

Relative Humidity (%)	Maximum Elapsed Time
> 80	2 hours
70 to 80	3 hours
< 70	4 hours

Any pipe not processed within the above time-humidity requirement shall be completely re-blasted. Any pipe showing flash rusting shall be re-blasted even if the above conditions have not been exceeded. The dew point shall be 3°c less than the pipe temp. & RH shall be less than 85%.

7.2 Chemical pre-treatment with phosphoric acid solution (if specified):

7.2.1 All pipes shall be provided chemical pre-treatment with phosphoric acid solution having concentration of 10% (+2%). Oakite 31 / 33 or equivalent shall be used to remove all soluble salts and other soluble contaminants.

7.2.2 The applicator shall provide data sheets and supporting documentation for the phosphoric acid to be used. The documentation shall verify that the phosphoric acid

Copyright VCS Quality Services Pvt Ltd. – All

is suitable for the treatment of line pipe prior to the application of the specific fusion bonded epoxy powder and the final coating will meet fully the requirements of this specification.

7.2.3 The pipe temperature immediately prior to the phosphoric acid treatment shall be in the range of 45 to 70°c.

7.2.4 The dwell time of the phosphoric acid wash on the pipe surface shall be minimum 20 s or as recommended by the manufacturer.

7.2.5 The ph of the pipe surface shall be determined after dwell time at a frequency of once per hour. The measured ph shall be as follows:

After phosphoric acid wash: 1 to 2

7.2.6 Phosphoric acid treatment shall be followed immediately by washing with de-ionized (di) water. De-ionized water used shall conform to the following requirements:

Table 9

Sl. No.	Properties	Unit	Requirements
a.	Turbidity	NTU	1 max.
b.	Conductivity	µS/cm	5 max.
c.	Hardness	-	Nil
d.	Total Alkalinity as CaCO3	mg/l	2 to 3
e.	Chloride as Cl-	mg/l	1 max.
f.	Sulphate as SO4=	mg/l	1 max.
g.	pH	-	6.5 to 7.5

Tests to determine the above properties shall be carried out in accordance with "Standard Methods for the Examination of Water and Wastewater" published jointly by American Public Health Association, American Water Works Association and Water Pollution Control Federation.

Quality of the de-ionized water shall be monitored at the start of each shift and at every four hours interval. Non-compliance of de-ionized water w.r.t. the above requirements shall cause stoppage of the operations.

High pressure water rinse (>1500 psi) after phosphoric acid wash shall be used to remove any trace of treatment residue. A minimum 1 liter of de-ionized water per square meter of pipe surface area shall be used and correct rinsing volume shall

Copyright VCS Quality Services Pvt Ltd. – All

be established in order to ensure that pH of pipe surface shall be in the range of 6 to 7.

7.2.7 The pH of the pipe surface after the de-ionized water rinse shall be checked at a frequency of once in every hour. pH value shall be as follows:

After de-ionized water wash: 6 to 7

7.2.8 After the de-ionized water wash, the pipe shall be dried with dry air, pre-heated to a temperature of 75°C to 85°C.

7.2.9 The salt tests shall be carried out after de-ionized water rinse at one end of each pipe at the blasting inspection bed. The acceptance criteria shall be 2µg/cm2. An approved salt meter (SCM 400 or equivalent) shall be used to carry out salt tests and shall be calibrated in accordance with the equipment manufacturer's recommendations.

7.3 Chemical Pre-treatment with Chromate Solution (If specified):

7.3.1 Following completion of abrasive blast cleaning, all pipe surface shall be chemically pre-treated with chromate solution having concentration of 10% (+2%), Gardobond 4504 PC or equivalent.

7.3.2 The applicator shall provide data sheets and supporting documentation for the chemical to be used. The documentation shall verify that the chemical is suitable for the treatment of line pipe prior to the application of the specific fusion bonded epoxy powder being applied and the final coating will meet fully the requirements of this specification.

7.3.3 The chemical pre-treatment shall be applied fully in accordance with the chemical manufacturer's instructions and in a manner that ensures 100% coverage of the pipe surface without introducing surface contamination.

7.3.4 The applicator shall check that the concentration of the chemical pre-treatment solution remains within the above range or as recommended by the chemical manufacturer for the pipe coating process. The concentration shall be checked at start of shift, every 4 h thereafter and every make-up of each fresh solution batch, using a method recommend by the chemical manufacturer. The applicator shall also ensure that the chemical pretreatment solution remains free from contamination at all times. Recycling of chemical pre-treatment solution is not permitted.

7.3.5 The applicator shall ensure that the temperature of the substrate is maintained between 40°C and 80°C and the chromate solution temperature does not exceed 60° or as recommended by the manufacturer.

7.3.6 The chromate coating shall be smooth, even, free from runs, drips or excessive application and lightly adherent with no flaking of the coating. The chromate coated steel must be thoroughly dried immediately after application.

7.4 Coating Application:

The external surface of the abrasive blasted cleaned pipe conforming to clause 7.1, 7.2 and 7.3 of this specification shall be immediately coated with 3-Layer Polyethylene (3LPE) coating in accordance with the procedures approved by Owner,

Copyright VCS Quality Services Pvt Ltd. – All

relevant standards and this specification. In general, the procedure shall be as follows:

7.4.1 Pipe Heating:

- Immediately prior to heating of pipe, all dust and grit shall be removed from inside of the pipe by a combination of air blast, brushing and vacuum cleaning. Suitable arrangement shall be made to protect the bevel ends from getting damaged during the coating operation.

- Induction heater shall be used for heating the pipe. The method shall be capable of maintaining uniform temperature along the total length of the pipe. Appropriate frequency shall be used to ensure 'deep heating' and intense skin heating is avoided. This shall be demonstrated on bare pipes prior to start of PQT. Oxidation of the cleaned pipe surfaces prior to coating (in the form of bluing or other apparent oxide formation) is not acceptable.

- External surface of the pipe shall be heated to about 225°C to 240 °C. The targeted temperature shall be selected to achieve proper wettability of steel surface. The pre-heating temperature tolerance above and below the selected target temperature should also be specified during PQT and cure time / line speed window setting should be done for the specified range. Required pipe temperature shall be maintained as it enters the FBE powder coating chamber.

  The required pipe target temperature can be selected outside the 225°C to 240°C range in case of specific epoxy manufacturer's recommendation, however in no case will the target temperature be selected below 200°C or exceed 250°C

- Temperature of the pipe surface shall be continuously monitored & recorded by using optical pyrometers and checked with contact thermometers. The recording method shall allow to correlate each line pipe.

  The monitoring instrument shall be able to raise an alarm/activate audio system (hooter) in the event of tripping of induction heater or in the event of pipe temperature being outside the range recommended by the manufacturer.

  - Any deviation from the application temperature range recommended by manufacturer shall be rectified. If immediate rectification is not feasible, the production shall be stopped until cause of deviation has been removed. Any pipe coated during the duration of temperature deviation shall be identified by marking and rejected. Such rejected pipes shall be stripped, re-cleaned and recoated.

  - Temperature measuring & monitoring equipment shall be calibrated twice every shift and/or as per Owner Representative's instruction.

  - Applicator shall ensure that pipe surface emissivity variations are minimized during pipe heating. To avoid significant

Copyright VCS Quality Services Pvt Ltd. – All

variance, more than once blasted joints should be coated at the same time and not mixed with joints blasted only once.

7.4.2 Pipe Coating:

- Subsequent to pipe heating, coating consisting of following layers shall be applied onto the pipe:

7.4.2.1 Electrostatic application of epoxy powder of minimum dry film thickness 0.20 mm, unless otherwise specified. The maximum thickness shall not exceed the epoxy thickness specified by epoxy powder manufacturer.

7.4.2.2 Co-polymeric or grafted adhesive application by side extrusion, having minimum thickness 0.20 mm;

7.4.2.3 HDPE application by side extrusion to minimum thickness as specified based on minimum 3LPE coating thickness on pipe body and weld seam as per Table1.

The coated pipe shall be subsequently quenched and cooled in water for a period that shall sufficiently lower the temperature of pipe coating (< 80°C) to permit handling and inspection.

- Only those coating material which are pre-qualified and approved by Owner / Consultant in accordance with provisions of Annexure I of this specification and qualified in accordance with requirements of clause 5.4.1, 5.4.2, 5.4.3, 5.4.4 and Table 2, 3, 4 & 5 of this specification shall be utilized for coating.

- All production coating application shall be carried out as per application parameters recommend by coating material manufacturers and procedure qualification tests (PQT) shall be carried out as per Clause 10.5 and Table 10, 11 &12 of this specification.

- Coating materials shall be inspected in accordance with the manufacturer's recommendation prior to coating application and it shall be ensured that the materials are moisture free. In case the relative humidity exceeds 80%, the adhesive and polyethylene material shall be dried using hot air dryer.

- Throughout the production, the blasting line speed, pre-heating temperature and coating line speed shall be monitored continuously and data recorded as per Table

Copyright VCS Quality Services Pvt Ltd. – All

10 & 11. Values during production run shall be within a range of +/-10% of the values and verified during PQT.

Variation of the recorded temperature values versus the set pre-heating temperature shall be within range of 5% along the pipe length with the exception of the cut back lengths.

During production, if the above parameters (i.e., blasting speed, pre-heating temperature and the coating line speed, etc.) require modification from the approved PQT, a new PQT shall be performed.

Prior to starting the application of fusion bonded epoxy powder, the recovery system shall be thoroughly cleaned to remove any unused powder remaining from a previous line pipe coating application. The use of recycled powder shall be permitted subject to:

7.4.2.4 Satisfactory qualification of the reclaimed system during PQT stage;

7.4.2.5 The proportion of the reclaimed powder in the working mix does not exceed 20%at any one time;

7.4.2.5.1 The quality of the recycled powder being routinely checked during production, at a minimum frequency of once per shift and consistently meets the requirements stated at per Clause para 5.4.1 and Table 2.

7.4.2.5.2 Dry compressed air (free of oil and moisture) shall be used in the coating chamber and FBE spraying system. Filters, dehumidifier / dryer as required along with control and monitoring system shall be provided for this purpose. Dew point of compressed air used to supply the fluidized bed, epoxy spray system and epoxy recycling system shall be at least (-) 40°C and this shall be shall be monitored and checked during PQT and regular production at frequency of start of each shift, then once in a shift and at any breakdown.

7.4.2.6 Air pressure in the epoxy spray guns shall be controlled, continuously monitored and recorded by using suitable instruments. The air pressure shall be controlled within the limits established during coating procedure qualification. The monitoring system shall be able capable of raising an alarm / activate audio system (hooter) in the event of change in air pressure beyond the set limits. Any deviation from the pre-set limits shall be rectified. If immediate rectification is not feasible, the production shall be stopped until cause of deviation has been removed. Any pipe coated during the duration of air pressure deviation shall be identified by suitable marking and rejected. Such rejected pipes shall be stripped and recoated.

Thickness of cured FBE layer shall be minimum 0.2 mm as specified in Table1.

7.4.2.7 Extruded adhesive layer shall be applied before gel time of the epoxy coating has elapsed and within the gel time window recommended by FBE manufacturer. Applicator shall establish, to the satisfaction of the Owner's Representative, that the adhesive is applied within the gel time window of epoxy and at the temperature recommended by the adhesive manufacturer. Applicator shall state the minimum and maximum time interval between epoxy and adhesive application at the proposed pre-

Copyright VCS Quality Services Pvt Ltd. – All

heat temperature and line speed. The extrusion temperature of the adhesive film shall be continuously recorded.

7.4.2.7.1 Thickness of extruded adhesive layer shall be minimum 0.20 mm as specified in Table 1.

7.4.3 Adhesive layer shall be continuous and free of void, air entrapment. Under no circumstances polyethylene top layer can be in contact FBE layer.

- Extruded polyethylene layer shall be applied over the adhesive layer within the time limit established during PQT stage and within the time/temperature range recommended by the manufacturer. The extrusion temperature of polyethylene film shall be continuously recorded. The monitoring instruments shall be independent of the temperature control equipment. The instruments shall be calibrated prior to start of each shift. The applied coating shall be cooled to a temperature (<80°C) that prevents handling damage during finishing and final inspection.

7.4.3.1 Thickness of extruded polyethylene layer and 3LPE coating shall be as specified in Table 1.

- Applicator shall ensure that there is no entrapment of air or void formation along the seam weld (where applicable) during application of coating. Air entrapment below the coating and also along the coating overlap shall be prevented by forcing the coating on to the pipe using high pressure roller of suitable design during coating application. In

Copyright VCS Quality Services Pvt Ltd. – All

case it is not adequately achieved, Applicator shall supplement by other methods to avoid air entrapment. The methods used shall be witnessed and approved by Owner.

- Resultant coating shall have a uniform gloss & aesthetic appearance and shall be free from air bubbles, wrinkles, holidays, irregularities, discontinuities, separation between layers of polyethylene & adhesive, etc.
- 3LPE coating shall terminate 150 mm (+) 20/ (-) 0 mm from pipe ends.

Applicator shall adopt mechanical brushing and / or tooling device for termination of 3LPE coating at pipe ends. Edge of the polyethylene layer shall be shaped to form a bevel angle not exceeding 30° in the direction of pipe axis.

FBE layer at the cut back shall protrude 20+/-5mm from the edge of the toe of the polyethylene layer. Damaged FBE toe shall be repaired aesthetically using compatible liquid epoxy, recommended by FBE manufacturer.

8 COATING PROCEDURE QUALIFICATION:

8.1 Procedure Qualification Tests (PQT):

Procedure Qualification Tests (PQT) shall be carried out only after obtaining written approval of the above procedures and Inspection and Testing Plan (ITP) from the Owner. No change in the procedure shall be made after the Owner has given approval.

At the start of the project, the Applicator shall, at his expense, carry out a coating Procedure Qualification Tests (PQT). During PQT, the following shall be carried out by the Applicator:

8.1.1 Qualify various procedures forming a part of coating operations mentioned above and as detailed subsequently;

8.1.2 Carry out raw material testing on the batches of all coating materials to be used for PQT viz. FBE epoxy powder, adhesive granules, PE top coat granules, confirming compliance to properties as per clauses 5.4.1, 5.4.2 and 5.4.3 respectively;

8.1.3 3LPE coating application to prove that plant, materials, and coating procedures result in a quality of end product conforming to the properties stated in Clause 5.3, 5.4.4 and

Copyright VCS Quality Services Pvt Ltd. – All

Table 10, 11 and 12 of this specification, relevant standards, specifications and material manufacturer's recommendations;

8.2 PQT's shall be carried for the following scenarios:

8.2.1 For each pipe diameter on maximum wall thickness (wall thickness to be decided by the Owner);

8.2.2 For each type of pipe (LSAW / HSAW / ERW);

8.2.3 For each coating material combination

8.2.4 For each plant.

Applicator shall give seven (7) working days' notice to witness all procedures and tests.

A batch representing a normal production run, typically 15 pipes, shall be coated in accordance with the approved coating procedure and the coating operations shall be witnessed by Owner or it's Representative. Out of these pipes, at least one pipe at the start & one pipe at the end of PQT shall be coated partly with epoxy layer (approx. 3-4 m), partly with both epoxy & adhesive layers (approx. 3-4) and rest portion with all the three layers. Remaining pipes shall have all the three layers.

At least 7 (seven) test pipes shall be selected by Owner or its Representative for coating procedure qualification tests and shall be subjected to procedure qualification testing as described hereinafter. Owner or its Representative shall witness all tests. Out of 7 (seven) test pipes, 2 (two) pipes partly coated with epoxy layers and partly coated with both epoxy & adhesive layers shall be included. Remaining 5 (five) test pipes shall have all the three layers.

On successful completion of PQT, coating of all seven pipes shall be removed completely and recoated as per approved coating procedure at Applicator's expense. Remaining 8 (eight) pipes will be accepted by Owner provided they meet the requirements of this specification and need not be stripped and re-cycled.

8.3 Qualification of Procedures:

8.3.1 Epoxy Powder Application & Recycling:

During procedure qualification, number of guns for electrostatic spray of FBE powder (virgin and reclaimed), air pressure in the epoxy spray guns, satisfactory functioning of monitoring system, line speed v/s coating thickness, etc. shall be established.

Dew point of compressed air used to supply the fluidized bed, epoxy spray system and epoxy recycling system shall be recorded during the PQT.

Also, Applicator shall remove 2 samples of reclaimed powder from the reclamation system. These samples of reclaimed powder shall be subjected to detailed visual examination, laboratory testing (gel time, density, thermal analysis, particle size, and moisture content, etc.). The properties of the reclaimed powder shall be within the range specified by the manufacturer of epoxy powder. In case the properties of the

Copyright VCS Quality Services Pvt Ltd. – All

reclaimed powder are out of the range specified by the manufacturer, Applicator shall not the use the reclaimed powder during the regular production.

8.3.2 Pipe Pre-heating:

The Applicator shall establish the temperature variation due to in-coming pipe temperature, line speed variation, wall thickness variation, emissivity, interruptions, etc. and document the same during the PQT stage. During PQT, proper functioning of pipe temperature monitoring and recording system including alarm / hooter shall be demonstrated to the Owner Representative.

8.3.3 Surface Preparation

The procedure to clean and prepare the pipe surface shall be in accordance with the requirements of this specification. Blasting speed, ratio of shot to grit shall be established during procedure qualification testing, such that the resultant surface profile is not dished and rounded. The qualification shall be performed through a visual inspection, measurement of roughness and check of the presence of salt contamination & dust on the abrasive blast cleaned pipe surface.

8.3.4 **Chemical Pre-treatment**:

8.3.4.1 Phosphoric Acid Wash followed by De-ionized Water Wash (If specified):

The procedure to apply the chemical pre-treatment viz. phosphoric acid wash followed by de-ionized water wash shall be in accordance with the recommendations of the manufacturer and shall result in intended cleaning requirements of this specification. Working solution preparation, maintaining concentration, application procedure including method of spreading, spreading rate, drying times, etc. depending upon the cleanliness / temperature of the incoming pipe and the line speed shall be established. Pipe pre-heat temperature vs line speed vs dwell time, rinsing procedure including pressure of the rinse water, testing & control, rectification measures, drying procedure etc. shall be clearly established during PQT. Also, the quality of the de-ionized water shall be established during PQT.

8.3.4.2 Chromate Treatment (if specified):

The procedure to apply the chromate treatment shall be in accordance with the recommendations of the manufacturer. Working solution preparation, maintaining concentration, pipe temperature before application, chromate solution temperature, application procedure including method of spreading, drying times, etc. depending upon the temperature of the incoming pipe and the line speed shall be established. Pipe temperature vs. line speed, testing & control, rectification measures shall be clearly established during PQT.

8.3.5 Coating Application:

The Owner Representative will check the correctness of each coating application operation, values of the main parameters of each operation, pre-heating pipe surface temperature prior to epoxy powder application temperature, line speed, fusion bonded epoxy gel / curing time, temperature and flow rate of co-polymer adhesive and

Copyright VCS Quality Services Pvt Ltd. – All

polyethylene, etc. and the same shall be recorded. These values shall be complied with during regular production.

8.4 Qualification of Coating Repair:

During PQT, Coating repair qualification shall be carried out using approved repair materials and approved procedure by competent Repair personnel or Insulator under supervision of QC Inspector or Engineer.

Type of Repair	No. of Location / Test	Detailed Inspection
Cosmetic Repair (By heating & rolling)	1 Pipe (2 Locations)	Visual
Repair with Melt Stick	1 Pipe (2 Locations)	Visual, Thickness and Holiday Inspection
Patch Repair	1 Pipe (2 Patches)	Visual, Thickness, Holiday Inspection @25 kV Peel Test: ≥ 2.5 N/mm @23±3°C; ≥ 0.2 N/mm @80±3°C; No separation of epoxy layer from the steel surface.
Heat- shrinkable Sleeve (HSS) Repair (System 14-B of ISO 21809-3	1 Pipes (2 HSS)	Visual, Thickness, Holiday Inspection @25 kV Peel Test (Table 17 of ISO 21809-3): ≥ 5 N/mm @23±3°C; ≥ 0.3 N/mm @80±3°C; No separation of epoxy layer from the steel surface.

On successful completion of coating repair qualification activities and its inspection & testing, Repair Materials, Repair Personnel or Insulator and Repair Procedure are qualified for the entire project.

8.5 Qualification of Applied Coating during PQT:

Procedure Qualification tests shall be carried out on partly coated epoxy, adhesive and fully 3LPE coated pipes, as detailed here under in accordance with Table 12 of this specification.

8.5.1 Tests on pipe coated partly with Epoxy (FBE) and partly with Epoxy & Adhesive Layers:

8.5.1.1 Degree of Cure:

Epoxy film samples (minimum 4 nos./pipe) shall be scrapped from the coated pipe and the samples shall be taken for cure test using Differential Scanning Calorimetry (DSC) procedure mentioned in Annexure D of ISO 21809-1. Care shall be taken to

Copyright VCS Quality Services Pvt Ltd. – All

remove the samples of full film thickness avoiding inclusion of steel debris. Glass transition temperature differential (☐Tg) and % cure (☐H1) shall comply with the requirements as specified in Clause 5.4.4 and Table 5.

8.5.1.2 Epoxy Layer Thickness:

Epoxy layer thickness shall be checked on two pipes at every one meter spacing at 3, 6, 9 and 12 o'clock positions using calibrated digital thickness gauge as per ISO 2808. The thickness shall comply with the requirement as specified in Table 1.

Digital thickness gauge shall be verified at the start of each shift using standard foil or shim within 5% tolerance.

8.5.1.3 Adhesive Layer Thickness:

Adhesive layer thickness shall be checked two pipes at every one meter spacing at 3, 6, 9 and 12 o'clock positions using calibrated digital thickness gauge as per ISO 2808. The thickness shall comply with the requirement as specified in Table 1.

Digital thickness gauge shall be verified at the start of each shift using standard foil or shim within 5% tolerance.

8.5.1.4 Holiday Inspection:

Epoxy coated portion of two pipes shall be subjected to holiday inspection as per Clause 10.3.2 of ISO 21809-2 and the test voltage shall set to 5V per µm of minimum specified epoxy coating thickness. There shall be no holiday on epoxy coated portion (Refer Clause 5.4.4 and Table 5).

8.5.1.5 Dry Adhesion:

Dry adhesion test on epoxy coated pipe section of two pipes shall be carried out as Clause A.4 of ISO 21809-2. The adhesion rating obtained shall be either 1 or 2 (Refer Clause 5.4.4 and Table 5).

8.5.1.6 Hot Water Adhesion:

24 h Hot Water Adhesion Test @75±3°C on epoxy coated pipe section of two pipes shall be carried out as per clause A.16 of ISO 21809-2. The rating obtained shall be from 1 to 2 (Refer Clause 5.4.4 and Table 5).

8.5.1.7 Porosity:

Cross-Section Porosity and Interface Porosity tests shall be carried out on the epoxy coated pipe section of two pipes. Test method shall be as per clause A.12 of ISO 21809-2. Acceptance shall be less than or equal to Figures A.11 & A.12 of ISO 21809-2 (Refer Clause 5.4.4 and Table 5).

8.5.1.8 Flexibility:

2° Flexibility test at 00C shall be conducted on ring specimen obtained from epoxy coated pipe section of two pipes as per clause A.13 of ISO 21809-2. No cracking,

Copyright VCS Quality Services Pvt Ltd. – All

tear disbondment or delamination shall be observed (Refer Clause 5.4.4 and Table 5).

8.5.1.9 Impact Test:

1.5 J Impact test at 00C shall be conducted on ring specimen obtained from epoxy coated pipe section of two pipes as per clause A.14 of ISO 21809-2. There shall be no holiday on impact area (Refer Clause 5.4.4 and Table 5).

8.5.2 Tests on Pipes Coated with all Three Layers:

8.5.2.1 Visual Inspection:

Immediately following the coating, each coated pipe shall be visually checked for imperfections and irregularities of the coating. The coating shall be of natural colour and gloss, smooth and uniform and shall be blemish free with no dust or other particulate inclusions. The coating shall not show any defects such as blisters, pinholes, scratches, wrinkles, engravings, cuts, swellings, disbonded zones, air inclusions, tears, voids or any other irregularities. Special attention shall be paid to the areas adjacent to the longitudinal weld (if applicable), adjacent to the cut-back at each end of pipe and within the body of the pipe.

In addition, inside surface of the pipe shall also be visually inspected for presence of any foreign material or shots and grit (free or embedded/sticking to pipe inside surface). The pipe inside surface shall be examined using sharp floodlight focused at the middle of the pipe at one end while inspection is carried out visually from another end.

8.5.2.2 Coating Thickness Measurement:

All 3LPE coated pipes shall be subject to coating thickness measurement using digital thickness gauge in accordance with ISO 2808. Digital thickness gauge shall be verified at the start of each shift using standard foil or shim within 5% tolerance.

The coating thickness shall be determined by taking at least 12 measurements at locations uniformly distributed over the length and periphery of each pipe. If any of these 12 readings is below the minimum coating thickness, carry out additional four readings around this area. The average of the additional four readings and the initial reading shall be higher than the minimum thickness.

Take the measurements at points distributed along four equally spaced longitudinal lines at pipe length with three equally circumferential lines on the middle of the pipe and at a distance of 300 mm from the end of the coating cutback.

In case of welded pipes, 6 of these readings shall be made at the apex of the weld seam, uniformly distributed over the length of the coated pipe. All readings must meet the minimum requirements. Acceptance criteria shall be as per Clause 5.3

Copyright VCS Quality Services Pvt Ltd. – All

and Table 1.

8.5.2.3 Holiday Detection:

High voltage pulse DC full circle electronic holiday detector (with audible alarm and precise voltage control) shall be used to check continuity of applied finished coating.

Applicator shall calibrate the holiday detector at least once every 4 hours of production. Applicator shall have necessary instruments or devices for calibrating the holiday detector.

Holiday detector shall be set to test voltage min. 25 kV and testing speed shall not exceed 300 mm / s. Holiday detection shall be carried out in accordance with Annex B of ISO 21809-1. The finished coating shall be free of holiday (Refer Clause 5.4.4 and Table 7).

Any pipe coating shall be rejected if no. of holiday and size of defect/ damage/ holiday exceed as detailed in Clause 13 of this specification.

8.5.2.4 Peel (Adhesion) Strength:

Five test pipes shall be selected for Peel strength tests as per Annex C (C2) of ISO21809 -1. On each of the selected pipes, three peel tests shall be performed for each specified temperature (23±3°C& 80±3°C), one at each end and one in the middle of the pipe. Specified peel strength requirement at each temperature shall be complied with and there shall be no disbonding between steel & epoxy (Refer Clause 5.4.4 and Table 7). Length of peel shall be minimum 140 mm. None of test pipes shall fail.

8.5.2.5 Impact Strength:

Three test pipes shall be selected for impact strength test as per Annex E of ISO 21809-1 at 23±3°C. Minimum thirty (30) impacts (with impact energy min. 7J/mm) located equidistant (>50 mm) along the length of the pipe shall be performed. Immediately after testing, the test area shall be subjected to holiday detection @25 kV. There shall be no holiday on impact area (Refer Clause 5.4.4 and Table 7).

8.5.2.6 Indentation Resistance:

Five test pipes shall be selected for indentation resistance test and two samples from each pipe at each temperature shall be taken and tested as per Annex F of ISO 21809-1 for temperatures 23±2°C and 80±2°C. The test shall comply with the specified requirement (Refer Clause 5.4.4 and Table 7) and none of the test samples shall fail.

8.5.2.7 Air Entrapment:

One sample each from pipe body and on weld (if applicable) shall be taken from all 3LPE coated pipes. Strips from adhesive strength tests or coated pipes shall be used

Copyright VCS Quality Services Pvt Ltd. – All

to determine the porosity of the finished coating. Strip shall be cut from longitudinal / spiral weld (if applicable) and examined for presence of voids.

Peel strength test strip shall be viewed from the side and at the failure interface. At the peel strength test location, utility knife shall be used to cut the edge of the coating to a 45° angle and viewed under microscope. Similar examination shall be done in the coating cut back area.

One sample each either on the peel strength strip or coated pipe and strip cut from the longitudinal weld (if applicable) shall be examined for air entrapment per shift. Strips shall be viewed from the side.

All examination shall do using a 30X magnification hand-held microscope. The polyethylene and adhesive layers shall have no more than 10% of the observed area taken up with air entrapment (porosity or bubbles). Air entrapment shall not occupy more than 10% of the thickness in each case. Bubbles shall not link together to provide a moisture path to the epoxy layer.

8.5.2.8 Degree of Cure:

Epoxy film samples (minimum 4 no., equally spaced) shall be scrapped from one 3LPE (PQT) coated pipe and the samples shall be taken for cure test using Differential Scanning Calorimetry (DSC) procedure. Silicon coated sulphite paper or other equivalent shall be placed between the epoxy layer and adhesive layer immediately after epoxy application, to ensure physical separation of epoxy & adhesive as well as to prevent contamination of epoxy with adhesive layer, at a location from where the epoxy samples are to be removed for the test. Care shall be taken to remove the samples of full film thickness avoiding inclusion of steel debris. Glass transition

Copyright VCS Quality Services Pvt Ltd. – All

temperature differential (ΔTg) and % Cure shall comply with the specified requirements (Refer Clause 5.4.4 and Table 7).

8.5.2.9 Cathodic Disbondment:

The following CD tests shall be carried out on samples selected from 1 PQT test pipe in accordance with Annex H of ISO 21809-1:

- 65±3°C/24h/-3.38V;
- 23±3°C/28d/-1.38V;
- 80 ±3°C/28d/-1.38 V.

The maximum disbondment acceptance criteria shall be as per Clause 5.4.4 and Table 7 of this specification.

8.5.2.10 Strain at Failure:

Six samples each from three selected coated pipes i.e., total 18 samples in all shall be tested in accordance with ISO 527-2 and the test shall comply with the specified requirement (refer Clause 5.4.4 and Table 7). None of the test samples shall fail.

8.5.2.11 Stress at Yield:

Six samples from one selected coated pipe shall be tested in accordance with ISO 527-2 and the test shall comply with the specified requirement (refer Clause 5.4.4 and Table 7). None of the test samples shall fail.

8.5.2.12 Resistance to Hot Water Immersion:

One test pipe shall be selected for hot water immersion test previously subjected to holiday test. Three samples shall be prepared from the selected test pipe and shall be placed in vessel filled with tap water already pre-heated to 80±3°C for 48 hours. The test method shall be as per Annexure L of ISO 21809-1.

Loss of adhesion shall be average ≤2.0 and maximum 3.0 mm beyond 5mm on each side of the corner. All samples shall pass the test (refer Clause 5.4.4 and Table 7).

8.5.2.13 Flexibility:

One test pipe shall be selected for Flexibility test. The test method shall be as per Annexure I of ISO 21809 Part 1. Three samples shall be prepared from the test pipe. The samples shall be placed in freezer and cooled between -2°C and 0°C and hold at that temperature for 1 hour and then bent at 2°ppd over fixed radius mandrel.

No cracking, tear, disbondment or delamination shall observe in any of the samples (refer Clause 5.4.4 and Table 7).

8.5.2.14 Product Stability during Application of HDPE Top Layer:

Three test pipes shall be selected for product stability test of PE top layer. The test method shall be as per ISO 1133-1. One sample shall be prepared from each test pipe. The measured MFR value of the applied PE layer shall be within ±20% of the

Copyright VCS Quality Services Pvt Ltd. – All

measured MFR value of the virgin compound granulate PE of the same batch (refer Clause 5.4.4 and Table 7).

8.5.2.15 Specific Electrical Coating Resistance:

The long term Specific Electrical Coating Resistance test of 3LPE coated pipes section shall be conducted for 100 days @ 23°C in accordance with Annex J of DIN 30670. Tested value shall be ≥108 Ωm² (refer Clause 5.4.4 and Table 7).

The test certificate (not older than 3 years) submitted by the PE manufacturer shall be of recognized independent test laboratory with a track record of 3LPE coating testing. The test laboratory should be NABL / ISO 17025 accredited and shall have approval for conducting the above specific test as per DIN 30670.

Owner may decide to get the test conducted for 3LPE coating applied during PQT and get tested for the above long-term test at the cost of the coating applicator at an accredited independent laboratory as per above requirement.

8.5.2.16 UV Resistance and Thermal Ageing:

The followings long term tests for extruded PE top material shall be conducted in accordance with Annex G of ISO 21809-1:

8.5.2.16.1 UV Ageing Test:

Continuous irradiation of UV xenon lamp;

Black standard Temperature: 65±3°C;

Relative Humidity: 65±5%;

Test Duration: 2210 h.

8.5.2.16.2 Thermal Ageing Test:

Test Temperature: 100±3°C;

Test Duration: 4800 h (200 d).

Tested values shall meet the requirements as specified in Clause 5.4.4 and Table 7.

The test certificate (not older than 3 years) submitted by the PE manufacturer shall be of recognized independent test laboratory with a track record of 3LPE coating testing. The test laboratory should be NABL / ISO 17025 accredited and shall have approval for conducting the above specific tests as per ISO 21809-1.

Owner may decide to get the test conducted for PE top coat material 3LPE coating applied during PQT and get tested for the above long-term tests at the cost of the

Copyright VCS Quality Services Pvt Ltd. – All

coating applicator at an accredited independent laboratory as per above requirements.

8.5.2.17 Hardness:

One PQT pipe shall be subjected to shore D hardness checking for PE top coat surface using calibrated Durometer in accordance with ISO 868. Minimum 5 measurements shall be taken on entire coated pipe surface. All measured hardness values shall be ≥ 55 Shore D (refer Clause 5.4.4 and Table 7).

8.5.2.18 Residual Magnetism:

One PQT pipe shall be subjected to residual magnetism checking at both pipe ends at 4 locations (circumferentially at 0°, 90°, 180°& 270° positions) using calibrated Gauss meter. All measured values shall meet the requirement of Table 12.

After completion of the qualification procedures and PQT as per above, the Applicator shall prepare and issue to Owner for approval a detailed report of the coating procedures, methods, equipment and tools used and document above tests and inspection including test reports/certificates of all materials and coatings tested. This document will be termed as Application Procedure Specification (APS) and shall be referred during subsequent application of coating of production pipes.

On successful completion of PQT, coating of all seven test pipes shall be removed and completely recoated as per approved coating procedure at Applicator's

Copyright VCS Quality Services Pvt Ltd. – All

expense. Remaining eight pipes will be accepted by Owner, provided they meet the requirements of this specification and need not be stripped and re-cycled.

Only upon written approval from Owner, Applicator/ Contractor shall commence production coating.

9 RE-QUALIFICATION OF PROCEDURE QUALIFICATION:

9.1 The Applicator shall re-establish the requirements of qualification and in a manner as stated before or to the extent considered necessary by Owner, in the event of, but not limited to, the following:

9.1.1 Every time there is a change in the previously qualified procedure;

9.1.2 Every time there is a change in the manufacturer and change in formulation of any of the raw materials and change in location of raw material manufacture;

9.1.3 Every time the coating yard is shifted from one location to the other or every time the critical coating equipment (induction heater, epoxy spray system, extruder, etc.) are shifted;

9.1.4 Any change in line speed during coating application;

9.1.5 Any time when in Owner's opinion the properties are deemed to be suspect during regular production tests.

Owner reserves the right to conduct any or all the test required for qualification through an independent laboratory or agency at the cost of Applicator, when in Owner's opinion, the results are deemed suspect. Owner's decision shall be the final.

10 COATING PROCEDURE TESTS DURING PRODUCTION:

Production tests shall be carried out on partly coated epoxy, adhesive and 3LPE coated pipes as detailed here under and Table 10, 11 & 12 of this specification

10.1 Raw Material Testing:

Raw material testing shall be conducted on all the batches of all coating materials to be used for production viz. FBE epoxy powder, co-polymeric melt adhesive granules, PE top coat granules to confirm compliance as per clause 5.4 sub clauses 5.4.1,

10.2 External Pipe Surface Preparation:

Prior to coating application, the pipe steel surface shall be abrasive blasted as per Clause 7.1, followed by inspected and tested after 2nd abrasive blasting as per Table 10 to ensure compliance to required surface cleanliness, surface roughness, residual dust level, salt contamination, etc.

10.3 Chemical Pre-treatment with Phosphoric Acid Solution and / or Chromate Treatment (If specified by the Owner):

Depending on requirements, each pipe shall be subjected to Chemical Pre-treatment with Phosphoric Acid Solution followed by high pressure water rinse and / or Chromate

Copyright VCS Quality Services Pvt Ltd. – All

Treatment in accordance with Clauses 7.2 & 7.3 of this specification. Treated pipe surface shall be inspected and tested in accordance with Table 11 in order to ensure characteristics of pipe surface prior to induction heating.

10.4 Pre-heating of Pipe Surface:

Pre-heating of the pipe surface shall be carried using suitable rated induction coils. The temperature and other application parameters, set during procedure qualification testing will be maintained during production and the pr-heat temperature of the pipe before entering the FBE booth shall be recorded and monitored continuously as per Table 12 of this specification.

10.5 3LPE Coating Application:

10.5.1 3LPE coating application shall be carried out as per Application Procedure Specification (APS) approved by the Owner. After successful completion of coating procedure qualification as per Clause 8, various stages of coating application shall be measured, monitored and inspected in accordance with Table 12 of this specification.

Table 10 — Requirements for inspection of surface preparation of pipe

SI. No.	Properties	Test Method	Requirements	Frequency	
				During PQT	During Production
1	Surface condition of pipe before blasting	Visual Inspection	Free of contaminations and surface defects	Each pipe	Each pipe
2	Relative humidity	Measurement/ as required	Record (relative humidity shall be < 85%)	Every ½ h	Every ½ h
3	Pipe temperature before blasting	Thermocouple	min. 3°C above dew point	Each pipe	Every 1 h
4	Size, shape and properties of virgin abrasive	Visual + Certification as per ISO 11124-3	Conformity to certificate and compliance with manufacturing/ working procedure	Every batch	Every batch

SI. No.	Properties	Test Method	Requirements	Frequency	
				During PQT	During Production
5	Water soluble contamination abrasives	ASTM D4940	Conductivity ≤ 60 µS/cm	Once	1/shift

Copyright VCS Quality Services Pvt Ltd. – All

6	Abrasive blasting line speed	Stop watch	As per approved Qualification procedure	Each pipe	1/shift
7	Soluble salt after blasting (at one end)	ISO 8502-6 or ISO 8502-9 or SSPC Guide 15	Salt (Chloride) content as (NaCl) max. 20 mg/m2 (2 µg/cm2)	Each pipe	Each pipe
8	Surface roughness of blasted surface	ISO 8503-4 or ISO 8503-5	Rz / Ry5: 75µm to 100 µm	Each pipe	Each Pipe
9	Visual inspection of blasted surface	ISO 8501-1	Grade Sa 2½	Each pipe	Each pipe
10	Presence of dust after dust removal	ISO 8502-3	max. class 2 (for both size and quantity)	Each pipe	Every 1 h

Table 11 — Requirements for Inspection of Chemical Pre-treatment (If specified):

SI. No.	Properties	Test Method	Requirements	Frequency	
				During PQT	During Production
A: Chemical-pretreatment with Phosphoric Acid Solution (Oakite 31/ Oakite 33 or Equivalent)					
1	Concentration of phosphoric acid solution	Titration	10(+2) %	Prior to start of PQT	Start of shift, every 4 h thereafter and every make-up of each fresh solution batch
2	Pipe Temperature before acid wash	Thermocouple	45°C to 750C	Each pipe	Every 1 h
3	Dwell time	Stop watch	Minimum 20 s or as per manufacturers recommendation No drying out of acid solution on surface	Each pipe	Every 1 h
4	pH of pipe surface after acid wash	Litmus paper	1 to 2	Each pipe	Every 1 h

SI. No.	Properties	Test Method	Requirements	Frequency	
				During PQT	During Production
5	Pressure of water rinse after acid wash	Pressure Gauge	Min. 1500 psi (*)	Each pipe	Every 1 h

Copyright VCS Quality Services Pvt Ltd. – All

	(*A minimum of 1 liter of DI water per m2 shall be used to be established during PQT)				
6	pH of pipe surface after high pressure water rinse	Litmus paper	6 to 7	Each pipe	Every 1 h
7	Temperature of hot air used for pipe drying after water rinse	Monitor and record	75°C to 850C	Once	Every 1 h
8	Quality of de-ionized water	As per Clause 7.2.6	As per Table 9	One Sample (Prior to start of PQT)	At start of shift and then Every 4 h
B: Chemical-pretreatment with Chromate Solution (Gardobond 4504 PC or Equivalent (If specified):					
9	Concentration of chromate solution	Titration	10(+2) %	Prior to start of PQT	At start of shift, every 4 h thereafter and every make-up of each fresh solution batch
10	Chromate solution temperature	Thermocouple or Glass Thermometer	<60°C or as recommended by the manufacturer	Once	Every 1 h
11	Pipe Temperature before application of chromate solution	Thermocouple	40°C to 800C or as recommended by the manufacturer	Each pipe	Every 1 h
12	Coverage	Visual	100% coverage of pipe surface	Each pipe	Each pipe

Table 12 — Requirements for Inspection of Plant Applied Coating (PQT & Production)

Sl. No.	Properties	Test Method	Requirements	Frequency	
				During PQT	During Production
1	Dew Point of compressed air	ASTM D4285	No indication of oil, water, Dew Point: at least -40°C	Prior to start of PQT	Start of shift & then 1/shift and at breakdown
2.0	Epoxy (FBE) Layer				
2.1	Visual inspection of pipes prior to introduction to coating line	Visual	No rust	Each pipe (100% surface area)	Each pipe (100% surface area)

Copyright VCS Quality Services Pvt Ltd. – All

2.2	Induction Coil Setting	As per APS and Clause 7.4.1.3 of this specification	As per approved APS	Each pipe	Continuous monitoring
2.3	Pipe temperature	As per APS & Clause 7.3.1.3 of this specification	225 to 2400C	Continuous monitoring & recording	Continuous monitoring & recording
2.4	Recording of application parameters (Coating line speed. No. of epoxy guns, epoxy gun pressure, inter-coat time, % of)	As per Clause 7.4	As per Approved APS	Each pipe	Start of shift & then 1/shift and each breakdown / restart (partly coated)
2.5	Air pressure in epoxy spray guns	As per Clause 7.3.2.7 of this specification	As per APS	Each pipe	Continuous monitoring & recording
2.6	Testing of reclaim FBE powder (If used) (Gel time, density, thermal analysis, particle size, moisture content)	As per APS & Clause 4.3 a, 5.4.1 & 8.4.1 of this specification	As per Clause 5.4.1 & 7.4.2.5, Table 2	Once in PQT	Once / shift
2.7	Minimum Epoxy Layer Thickness (DFT)	ISO 2808, Clause 8.6.1 b.	≥ 0.200 mm	2 Pipes	Start of shift & at breakdown / restart (partly coated)

Sl. No.	Properties	Test Method	Requirements	Frequency	
				During PQT	During Production
2.8	Degree of Cure % Cure ΔTg	ISO 21809-1 Annex D, Clause 8.6.1.1.	Min. 95% -3°C ≤ΔTg≤ + 3°C	4 Samples x 2 Pipes	1/shift (1sample)
2.9	Holiday Detection (Test Voltage set to 5V per µm of minimum specified epoxy coating thickness)	ISO 21809-2 Clause 10.3.2, Clause 8.6.1.4.	No holidays	2 Pipes	Not required

Copyright VCS Quality Services Pvt Ltd. – All

2.10	Dry Adhesion	ISO 21809-2 Clause A.4, Clause 8.6.1.5.	Rating 1 or 2	2 Pipes	Not required
2.11	Hot Water Adhesion 24 h at 75°C+/3°C	ISO 21809-2 Clause A.16, Clause 8.6.1.6.	Rating 1 to 2	2 Pipes	1/shift (1 sample)
2.12	Cross-Section Porosity	ISO 21809-2 Clause A.12, Clause 8.6.1.7.	≤compared with Fig. A.11 of ISO 21809-2	2 Pipes	1/shift (2 samples)
2.13	Interface Porosity	ISO 21809-2 Clause A.12, Clause 8.6.1.7.	≤compared with Fig. A.12 of ISO 21809-2	2 Pipes	1/shift (2 samples)
2.14	Flexibility at 0°C	ISO 21809-2 Clause A.13, Clause 8.6.1.8.	No cracking, tear, disbondment or delamination at 2° ppd length	2 Pipes	Not required
2.15	Impact Resistance at 0 °C	ISO 21809-2, Clause A.14, Clause 8.6.1.9.	> 1.5 J	2 Pipes	Not required
3.0	Adhesive Layer:				
3.1	Minimum Adhesive Layer Thickness	ISO 2808, Clause 8.6.1.3.	≥ 0.200 mm	2 Pipes	Start of shift & at breakdown / restart (partly coated)
3.2	Extrusion temperature of adhesive	As per APS & Clause 7.4.2.8 of this specification	As per APS or recommended by manufacturer	Continuous monitoring & recording	Continuous monitoring & recording

Sl. No.	Properties	Test Method	Requirements	Frequency	
				During PQT	During Production
4.0	HDPE Layer and 3LPE Coating:				
4.1	PE Extrusion temperature	As per APS & Clause 7.4.2.9 of this specification	As per APS or recommended by manufacturer	Continuous monitoring & recording	Continuous monitoring & recording
4.2	Coating temperature after water quenching	As per APS and Clause 7.4.2.1 & 7.4.2.9 of this specification	< 80°C	Each pipe	Every 1 h
4.3	Visual Inspection	Visual, Clause 8.6.2.1.	As per Clause 8.6.2.a. of this specification	Each pipe 100% surface area	Each pipe 100% surface area
4.4	Coating Thickness	ISO 2808,	Table 1 of this specification	Each pipe	Each pipe

Copyright VCS Quality Services Pvt Ltd. – All

		Clause 8.6.2.2.			
4.5	Holiday Detection (test voltage shall be min. 25 kV & travel speed shall not exceed 300 mm/s)	ISO 21809-1, Annex B, Clause 8.6.2.3.	No holiday in finished coating	Each pipe 100% surface area	Each pipe 100% surface area
4.6	Peel Strength of 3LPE Coating at 23°C +/-3°C at 80°C+/-3°C	ISO 21809-1 Annex C2, Clause 8.6.2.4.	≥18 N/mm 23±3°C, ≥5 N/mm 80±3°C, (No disbonding between steel & epoxy)	5 pipes x 3 tests (@ both ends & middle)	2 h for pipe ends (cutback portion) & 4 h for middle of pipe
4.7	Impact Strength @ 23±3°C, 30 impacts	ISO 21809-1 Annex E, Clause 8.6.2.5.	>7J/mm. No holiday on impact area	3 Pipes	2 Pipes/shift
4.8	Indentation resistance @ 23 ± 2°C @ 80 ± 2°C	ISO 21809-1 Annex F, Clause 8.6.2.6.	≤ 0.2 mm @ 23±2 °C, ≤ 0.4 mm @ 80±2 °C.	5 Pipes X 2 Samples at each temp.	2 pipes/ shift
4.9	Air Entrapment	Clause 8.6.2.7. of this specification	≤ 10% & as per clause 8.6.2.g. of this specification	5 pipes x 1 sample from body & 1 sample from weld (if applicable)	1Pipe/shift 1 sample from body & 1 sample from weld (if applicable)
4.10	Degree of Cure	ISO 21809-1 Annex D, Clause 8.6.2.8.	-3°C ≤ΔTg≤ + 3°C, Cure: Min 95%.	1 Pipes x 4 Samples	1st Pipe and 2 Pipes /shift (1sample/pipe)

Sl. No.	Properties	Test Method	Requirements	Frequency	
				During PQT	During Production
4.11	Cathodic Disbondment		Average Disbondment Radius)	---	---
	@65 °C/ 24 h; -3.38 V	ISO 21809-1 Annex H, Clause 8.6.2.9.	≤ 4 mm	1 Pipe	1 Pipe / day
	@23 °C/ 28 d; -1.38 V		≤ 5 mm	1 Pipe	Not required
	@80 °C/ 28 d; -1.38 V		≤ 15 mm	1 Pipe	Not required
4.12	Strain at Break @23±3°C	ISO 527-2, Clause 8.6.2.10.	≥ 400%	3 Pipes x 6 Samples	Once per PE batch

Copyright VCS Quality Services Pvt Ltd. – All

4.13	Stress at Yield at 23°C ± 3°C	ISO 527-2, Clause 8.6.2.11.	≥17 MPa	1 Pipe x 6 Samples	Not required
4.14	Resistance to Hot Water Immersion (80±3°C, 48 h)	ISO 21809-1 Annex L, Clause 8.6.2.12.	Avg. ≤ 2 mm & Max. ≤ 3 mm,	1 Pipe	Once/ day
4.15	Flexibility (@0°C, 2°ppd)	ISO 21809-1 Annex I, Clause 8.6.2.13.	No cracking, tear, disbondment or delamination	1 Pipe (3 Samples)	Not required
4.16	Product Stability during Application of PE Top Layer	ISO 1133-1, Clause 8.6.2.14.	Δ MFR: ≤20 % (Variation between virgin compound granulate before application and coating after application of the same batch tested by applicator)	Each pipe	1st Pipe / Shift
4.17	Specific Electrical Coating Resistance (23 °C ± 2 °C)	DIN 30670 Annex J, Clause 8.6.2.15.	≥108 Ωm²	Review of Independent test certificate not older than 3 years as per clause 8.6.2.o	Not required (However, Owner may request to conduct the test for 3LPE coating at an accredited independent laboratory)

Sl. No.	Properties	Test Method	Requirements	Frequency	
				During PQT	During Production
4.18	UV Resistance and Thermal Ageing	ISO 21809-1 Annex G, Clause 8.6.2.16	Δ MFR: ≤35 %	Review of Independent test certificate not older than 3 years as per clause 8.6.2. p	Not required (However, Owner may request to conduct the test for PE top coat material at an accredited independent laboratory)
4.19	Hardness	ISO 868	≥ 55 Shore D	One pipe	Not required

Copyright VCS Quality Services Pvt Ltd. – All

		Clause 8.6.2.17.			
4.20	Cutback of 3LPE coating	Clause 7.4.2.12 of this specification	Length: 150mm (+)20/(-)0mm, Bevel Angle: <30°, FBE Toe: 20+/-5mm	Each pipe	Each pipe
4.21	Residual Magnetism at each pipe end (@ 4 points: 0°, 90°, 180°& 270°)	Hall-Effect Gauss meter, Clause 8.6.2.18.	Avg: ≤ 2.0 mT (20 gauss). No single reading ≥ 2.5 mT (25 gauss)	1 Pipe x 4 readings	1/shift
4.22	Coating Repairs	Visual ISO 21809-1 Annex B	As per Clause 13 of this specification	1 Pipe	Each damage / defect

11 QUALITY ASSURANCE:

11.1 The Applicator shall have established a documented quality system that ensures that the requirements of this specification are met in all aspects. The Quality System shall be based upon ISO 9001 or equivalent.

11.2 The Applicator shall have established a Quality Assurance Group within its organization that shall be responsible for reviewing the quality system and ensuring that it is implemented.

11.3 The Applicator shall submit the procedures that comprise the Quality System to the Owner for agreement.

11.4 The Applicator quality system shall pay particular attention to the control of suppliers and sub-contractors and shall ensure that the requirements of this specification are satisfied by the suppliers and sub-contractors operating quality system in their organization.

11.5 The Applicator shall, prior to the commencement of work, prepare and issue a Quality Plan for all of the activities required satisfying the requirements of this specification. The plan shall include any sub-contracted work, for which the sub-contractor's quality plans shall be submitted. The plan shall be sufficiently detailed to indicate sequentially for each discipline the requisite quality control, inspection, testing and certification activities with reference to the relevant procedures and the acceptance standards.

11.6 The Applicator quality system and associated procedures may, with due notice, be subject to formal audits. The application of quality control by the Applicator will be monitored by the Owner Representatives who will witness and accept the inspection, testing and associated work required by this specification.

11.7 The coating pipe mill shall have internal tracking system for pipe traceability during regular coating to reduce manual interference. SAP base system is preferred.

Copyright VCS Quality Services Pvt Ltd. – All

12 HANDLING, STORAGE AND TRANSPORTATION OF BARE & COATED PIPES:

12.1 The Applicator shall be fully responsible for the pipe and for the pipe identification marking from the time of "taking over" of bare pipe from Owner until such time that the coated line pipes are `handed over' and/or installed in the permanent installation as the case may be according to the provisions of the CONTRACT.

At the time of "taking over" of bare pipes Applicator/ Contractor shall inspect and record all the relevant details referred above including pipe defects in the presence of Owner. All pipes shall be checked for bevel damages, weld seam height, dents, gouges, corrosion and other damages. Owner Representative shall decide whether pipe defects / damages are suitable for repair. Damage to the pipes that occur after the Applicator/ Contractor has taken delivery such as dents, flats, or damage to the weld ends shall be cut off or removed and pipes rebevelled and repaired again as necessary. The cost of this work, as well as that of the pipe lost in cutting and repair shall be to the Applicator/ Contractor's account. All such works shall be carried out after written approval of the Owner. Any reduction in length shall be indicated in the Applicator/ Contractor’s pipe tracking system.

12.2 The Applicator shall unload, load, stockpile and transport the bare pipes within the coating plant(s) using suitable means and in a manner to avoid damage to pipes.

The Applicator shall stockpile the bare pipes at the storage area of the coating plant. The Applicator shall prepare and furnish to Owner a procedure/calculation generally in compliance with API RP-5L1& API RP 5LT and prevailing guidelines/rules of statutory bodies (Road/ rail) for stacking of pipes of individual sizes, which shall be approved by Owner prior to commencement of work.

12.3 The Applicator/ Contractor shall load, unload, transport and stockpile the coated pipes within the coating plant using approved suitable means and, in a manner, to avoid damage to the pipe and coating. The Owner shall approve such procedure prior to commencement of work.

12.4 Coated pipes may be handled by means of slings and belts of proper width (minimum 60 mm) made of non- abrasive/non-metallic materials. In this case, pipes to be stacked shall be separated row by row to avoid damages by rubbing the coated surface in the process of taking off the slings. Use of round sectional slings is prohibited. Forklifts may be used provided that the arms of the forklift are covered with suitable pads, preferably rubber.

12.5 Bare/coated pipes at all times shall be stacked completely clear from the ground, at least 500 mm, so that the bottom row of pipes remains free from any surface water. The pipes shall be stacked at a slope so that driving rain does not collect inside the pipe. Bare/coated pipes may be stacked by placing them on ridges of sand free from stones and covered with a plastic film or on wooden supports provided with suitable cover. This cover can be of dry, germ-free straw covered with plastic film, otherwise foam rubber may be used. The supports shall be spaced in such a manner as to avoid permanent bending of the pipes.

Stacks shall consist of limited number of layers such that the pressure exercised by the pipe's own weight does not cause damages to the coating. Applicator/ Contractor shall

Copyright VCS Quality Services Pvt Ltd. – All

submit calculations for Owner approval in this regard. Each pipe section shall be separated by means of spacers suitably spaced for this purpose. Stacks shall be suitably secured against falling down and shall consist of pipe sections having the same diameter and wall thickness. The weld seam of pipes shall be positioned always in a manner so as not to touch the adjacent pipes.

The bevel protector shall be removed and stored for reuse after completion of coating application. The ends of the pipes during handling and stacking shall always be protected with bevel protectors

12.6 The lorries used for transportation shall be equipped with adequate pipe supports having as many round hollow beds as there are pipes to be placed on the bottom of the flat bed type lorry/ trailer. Total width of the supports shall be at least 5% of the pipe length and min. 4 nos. support shall be provided. These supports shall be lined with a rubber protection and shall be spaced in a manner as to support equal load from the pipes. The rubber protection must be free from all nails and staples where pipes are in contact. The second layer and all following layers shall be separated from the other with adequate number of separating layers of protective material such as straw in plastic covers or mineral wool strips or equivalent, to avoid direct touch between the coated pipes.

All stanchions of lorries used for transportation shall be covered by non-abrasive material like rubber belts or equivalent. Care shall be exercised to properly cover the top of the stanchions and other positions such as reinforcement of the truck body, rivets, etc. to prevent damage to the coated surface. Slings or non-metallic straps shall be used for securing loads during transportation. They shall be suitably padded at the contact points with the pipe

12.7 Materials other than pipes and which are susceptible of deteriorating or suffering from damages especially due to humidity, exposure to high thermal excursions or other adverse weather conditions, shall be suitably stored and protected. Deteriorated materials shall not be used and shall be replaced at Applicator/ Contractor's expenses. These materials shall always be handled during loading, unloading and storage in a manner so as to prevent any damage, alteration and dispersion. When supplied in containers and envelopes, they shall not be dropped or thrown, or removed by means of hooks, both during the handling operations till their complete use. During unloading, transport and utilization, any contact with water, earth, crushed stone and any other foreign material shall be carefully avoided.

Applicator/ Contractor shall strictly follow Manufacturer's instructions regarding storage temperature and methods for volatile materials that are susceptible to change in properties and characteristics due to unsuitable storage. If necessary, the Applicator/ Contractor shall provide for a proper conditioning.

12.8 In case of any marine transportation of bare/coated line pipes involved, the same shall be carried out in compliance with API RP 5LW. Applicator/ Contractor shall furnish all details pertaining to marine transportation including drawings of cargo barges, storing/stacking, sea fastening of pipes on the barges/marine vessels to the Owner for approval prior to undertaking such transportation works. In addition, Applicator/ Contractor shall also carry out requisite analyses considering the proposed

Copyright VCS Quality Services Pvt Ltd. – All

transportation scheme and establish the same is safe and stable. On-deck overseas shipment shall not be allowed.

13 REPAIR OF COATING:

Applicator shall submit to the Owner, its methods and materials proposed to be used for executing a coating repair and shall receive approval from Owner prior to regular production.

In open storage, the repair coating materials must be compatible with parent 3LPE coating and able to withstand a temperature of at least (+) 80°C without impairing its serviceability and properties.

Applicator shall furnish manufacturer's test certificates for the repair materials clearly establishing the compliance of the repair materials with the applicable coating requirements indicated in this specification.

All pipes leaving coating plant shall have sound external coating with no holiday or porosity on 100% of the surface.

13.1 Defects, repairs and acceptability criteria shall be as follows:

13.1.1 Pipes showing porosities or very small damage not picked up during holiday test and having a surface less than 0.5 cm2 or linear damage (cut) of less than 3 cm shall be repaired by melt stick using material of same quality;

13.1.2 Damages caused to coating by handling such as scratches, cuts, dents, gouges, not picked up during holiday test, having a total reduced thickness on damaged portion not less than 2 mm and an area not exceeding 10 cm2, shall be rebuild by Repair Patch material only and without exposing to bare metal;

13.1.3 Defects of size exceeding above mentioned area or holidays of length less than 300 mm shall be repaired with heat shrink repair patch by exposing the bare metal surface;

13.1.4 Defects exceeding the above and in number not exceeding 1 per pipe and linear length not exceeding 500 mm shall be repaired using Heat Shrinkable Sleeves (HSS), HTLP 80 or equivalent;

13.1.5 More than two (02) repairs are not allowed in single length of pipe and cumulative area for these repairs shall not exceed 100 cm2 per pipe;

13.1.6 Pipes with bigger damage shall be stripped and recoated.

13.1.7 In case of coating defect close to coating cut back, applicator shall remove the coating throughout the entire circumference of the pipe down to the steel surface and increase the coating cut back length. Now if the coating cutback exceeds 150 mm linear length

Copyright VCS Quality Services Pvt Ltd. – All

of pipe then the coating shall be repaired by the use of heat shrink sleeves thereby making up the coating cut back length of 150 mm;

13.1.8 Notwithstanding the above, if defects exceed 70 mm from the original coating cut back length, the entire coating shall be removed and the pipe shall be recycled through the entire coating procedure;

13.1.9 No Circumferential sleeve (full encirclement) repair is permitted within 100 mm length of the coating cut back area;

13.2 Irrespective of type of repair, the maximum numbers of repair of coating shall be as follows:

13.2.1 Holiday repair of size ≤ 100 cm2 attributable to process of coating application shall be maximum one number per pipe;

13.2.2 In addition to the above, defects to be repaired by heat shrink patch/sleeve shall be maximum 1 (One) per pipe;

13.2.3 Defects exceeding the above limits shall cause pipe coating rejection, stripping and recoating.

The above is exclusive of the repairs warranted due to testing as per this specification.

All repairs carried out to coating for whatever reason shall be to the account of Applicator/ Contractor.

Cosmetic damages occurring in the polyethylene layer only need not be repaired by exposing up to steel surface, as deemed fit by the Owner or its Representative. In any case the Applicator / Contractor shall establish his material, methods and

Copyright VCS Quality Services Pvt Ltd. – All

procedure of repair that result in an acceptable quality of product by testing and shall receive approval from Owner prior to use.

All repairs shall result in a coating thickness no less than the parent coating thickness. Applicator / Contractor shall test repairs to coating as and when required by Owner.

Repair procedures/ process shall be qualified during PQT.

Only qualified Repair personnel or Insulator shall be allowed to conduct the repair work and all repaired pipes shall be identified by indicating alphabet 'R' after the coating number.

14 MARKING:

14.1 Applicator/ Contractor shall place marking on the outside surface of the coating at one end of the coated pipe, and marking shall indicate, but not limited to the following information:

14.1.1 Applicator's Name and Logo;

14.1.2 Pipe number, Heat number;

14.1.3 Pipe diameter, wall thickness, material grade & length;

14.1.4 Coated pipe number;

14.1.5 Colour band (if required);

14.1.6 Any other information considered relevant by Owner;

14.1.7 Inspection Mark/Punch;

14.1.8 Coating Class and Max, design Temp. (If required).

Applicator/ Contractor shall obtain prior approval on marking procedure to be adopted from the Owner.

15 INSPECTION, MEASURING AND TEST EQUIPMENT:

All inspection, measuring and test equipment shall be good working condition and have valid calibration certificates traceable to ISO 17025 accredited calibration laboratory or equivalent. In addition to the above, the following measuring devices shall be verified at a regular interval during execution of coating activities.

Device Name	Reference Clause No.	Frequency of in-house Verification	Tolerance
Digital Roughness Gauge	7.1.10	Start of shift	Standard value ± 5 %

Copyright VCS Quality Services Pvt Ltd. – All

Digital Contact Thermometer	7.4.1.5	Twice / shift	Standard value ± 2 %
Optical Pyrometer	7.4.1.5	Twice / shift	Standard value ± 2 %
Digital Thickness Gauge	8.6.1.1, 8.6.1.2, 8.6.2.2	Start of shift	Standard value ± 5 %
Holiday Detector	8.6.2.3.	Every 4 hours	Standard value ± 2 %

16 RELEASE OF FINISHED COATED PIPES:

Upon successful completion of various in-process inspection and testing, Applicator QC department shall prepare all the records (including release documents) of qualification and production stages. Owner and / or its representative shall review all records and documents for endorsement and then finally release the finished product for dispatch or shipment.

Copyright VCS Quality Services Pvt Ltd. – All

ANNEXURE-I

LIST OF ACCEPTABLE COMBINATIONS OF COATING MATERIALS

The following combinations of coating materials are considered acceptable. In case any of the combinations listed below are offered, details regarding properties of the offered materials need not be furnished with bid. However, In the event of award of contract, Applicator/ Contractor shall furnish the combination(s) proposed and re-confirmation of compatibility of the proposed combination (s) from the raw materials Manufacturers.

Epoxy Powder (Manufacturer)	**Adhesive (Manufacturer)**	**PE Compound (Manufacturer)**
JOTAPIPE AC 2002 (Formerly, CORRO-COAT EP-F 2002HW) (JOTUN) or SCOTCHKOTE 226N (3M) or PIPECLAD 2000/PIPECLAD 1000 (SHERWIN-WILLIAMS)	LUCALEN G3710E (LYONDELLBASELL)	LUPOLEN 4552 D (LYONDELLBASELL)
JOTAPIPE AC 2001 (Formerly, CORRO-COAT EP-F 2001) / JOTAPIPE AC 2002 (Formerly, CORRO-COAT EP-F 2002HW) / JOTAPIPE AC 1003 (Formerly, CORRO-COAT EP-F -1003HW) (JOTUN) or SCOTCHKOTE 226N (3M) or PIPECLAD 2000/PIPECLAD 1000 (SHERWIN-WILLIAMS)	ME 0420 (BOREALIS)	HE 3450H (BOREALIS / BOROUGE)
JOTAPIPE AC 2001 (Formerly, CORRO-COAT EP-F 2001) (JOTUN) or PIPECLAD 2000/PIPECLAD 1000 (SHERWIN-WILLIAMS)	LE149V (HYUNDAI ENGINEERING PLASTICS)	ET509B (HYUNDAI ENGINEERING PLASTICS)

Although the above combinations would be acceptable to the owner, the responsibility of suitability for application, performance and compliance to the coating system requirements shall unconditionally lie with the applicator / contractor.

Copyright VCS Quality Services Pvt Ltd. – All

ENERGISING QUALITY

VCS QUALITY SERVICES PVT. LTD.

STANDARD SPECIFICATION

FOR

WATER CROSSING

(CONVENTIONAL TRENCHING)

VPC – SS – PP - 2005

03	04.01.2022	SR	MC	HK	HK
Rev. No	Date	Prepared By	Checked By	Approved By	Authorized By

UNCONTROLLED COPY	:	If printed
CONTROLLED COPY	:	If in soft and signed

Copyright VCS Quality Services Private Limited – All rights reserved

REVISION RECORD						
Rev.	**Revision Date**	**Prepared by**	**Checked by**	**Approved by**	**Authorized by**	**Revision Description**
00	23.06.2017					Issued as Standard Specification
		AS	SM	AD	SK	
01	19.09.2019					Document formatting, Cover Page, Doc numbering updated from SS-PL-001 to VPC-SS-PL-0001 keeping Revision Number Same)
		SSS	SM	AD	SK	
02	28.01.2020					Document numbering updated from VPC-SS-PL-0001 to VPC-SS-PP-2004
		MB	MC	AD	SK	
03	04.01.2022					Revised as marked, Doc No Change from 2004 to 2005
		SR	MC	HK	HK	

Copyright VCS Quality Services Private Limited – All rights reserved

ABBREVIATIONS:

ASME	American Society of Mechanical Engineers
ASTM	American Society of Testing of Materials
API	American Petroleum Institute
OISD	Oil Industry Safety Directorate

Copyright VCS Quality Services Private Limited – All rights reserved

CONTENTS

1.0 SCOPE 5

2.0 REFERENCE CODES, STANDARDS AND SPECIFICATIONS 5

3.0 GENERAL REQUIREMENT 6

4.0 TRENCHING 9

5.0 POLLUTION CONTROL MEASURES 12

6.0 CONTINUOUS CONCRETE COATING 12

7.0 HYDROSTATIC PRE-TESTING 12

8.0 INSTALLATION 12

9.0 INSTALLATION OF PARALLEL PIPELINES 14

10.0 BACKFILLING AND BANK PROTECTION 14

11.0 POST-INSTALLATION HYDROSTATIC TEST 16

12.0 POST-CONSTRUCTION SURVEY 16

13.0 FINAL CLEAN-UP 16

14.0 DOCUMENTATION 17

Copyright VCS Quality Services Private Limited – All rights reserved

1.0 SCOPE

This specification covers the minimum requirements for the various activities to be performed by Contractor for the construction of pipeline major water crossings by conventional trenching method. Provisions of this specification are applicable only for " Water Crossing" specifically named as such in the contract.

This specification shall be read in conjunction with the condition of all specifications and documents include in the contract between company and contractor.

2.0 REFERENCE CODES, STANDARDS AND SPECIFICATIONS

The latest edition(edition in force at the time of floating the enquiry) of following Codes,Standards and regulations are referenced in this specification and all provisions of these reference codes,standards and regulations shall be applicable.

AMERICAN SOCIETY OF MECHANICAL ENGINEERS (ASME)

B 31.4	:	Pipeline Transportation system for liquid Hydrocarbon & other liquids.
B 31.8	:	Gas Transmission and Distribution Piping Systems.

AMERICAN PETROLEUM INSTITUTE (API)

RP 1102	:	Liquid Petroleum Pipeline Crossing Railroads and Highways
1109	:	Marking Liquid Petroleum Pipeline Facilities
1104	:	Welding of Pipelines and Related Facilities

PNGRB REGULATIONS :

G.S.R 808(E) T4S	:	Regulations for Natural Gas Pipelines
G.S.R. Infra/ T4S/ P&PPL	:	Regulations for Petroleum and Petroleum products pipelines
G.S.R. 612(E) T4S	:	Regulations for CGD Network

PIPE LINE SAFETY STANDARD

Part 192, Title 49	:	Transportation of Natural and other Gases by

Copyright VCS Quality Services Private Limited – All rights reserved

Part 195 : Transportation of Liquid by Pipe Line

COMPANY STANDARD SPECIFICATIONS

Following Company specifications shall form integral part of this specification and shall be complied with when applicable to the works covered in the contract.

VPC-SS-PP-2001	Standard Specification for Pipeline Construction
VPC-SS-PP-2010	Standard Specification for Pipeline Concrete Weight Coating of Onshore Pipelines
VPC-SS-PP-2014	Standard Specification for Hydrostatic Testing of Onshore Pipelines
VPC-SS-PP-2015	Standard Specification for Pipeline Markers

In case of conflict between various requirements of this specification and reference standards mentioned above, more stringent requirement shall apply unless otherwise agreed by Company.

3.0 GENERAL REQUIREMENT

a. If specified, Contractor shall carry out all geotechnical and hydrological investigation as per relevant specification. Contractor shall also carry out scour calculation based on the above and submit all reports and calculation to company for review and approval.

b. Contractor shall comply with all the conditions and requirements issued by Authorities having jurisdiction in the area where the work is to be performed. Contractor shall, at his own responsibility, obtain necessary permits from the Authorities having jurisdiction, for performing its work.

c. Contractor shall take full responsibility for the suitability, stability and safety of all operations and methods involved in the work.

d. Contractor shall be deemed to have inspected and examined the work area and its surroundings and to have satisfied himself so far as practicable as to the form and nature thereof, including sub-surface conditions, hydrological and climatic conditions, the extent and nature of the work and materials necessary

Copyright VCS Quality Services Private Limited – All rights reserved

for the completion of the work, and the means of access to the work area.

e. Prior to start of any work, Contractor shall carry out a pre-construction survey of the major water crossings and. acquaint himself with site conditions and to collect any data regarding the water velocity and the tidal variation in the flow pattern and shall verify the suitability of his equipment and the method of construction.

f. Contractor shall, with due care and diligence, execute the work in compliance with all laws, by-laws, ordinances, regulation etc., and provide all services and labor, inclusive of supervision thereof, all materials, excluding the materials indicated as "Company Supplied Materials", equipment appliances or other things of whatsoever nature required in or about the execution of the work, whether of a temporary or permanent nature.

g. Contractor shall be deemed to have obtained all necessary information as above mentioned as to risks, contingencies and all other circumstances, which may influence the work.

h. Contractor shall, in connection with the work, provide and maintain at his own-costs all lights, guards, fencing, watching etc., when and where necessary or required by Company or by any duly constituted Authority for the protection of the work and properties or for the safety and the convenience of public and/or others.

i. If no public roads exist, Contractor shall arrange at his own for access to work areas at no extra time and cost to Company.

j. Before start of the field construction work, Contractor shall submit the following for approval of each major water crossing

- Installation method.
- Proposed time schedule indicating start and finish dates with detailed break-up showing critical activities.
- Layout, location and other drawings / sketch of work area.
- Details of equipment (including number and capacity of equipment deployed)
- Manpower deployment during construction
- Proposed sub-contractors and / or vendors (if any) along with their scope of work.

The description of the installation method as a minimum shall include the following:

Copyright VCS Quality Services Private Limited – All rights reserved

a. Preparation of fabrication yard and launching area along with proposed Layouts.

b. Pipeline construction details (including hauling, stringing, welding, NDT, concrete coating, etc.).

c. Study of water currents in relation to the method of launching (on bottom and on surface)

d. Preparation of sheet piling/Details of Dams/Coffer dams/diversion of water methodology proposed.

e. Calculations For stability of pipeline during launching and final test.

f. Grading of bank area & record of it original level for restoration purpose.

g. Buoyancy Studies.

h. Pre-test procedure.

i. Pulling or other installation method and related calculations / analysis including rope test, checking of winch/crane pulling capacity etc.

j. Pulling arrangement including launch way and anchoring and braking device.

k. Trench correction before launching / lowering.

l. Method of positioning and sinking / lowering of pipeline.

m. Method of rectification of damages to the pipeline / coating, during launching.

n. Method of backfilling and bank protection.

o. Final test procedure after backfilling. .

p. Safety system adopted

q. Communication system adopted during construction/testing/survey.

r. Abandonment and recovery procedures in case of failure.

s. Procedure for corrosion coating of field joint

Approval by Company of the methods used by Contractor shall in no way relieve Contractor from the sole responsibility for safe and satisfactory installation of the crossing.

Copyright VCS Quality Services Private Limited – All rights reserved

4.0 TRENCHING

4.1 EXCAVATION

Contractor shall dredge or excavate the trench for the water crossing in conformity with the approved drawings. Dredging of the trench shall be executed as accurately as possible.

The trench shall be excavated to such depth as, required to provide the minimum cover and the pipeline configuration as specified. The pipeline profile of the crossing shall be followed as accurately as possible. Before laying, the trench shall be cleaned and leveled. The trench shall be subject to inspection by Company prior to installation of the pipe.

Contractor will not be entitled for any compensation in terms of time and cost, if his work is hampered or delayed due to weather conditions, any obstacles / or any traffic on the spot, where work is executed.

Contractor is fully responsible for the execution of the blasting (wherever permitted), the dredging and excavation work, hopping of the spoil; transportation, dumping on land or in water, all to be executed in agreement with Authorities, land owners and Company.

Contractor may be obliged to dredge or excavate a trench deeper or wider than indicated in the drawings. in order to-properly lay the pipeline in unstable (underwater) areas, or near and adjacent to the banks of water-courses. It shall be understood that Contractor is aware of such problems at the time of his Bid and that when such additional excavation is required, it shall be done by Contractor as part of the work and that he will install the necessary provisions and/or temporary works such as sheet-piling, special filling materials, etc. at no extra cost to Company.

Contractor, if so desired by Company, shall make cross profiles at intervals of not more than 10.0 m of the bottom of the watercourse along the surveyed centerline of the water crossing. In such a case, horizontal measurements shall be taken by triangulation or tapping between known points and shall be made with such accuracy that the location of each vertical measurements is known with 1.0 m. Vertical measurements shall be taken with a sonic recording device, or with line and rod, as directed by Company and shall be taken with such an accuracy that

Copyright VCS Quality Services Private Limited – All rights reserved

each depth is known within 0.2 m. Vertical measurements shall be taken at points averaging not more than 5.0 m apart and no two measurements shall be more than 7.0 m apart. The cross profiles shall extend at least 10 m on both sides of the top of the trench.

All measurements shall be recorded by Contractor. Company may witness such measurements. The resulting profile, corrected to the elevation of the undisturbed watercourse, shall then be the reference profile. Said profile shall be plotted on a 1:200 vertical and horizontal scale.

Contractor shall keep the trench in good condition until the pipe is laid, and no claim is to be made to the Company by reason of its caving either before or after the pipe is laid. Contractor shall do whatever is required to excavate the trench, install the pipe in it and backfill the trench in accordance with the specifications at no extra cost to Company.

Immediately before installation of the water crossing in the excavated trench, Contractor shall prepare a profile of the trench bottom along the surveyed center line of the water crossing for comparison with the reference profile. Contractor shall also make cross sections of the trench at intervals of not more than 50 m. All profiles and cross section measurements shall be taken as specified and, if required, shall be witnessed by Company. These data shall be submitted to Company for approval.

Contractor shall grade the trench in such a manner as to give the maximum amount of uniform support to the pipeline when it is lowered or pulled into place. The maximum unsupported span shall not exceed 10.0 m.
In submerged sections, where rock or gravel is encountered in the bottom of the trench, padding is required. The thickness of the padding under the concrete coated pipe shall at least be 0.5 m and after installation at least 0.5 m around the pipe.
Blasting, if any, and padding shall be included in the Contractor's work.

In case of major rivers, Navigational traffic shall not be obstructed, unless permission has been given thereto. Contractor shall issue all necessary, publication according to the local requisitions. Instructions given by Authorities shall be followed accurately and immediately, so that traffic encounters no hindrance. During the execution of dredging work by Contractor, bearings, measurements and levels shall be taken by or on behalf of Company. Contractor

Copyright VCS Quality Services Private Limited – All rights reserved

shall render assistance for this purpose and make available for Company appropriate survey
boats, fully manned and equipped, before the trench excavation work of the water crossing can be started-

4.2 PUMPING LINES

In case Contractor uses pumping lines to discharge the spoil, he shall take care of the necessary permits.

Pumping lines, discharges and siphons shall be installed by Contractor and removed before the completion of the work. At crossing with existing roads, the pumping lines shall be led through a casing pipe bored/jacked under the road or led through a porch over the road. A stress calculation must then be handed over to Company. The necessary provision to embank the dumping area and also the spoil basins shall be made by Contractor. Contractor is responsible for transportation of the spoil and dumping on land and is liable for damage to works of third parties caused by leakage of pumping lines, etc. Contractor shall at all-time prevent overflow of pumping water, spoil or sand over embankments, parcels or roads. Further more, Contractor shall safeguard Company from claims of compensation by third parties due to encountered damage.

4.3 SPOIL

Spoil which is not dumped on and including spoil acquired after cleaning the water crossing trench, shall be transported and dumped in places, designated thereto by agreement between Contractor and Authorities and approved by Company. Spoil shall be transported in (split), barges; only those barges shall be used that avoid spilling during transportation due to incorrect closing of the flaps, etc. Spoil, which is dumped outside the designated places, shall be removed by Contractor at first notice by Company.

4.4 DIKES, DAMS AND WEIRS

Contractor shall install temporary provision in the existing dikes, dams, etc. to prevent flooding of low areas.
Therefore in general, in existing dikes, dams, etc. a double substituting weir must be installed before start of excavation in the existing dike or dam. Such a double substituting weir can be a closed wall of sheet piling, supported by soil. The provisions shall be such that the underwater profile of the dredged trench, the water flow and water movement caused by boats/ ships etc. cause no slides / cave-ins of the dike or dam.

Copyright VCS Quality Services Private Limited – All rights reserved

5.0 POLLUTION CONTROL MEASURES

Contractor shall take all necessary precautions not to pollute river water and banks during entire construction operation. Equipment deployed and, construction methodology adopted shall be-such, that minimum damage is caused to the existing environmental conditions. Union and State Government requirements concerning pollution control and environmental protection 'shall be fully complied with.

6.0 CONTINUOUS CONCRETE COATING

Contractor shall provide concrete coating over the pipeline including the bends in accordance with the specification issued for the purpose and approved procedure. Contractor shall coat the weld joints in order to arrive at the continuously concrete coated pipeline. However the concrete coating shall be applied after the hydrostatic pretest.

7.0 HYDROSTATIC PRE-TESTING

Contractor shall hydrostatically pre-test the pipe string of each water crossing before installation as per approved procedure.
Joint coating of the welds shall be done after this pre-test.
The section of the pipeline corresponding to the crossing shall, before installation, be subjected to a minimum hydrostatic test pressure equal to 1.25 / 1.5 times design pressure as applicable. The combined equivalent stress in the pipeline due to bending and test pressure shall not exceed 95% of the SMYS of the pipe material.
After the temperature has been stabilized, the pressure shall be maintained in the pipeline for at least six hours and recorded by manothermograph. During test, the Contractor shall check all welds for leakage. Failure, if any, during the test shall be rectified by the Contractor. If the same is due to failure on account of any cause other than defect in materials supplied by Company, the repairs shall be done free of cost, to the satisfaction of Company.

8.0 INSTALLATION

Contractor shall submit a detailed scheme for the method, proposes to adopt for installing the pipeline to Company for approval. Contractor shall calculate all stresses in the pipeline while laying and check whether the stresses remain within permissible limits. A set of all calculations shall be submitted to Company for approval.

Copyright VCS Quality Services Private Limited – All rights reserved

Contractor shall perform all work required to install the water crossings, including the possible appurtenances indicated in the drawings. The water crossings shall be installed in such a manner as to comply with the requirements and conditions stated by the Relevant Authorities issuing the permits. Contractor shall pay special attention to minimize any damage to embankments and dikes in the vicinity of water crossings.

The equipment for launching shall be arranged in such a way that the pipeline is laid without impact or jerking and is not subjected to stresses of any type other than those which are allowable. Minimum allowed radius of curvature shall be followed, particularly at the end of the launching way towards the water in the freely suspended section.

During the launching the pipe shall have a submerged weight of 30 kg/meter with a tolerance of ±10%.

After the water-crossing section has been installed in place, Contractor shall fill this pipeline section including the pertaining land pipeline sections with water for the final testing.

Contractor shall check if the position and depth of the water crossing are in accordance with the approved drawing, by means of a profile of the pipeline, before and after the water crossing section is filled with water. Contractor shall lower each pipeline section, which is not sufficiently deep by dredging or jetting the underlying ground.

The maximum allowed horizontal deviation from the required center-line shall be limited by the following:

For pipeline dia up to including 500 mm	:	300 mm
For pipeline dia greater than 500 mm	:	500 mm

Prior to backfill the pipeline shall, when laid in the trench, conform to the bottom contour of the trench grade, so that it will be firmly, uniformly and continuously supported within the permissible limits of unsupported spans as specified in Para 4.1.

If the pipe does not properly fit the trench or does not rest at sufficient depth to satisfy the minimum requirements of cover as specified in approved drawings, the Contractor shall make necessary corrections to trench so that the pipe, when finally in position in the trench, shall fully meet the specification, failing which Contractor may be asked to remove the pipeline. This shall be done at no extra time and cost to the Company.

Copyright VCS Quality Services Private Limited – All rights reserved

9.0 INSTALLATION OF PARALLEL PIPELINES

When parallel pipelines are required to be installed across major water crossing, Contractor shall further comply with the following requirements.

Depending on the diameter of the parallel pipelines, the characteristics of the crossing and the limitation of Contractor's equipment, Contractor may propose installation of the parallel pipelines either together in a combined operation or separately in a common trench.

If the pipelines are installed together, the minimum clear distance between the parallel pipelines (measured from the outside diameters of the concrete coated pipes) shall be 500 mm. Contractor shall provide spacers (at sufficient intervals along the length of the pipe sections), securely fixed to the pipes, or shall propose other suitable alternative methods, so as to ensure that the stipulated minimum clear distance is maintained. The buoyancy of the combined installation (pipes+spacers), shall be checked before installation. The spacers may be removed before the trench is backfilled.

Contractor shall furnish detailed drawings/calculations for the pipe assembly, showing the details of spacers/other arrangements for Company's approval before start of construction.

If the parallel pipelines are installed separately in a common trench, the minimum clear distance between the parallel pipelines in the trench shall be 5000 mm. Contractor shall ensure that this minimum spacing is maintained till the time the trench is backfilled.

CONSTRUCTION EQUIPMENT

All critical construction equipment deployed shall have a factor of safety of 2 (minimum) over the calculated loads/capacities.

CS Conduit shall be installed by the Contractor as per the requirements stipulated in the Tender at the River/ Major Water Crossings.

10.0 BACKFILLING AND BANK PROTECTION

10.1 BACKFILLING

Backfilling of the water-crossing section shall be performed as described in the following clauses.

The bottom of the water way shall be reinstated to its original level by backfilling the trench in a manner and with suitable material and as prescribed and approved by the Authorities and Company. In case material other than the original spoil is required, this shall be supplied by Contractor.

Copyright VCS Quality Services Private Limited – All rights reserved

Wherever boulders, rock; gravel and other hard objects are encountered, they shall not be placed directly on the pipe.

Sufficient soft earth, sand or selected and approved back fill material shall be backfilled initially around and over the pipe to provide a protective padding or cushion extending to a minimum thickness of 0.5 m around the pipe before backfilling remainder of the trench with excavated or other material.

Wherever required by Company, Contractor shall cover the nearly backfilled trench with a layer of rock boulders to be approved by Company over a width equal to the width of excavated trench with an extra of 5m on either side at no extra cost to Company.

Backfilling progress of the trench shall be checked continuously and a daily progress report shall be made in three-fold and handed over to Company.

All embankments and/or dikes, bed and banks shall be reinstated to their original state and levels, unless otherwise prescribed in the drawings or by the competent Authorities or Company.

All remaining spoil-deposits shall be cleaned by Contractor to the satisfaction of Company.

10.2 BANK PROTECTION

a. Trenches in banks of major water crossing shall be backfilled with soil approved by Company. The fill at the banks shall be compacted firmly and reinforced with sacked earth, rip-rap, or by other means as directed by Company to the satisfaction of Authorities having jurisdiction thereof. In areas where the backfilled soil is expected to be of loose type, which is prone to flow, the trench shall be backfilled with crushed rock of size approved by Company

   and pipe shall be provided with adequate padding of soil of a quantity approved by Company. Slope breakers if required shall be provided in both the banks. After the trench has been backfilled and during the cleanup works, the water crossing shall be cleaned across the whole width of RoU.

b. Unless stipulated otherwise by the Authority or by Company, Contractor shall protect the banks of the major water crossings by using gravel and boulders filled embankment mattresses of galvanized iron wire to be laid over the backfilled, compacted and graded banks. In case slope of the banks is 1:1 or more, bank protection shall be carried out using gabions. Bank protection works shall be carried out by Contractor in accordance with the relevant drawings. All materials required for such works shall be supplied by Contractor and all works carried out in accordance with specifications, approved drawings,

Copyright VCS Quality Services Private Limited – All rights reserved

instructions of Company and to the complete satisfaction of Authorities having jurisdiction at no extra cost to Company.

c. The width of the above protection shall be equal to the width of trench excavated and damage and further extending 10 m on either side. The width of the restoration on the slope shall be determined by the levels.

d. Length of Bank protection shall be as per standard.

e. Before post installation hydrostatic testing, Contractor shall "prove" the Diameter of the pipeline by passing a gauging pig 95% of ID through the pipeline. The gauging pig shall be capable of locating and detecting defects permitted by governing code. Contractor shall supply and install all temporary test headers and other equipment, piping materials and other consumables for the purpose.

11 POST-INSTALLATION HYDROSTATIC TEST

The test pressure shall be same as adopted during pre-testing. The combined equivalent stress in the pipeline due to bending, static head and test pressure shall not exceed 95% of the SMYS of the pipe material. After temperature stabilization, pressure shall be retained in the pipeline for a minimum 24 hours and recorded by manothermograph. The hydrostatic testing shall be carried out in accordance with approved procedures.

12 POST-CONSTRUCTION SURVEY

After laying of the pipeline, Contractor shall carry out a post-construction survey jointly with Company. Any defects brought to the notice of Contractor shall be promptly corrected by Contractor at his own expense to the complete satisfaction of Company.

13 FINAL CLEAN-UP

After completion of construction, Contractor shall clear the site of all balance material and debris. All balance pipe lengths, in case supplied by company, shall be returned to Company's designated stock yard(s). Site shall be cleared to the complete satisfaction of Company and Authorities having jurisdiction. All such works shall be done at no extra cost to Company.

Copyright VCS Quality Services Private Limited – All rights reserved

14 DOCUMENTATION

In addition to the documents specified elsewhere in this specification, Contractor shall submit to the Company six copies of leach of the following documents/records.

i. Pipe book of the crossing.

ii. Copies of the permits obtained from Authorities having jurisdiction for the various works.

iii. Clearance certificates from the land owners and Authorities having jurisdiction regarding satisfactory clean-up and restoration of pipeline ROU and work areas.

iv. Pre and post installation Hydrotest Report.

v. True profile of the bed and banks of water crossing along the pipeline after backfilling

vi. True profile of the pipeline as installed and depth of cover at top of pipe at 10 m interval.

vii. Location and angle of sag bends and over bends.

viii. Cross section along the pipeline indicating nature and extent of backfill materials, thickness of concrete coating to pipe etc.

ix. Method and extent of bank protection.

Copyright VCS Quality Services Private Limited – All rights reserved

ENERGISING QUALITY

VCS QUALITY SERVICES PVT. LTD.

STANDARD SPECIFICATION

FOR

HIGH FREQUENCY WELDED LINE PIPE

VPC – SS – PP – 2008

Rev. No	Date	Prepared By	Checked By	Approved By	Authorized By
02	24.02.2022	SR	MC	HK	GW

UNCONTROLLED COPY	:	**If printed**
CONTROLLED COPY	:	**If in soft and signed**

Copyright VCS Quality Services Private Limited – All rights reserved

REVISION RECORD						
Rev.	**Revision Date**	**Prepared by**	**Checked by**	**Approved by**	**Authorized by**	**Revision Description**
00	27.05.2019					Issued as Standard Specification
		BS	MC	AD	SK	
01	28.01.2020					Document formatting, numbering updated from SS-PL-038 to VPC-PP-SS-2008 other detail update as marked
		MB	MC	AD	SK	
02	24.02.2022					VCS QMS Integration
		SR	MC	HK	GW	

Copyright VCS Quality Services Private Limited – All rights reserved

CONTENTS

1. SCOPE 4

3. NORMATIVE REFERENCES 4

6. PIPE GRADE, STEEL GRADE AND DELIVERY CONDITION 4

8 MANUFACTURING 5

9 ACCEPTANCE CRITERIA 6

10 INSPECTION 12

11 MARKING 18

12 COATINGS AND THREAD PROTECTORS 18

13 RETENTION OF RECORDS 18

14 PRODUCTION REPORT 18

15 INSPECTION OF FIELD TESTS & WARRANTY 19

Copyright VCS Quality Services Private Limited – All rights reserved

1. SCOPE

1.1 Coverage

This specification establishes the minimum requirements for the manufacture of high frequency welded steel line pipe in accordance with the requirements of API (American Petroleum Institute) Specification 5L, Forty-Sixth Edition, April 2018 and makes restrictive amendments to API Specification 5L. Unless modified and/or deleted by this specification, the requirements of API Specification 5L shall remain applicable.

The sections, paragraphs and annexes contained herein have the same numbering as that of API Spec 5L in order to facilitate reference. Additional requirements, which are not specified in API Spec 5L, have also been numbered and marked as "(New)".

The coverage by this specification is limited to line pipe to be used in onshore pipelines transporting non-sour hydrocarbons in liquid or gaseous phase. The product specification level for line pipe to be supplied as per this specification shall be "PSL 2".

1.2 Application of The API Monogram

The Manufacturer shall have a valid license to use API Monogram and line pipes supplied as per this specification shall bear API monogram in accordance with the requirements of Annex A of API Specification 5L, Forty—Sixth Edition, April 2018 for Product Specification Level PSL 2.

1.3 (New) Pipe Size

This Specification shall be applied to line pipe of size 4.5" (114.3 mm) OD thru 20" (508.0 mm) OD (both sizes included).

2. NORMATIVE REFERENCES

The latest edition (edition in force at the time of issue of enquiry) of following additional references are included in this specification:

ASTM E112-12: Standard Test Methods for Determining Average Grain size

6. PIPE GRADE, STEEL GRADE AND DELIVERY CONDITION

6.1 Pipe Grade and Steel Grade

6.1.2 Line pipe supplied to this specification shall conform to Product Specification Level 2 (PSL2) as given in Table 1 of this specification and consists of an alpha or alphanumeric designation that identifies the strength level of the pipe. The steel name (designating a steel grade), linked to the chemical composition of the steel, additionally includes a suffix that consists of a single letter (M) that identifies the delivery condition as per Table 3 of this specification.

Table 1 of API Spec 5L stands replaced by Table 1 of this specification.

Table 1- Pipe grades, steel grades and acceptable delivery conditions

PSL	Delivery Condition	Pipe grade/ steel grade [a, b].
PSL -2	Thermomechanical rolled	BM, X42M, X46M, X52M, X56M, X60M, X65M & X70M
a Deleted b The suffix (M) for PSL 2 grades belongs to steel grade		

Copyright VCS Quality Services Private Limited – All rights reserved

6.2 **Delivery condition**

6.2.2 The delivery condition for starting material shall be in accordance with Table 1 of this specification.

8 MANUFACTURING

8.1 Process of Manufacture

Pipe furnished to this specification shall be manufactured in accordance with the applicable requirements and limitations given in Table 2 of API Spec 5L and Table 3 of this specification.

Table 3 of API Spec 5L stands replaced by Table 3 of this specification.

Table 3 - Acceptable manufacturing routes for PSL 2 pipe

Type of Pipe	Starting Material	Pipe forming	Pipe Heat treatment	Delivery condition
HFW	Thermomechanical-rolled coil	Cold forming	Heat treating [a] of weld area only	M
a See clause 8.8 of this specification for applicable heat treatment				

High frequency electric welding shall be performed with a minimum welding current frequency of 200 kHz. The welding system shall have an integrated control in which following data as a minimum shall be monitored:

- Welding Temperature
- Welding speed
- Current and Voltage

Abutting edges of the coil shall be milled or machined immediately before welding. The width of the coil shall be continuously monitored.

8.3 **Starting Material**

8.3.2 Line pipe furnished to this specification shall be made from steel produced in basic oxygen or electric arc furnace and cast by continuous casting only.

8.3.3 The steel used for manufacture of pipe shall be fully killed and fine grained with ASTM grain size number 7 or finer as per ASTM E 112.

8.8 **Treatment of Weld Seams In EW And LW Pipes**

8.8.2 **LW pipe and PSL 2 HFW pipe**

The weld seam and the entire Heat Affected Zone (HAZ) shall be heat treated so as to simulate a normalizing heat treatment in order to control the grain structure so that no untempered martensite remains in the weld seam and the HAZ, and the mechanical properties of heat treated zone approximate that of the parent metal.

Heat treatment temperature of the weld seam and the entire HAZ shall be continuously measured and recorded.

Copyright VCS Quality Services Private Limited – All rights reserved

8.9 **Cold Sizing and Cold Expansion**

8.9.1 Pipes furnished to this specification shall be non-expanded.

8.11 **Jointers**

8.11.1 Jointers on pipes are not permitted.

9 ACCEPTANCE CRITERIA

9.2 CHEMICAL COMPOSITION

9.2.2 For pipes supplied as per this specification, the chemical composition of each heat of steel on product analysis shall be as given in Table 5 of this specification.

Table 5 of API Spec 5L stands replaced by Table 5 of this specification.

Table 5 - Chemical composition for pipe

Element	Mass fraction based upon heat and product analyses (%)	
C [b]	0.16	max. (For Grade BM to X56M)
	0.12[f]	max. (For Grade X60M to X70M)
Si	0.15 [m(new)]	min.
	0.45	max.
Mn [b]	1.20	max. (For Grade BM to X46M)
	1.40	max. (For Grade X52M & X56M)
	1.60	max. (For Grade X60M & X65M)
	1.70	max. (For Grade X70M)
P	0.020	max.
S	0.015	max.
V	0.05	max. (For Grade BM to X46M)
	[d]	max. (For Grade X52M to X70M)
Nb	0.05	max. (For Grade BM to X46M)
	[d]	max. (For Grade X52M to X70M)
Ti	0.04	max. (For Grade BM to X46M)
	[d]	max. (For Grade X52M to X70M)
Al [n (new)]	0.02 [o(new)]	min.
	0.07	max.
Cr	0.20	max.
Mo	0.10	max. (For Grade BM to X65M)
	0.20	max. (For Grade X70M)
Cu	0.35	max.
Ni	0.20	max.
N [n (new)]	0.012	max.
B	0.0005	max.
a Based upon product analysis as per clause 9.2.4 and 9.2.5 of API Spec 5L, the CE_{Pcm}		

Copyright VCS Quality Services Private Limited – All rights reserved

limits apply if C =< 0.12% and CE_{IIW} limits apply if C > 0.12%. For pipes of all grades, sizes and wall thicknesses, Carbon Equivalent shall comply with the following limits:

CE_{Pcm} =< 0.20 %

CE_{IIW} =< 0.40%

Boron content shall be considered in CE_{Pcm} formula even if it is less than 0.0005%.

b Deleted

c Deleted

d Nb + V + Ti = < 0.15%

e Deleted

f Deleted

g Deleted

h Deleted.

I Deleted

j Deleted

k Deleted

l Deleted

(New)m : Minimum for Si is not applicable for AI killed steel.

(New)n : AI/N shall be minimum 2 (not applicable to titanium-killed steel or titanium-treated steel).

(New)o : Applicable for AI killed steel.

9.2.3 For heat analysis and product analysis, all the elements listed in Table 5 of this specification shall be analysed and reported, even if those are not purposely added but are present as residuals only.

If alloying elements other than those specified in Table 5 of this specification are added to the steel, the limits of the additional components shall be agreed with the Purchaser.

9.3 **TENSILE PROPERTIES**

9.3.2 The finished pipe (after all heat treatment & sizing operations) shall conform to the requirements of Table 7 of API Spec 5L and as modified herein.

The actual yield strength shall be as close as possible to the specified minimum yield strength (SMYS) but in no case it shall exceed the limits specified here under:

API Spec 5L Grade	Permissible in excess of SMYS, MPa (psi)
Up to and including X46M	131 (19,000)
X52M to X60M	125 (18,000)
X65M to X70M	120 (17,400)

The ratio of body yield strength and body tensile strength of each test pipe on which yield strength and ultimate tensile strength are determined, shall not exceed 0.90.

The tensile strength of the weld (after heat treatment of the weld seam) shall be equal to or higher than the specified minimum tensile strength of the base metal.

Copyright VCS Quality Services Private Limited – All rights reserved

The minimum elongation of base metal shall be determined in accordance with the formula given in foot note (f) of Table 7 of API Spec 5L, however, minimum elongation in no case shall be less than 20%.

9.6 **Flattening Test**

Acceptance criteria for flattening tests shall be as follows:

a) For HFW pipe of grade ≥ X60 and t ≥ 12.7 mm, there shall be no opening of the weld before the distance between the plates is less than 66% of the original outside diameter. For all other combinations of pipe grade and specified wall thickness, there shall be no cracks or breaks in either weld or parent metal before the distance between the plates is less than 50% of the original outside diameter. Dye penetrant testing shall be used to positively confirm the presence of crack, break or opening.

b) For HFW pipe with a D / t> 10, there shall be no cracks or breaks other than in the weld before the distance between the plates is less than 33% of the original outside diameter.

c) For all pipes, there shall be no evidence of lamination or burnt metal during the entire test before opposite walls of the pipe meet.

Note: The weld extends to a distance of 13 mm on each side of the weld line. The original outside diameter is the specified outside diameter.

9.8 **Cvn Impact Test For PSL 2 Pipe**

9.8.1 **General**

9.8.1.2 From the set of three Charpy V-notch impact test pieces, only one is allowed to be below the specified average absorbed energy value and shall meet the minimum single absorbed energy value requirement as specified in Table 8 of this specification.

9.8.2 **Pipe body tests**

9.8.2.1 The average (set of three test pieces) absorbed energy value (KvT) for each pipe body test shall be as specified in Table 8 of this specification, based upon full sized test pieces at a test temperature of 0°C(32°F) or at a lower test temperature as specified in the Purchase Order/ Material Requisition/Data sheets.

Table 8 of API Spec 5L stands replaced by Table 8 of this specification.

Table 8 - CVN absorbed energy requirements

for pipe body, weld and HAZ of PSL 2 pipe

Pipe Grade	**Full-size CVN absorbed energy (KvT) [a.b] [J]**	
	Average	Minimum
BM	40	32
X42M	40	32
X46M	40	32
X52M	40	32
X56M	40	32
X60M	42	34
X65M	45	36
X70M	50	40

a. The required KvL (longitudinal direction test pieces) values shall be 50% higher than the required KvT values.
b. Testing shall be performed at a test temperature of 0° C (32°F) or at a lower temperature as specified in the Purchase Order /Material Requisition/Data sheets..

Copyright VCS Quality Services Private Limited – All rights reserved

9.8.2.2 The minimum average (set of three test pieces) shear fracture area shall be at least 85 % with one minimum value of 75%, based at a test temperature of 0 °C (32 ^{0}F) or at a lower test temperature as specified in the Purchase Order/ Material Requisition/Data sheets.

9.8.3 **Pipe weld and HAZ tests**

The average (set of three test pieces) absorbed energy value (Kv1) for each pipe weld and HAZ test shall be as specified in Table 8 of this specification, based upon full-size test pieces at a test temperature of 0°C (32°F) or at a lower test temperature as specified in the Purchase Order/ Material Requisition/Data sheets

9.10 **Surface Conditions, Imperfections and Defects**

9.10.1 **General**

9.10.1.2 All pipes shall be free from cracks, sweats, leaks and slivers. Pipe containing such defects shall be treated in accordance with clause C.3 b) or c) of API Spec 5L.

9.10.3 **Arc burns**

9.10.3.2 Arc bums shall be treated in accordance with clause C.3 b) or c) of API Spec 5L. As a reference method for confirming the existence of an arc bum, the area shall be buffed with wire brush or sanding disc and etched with 10% solution of ammonium per sulfate or a 5% solution of nital.

However, arc bums can be considered for acceptance, in case the same is re-crystallized by seam heat treatment. In such case, the Manufacturer shall demonstrate the re-crystallization to Purchaser by taking a sample as per clause 10.2.3.8 (New) of this specification.

9.10.4 **Laminations**

Any lamination or inclusion either extending into the face or bevel of the pipe or present within 50 mm from pipe ends shall be classified as defect. Pipes that contain such defects shall be rejected or cut back until no lamination or inclusion is present at the pipe ends and shall be treated in accordance with clause C.3 b) or c) of API Spec 5L.

9.10.5 **Geometric deviations**

9.10.5.2 For dents, the length in any direction shall be ≤0.5 D and the depth, measured as the gap between the extreme point of the dent and the prolongation of the normal contour of the pipe, shall not exceed the following:

a) 3.2 mm for cold-formed dents with sharp-bottom gouges and not encroaching upon the specified minimum wall thickness

b) 6.4 mm for other dents

c) 1 mm at the pipe ends, i.e. within a length of 100 mm at each of the pipe ends.

d) Any dent on weld and heat affected zone (HAZ).

Dents that exceed the above specified limits shall be considered as defect and shall be treated in accordance with clause C.3 b) or c) of API Spec 5L. Acceptable cold-formed dents with sharp-bottom gouges shall be treated in accordance with clause C.2 of API Spec 5L & as modified in this specification.

9.10.6 **Hard Spots**

Copyright VCS Quality Services Private Limited – All rights reserved

Any hard spot larger than 50 mm (2.0 in) in any direction and hardness greater than $248HV_{10}$ shall be classified as defect and treated in accordance with clause C.3 b) or C.3 c) of API Spec 5L.

9.10.7 **Other surface imperfection**

Other surface imperfections found by visual inspection or non-destructive inspection shall be investigated, classified and treated as follows:

a) Imperfections that have a depth =< 0.05 t and do not encroach on the minimum specified wall thickness shall be classified as acceptable imperfections and shall be treated in accordance with Clause C.1 of this specification.

b) Imperfections that have a depth > 0.05 t and do not encroach on the minimum specified wall thickness shall be classified as defects, and shall be dressed-out by grinding in accordance with Clause C.2 of API Spec 5L and as modified in this specification or shall be treated in accordance with clause C.3 b) or c) of API Spec 5L.

c) Imperfections that encroach on the minimum specified wall thickness shall be classified as defects and treated in accordance with clause C.3 b) or c) of API Spec 5L.

9.11 **Dimensions, Mass and Tolerances**

9.11.3 **Tolerances for diameter, wall thickness, length and straightness**

9.11.3.1 The diameter and out-of-roundness shall be within the tolerances given in Table 10 of this specification.

Table 10 of API Spec 5L stands replaced by Table 10 of this specification.

Table 10 - Tolerances for diameter and out-of-roundness

Specified outside Diameter (D) mm (inch)	Diameter tolerances [d]		Out-of-roundness [e (new)]	
	Pipe except the end [a]	Pipe end [a,c]	Pipe except the end [a]	Pipe end [a,c]
D ≤168.3 (6 5/8)	± 0.0075 D	-0.4 mm to + 1.6mm	0.020D	0.015 D up to a maximum of2.0mm
168.3 (6 5/8) < D ≤ 273.1 (10 3/4)	± 0.0075 D	±0.005 D	0.020D	2.0mm
D > 273.1 (10 3/4)	± 0.0075 D up to a maximum of ±3.0mm	± 1.6mm	0.020D	3.0mm

a The pipe end includes a length of 100 mm at each of the pipe extremities.
b Deleted
c The diameter tolerance and out-of-roundness tolerance shall apply on inside diameter. The inside diameter, based on circumferential measurement, shall be calculated as ID = (D – 2t).
d For determining compliance to the diameter tolerances, the pipe diameter is defined as the circumference of the pipe in any circumferential plane divided by Pi (π).
e (New) Out-of-roundness tolerances apply to maximum and minimum diameters as measured with bar gage, caliper, or device measuring actual, maximum and minimum diameters.

9.11.3.2 In addition to API requirements, the wall thickness of each pipe shall be checked along the circumference at both ends and at the mid location of pipe body at 12 0' clock, 3 0' clock, 6

Copyright VCS Quality Services Private Limited – All rights reserved

0' clock and 9 0' clock positions. The tolerances for wall thickness shall be as given in Table 11 of this specification.

Table 11 of API Spec 5L stands replaced by Table 11 of this specification.

Table 11- Tolerances for wall thickness

Wall thickness (mm)	Tolerances c, d (mm)
t < 15.0 mm	+0.20 t -0.0t
t ≥ 15.0 mm	+3.0 mm -0.0 mm
a Deleted b Deleted c The + ve tolerance for wall thickness does not apply to the weld area. d See 9.13.2 of API Spec 5L and as modified herein for additional restrictions.	

9.11.3.3 All pipes shall be supplied with length between 11.5 m and 12.5 m. However pipe with length between 10.0 m and 11.5 m can also be accepted for a maximum of 5% of the ordered quantity. The minimum average length of the entire ordered quantity in any case shall be 12.0 m. Overall length tolerance shall be (-) Zero and (+) One pipe length to complete the ordered quantity. Table 12 of API Spec 5L stands deleted.

9.11.3.4 The tolerances for straightness shall be as follows:

a) The total deviation from a straight line over the entire pipe length, as depicted in Figure 1 of API Spec 5L shall not exceed 12 mm.

b) The local deviation from straight line, as depicted in Figure 2 of API Spec 5L, in 1.0 m (3.0 ft) portion at each pipe end shall be ≤ 3.0 mm (0.120 in),

9.12 **Finish of Pipe Ends**

9.12.5 **Plain ends**

9.12.5.6

(New) During removal of inside burrs at the pipe ends, care shall be taken not to remove excess metal and not to form an inside cavity on bevel. Removal of excess metal beyond the minimum wall thickness as indicated in clause 9.11.3.2 of this specification shall be a cause for re-bevelling. In case root face of bevel is less than that specified, the pipe ends shall be re-bevelled and rectification by filing or grinding shall not be done.

9.12.5.7

(New) **Bevel Protectors**

Both pipe ends of each pipe shall be provided with metallic or high impact plastic bevel protectors as per Manufacturer's standard. Bevel protectors shall be of a design such that they can be re-used by coating applicator for providing on externally anti-corrosion coated pipes subsequent to coating of line pipe.

Copyright VCS Quality Services Private Limited – All rights reserved

9.16

(New) **Reverse Bend Test**

All pipes shall meet the minimum acceptance criteria for Reverse Bend Test as follows:

A specimen which fractures completely prior to the engagement of mandrel and specimen as specified in clause 10.2.4.9 (New) of this specification, or which reveals cracks or ruptures in the weld or heat affected zone longer than 4 mm shall be rejected. Cracks less than 6 mm long at the edges of the specimen shall not be cause for rejection. Dye penetrant testing shall be used to positively confirm cracks or openings.

10 INSPECTION

10.1 Types of Inspection and Inspection Documents

10.1.3 Inspection documents for PSL 2 pipes

10.1.3.1 Inspection certificate 3.2 in accordance with EN 10204 shall be issued for each dispatched pipe by Purchaser's authorized representative.

10.2 Specific Inspection

10.2.1 Inspection frequency

10.2.1.2 For PSL 2 pipe, the inspection frequency shall be as given in Table 18 of this specification.

Table 18 of API Spec 5L stands replaced by Table 18 of this specification.

Table 18 - Inspection frequency of pipe

Sl. no.	Type of inspection	Frequency of inspection
1	Heat analysis [a]	One analysis per heat of steel
2	Product analysis [b]	Two pipes per lot (maximum 100 pipes) per heat
3	Tensile testing of the pipe body	Two pipes per test unit of not more than 100 pipes per heat
4	Tensile testing of the longitudinal weld seam of pipe [c]	Two pipes per test unit of not more 100 pipes per heat
5	CVN impact testing of the pipe body	Once per test unit of not more than 50 pipes
6	CVN impact testing of the weld and HAZ of pipe	Once per test unit of not more than 50 pipes
7	Flattening test of pipe	As shown in Figure 6 a) of API Spec 5L
8	Reverse Bend Test (New)	Same as Figure 6 a) of API Spec 5L
9	Hardness testing	Any hard spot exceeding 50 mm (2.0 in) in any direction

Copyright VCS Quality Services Private Limited – All rights reserved

10	Hydrostatic testing	Each pipe
11	Weighing of pipe	Each pipe shall be measured and recorded
12	Wall thickness measurement [d]	Each pipe
13	Pipe diameter and out-of roundness [d]	Each pipe
14	Length	Each length of pipe shall be measured and recorded
15	Straightness [d]	Each pipe
16	Tolerances for the weld seam [d] a) Radial offset of coil edges b) Height of flash and c) Depth of groove after trimming of inside flash	Each pipe
17	Visual inspection	Each pipe
18	Metallographic testing (including Vicker's hardness test) of the longitudinal seam weld of pipe as defined in clause 10.2.5 of this specification	At least one finished pipe from each lot of 50 pipes per heat or at least once per operating shift (12 hrs max.) whichever is occurring more frequently and whenever changes of grade, diameter or wall thickness are made and whenever significant excursions from operating heat treatment conditions are encountered and at the beginning of the production of each combination of specified outside diameter and specified wall thickness.
19	Other dimensional testing	Random testing, with the details left to the discretion of the manufacturer
20	Non-destructive inspection	In accordance with Annex E of API Spec 5L and as modified herein

a Where the steel mill is not a part of an integrated pipe mill, heat analysis shall be reported by the Manufacturer prior to start of pipe production.

b Pipes selected shall be such that one at the beginning of the heat and one at the end of the heat are also represented.

c Pipe produced by each welding machine shall be tested at least once per week.

d Measurement shall be recorded at least 3 times per operating shift (12 hrs maximum).

e "Test unit" is as defined in clause 3.1.60 of API Spec 5L.

Copyright VCS Quality Services Private Limited – All rights reserved

10.2.2 **Samples and test pieces for product analysis**

Samples shall be taken, and test pieces prepared, in accordance with ISO 14284 or ASTM E1806. Samples used for product analysis shall be taken from finished pipes only.

Samples for product analysis from coil may be used provided the traceability of samples is guaranteed.

10.2.3 **Samples and test pieces for mechanical tests**

10.2.3.1 General

In addition to API Spec 5L requirements, samples and test pieces for various types of tests shall be taken from Figure 5 b) and Figure 6 a) of API Spec 5L and Figure 10.2.4.9.1 & 10.2.5.3 of this specification, whichever is applicable, and as given in Table 20 of this specification.

Table 20 of API Spec 5L stands replaced by Table 20 of this specification.

Sample Location	**Type of test**	**Number, Orientation and location of test pieces per sample [a]**	
		Specified outside diameter, D mm (in)	
		< 219.1 mm (8.625 in)	≥219.1 mm (8.625 in)
Pipe body	Tensile	1 L90	1T180
	CVN	3T90	3T90
Seam Weld	Tensile	---	IW[b]
	CVN	3W and 3HAZ	3W and 3HAZ
	Hardness	1W (As shown in figure 10.2.5.3 of this specification)	
Pipe body and weld	Flattening	As shown in figure 6 a) of API Spec 5L	
	Reverse Bend	As shown in figure 10.2.4.9.1 of this specification	

a See figure 5 (b) of API Spec 5L for an explanation of the symbols used to designate orientation and location.

b Test specimen shall be tested for ultimate tensile strength only.

10.2.3.2 Test pieces for the tensile test

Rectangular test pieces, representing the full wall thickness of the pipe, shall be taken in accordance with ASTM A370 and as shown in Figure 5 b) of API Spec 5L.

Copyright VCS Quality Services Private Limited – All rights reserved

Longitudinal tensile tests for pipe body with specified outside diameter, D < 219.1 mm (8.625 inch) shall be carried out on a strip specimen representing full wall thickness of the pipe prepared according to ASTM A370.

Transverse tensile test for pipe body with specified outside diameter, D ≥ 219.1 mm (8.625 inch) shall be carried out on flattened rectangular test pieces.

For tensile test piece, both inside and outside flash of weld in excess of pipe wall thickness shall be removed from the test piece either by grinding or machining.

10.2.3.3 **Test pieces for the CVN impact test**

In addition to the API Spec 5L requirements, following shall also be applicable:

The test pieces shall be prepared in accordance with ASTM A370. Non-flattened test pieces shall be used. The axis of the notch shall be perpendicular to the pipe surface.

Charpy V-notch impact testing shall be performed on full-sized test pieces. However, if preparation of full size test piece is not possible, then standard sub-sized test pieces shall be prepared as per ASTM A370.

Lower pipe sizes wherein preparation of transverse sub-sized specimen is not possible, CVN impact testing shall be carried out on longitudinal test specimen [see Note 'a' of Table 8 of this specification].

10.2.3.7 **Test pieces for flattening test**

The test pieces shall be prepared in accordance with ISO 8492. The length of each test piece shall be >= 60 mm.

Minor surface imperfections may be removed by grinding.

10.2.3.8 **Test pieces for Macro graphic and metallographic tests**

(New) Test piece for metallographic testing shall be taken transverse to the longitudinal weld seam as indicated in Figure 10.2.5.3 of this specification. The test piece shall be suitably ground, polished and etched to reveal the macro-structure.

10.2.3.9 **Test pieces for Reverse bend test**

(New) Ring specimen of width between 100 mm to 115 mm shall be taken from the pipe. Reverse bend test shall be carried out as per clause 10.2.4.9 (New) of this specification.

10.2.4 **Test methods**

10.2.4.3 CVN impact test

The Charpy test shall be carried out in accordance with ASTM A370.

10.2.4.7 **Flattening test**

In addition to the API Spec 5L requirements, following shall also be applicable:

The flattening test shall be carried out in accordance with ISO 8492.

10.2.4.9 **Reverse bend test**

Copyright VCS Quality Services Private Limited – All rights reserved

(New) The mandrel shall be plunged into the test piece prepared in accordance with clause 10.2.3.9 (New) of this specification, with the weld in contact with the mandrel, to such a depth that the angle of engagement between mandrel and specimen reaches 60° as shown in figure 10.2.4.9.1 of this specification. If the combination of diameter & wall thickness of pipe and radius of mandrel is such that the angle of engagement cannot reach 60°, then the mandrel shall be plunged into the specimen until opposite walls of the specimen meet.

Selection of Mandrel

The reverse bend test shall be carried out with a mandrel, whose radius (R), or width (A) shall be calculated for any combination of diameter, wall thickness and grade with the following formula:

$$A = 2R = \frac{1.4\,(D-t)\,t}{e\,(D-2t) - 1.4t} - t$$

Where,

D - Specified outside diameter of pipe, mm

t - Specified wall thickness of pipe, mm

1.4 - Peaking factor

e - Strain

Minimum value of 'e' shall be as per Table 23 of API Spec 5L reproduced as below:

Table 23 — Strain Values for Guided-bend Test

Pipe grade	Strain value *'e'*
Gr. B	0.1375
X42	0.1375
X46	0.1325
X52	0.1250
X56	0.1175
X60	0.1125
X65	0.1100
X70	0.1025

10.2.5 **Macro graphic and metallographic tests**

10.2.5.3 The test piece shall be visually examined using a minimum 40X magnification to provide evidence that heat treatment of weld zone is adequate and there is no untempered martensite or detrimental oxides from the welding process present along the weld seam. The metallographic examination shall be documented on micrographs (at 10X to 20X magnification). In case imperfections or defects are observed, it will become a cause for re- evaluation of welding parameters and heat treatment as deemed necessary by Purchaser's Representative.

Copyright VCS Quality Services Private Limited – All rights reserved

Vickers hardness tests shall be carried out on each test piece taken for metallographic examination in accordance with ISO 6507-1, at locations indicated in Fig. 10.2.5.3 of this specification. Indentation in the HAZ shall start as close to the fusion line as possible. The resulting Vickers hardness value at any point shall not exceed $248HV_{10}$. The maximum difference in hardness between the base metal and any reading taken on the weld or heat affected zone shall be less than $80HV_{10}$. Modalities of retest shall be in accordance with clause 10.2.12.7 of API Spec 5L.

10.2.6 **Hydrostatic test**

10.2.6.1 Test pressure shall be held for a minimum period of 15 seconds for all sizes and grades of pipes.

10.2.6.2 In addition to the requirements of API Spec 5L, following shall also be applicable:

The pressure gauge used for hydrostatic testing shall have a minimum range of 1.5 times and maximum range of 4 times the test pressure. The test-pressure measuring device shall be calibrated by means of a dead-weight tester only. The test configuration shall permit bleeding of trapped air prior to pressurization of the pipe.

10.2.6.5 The test pressure for all sizes and grades of pipe shall be such that hoop stress (fibre stress) generated is at least 95% of SMYS, computed based on the Equation (6) indicated in clause 10.2.6.5 of API Spec 5L. Table 26 of API Spec 5L stands deleted.

10.2.7 **Visual inspection**

10.2.7.1 Each pipe shall be visually examined for entire external surface and internal surface to the extent feasible and shall be free of defects in finished condition. Visual examination shall be carried out in a sufficiently illuminated area; minimum 1000 1x. If required additional lights shall be used to obtain good contrast and relief effect between imperfections and backgrounds.

10.2.8 **Dimensional testing**

10.2.8.1 Diameter measurements shall be made with a circumferential tape only.

10.2.8.7 The measuring equipment requiring calibration or verification under the provisions of API Spec 5L shall be calibrated with manual instruments at least once per operating shift (12 hours maximum). Such calibration records shall be furnished to Purchaser's Representative on request.

10.2.10 **Non-destructive inspection**

Non-destructive inspection shall be performed in accordance with Annex E of API Spec 5L and as modified herein.

10.2.11 **Reprocessing**

This clause of API Spec 5L stands cancelled.

10.2.12 **Retesting**

10.2.12.1 Recheck analyses

Modalities of recheck analysis shall be as per API Spec 5L as applicable to the lot being tested (see Table 18 of this specification). However, during individual testing, each pipe shall be fully analysed to meet the requirements of Table 5 of this specification.

Copyright VCS Quality Services Private Limited – All rights reserved

10.2.12.9 **Reverse bend retests**

(New) Reverse bend retest provisions shall be same as specified for flattening retests in clause 10.2.12.3 of API Spec 5L.

11 MARKING

11.1 General

11.1.1 Pipe manufactured in accordance with this specification shall be marked by the manufacturer as per the requirements of API Spec 5L and as modified herein. Marking shall be in English language and International System (SI) of Units.

11.1.5 (New) Marking shall also include Purchase Order number, item number, pipe number and heat number.

11.2 Pipe markings

11.2.1 k) (New) Actual length in metres and actual pipe weight in kg shall be marked

11.2.3 c) (New) Paint used for stencil marking shall withstand a temperature (New) up to 250°C expected to be experienced during further external anti-corrosion coating operations of line pipe by coating applicator.

11.2.4 The pipe number shall be placed by cold rolling or low stress dot marking or vibro-etching on the outside surface of the pipe at an approximate distance of 50 mm from both ends. In case of non-availability of either cold rolling or low stress dot marking facility in pipe mill, an alternative marking scheme of a permanent nature may be proposed by the Manufacturer.

11.2.8 A colour code band shall be marked on inside surface of finished pipe for identification of pipes of same diameter but different wall thickness, as indicated in the Purchase Order. The colour code band shall be 50 mm wide and shall be marked at a distance of 150 mm from the pipe ends.

12 COATINGS AND THREAD PROTECTORS

12.1.1 Unless otherwise specified in the Purchase Order, the pipes shall be delivered bare, free of any trace of oil, stain, grease and paint. Varnish coating shall be applied on the marking area.

Bevels shall be free of any coating.

13 RETENTION OF RECORDS

In addition to the records indicated in API Spec 5L, the Manufacturer shall retain the records of all additional tests and calibration records mentioned in this specification including the hard copy records of ultrasonic testing carried out on pipe/coil as well as pipe ends.

15 PRODUCTION REPORT

(New) The Manufacturer shall provide one electronic copy and six hard copies of production report in English language indicating at least the following for each pipe. International system of units (SI) shall be adopted.

- Pipe number

Copyright VCS Quality Services Private Limited – All rights reserved

- Heat number from which pipe is produced
- Pipe length and weight
- Pipe grade

The Manufacturer shall provide one electronic copy and six hard copies of acceptance certificates which shall include the results of all tests required as per this specification and performed on delivered material giving details of, but not limited to, the following:

- All test certificates as per clause 10.1.3 of API Spec 5L and as modified herein.
- Records of qualification of welders and procedures for repair welding.
- Certified reports of dimensional inspection, surface imperfections & defects.
- Data on test failures, rejected heats/lots, etc.
- All other reports and results required as per this specification.

The certificates shall be valid only when signed by the Purchaser's Representative. Only those pipes, which have been certified by the Purchaser's Representative, shall be dispatched from the pipe mill.

In the event of small quantities of pipes supplied against this specification, the production report may consist of only test certificates required as per clause 10.1.3 of API Spec 5L and as modified herein and other test reports/results required as per this specification.

16 INSPECTION OF FIELD TESTS & WARRANTY

(New) Purchaser shall be reimbursed by Manufacturer for any pipe furnished on this order that fails under field hydrostatic test if such failure is caused by a material/ manufacturing defect in the pipe. The reimbursement cost shall include pipe, labour and equipment rental for finding, excavating, cutting out and installation of replaced pipe in position. The field hydrostatic test pressure will not exceed that value which will cause a calculated hoop stress equivalent to 95 percent of specified minimum yield strength.

In case Manufacturer so desires, he will be advised at least two weeks in advance so that his Representative may witness the hydrostatic test in field, however, the testing and leak (if any) finding and repair operation shall not be postponed because of absence of the Manufacturer's Representative.

Copyright VCS Quality Services Private Limited – All rights reserved

Annex B

Manufacturing Procedure Qualification for PSL 2 Pipe

B.1 INTRODUCTION

B.1.1 This annex specifies additional provisions that apply for the PSL 2 pipes ordered as per this specification.

B.1.2 Two lengths each of completely finished pipes from two different heats (i.e. a total of four pipe lengths) shall be selected at random for testing as per clause B.5.1 of this specification to verify that the manufacturing procedure results in the quality of pipes which are in complete compliance with this specification. The pipes thus tested shall be considered to be the test pipes required per heat or per lot as per relevant clauses of this specification.

These manufacturing procedure qualification tests (MPQT) shall be repeated upon any change in the manufacturing procedure as deemed necessary by Purchaser's Representative. The manufacturing procedure qualification tests shall be carried out on pipes for each wall thickness, each diameter and each grade of steel.

B.1.3 Verification of the manufacturing procedure shall be by qualification in accordance with clause B.3, B.4 and B.5 of API Spec 5L and as modified herein.

Note: In the event of small quantities of pipes (i.e. less than 50 numbers) ordered against this specification, like those for bends and other similar applications, as specifically called out in the Purchase Order, the manufacturing procedure qualification test as per clause B.5.1 of this specification shall not be carried out. Pipes in such case shall be accepted based on regular production tests.

B.3 CHARACTERISTICS OF THE MANUFACTURING PROCEDURE SPECIFICATION

Before pipe production commences, Manufacturing Procedure Specification (MPS) for manufacturing of pipes and Statistical process control charts shall be prepared by pipe manufacturer (including all information as per clause B.3 a), b) and e) of API Spec 5L) and submitted for approval of the Purchaser.

B.5 MANUFACTURING PROCEDURE QUALIFICATION TESTS (MPQT)

B.5.1 For the qualification of the manufacturing procedure, all tests & inspections specified in Table 18 and clause B.5.2 of this specification shall be conducted on all the pipes selected for testing as per clause B.1.2 of this specification.

B.5.2 The Manufacturer shall submit to Purchaser a report giving the results of all tests mentioned below. The report shall be agreed and signed by Purchaser's Representative, prior to start of regular production.

The various tests to be conducted on each pipe shall be as follows. The test method and acceptance values shall be as per this specification unless specified differently in this Annex.

a. **Visual Examination**

All pipes shall be examined visually for dimensional tolerances and apparent surface defects.

b. **Ultrasonic Examination**

Copyright VCS Quality Services Private Limited – All rights reserved

The weld seam of all pipes shall be examined ultrasonically by automatic ultrasonic equipment.

c. **Mechanical Properties**

The mechanical properties of all pipes shall be tested and shall meet the requirements of this specification. Purchaser's Representative will select the places in pipe from where the test pieces shall be extracted.

The following tests shall be conducted:

i. Flattening test

Two (2) flattening test pieces shall be extracted; one test piece shall be tested with weld at 0° and other at 90°.

ii. Tensile test

Tensile tests shall be conducted on:

For pipe with specified outside diameter, D < 219.1 mm (8.625 inch):

- Two (2) longitudinal test pieces from base metal

For pipe with specified outside diameter, D ≥ 219.1 mm (8.625 inch):

- Two (2) transverse test pieces from base metal

- Two (2) transverse test pieces from the longitudinal weld seam

iii. Metallographic tests

Six (6) weld cross-section test pieces, three (3) from each end of pipe weld seam shall be taken for metallographic examination. Two of these shall be tested for hardness at room temperature after etching, one from each pipe

iv. CVN impact testing

CVN impact test shall be performed on test pieces extracted as follows:

- Four sets of three (3) transverse test pieces each from base metal

- One set of three (3) transverse test pieces with weld in middle

- One set of three (3) transverse test pieces with HAZ in middle

The minimum average (set of three test pieces) absorbed energy value (KvT) at the test temperature specified in clause 9.8 and Table 8 of this specification shall be complied with for test pieces extracted from base metal, weld and HAZ.

v. Fracture toughness testing

Four (4) sets of CVN base metal test pieces shall be tested at - 40°C, - 10°C, 0°C and + 20° C for shear area and absorbed energy to produce full transition curve. The minimum average (set of three test pieces) shear fracture area at the test temperature specified in clause 9.8 of this specification shall be complied with. For other temperatures, the value shall be for information only.

Copyright VCS Quality Services Private Limited – All rights reserved

Annex C

Treatment of surface imperfections and defects

C.1 TREATMENT OF SURFACE IMPERFECTIONS

Surface imperfection not classified as defect as per this specification shall be cosmetically dressed-out by grinding.

C.2 TREATMENT OF DRESSABLE SURFACE DEFECTS

C.2.3 Complete removal of defects shall be verified by local visual inspection and by suitable non-destructive inspection. To be acceptable, the wall thickness in the ground area shall be in accordance with clause 9.11.3.2 of this specification.

Copyright VCS Quality Services Private Limited – All rights reserved

Annex E

Non-destructive inspection for Pipe

The Purchaser reserves the right to depute its Representative(s) to perform inspection and witness tests in all phases of manufacturing and testing starting from steelmaking to finished line pipe ready for shipment. Manufacturer shall comply with the provisions regarding inspection notice, plant access, compliance and rejection mentioned in the Annex Q (New) of this specification. The Manufacturer shall give the Purchaser reasonable notice of the starting date of normal production and the work schedule. Any action or omission on part of Purchaser's Representative shall not relieve the Manufacturer of his responsibility and obligation to supply material in strict accordance with this specification.

E.1 QUALIFICATION OF PERSONNEL

E.1.1 All personnel performing NDT activities shall be qualified in the technique applied, in accordance with latest edition of ISO 9712, ISO 11484 or ASNT No. ASNT-TC-1A or equivalent

All NDT shall be performed in accordance with written procedures. These procedures shall have prior approval of the Purchaser.

Inspector Qualification

Acceptable qualification for NDT inspectors shall be as specified below:

(i) For UT

For UT, at least one Level III qualified inspector shall be available to the mill for overall supervision. Level III inspectors shall be ASNT Level III or ACCP Professional Level III and certified in applicable method.

A level II inspector is required for shift supervision, manual weld inspection and calibration of all systems (both manual and automated).

(ii) For all other NDT methods

Evaluation of indications Level II & Level III inspector

E.3 METHODS OF INSPECTION

E.3.1 **General**

E.3.1.1 The electric weld of the pipe shall be inspected by ultrasonic methods (Refer Table E.1 of API Spec 5L) for full length (100%) for the entire thickness, using automatic ultrasonic equipment in accordance with clause E.5 of API Spec 5L and as modified in this specification.

E.3.1.3 Location of NDT equipment in the manufacturer's facility shall be such that final inspection of weld seam of pipe shall be performed after hydrostatic testing.

E.3.2 **Pipe End Inspection - Welded Pipe**

E.3.2.1 Pipe ends including weld at the pipe ends not covered by automatic ultrasonic equipment shall be inspected by manual ultrasonic equipment with same sensitivity and capability as

Copyright VCS Quality Services Private Limited – All rights reserved

automatic equipment, or, such non-inspected pipe end shall be cut-off. Records in accordance with E.5.4 of API Spec 5L shall be maintained.

E.3.2.3 Ultrasonic inspection in accordance with the method described in ISO 10893-8 shall be used to verify that the SO mm (2.0 in) wide zone at each pipe end is free of any laminar imperfections in the circumferential direction.

E.3.2.4(New) Bevel face of each pipe end shall be magnetic particle inspected for the detection of laminar imperfections in accordance with ISO 10893-5

E.5 **ULTRASONIC AND ELECTROMAGNETIC INSPECTION**

E.5.1.1 In addition to the API Spec 5L requirements, all automatic ultrasonic equipment shall have an alarm device, which continuously monitors the effectiveness of the coupling. The equipment for the automatic inspection shall allow the localization of both longitudinal and transverse defects corresponding to the signals exceeding the acceptance limits of the reference standard. The equipment shall be fitted with a paint spray or automatic marking device and alarm device for areas giving unacceptable ultrasonic indications. All ultrasonic testing equipment shall be provided with recording device. In addition, an automatic weld tracking system shall be provided for correct positioning of the probes with respect to weld centre.

E.5.2. **Ultrasonic and electromagnetic inspection reference standards**

E.5.2.1 The reference standard (calibration pipe) shall have the same specified diameter and wall thickness as specified for the production pipe being inspected.

E.5.2.2 Reference standards shall be of sufficient length to permit calibration of ultrasonic inspection equipment at the speed to be used in normal production.

The reference standard (calibration pipe) shall also be of the same material, type and have the same surface finish and heat treatment as the pipe being inspected.

E.5.2.3 **Reference standards**

E.5.2.3.1 **Reference standards for pipe weld UT:**

(New) Reference standard shall contain as reference indicators i.e. machined notches as given in

Table E.7 of this specification

Table E.7 of API Spec 5L stands replaced by Table E.7 of this specification.

Table E.7 — Reference Indicators

Item	Reference indicators		
	Number of notches and orientation [a]		Notch Type [b]
	OD	ID	
Weld Seam	1L	1L	N10

a The symbol indicates the orientation of the notch i.e. L = Longitudinal. Reference indicators shall be located as per Figure E.I of this specification.

b Dimensions of Notch type N10 shall be 0.1 t x 50 mm x 1 mm (Depth x maximum Length

Copyright VCS Quality Services Private Limited – All rights reserved

x maximum width), where, 't' is the specified wall thickness. The depth tolerance is ± 15% of the specified notch depth or ± 0.05 mm, whichever is greater.

E.5.2.3.2 Reference standards for coil/ pipe body UT:

(New) Reference standard for the ultrasonic inspection of coil or pipe body (except the coil edges/pipe ends) shall contain continuous machined notch of following dimension:

a) width, w : 8 mm, with a tolerance +0.8/ - 0.0 mm

b) depth, d : 0.25 1< d < 0.5 t, where 't' is the specified wall thickness

Reference standard for the ultrasonic inspection of coil edges (area adjoining weld seam)/ pipe ends shall have 6.4 mm (1/4 inch) diameter FBH of a depth 0.5 t, where 't' is the specified wall thickness.

E.5.3 **Instrument standardization**

E.5.3.2 The instrument shall be calibrated with appropriate reference standard (refer E.5.2 of API Spec 5L and as modified herein) at following intervals:

- Once at the beginning of each operating shift (12 hours maximum).
- Once in between of each operating shift i.e, 3 hrs to 4 hrs after the first
- Every time there is change in probes or working condition of the UT machine.
- Every time the running of the system gives rise to doubts on its efficiency.

If during the above calibration verification, it is found that the equipment has not functioned satisfactorily in the opinion of the Purchaser's Representative, all the pipes or coils already inspected after the previous verification shall be inspected again at Manufacturer's cost.

E.5.5 **Acceptance Limits**

E.5.5.2 For ultrasonic inspection of pipe/coil, any imperfection that produces an imperfection greater than the acceptable limits shall be treated as following:

a) Locations showing indications above the acceptance limits during automatic ultrasonic inspection may be re-examined by manual ultrasonic method. If no defects are located during re-examination, the original findings may be ignored. Additional scanning may be requested by Purchaser's Representative to check questionable areas.

E.5.6 **Disposition of defects found by Ultrasonic and electromagnetic inspection**

Disposition of any imperfection in pipe/coil that produces an indication greater than the acceptable limits as specified in Table E.9 (New) of this specification shall be classified as defect and shall be given disposition as specified in (e) or (f) of E.10 of API Spec 5L.

E.7 **RESIDUAL MAGNETISM**

E.7.2 The longitudinal magnetic field shall be measured on all sizes of pipes. Measurement on pipe in stack shall not be considered valid. Such measurements shall be taken on the root face or square cut face of finished plain-end pipes.

Copyright VCS Quality Services Private Limited – All rights reserved

E.7.3 Measurements shall be made using Hall - effect gaussmeter only.

E.7.4 Measurements shall be made on each end of a pipe for 5% of the pipes produced but at least once per 4 hr per operating shift (12 hrs maximum).

E.7.6 Four readings shall be taken approximately 90° apart around the circumference of each end of the pipe. The average of the four readings shall not exceed 2.0 mT (20 gauss) and no single reading shall exceed 2.5 mT (25 gauss). All residual magnetism measurements shall be recorded.

E.8 LAMINAR IMPERFECTIONS IN THE PIPE BODY OF EW, SAW AND COW PIPE

E.8.1 The coil, except the longitudinal coil edges (area adjoining weld seam), shall be ultrasonically tested for laminations using an oscillating or straight running pattern of probes in accordance with ISO 10893-9 amended as follows:

The distance between adjacent scanning tracks shall be sufficiently small to ensure detection of minimum allowed imperfection size. The minimum coverage during automatic ultrasonic inspection shall be ≥ 20 % of the coil surface uniformly spread over the area.

Acceptance limit for laminar imperfection in the coil, except the longitudinal edges, shall be as per Table E.9 (New) of this specification. Disposition of defects shall be as per clause E.5.6 of this specification.

Table 3 of ISO 10893-9 stands replaced by Table E.9 (New) of this specification.

E.9 LAMIMAR IMPERFECTIONS ALONG THE STRIP/ PLATE EDGES OR PIPE WELD SEAM OF EW, SAW AND COW PIPES

The longitudinal edges of the coil (area adjoining weld seam) shall be 100% ultrasonically inspected in accordance with ISO 10893-9 amended as follows:

UT shall be performed over 25 mm wide zone along each side of the trimmed longitudinal edges of the coil.

Acceptance limit for laminar imperfection in the longitudinal edges of the coil shall be as per Table E.9 (New) of this specification. Disposition of defects shall be as per clause E.5.6 of this specification.

Table 2 of ISO 10893-9 stands replaced by Table E.9 (New) of this specification.

Table E.9 - Acceptance criteria for laminar imperfection in coil/ pipe body (New)

Location	Maximum individual imperfection		Minimum imperfection size considered			Maximum population density[a]
	Area mm^2	Length[b] mm	Area mm^2	Length[b] mm	Width[c] mm	
Coil, except the longitudinal edges	1000	100[d]	300	35	8	10 (per 1.0 m x 1.0m)
Longitudinal edges of the	500	40	----	20	--	4

Copyright VCS Quality Services Private Limited – All rights reserved

coil						(per 1.0 m length)

a Number of imperfections of size smaller than the maximum imperfection size and greater than the minimum imperfection size.

b Length is the dimension at right angles to the scan track.

c Width is the dimension parallel to the scan track.

d Any planar imperfection which is not parallel to the coil surface is not acceptable.

e For an imperfection to be larger than the minimum imperfection size, the minimum area, minimum length and minimum width given for the coil/ pipe body, all have to be exceeded.

E.10 **DISPOSITION OF PIPES CONTAINING DEFECTS**

a) The repaired area shall be 100% rechecked by magnetic particle or ultrasonic inspection to ensure complete removal of defects. However for repair of cosmetic type of defects, MPI may not be conducted if so directed by Purchaser's Representative on case to case basis. The pipes having a thickness less than the minimum allowed in accordance with this specification, after repair by grinding shall be treated for disposition in accordance with (c) or (d) of clause E.10 of API Spec 5L.

E.11 **ROTARY ULTRASONIC INSPECTION OF PIPE (ALTERNATIVE METHOD)**

(New) As an alternative, full pipe may be ultrasonically inspected after welding of longitudinal seam by rotary ultrasonic testing method (pipe in rotating condition) in accordance with ISO 10893-8 amended as follows:

The coverage area during ultrasonic inspection shall be 100 % of the pipe body including weld seam, sides of the weld seam and pipe ends.

The reference standard for the weld seam as per clause E.5.2.3.1 and Table E.7 of this specification shall be used for the rotary ultrasonic testing.

If the manufacturer opts for rotary ultrasonic testing of full pipe in accordance with this clause, then, the requirement for ultrasonic inspection as per clause E.3.1.1, E.3.2.3, E.8 and E.9 of API Spec 5L and as modified herein shall not be applicable.

Copyright VCS Quality Services Private Limited – All rights reserved

Annex G

PSL 2 Pipe with Resistance to Ductile Fracture Propagation

G.1 INTRODUCTION

G.1.1 This annex specifies additional provision that apply for pipes ordered as per this specification.

G.2 ADDITIONAL INFORMATION TO BE SUPPLIED BY THE PURCHASER

G.2.1 CVN minimum average absorbed energy value (based on full-sized test pieces) for each test as per G.3.2 shall be as per table G of this specification for BM, weld and HAZ.

Table G.1, G.2 & G.3 of API specification 5L stands replaced by Table G of this specification.

Table G-CVN Absorbed Energy Requirements for Pipe Body, Weld and HAZ of PSL2 Pipe.

Pipe Grade	Full size CVN Absorbed Energy (K_vT)[a.b {J}]	
	Average	Minimum
BM	40	32
X42M	40	32
X46M	40	32
X52M	40	32
X56M	40	32
X60M	42	34
X65M	45	36
X70M	50	40

a. The required K_VL (Longitudinal direction test pieces) value shall be 50% higher than the required K_VT values.
b. Testing shall be performed at a test temperature of 0˚C (32°F) or at a lower temperature as specified in the purchase order.

Copyright VCS Quality Services Private Limited – All rights reserved

Annex Q (New)

Purchaser Inspection

Q.1 INSPECTION NOTICE

Advance notice shall be given by the manufacturer prior to the start of production to the purchaser to inspect/witness the manufacturing activities including tests.

Q.2 PLANT ACCESS

The inspector representing the purchaser shall have unrestricted access, at all times while work of the contract of the purchaser is being performed, to all parts of the manufacturer's works that will concern the manufacture of the pipe ordered. The manufacturer shall afford the inspector all reasonable facilities to satisfy the inspector that the pipe is being manufactured in accordance with this specification. All inspections should be made at the place of manufacture prior to shipment, unless otherwise specified on the purchase order, and shall be so conducted as not to interfere unnecessarily with the operation of the works.

Q.3 COMPLIANCE

The manufacturer is responsible for complying with all of the provisions of this specification. The purchaser may make any investigation necessary to be satisfied of compliance by the manufacturer and any reject any material that does not comply with this specification.

Q.4 REJECTION

If the Purchaser Representative rejects pipes repeatedly for any recurring cause, this shall be adequate reason to refuse final inspection of subsequent pipes until the cause has been investigated and corrective action taken by the Manufacturer.

Copyright VCS Quality Services Private Limited – All rights reserved

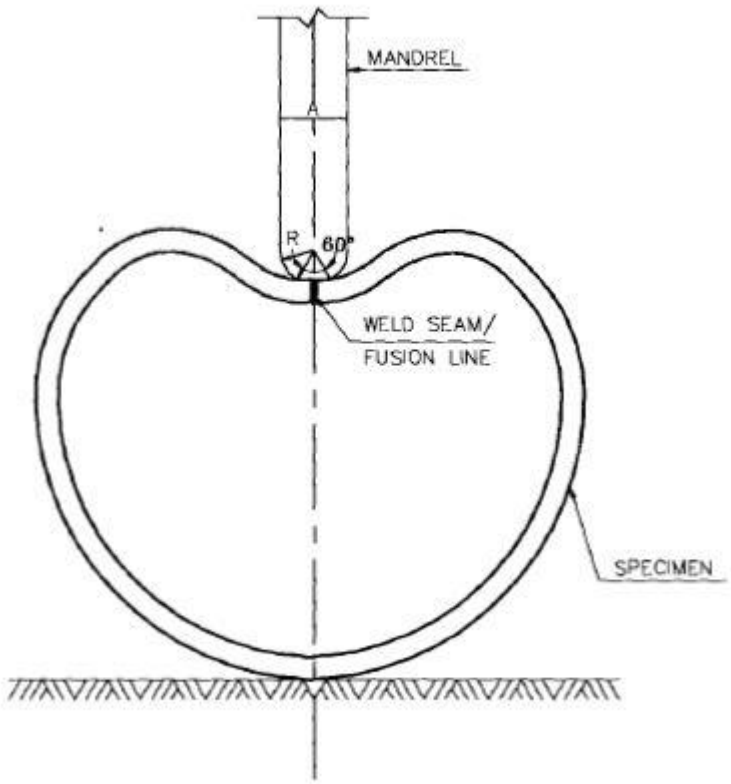

FIGURE: 10.2.4.9.1

REVERSE BEND TEST

Copyright VCS Quality Services Private Limited – All rights reserved

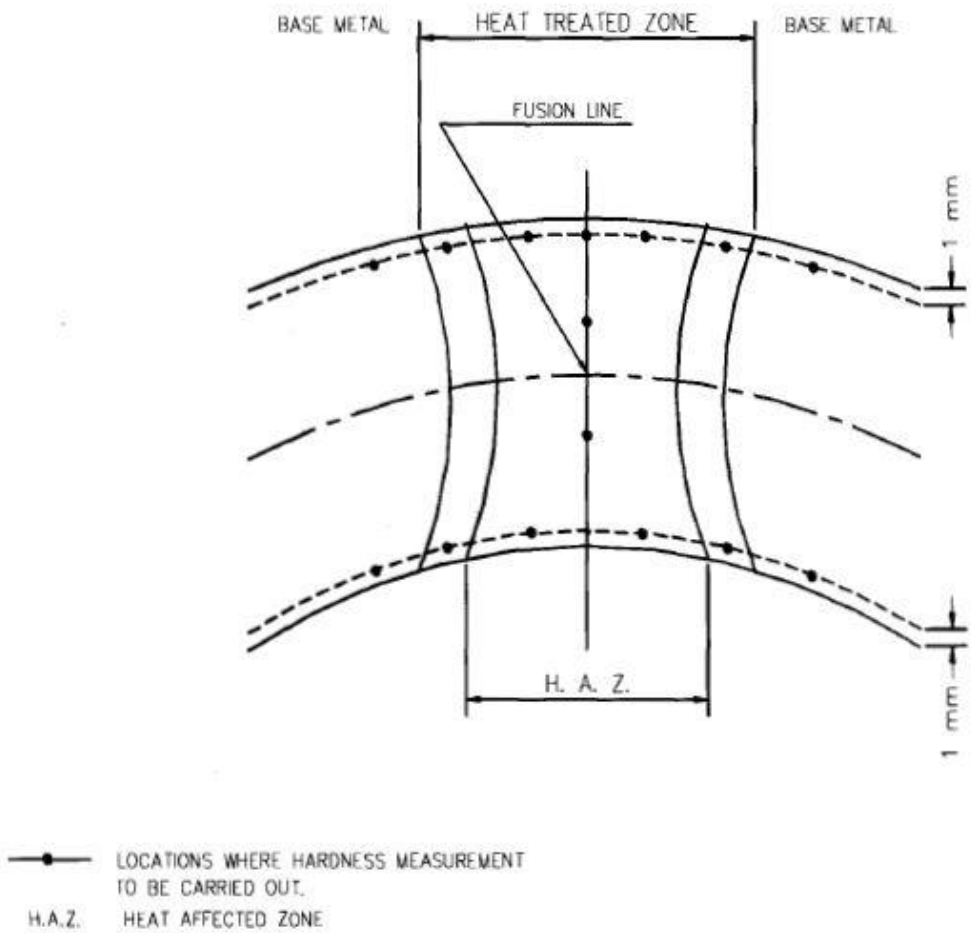

FIGURE: 10.2.5.3

METALLOGRAPHIC SPECIMEN AND LOCATIONS FOR HARDNESS MEASUREMENT

Copyright VCS Quality Services Private Limited – All rights reserved

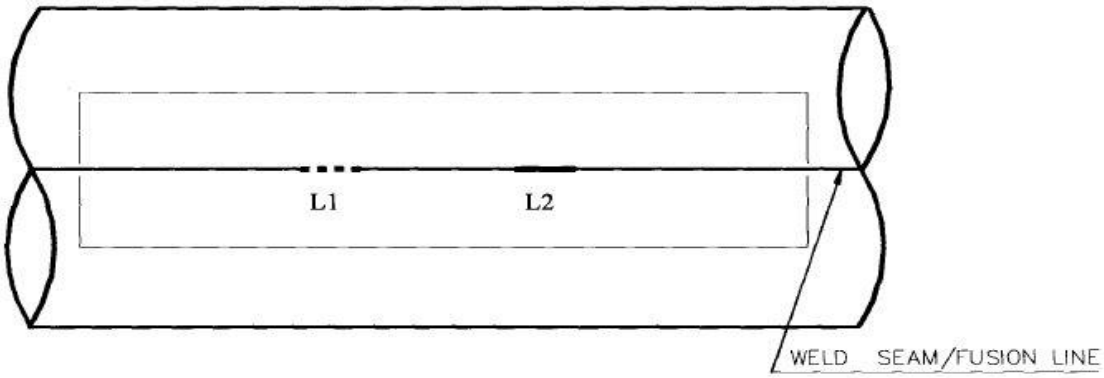

L1	-	Longitudinal inside notch (N10) at weld line
L2	-	Longitudinal outside notch (N10) at weld line

FIGURE: E.1

REFERENCE STANDARD FOR UT OF LONGITUDINAL WELD SEAM

Copyright VCS Quality Services Private Limited – All rights reserved

ENERGISING QUALITY

VCS QUALITY SERVICES PVT. LTD.

STANDARD SPECIFICATION
FOR
CONCRETE WEIGHT COATING OF ONSHORE PIPELINES

VPC – SS – PP - 2010

03	**04.01.2022**	**SR**	**MC**	**HK**	**HK**
Rev. No	**Date**	**Prepared By**	**Checked By**	**Approved By**	**Authorized By**

UNCONTROLLED COPY	:	**If printed**
CONTROLLED COPY	:	**If in soft and signed**

Copyright VCS Quality Services Private Limited – All rights reserved

REVISION RECORD						
Rev.	**Revision Date**	**Prepared by**	**Checked by**	**Approved by**	**Authorized by**	**Revision Description**
00	23.06.2017					Issued as Standard Specification
		AS	SM	AD	SK	
01	21.02.2018					Document formatting, Cover Page, Doc numbering updated from SS-PL-005 to VPC-SS-PL-0005)
		SSS	MC	AD	SK	
02	28.01.2020					Document numbering updated from VPC-SS-PL-0005 to VPC-SS-PP-2010
		MB	MC	AD	SK	
03	04.01.2022					Revised as Marked
		SR	MC	HK	HK	

Copyright VCS Quality Services Private Limited – All rights reserved

ABBREVIATIONS:

ASME	American Society of Mechanical Engineers
ASTM	American Society of Testing of Materials
API	American Petroleum Institute
OISD	Oil Industry Safety Directorate
IS	Indian Standard

Copyright VCS Quality Services Private Limited – All rights reserved

CONTENTS

1.0 SCOPE 5
2.0 GENERAL REQUIREMENT 5
3.0 REFERENCE DOCUMENTS 5
4.0 MATERIALS 6
5.0 DESIGN REQUIREMENTS 7
6.0 CONSTRUCTION REQUIREMENTS 8
7.0 PROCEDURE QUALIFICATION 10
8.0 APPLICATION OF REINFORCEMENT AND CONCRETE COATING 11
9.0 TOLERANCES 13
10.0 WEIGHING 13
11.0 COATING OF FIELD WELDS 13
12.0 INSPECTION AND TESTS 14
13.0 REPAIRS 14
14.0 MARKING 15
15.0 HANDLING, UNLOADING, STORING AND TRANSPORTATION 15

Copyright VCS Quality Services Private Limited – All rights reserved

1.0 SCOPE

1.1 This specification covers the minimum requirements for the materials, application, inspection, handling and other activities for external concrete weight coating of pipelines.

1.2 This specification shall be read in conjunction with the conditions of all specifications and documents included in the Contract between Company and Contractor.

2.0 GENERAL REQUIREMENT

Contractor shall execute the work in compliance with all laws, by-laws, ordinances, regulation, etc. and shall provide all services and labor, inclusive of supervision thereof, materials, equipment, appliances or other things of whatsoever nature required in or about the execution of the work.

For the purpose of this specification the following definitions apply:

Words 'Shall' and 'Must' where used indicate that a provision is mandatory.

Words 'Should' and 'Will' where used indicate that a provision is not mandatory but is recommended as good practice.

3.0 REFERENCE DOCUMENTS

The latest edition(edition in force at the time of floating the enquiry) of following Codes and Standards are referenced in this specification and all provisions of these reference codes and standards shall be applicable.

ASTM A-82 : Specification for Steel Wire, Plain, for concrete Reinforcement.

ASTM A-185 :Specification for Steel Welded Wire Fabric, Plain, for Concrete Reinforcement

ASTM A-641 : Specification for Zinc Coated (Galvanized) Carbon Steel wire

ASTM C-39 : Test Method for Compressive strength of cylindrical concrete specimens.

ASTM C-138 : Test Method for Unit weight, Yield and Air Content of Concrete.

ASTM C-309 : Specification for Liquid Membrane Forming Compounds for Curing Concrete.

ASTM C-642 : Test Method for Specific Gravity, Absorption and Voids in Hardened Concrete

INDIAN STANDARD (IS)

IS-269 :Indian Standard Specification for Ordinary Portland Cement

IS-516 : Method of Test for Strength of concrete.

IS-383 : Indian Standard Specification for Coarse and Fine Aggregates from

Copyright VCS Quality Services Private Limited – All rights reserved

Natural Sources for Concrete.

IS-1199 : Method of Sampling and Analysis of Concrete.

IS-8041 : Indian Standard Specification for Rapid Hardening Ordinary Portland Cement

IS-8112 : Indian Standard Specification for 43 Grade Ordinary Portland Cement

IS-2386 (Parts-I: Indian Standard Methods of Test for Aggregates for Concrete.

thru' VIII)

IS-12269 : Indian Standard Specification for 53 Grade Ordinary Portland Cement.

In case of conflict between various requirements of this specification and reference codes, standards and specifications mentioned above, more stringent requirement shall apply.

4.0 MATERIALS

4.1 The Contractor shall supply necessary materials for application of concrete coating on line pipe duly applied with external corrosion coating.

Materials which in the opinion of Company, do not comply with the appropriate specifications shall be rejected and immediately removed from site by Contractor at his expense.

Material shall comply with following requirements:

4.2 CEMENT

Portland cement (conforming to IS-12269), or High Strength Ordinary Portland Cement (conforming to IS-8112) shall be used. Cement which has hardened or partially set or which has become lumpy shall not be used. Test certificates from the cement Manufacturer shall be supplied to the Company for all cement delivered to site.

In case concrete weight coating is to be provided at locations affected by sea water tidal flats etc., Portland cement in accordance with ASTM C-150 Type III or IS-8041 shall be used.

4.3 AGGREGATES

Aggregates shall comply with the requirements of IS: 383 and shall be tested in accordance with IS: 2386.

- **Fine Aggregates**

Fine Aggregates shall mean any of the following, as defined in IS: 383:

- Natural sand;

Copyright VCS Quality Services Private Limited – All rights reserved

- Crushed stone sand;
- Crushed gravel sand.

Sand shall be well-graded from fine to coarse in accordance with Table 4 of IS: 383.

- **Coarse Aggregates**

Use of coarse aggregates shall be subject to Company approval.

Aggregates (Fine and Coarse) shall be clean and free from injurious amounts of salt, alkali, deleterious substances or organic impurities.

4.4 WATER

The water used shall be fresh and clean and shall be free from injurious amounts of oils, acids, alkalis, salts, sugar, organic materials or other substances that may be deleterious to concrete or steel. It shall not contain chlorides, sulphates, and magnesium salts. Water from each source shall be tested prior to its use and shall be approved by Company. Seawater or contaminated water shall not be used. Water from doubtful sources shall be tested by the Contractor at his expense and approved by Company before use.

4.5 REINFORCEMENT

Concrete coating shall be reinforced by a layer or layers of steel reinforcement according to the provisions hereinafter described.

- Reinforcement shall consist of welded steel wire fabric manufactured in flat sheets or in rolls (ribbon mesh) and shall conform ASTM A-185. Wires shall conform to ASTM A-82.

- Steel wire shall be galvanized at finished size as per ASTM A-641. The diameter of the wire and spacing of wires (mesh dimensions) shall be selected according to the following criteria.

- Wire fabric manufactured in flat sheets shall be 2 x 4 inches max. Steel wire mesh, 13 gauge U.S. Steel wire (2.4 mm) min. each way.

- Wire fabric manufactured in rolls (ribbon mesh) shall be 1 x 2.5 inches of 14 gauge U.S. Steel wires (2mm wire). The above dimensions will be applied unless otherwise specified by designs. As a rule wire fabric (sheets) shall be used when concrete coating is applied by casting method, while ribbon mesh (rolls) shall be used when concrete coating is applied by impingement method.

5.0 DESIGN REQUIREMENTS

Pipes shall be concrete coated to a thickness as specified in the drawings and documents.

The concrete unit weight shall be minimum 2245 kg/m³ (140 pounds per cubic foot)

The compressive strength shall not be less than 200 kg/cm² in 28 days and 165 kg/cm² in 7 days.

Copyright VCS Quality Services Private Limited – All rights reserved

Concrete coating shape shall be circular and concentric to pipe outside diameter. Other concrete coating shapes are not acceptable.

Contractor shall be permitted to select any proportioning of materials to achieve the specified requirements of concrete density and weight.

6.0 CONSTRUCTION REQUIREMENTS

6.1 APPLICATION METHOD

Concrete coating shall be applied either using casting or impingement method. Any alteration or modifications to the methods described in this specification shall be submitted to the Company for approval. The application method shall however ensure the basic characteristics of concrete coating in compliance with the minimum requirements of this specification.

Concrete coating shape shall be circular and concentric to pipe outside diameter. Other concrete coating shapes are not acceptable.

Contractor shall submit to the Company, one month prior to commencement of work, the procedure/ method of application for approval.

Wherever practical, the total thickness of coating shall be applied in a single pass.

6.2 QUALIFICATION TESTING OF CONCRETE MIX

Before commencement of the work, Contractor shall perform all tests, either in laboratory or in field and trials necessary to properly select type of mix which meets the requirements of relevant section of this specification.

The Correct combination of the cement, aggregates and water which results in the desired properties of concrete shall be determined for each mix.

Following shall be recorded:

- Proportion and weights of the respective materials used.
- The water/ cement ratio.
- The grading of the aggregates.

Samples shall be prepared and tested in accordance with ASTM C-642 to determine the dry specific gravity of the concrete.

In parallel, test according to ASTM C-138 shall be performed so as to determine the expected correlation between concrete weight after placing and dry specific gravity (28 days after placing).

Test for concrete specific gravity at Intermediate time (7 days after coating) shall be performed.

When the results of the above tests do not meet the requirements, the mix shall be modified and concrete samples tested until a proper mix has been determined.

The mix so determined, shall then be used for sampling of concrete to be

Copyright VCS Quality Services Private Limited – All rights reserved

submitted to compressive strength tests as per ASTM C39.

Frequency of sampling for tests for density and compressive strength of concrete shall be as follows:

"Quantity" of Concrete in the Work (m^3)	Number of samples
Up to 25	3
26 to50	4
51 and above	4
	Plus one additional sample for each additional 50 m^3 or part thereof

Quantity means the volume of concrete to be used for each qualified mix.

6.3 EQUIPMENT

The equipment used for performing the concrete coating shall be capable of doing so with a required degree of uniformity with respect to thickness, density and strength. The proportioning equipment and procedure shall be of the type to assure consistently proportioned material by weight. Concrete shall be mixed in a mechanical mixer, which shall ensure thorough mixing of all materials. Any equipment that tends to separate the ingredients shall not be used. Any equipment that tends to separate the ingredients shall not be used. Ready mixed concrete supplied by ready-mixed concrete plant shall be preferred.

6.4 MEASUREMENTS AND LOGGING

All measurements as mentioned below shall be taken during the work stages and clearly logged in a proper logbook. A special logbook shall be used for recording tests results. A logbook shall refer to pipe lengths having the same nominal diameter, and steel wall thickness.

The following shall be subject to measurement and logging for each pipe length.

A LINE PIPE

1 Pipe number
2 Thickness
3 Length
4 Weight
5 Outside diameter

B. CORROSION COATING

6 Type of coating
7 Thickness of corrosion coating, mm
8 Weight of coated pipe, kg

C. CONCRETE COATING

10 Batch identification number
11 Date of placing the concrete coating
12 Average concrete coating thickness, mm

Copyright VCS Quality Services Private Limited – All rights reserved

13 "Dry Weight" of concrete coated pipe (Weight and date of weighing or Related Weight 28 days after placing of concrete and so identifiable)

14 "Unit dry weight" of concrete coated pipe

15 "Negative Buoyancy" (unit) of concrete Coated pipe

No concrete placing shall be allowed before items 1 through 9 listed at clause A, B, have been logged.

7.0 PROCEDURE QUALIFICATION

Before commencement of the work, Contractor shall perform all tests, either in laboratory or in field and trials necessary to properly select type of mix, which meets the requirements of this specification.

The type of mix, i.e. the correct combination of the cement, aggregates and water which results in the desired properties of concrete shall be at first determined for each mix and following shall be accurately checked and recorded:

- Proportion and weights of the respective materials used;
- The water/cement ratio;
- The grading of the aggregates.

Samples shall be prepared and tested in accordance with ASTM C-642 to determine the dry specific gravity of the concrete. In parallel, test according to ASTM C-138 shall be performed so as to determine the expected correlation between concrete weight after placing and dry specific gravity (28 days after placing). Test for concrete specific gravity at Intermediate time (7 days after coating) shall be performed.

When the results of the above tests do not meet the requirements, the mix shall be modified and concrete samples tested until a proper mix has been determined.

The mix so determined, shall then be used for sampling of concrete to be submitted to compressive strength tests as per ASTM C39 or IS-516.

Frequency of sampling for tests for density and compressive strength of concrete shall be as follows:

"Quantity" of Concrete in the Work (m 3)	**Number of samples**
Upto 25	3
26 to 50	4
51 and above	4 plus one additional sample for each additional 50 m3 or part thereof

Copyright VCS Quality Services Private Limited – All rights reserved

Quantity' means the volume of concrete to be used for each qualified mix.

8.0 APPLICATION OF REINFORCEMENT AND CONCRETE COATING

8.1 PIPE LENGTH PREPARATION

Prior to placing of reinforcement, the anti-corrosion coating of each pipe length shall be carefully inspected visually and by holiday detectors and, if damages are found, they shall be repaired in accordance with the relevant specification, before start of the work. Foreign matters, if any, shall be removed from the surface of the protective coating.

8.2 PLACEMENT OF REINFORCEMENT

- Reinforcement shall be placed around the pipe in such a way as to cover the whole pipe length or sections to be concrete coated. The reinforcement shall not protrude beyond the concrete coating ends.

- Reinforcement shall rest on synthetic resin spacers forming a "Crown" whose number shall be such as to avoid any contact with the pipe's protective coating. Spacing between the two consecutive "crown" centres shall be 500 to 1000 mm.

- Splices and attachments shall be done by binding with steel wire having 1.5 mm diameter. Circular and longitudinal joints of wire fabric in sheets shall be lapped at least for one mesh. When wire fabric in rolls (ribbon mesh) is used, the spiral lap shall be one mesh while and spliced lap shall be three meshes.

- One layer of reinforcement steel shall be provided for concrete thickness less than 50 mm. The reinforcing steel shall be embedded approximately midway in the concrete coating thickness. For concrete thickness 50 mm and above two layers of reinforcing steel shall be provided. If application method requires more than one pass concrete, one reinforcement layer for each pass is to be applied independently from concrete coating thickness.

  In case of one layer of reinforcement, it shall be located approximately in the middle of the concrete thickness. In case of two layers of reinforcement, layers shall be located at 1/3rd and 2/3rd of the concrete thickness. In case of three layers of reinforcement, layer shall be located at 1/4th, 1/2 and 3/4th of concrete thickness. Contractor shall demonstrate that the procedure used ensures no physical contract between steel reinforcement and the pipe and the reinforcement is placed in position as mentioned above.

8.3 CONCRETE PLACING

- Concrete shall be placed within a maximum of 30 minutes from the time of mixing (i.e. after adding water to mix) and shall be handled in such a way so as to prevent aggregate segregation and excessive moisture loss. Concrete containers shall continuously be kept clean and free from hardened or partially hardened concrete.

- The moisture content of the aggregates used shall be such as to maintain a satisfactory control on the water/ cement ratio of the concrete mix.

Copyright VCS Quality Services Private Limited – All rights reserved

To maintain the water/ cement ratio constant at its correct value, determination of moisture contents in both fine and coarse (if used) aggregates shall be made as frequently as possible, the frequency for a given job being determined by the Company Representative according to weather conditions.

- If casting method is used, once reinforcement and mould have been applied around the pipe, concrete mixture shall be poured through an opening on the upper section of the same mould. Concrete shall not be deposited from a height greater than 1 metre. During pouring of concrete, vibrator sets applied inside of pipe or outside the mould shall vibrate the mix so as to obtain the best possible compactness.

- If impingement method is used, placement of concrete shall be up to the specified thickness in one continuous course, allowance being made for splices of reinforcement and providing reinforcement in the right location. Concrete shall be projected at high velocity against the external surface of pipe, to produce a hard, tight-adhering coating of the specified thickness.

- No casting shall be interrupted or passes shall be stopped for more than 30 minutes. Before placing fresh concrete against the joint, the contact surfaces shall be carefully cleaned and wetted to obtain a good bond between the fresh material and the previously placed material.

- Suitable means shall be provided to ensure that the temperature of the concrete, when placed, does not exceed 32°C.

- All pipes shall be kept clean and free from cement concrete and grout either inside or outside of the uncoated sections.

- Bevel protectors shall be kept in place throughout the coating application and after.

- The coating at each end of the pipe shall be bevelled to a slope of approximately two-to-one. (2:1). It shall terminate about 50 mm short of the end of the corrosion coating applied on the pipe surface.

8.4 CURING

- Immediately after concreting, the exposed surfaces of the concrete shall be protected during hardening from the effects of sunshine, drying winds, rain, etc. and then after the initial set has taken place; the concrete coating shall be properly cured. The coated pipe sections shall be handled gently by suitable means to prevent undue distortion.

- Curing shall be performed by application of an approved curing membrane using sealing compounds and shall meet the requirements of ASTM C-309. The material shall be stored, prepared and applied in strict conformity with the instructions of the Manufacturer. The ingredients of any such compound shall be non-toxic and non-inflammable and shall not react with any ingredient of the concrete, the reinforcement, protective coating or pipe. The application of the curing compound shall take place immediately after the coating is completed and preferably before the pipe is removed from the concrete coating apparatus. The surface of the

Copyright VCS Quality Services Private Limited – All rights reserved

concrete shall be lightly sprayed with water before applying the curing compound. The membrane curing period shall not be less than 4 days, during which period the freshly coated pipes shall not be disturbed. The pipe surface shall be kept wet during daylight hours for seven days after application of the concrete coating. The concrete coating shall not be allowed to dehydrate.

Curing of concrete coating may also be done by using jute bags, provided continuous wetting is ensured by the Contractor.

- Before handling and hauling the concrete coated pipes, a check shall be made to make sure that the concrete coating is properly cured. Stacking and transportation of the coatedpipe shall be initiated only after seven days provided that the concrete coating suffers no damage.

9.0 TOLERANCES

9.1 Contractor shall maintain a surface tolerance of 8 mm (5/16") maximum for the radial distance between high and low areas of the surfaces. The diameter of each coated pipe shall be obtained at three (3) or more points, spaced at equal intervals between the end points.

9.2 The acceptable weight tolerance for any single pipe shall be limited to plus five (5) or minus two (2) percent of the calculated theoretical weight. The theoretical weight shall be calculated using total weight of the pipe with concrete and corrosion coating.

10.0 WEIGHING

10.1 The test specimen shall be selected at equal intervals during the course of production.

10.2 Contractor shall weigh each pipe when dry prior to transportation and 28 days after placing of concrete and mark the weight with paint on the inside of the pipe. The weight mark shall be followed with letters "DW" meaning Dry Weight.

10.3 The acceptable weight tolerance of any single pipe shall be limited to +5% or -2% of the calculated weight of concrete. Calculated weight shall consider only the weight of concrete coating based on approved concrete density and thickness.

In case Contractor opts not to weigh the pipes, the Contractor shall provide 20% extra concrete coating thickness over the specified concrete thickness at no extra cost and time to Company.

11.0 COATING OF FIELD WELDS

The Contractor shall coat the uncoated pipe surface at field welds in accordance with methods approved by Company. Contractor shall submit a detailed procedure for joint coating for Company's approval.

The reinforcement for the field welds shall be same as that for line pipe coating with the same number of layers and the same space between layers as for the existing coating. The edges of this netting must be carefully secured with galvanized wire to the reinforcement extending from the existing coating.

Copyright VCS Quality Services Private Limited – All rights reserved

The reinforcement shall not make direct or electrical contact with the pipe.

Synthetic resin spacer blocks may be used to keep the reinforcement free from the pipe coating. The moulds used for applying the concrete coating shall be supplied by the Contractor. The composition of the concrete shall be the same as that of the concrete coating of the pipe.

When using moulds, the Contractor shall prevent air being trapped by applying mechanical vibrators or by striking the outside of the moulds with sticks.

If the moulds remains around the pipe, e.g. in the case of submerged pipes floated into position, the Contractor shall take appropriate measures to prevent too much water entering the mould. After the mould has been filled with concrete the filling opening must also be closed off by clamping a strip to burlap under the sealing cover.

12.0 INSPECTION AND TESTS

12.1 Before application of concrete, two test cubes each per day shall be obtained from batches and tested at the end of 7 days after curing, for compressive strength and specific gravity.

12.2 After curing, every length of concrete coated pipe shall be non-destructively tested by means such as "ringing" to determine if any suspected defects are present. In case this indicates faulty coating, cores shall be removed from coating and inspected. When defective coating appears from cores, the concrete costing shall be removed from the pipe lengths.

12.3 Every length of concrete coated pipe shall be checked to verify insulation between steel reinforcement and pipe by means of a megger or equivalent device. To this purpose provisions should be made during placing of concrete such as to leave at least a point of exposed steel reinforcement whenever the latter shall terminate inside of concrete coating.

12.4 During the tests as per clause 11.3 above, and before transporting of concrete coated pipes, every pipe length shall be visually inspected to detect whether any damages and/ or defects are present. Possible damages and/ or defects with their allowable limits are described at following clause 12.0. Repairable concrete coatings shall be clearly marked while the non-repairable once shall be removed from the pipe lengths.

13.0 REPAIRS

The following repairs are permitted to coating due to unavoidable damage in handling and in storage (This applies only to concrete that has hardened).

13.1 Spalling due to compression or shearing caused by impact against other objects. Spalling is defined as damage, which causes a loss in concrete of more than 25 % of the total thickness of the coating at the point of damage.

13.2 Damage due to spalling of an area of less than 0.1 m² (1 square foot) where the remaining concrete is sound and reinforcement steel is not exposed, will be accepted without repairs.

Copyright VCS Quality Services Private Limited – All rights reserved

13.3 Damage due to spalling of an area of less than 0.1 m² with reinforcement exposed; and area more than 0.1 m² and less than 0.3 m² shall have the concrete remaining in place over that area removed as necessary to expose the reinforcing steel throughout the damaged area. Edges of the spalled area shall be under-cut so as to provide a key lock for the repair material. A stiff mixture of cement, water and aggregate shall be trowelled into and through the reinforcement and built up until the surface is level with the coating around the repair. The pipe shall then be carefully laid with the repaired area at the top and shall be moist cured for a minimum of thirty six (36) hours before further handling.

13.4 Should the damaged area be more than 0.3 m², coating shall be removed around the entire damaged area. A repair shall be made by satisfactorily restoring the reinforcement, forming the area with a metal form and pouring a complete replacement of materials similar to that from which the coating was made. The mixture shall be one (1) part of cement to three (3) parts of aggregate and the necessary water to produce a slump not to exceed 100 mm (four inches). The resulting coating shall be equal in weight, density, uniformity, thickness, strength and characteristics to the originally applied coating. The pipe shall then be carefully laid in a position where it shall be allowed to remain for a minimum of 36 hours before further handling.

14.0 MARKING

14.1 Every concrete coated pipe length shall be clearly marked by a suitable type of paint. Markings of concrete coating shall be made inside of pipe close to bevel end, in such a way that the area involved by welding operations is not affected by paint.

14.2 For each concrete coated pipe length, at one of the two ends, the field identification number and the date of concrete placing shall be marked, while the dry as well as the wet weight along with number of days after coating shall be marked at the other end.

In addition, Contractor shall develop a colour coding (band) system to be marked on the outside surface for easy identification of the coated pipe for each concrete coating thickness, concrete density, pipe diameter, pipe thickness and pipe material variation.

15.0 HANDLING, UNLOADING, STORING AND TRANSPORTATION

15.1 Once the pipe sections have been taken on charge, the Contractor, complying with provisions of the contract, shall execute their transport together with other material, either supplied by him or by the Company, from the site of receipt to the coating yard and after concrete coating completion and acceptance, to delivery point at laying field or storage areas as previously established providing each time the necessary storages.

15.2 Materials other than pipes and which are susceptible of deteriorating or suffering from damages especially due to humidity or other adverse weather conditions, shall be suitably stored and protected.

Copyright VCS Quality Services Private Limited – All rights reserved

15.3 During loading, transport, unloading and hauling of inert aggregates, any contact and mixing with mud, earth, grease and any other foreign material shall be carefully avoided. Precautions shall be taken to prevent contamination, to maintain the cleanliness and against effects of hot or cold weather or other adverse climatological condition.

15.4 During the operations of loading, unloading and stock-piling, the pipe sections shall be handled in such a way so as to avoid dents, cuts, cracks and other damages especially at beveled ends or damages to protective and/ or concrete coating.

15.5 Stacks shall consist of a limited number of layers such that the pressure exercised by the pipes own weight does not cause damage to coating. Stacking with more number of layers shall be agreed upon with the Company provided that each pipe section is separated by means of spacers suitably spaced so as to avoid stresses and compressed points of contact on the coated surfaces.

Copyright VCS Quality Services Private Limited – All rights reserved

ENERGISING QUALITY

VCS QUALITY SERVICES PVT. LTD.

STANDARD SPECIFICATION

FOR
FIELD JOINT COATING

VPC – SS – PP - 2012

01	06.03.2020	RE-ISSUED AS STANDARD	MD	SK	SK
REV. No	DATE	Purpose	Prepared By	Checked By	Approved By

REVISION RECORD

Rev.	Revision Date	Prepared by	Checked by	Approved by	Authorized by	Revision Description
00	23.06.2017					Issued as Standard Specification
		AS	SM	AD	SK	
01	06.03.2020					Document formatting, Cover Page, Doc numbering updated from SS-PL-009 to VPC-SS-PP-2012)
		MB	MD	AD	SK	

Copyright VCS Quality Services Private Limited – All rights reserved

ABBREVIATIONS:

ASME	American Society of Mechanical Engineers
ASTM	American Society of Testing of Materials
API	American Petroleum Institute
OISD	Oil Industry Safety Directorate

Copyright VCS Quality Services Private Limited – All rights reserved

CONTENTS

1.0 SCOPE 5

2.0 REFERENCE DOCUMENTS 5

3.0 MATERIAL AND EQUIPMENT 6

4.0 HEAT SHRINK WRAPROUND SLEEVE SYSTEM PRE-QUALIFICATION 9

5.0 HEAT SHRINK WRAPROUND SLEEVE APPLICATION 8

6.0 INSPECTION AND TESTING 11

7.0 REPAIRS 13

8.0 DOCUMENTATION 13

Copyright VCS Quality Services Private Limited – All rights reserved

1.0 SCOPE

This specification covers the minimum requirements of materials, equipment, application and inspection/ testing of the field joint anti-corrosion coating. This specification shall be applicable for buried onshore factory coated pipelines with either three layer polyethylene or fusion bonded epoxy coating by heat shrink wraparound sleeves.

The heat shrink wraparound sleeve shall conform to DIN EN 12068 and the requirements of this specification. Unless modified/ replaced by this specification, all requirements of DIN EN 12068 shall remain fully applicable and be complied with.

This specification shall be read in conjunction with the conditions of all specifications and documents included in the Contract between Company and Contractor. Unless specified otherwise, all sections of this specification shall apply to all specifications referred in this specification.

2.0 REFERENCE DOCUMENTS

The design, materials, fabrication, inspection, testing and supply of heat shrink sleeve shall comply with the latest edition of the following codes and standards.

AMERICAN SOCIETY OF TESTING OF MATERIALS (ASTM)

D – 149	:	Standard Test Methods of Dielectric Breakdown voltage and Dielectric strength of solid electrical insulating materials of commercial frequencies.
D - 257	:	Standard Test Method of D-C Resistance or conductance of insulating material
D – 570	:	Standard Method of Test for Water Absorption of Plastics.

INTERNATIONAL ORGANISATION FOR STANDARDIZATION (ISO)

ISO 8502 – 3	:	Preparation of Steel Substrates before Application of Paints and Related Products – Part 3 – Assessment of Dust on Steel Surfaces Prepared for Painting (Pressure Sensitive Tape Method)
ISO 8503-1	:	Part 1: Specification and definitions for ISO surface profile comparator for the assessment of abrasive blast clean surfaces.
ISO 8503-4	:	Part 4: Methods for calibration of ISO surface profile comparator and for the determination of surface profile – Stylus instrument procedure

OTHER STANDARDS

DIN EN 12068	:	Cathodic Protection – External organic coatings for the corrosion protection of buried or immersed steel pipelines used in conjunction with cathodic protection-tapes and shrinkable materials
SSPC-SP1	:	Steel Structure Painting Council

COMPANY STANDARD SPECIFICATIONS

Copyright VCS Quality Services Private Limited – All rights reserved

Following Company specifications shall form integral part of this specification and shall be complied with when applicable to the works covered in the contract.

VPC-SS-PP-2003 Standard Specification for 3-Layer polyethylene coating of Line Pipes

In case of conflict between various requirements of this specification and reference standards mentioned above, more stringent requirement shall apply unless otherwise agreed by Purchaser.

3.0 MATERIAL AND EQUIPMENT

3.1 GENERAL REQUIREMENTS

Field joint anti-corrosion coating material shall be e heat shrinkable wraparound sleeve suitable for a maximum operating temperature of (+) 60°C (Tmax) and shall conform to designation EN 12068 - C HT 60 UV. In addition, the field joint anti-corrosion coating shall comply the requirements specified in para 3.2 of this specification.

3.1.1 HEAT SHRINKABLE WRAPAROUND SLEEVES

Heat shrinkable wraparound sleeve shall consist of radiation cross-linked, thermally stabilized, ultraviolet resistant semi-rigid polyolefin backing with a uniform thickness of high shear' strength thermoplastic/ co-polymer hot melt adhesive. The joint coating system shall consist of a solvent free epoxy primer applied to the pipe surface prior to sleeve application.

The total thickness of heat shrinkable wraparound sleeve in the as applied condition shall be as follows:

Pipe Size (Specified Outside Diameter)	Thickness (mm)	
	On Pipe Body (Min.)	On Weld Bead (Min.)
< 4″	2.5	2.0
4″ – 10″	2.5	2.0
12″ – 18″	2.8	2.2
20″ – 30″	3.0	2.4
≥32"	3.3	2.6

The heat shrink wraparound sleeve shall have the required adhesive properties when applied on various commercial pipe-coating materials. The pre-heat and application temperatures required for the application of the shrink sleeve shall not cause loss of functional properties of the pipe coating.

The Contractor shall propose the Manufacturer’s details, HSS details/ Properties and the specific grade of field joint coating system meeting the requirements of this specification. Contractor shall propose only those coating systems that have been previously used for completed pipeline projects of same or higher size than the size indicated in tender, for a length of 50 km and above in a single project for similar operating conditions.

3.1.2 OTHER REQUIREMENTS

Copyright VCS Quality Services Private Limited – All rights reserved

The backing material shall be provided with either dimple or other means to indicate that the desired heat during shrinking in the field is attained.

The heat shrink wraparound sleeve shall be of a size such that a minimum overlap of 50 mm is ensured (after shrinking) on both sides of the yard applied corrosion coating of pipes. The sleeve shall be supplied in pre-cut sizes to suit the pipe diameter and the specified overlap requirement.

In the cases where carrier pipe is installed by direct boring/ jacking, the overlap on the mill, coating for the leading edges of the joints shall be minimum 200 mm. When this extra overlap is achieved by providing an additional patch of heat shrink tape/ wraparound, it shall be applied in such a manner that the square edge of the patch on the joint coating is in the direction opposite to the direction of boring/ jacking.

The pre-heat and application temperatures required for the application of the shrink sleeves shall not result in any damage to the applied mainline coating.

The Contractor shall obtain prior approval from Company regarding the Manufacturer of the field joint coating and the specific grade of the joint coating system proposed. Complete details along with test certificates shall be submitted to Company for this purpose. The said test certificate shall be from an independent DIN recognized/ approved laboratory for all the properties required for the specified EN designation of the field joint coating and the requirements of this specification.

3.2 PROPERTIES OF BACKING

Property of PE backing used as a part of heat shrink wraparound sleeve system shall comply the following:

S No	Property	Test Condition	Unit	Requirement	Test Method
a	Tensile Strength	(+)25°C	N/mm2	12 min.	DIN EN 12068
b	Ultimate Elongation	(+) 25°C	%	250 min.	DIN EN 12068
c	Dielectric withstand	1000 volts/sec	KV	30 min.	ASTM D 149
d	Volume Resistivity	(+) 25°C	Ohm-cm	1015 min.	ASTM D 257
e	Water Absorption	(+)25°C for 24 hrs	%	0.05 max.	ASTM D 570

3.3 INSTALLED FIELD JOINT COATING PROPERTIES

As applied field joint coating system shall comply the requirements of DIN EN 12068, Table 1 and 2 corresponding to designation DIN EN 12068-C HT 60 UV, except as modified below:

- Cathodic Disbondment Resistance at T_{max} i.e 60°C shall be 20 mm when tested as per Annexure K of DIN EN 12068. Test shall be carried out at (+) 60° C .
- Peel Strength shall be as follows:

Copyright VCS Quality Services Private Limited – All rights reserved

Peel Strength		Units	Required for Mech. Resistance Class C (minimum)	Test Method as per DIN EN 12068
Inner to Inner Outer to Inner	@ 23 C	N/mm	1.5	Annexure B
	@T_{max}	N/mm	0.3	
Outer to Outer	23°C	N/mm	1.5	
	@$T_{max.}$	N/mm	0.3	
To Pipe Surface	@ 23°C	N/min	5.0	Annexure C
	@ Tmax	N/mm	1.0	
To Factory Coating	@ 23°C	N/mm	5.0	
	@T_{max}	N/mm	1.0	
Notes				
T max shall be (+) 60 °C.				

3.4 TEST CERTIFICATES

The Contractor shall ensure that the Manufacturer has carried out all quality control tests on each batch of material and test certificates are provided as per the requirements of this specification. These documents shall be furnished to the Company prior to commencement of field joint coating application. Company reserves the right to have the materials tested by an independent laboratory.

3.5 MATERIAL IDENTIFICATION

All materials shall be identified by the batch number. It shall be the responsibility of the Contractor to ensure that the materials supplied are properly packed and marked with the Manufacturer's Name, material designation, batch number, date of manufacture and shelf life.

Random product batch sampling tests shall be performed at site by the Contractor and the results recorded for review by the Company. Tests shall include, but not be limited to, measurement of backing thickness, dimensional compliance and control batch records compliance.

3.6 MATERIAL STORAGE

All materials shall be stored as per the Manufacturer's recommendation. Sleeves shall upon receipt be examined to check their integrity and their compliance to the specification. The sleeves shall be stored, covered, sheltered from sunlight, and away from excessive heat. Sleeves, which for any reason have undergone visible distortion or contamination, shall be segregated and removed immediately from the installation site. Liquid materials shall be stored and handled such that their original properties are retained.

The material shall not be older than their period of validity at the time of application by the Contractor.

3.7 FACILITIES AND TOOLS FOR FIELD JOINT APPLICATION

Copyright VCS Quality Services Private Limited – All rights reserved

The Contractor shall provide and maintain mobile facilities which contain all necessary equipment, tools, tackles, etc. for carrying out the surface preparation and application of field joint coating.

The Contractor shall furnish sufficient number of following equipment and the required spares as a minimum for inspection and testing purposes for each crew:

- Full circle adjustable 25 kV holiday detector with a visible and audible signal system
- Non-destructive type thickness gauge for measuring thickness of as-applied coating
- Contact type temperature recording thermometer
- Roughness profile measuring instrument

4.0 HEAT SHRINK WRAPROUND SLEEVE SYSTEM PRE-QUALIFICATION

The field joint coating system and its application procedure proposed by the Contractor shall be prequalified during the sleeve installation start-up phase. Five joints shall be coated in compliance with the requirements of this specification and then inspected and tested in respect of the following:

- Surface preparation, including cleanliness, roughness profile and dust contamination
- Pre-heat temperature
- Primer thickness
- Visual appearance and void after sleeve installation on the body, area-adjoining weld seam and adjoining factory applied coating. A strip of 50 mm wide X 200 mm long shall be removed for this purpose.
- Holiday testing
- As-applied coating thickness
- Peel strength test at 23°C and 60°C (between sleeve and pipe surface, between sleeve and factory applied coating & between overlap)

Company Representative shall witness the tests and inspection of coating. Regular application of field joint coating commence only after successful completion of the pre-qualification testing.

After successful completion of the pre-qualification testing, the entire field joint coating shall be removed, the pipe surface re-blasted and field joint coating re-applied as per this specification.

5.0 HEAT SHRINK WRAPROUND SLEEVE APPLICATION

5.1 GENERAL

The application procedure shall be in accordance with Manufacturer's instruction and the minimum requirements specified below whichever are most stringent and shall be demonstrated to and approved by Company. Manufacturer's expert shall supervise the application and shall be available at site upon request during qualification of application procedure and during construction at Contractor's Cost.

5.2 OPERATOR QUALIFICATION

Operators for coating application shall be given necessary instructions and training before start of work, by the Contractor. To verify and qualify the application procedures, all coating applied during the qualification test shall be removed for destructive testing as detailed subsequently in this specification. Contractor shall only utilize those operators who have been approved/ prequalified by the field joint coating manufacturer.

Copyright VCS Quality Services Private Limited – All rights reserved

5.3 SURFACE PREPARATION

Oil, grease, salt and other contaminants shall be removed from steel surface by wiping with rags soaked with suitable solvents. Solvent cleaning shall be done in accordance with SSPC-SP1.

5.3.1 BLAST CLEANING

Each field joint shall be blast cleaned using a closed cycle blasting unit or open expendable blasting equipment. With the first equipment type, steel or chilled shot and iron grit shall be used and Garnet material with the second one (in case the authority having jurisdiction have no objection, the contractor may adopt sand blasting instead of garnet material). During blast cleaning the pipe surface temperature shall be simultaneously more than 5°C and more than 3°C above ambient dew point, while the ambient relative humidity shall not be greater than 85%. Prior to surface cleaning the surface shall be completely dry. The surface shall be cleaned to a grade Sa2 ½ in accordance with Swedish Standard SIS 055900 with a roughness profile of 50-70 microns. Surface roughness profile shall be measured using an approved profile comparator in accordance with ISO 8503-1 and shall be calibrated prior to start of work in accordance with ISO 8503-3 or ISO 8503-4. The blast cleanliness shall be checked on every joint and the roughness profile shall be checked 1 in every 10 joints.

Dust, grit or foreign matter shall be removed from the cleaned surface by an industrial vacuum cleaner. The contamination allowed shall be of a rating max 2 as per ISO 8502-3. The frequency of checking for dust contamination shall be 1 every 10 joints.

Blast cleaned field joint shall be coated within 2-4 hours according to the conditions below:

- Relative Humidity (RH) >80% - 2 Hours
- Relative Humidity (RH) 70-80 - 3 Hours
- Relative Humidity (RH) <70% - 4 Hours

Pipes delayed beyond this point or pipes showing any visible rust stain, shall be blast cleaned again.

5.3.2 SURFACE INSPECTION

The field joint surface shall be inspected immediately after blast cleaning and any feature of the steel surface such as weld spatter, scabs, laminations or other imperfections considered injurious to the coating integrity, made visible during blast cleaning shall be reported to the Company Representative and on permission from Company Representative, such defects shall be removed by filing or grinding. Pipes affected in this manner shall be then re-blast cleaned if the defective area is larger than 50 mm in diameter.

All steel joint surfaces shall be thoroughly examined before the application of the coating in order to ensure the surfaces are free of oil, grease, rust, mud, earth or any other foreign matter. All these substances shall be removed before coating.

5.3.3 PREPARATION OF EDGE OF FACTORY APPLIED COATING

The ends of existing factory applied mainline coating shall be inspected and chamfered. Disbonded portions of the coating shall be removed and then suitably trimmed. Portions where parent coating is removed shall be thoroughly cleaned. The adjacent chamfered areas of the line pipe coating shall also be cleaned and abraded, to expose a clean uniform fresh surface of uncontaminated factory applied coating.

Copyright VCS Quality Services Private Limited – All rights reserved

Field joint coating shall be applied on the joints immediately after the completion of cleaning operation.

5.4 PREHEATING

Before placing the wraparound sleeve, the bare steel surface shall be preheated either with a torch moved back and forth over the surface or by induction heating. The minimum pre-heat temperature shall be as recommended by manufacturer and shall be checked by means of contact type temperature-recording thermometer at minimum four (4) locations uniformly spaced around the pipe circumference.

Temperature indicating crayons shall not be used.

Pre-heat temperature shall be checked on every joint. Care shall be taken to ensure that the entire circumference of the pipe is heated evenly. Temperature measuring instruments shall be calibrated immediately before the start of the works and thereafter at intervals recommended by the Manufacturer of the instrument.

5.5 APPLICATION OF PRIMER

Upon pre-heating, the pipe surface shall be applied with two pack epoxy primer of wet film thickness of 200 microns or as per manufacturer's recommendation whichever is higher, to cover the exposed bare metal of the welded field joint and 10 mm minimum on to the adjacent pipe coating if recommended by the manufacturer. The wet film thickness of the primer shall be checked on every joint with a wet film thickness gauge prior to installation of sleeve. Thickness gauge shall be calibrated once in a shift.

5.6 APPLICATION OF HEAT SHRINK SLEEVE

Immediately after application of epoxy primer, the wraparound sleeve shall be entirely wrapped around the pipe within the stipulated time recommended by the Manufacturer. Sleeve shall be positioned such that the closure patch is located on one side of the pipe at 10 or 2 O'clock position, with the edge of the undergoing layer facing upward and an overlap of minimum 50 mm. Gently heat by appropriate torch the backing and the adhesive of the closure and press it firmly into place.

A heat shrinking procedure using heating torch or induction heaters shall be applied to shrink the sleeve in such a manner to start shrinkage of the sleeve beginning from the center of the sleeve and heat circumferentially around the pipe. Continue heating from the center towards one end of the sleeve until recovery is completed. In a similar manner, heat and shrink the remaining side. Shrinking has been completed when the adhesive begins to ooze at the sleeve edges all around the circumference and change in the visual indicator other means provided on the backing material, to signify proper shrinkage, shall be complete and uniform.

The complete shrinking of the entire sleeves shall be obtained without undue heating of existing pipe coating and providing due bonding between pipe, sleeve and pipe coating. The installed sleeve shall not be disturbed until the adhesive has solidified.

6.0 INSPECTION AND TESTING

6.1 VISUAL INSPECTION

Visual inspection of the as applied coating shall be carried out on every joint, for the following:

- Mastic extrusion on either ends of the sleeve shall be examined

Copyright VCS Quality Services Private Limited – All rights reserved

- There shall be no sign of punctures or pinholes or bend failure. The' external appearance of the sleeve shall be smooth, free of dimples, air entrapment or void formation. All sleeves shall be tested for the presence of voids by knocking on the sleeves. A hollow sound compared to the remainder of the sleeve may indicate the presence of voids under; the sleeve. Such sleeve shall be tested for-adhesion at the discretion of the Company Representative.
- Weld bead profile shall be visible through-the sleeve
- Visual indicator provided on the backing and the closure patch showing desired heat is achieved.

6.2 COATING THICKNESS

Coating thickness shall be checked by non-destructive methods for each field joint. Average thickness of the as-applied coating on pipe body shall be established based on measurements at min. eight locations i.e. four measurements on either side of the girth weld at 3, 6, 9 & 12 O' clock positions. To establish the minimum thickness on the girth weld, four measurements shall be taken on apex on the weld at 3, 6, 9 & 12 O' clock positions. All such measurements shall be recorded. Company representative reserves the right to ask for additional measurements at any location on the field joint coating, whenever doubt arises.

6.3 Holiday Detection

The entire surface of each joint shall be inspected by means of a full circle holiday detector approved by Company, set to a DC voltage applicable as per the requirements of factory applied mainline coating specification of Company. Inspection of the sleeves shall be conducted only after the joint has cooled below 50°C. The holiday detector used shall be checked and calibrated daily with an accurate DC voltmeter. The detector electrode shall be in direct contact with the surface of coating to be inspected.

No field joint shall be covered or lowered in the trench until it has been approved by the Company.

6.4 Peel Strength Testing

6.4.1 One out of every 50 joint coatings or one joint coating out of every day's production, whichever is stringent, shall he tested to establish the peel strength on steel and factory applied coating. Contractor shall carry out such testing in the presence of Company Representative.

6.4.2 From each test sleeve selected as above, one or more strips of size 25mm x 200 mm shall be cut perpendicular to the pipe axis and slowly peeled off.

The required peel strength shall meet the requirements of this specification as applicable for (+) 23 °C or (+) 60 °C whichever is feasible. This test shall be conducted between wrapping & metal and mill coating & between layers at Overlap with joint coating (wherever applicable). After removal of strip, the bulk of adhesive shall remain adhered to the pipe showing no bare metal, otherwise, test shall be considered failed. The adhesive layer that remains on the pipe surface shall generally be free of voids resulting from air or gas inclusion. In case the peel strength test at a different temperature than that specified is warranted due to the ambient site conditions, then the peel strength shall comply the recommendation of the manufacturer. Manufacturer shall be asked to furnish peel strength values corresponding to various expected temperatures, prior to start of the works.

6.4.3 If the sleeve does not meet the requirements of clause 6.4.2 the adjacent two sleeves shall also be tested. If the adjacent two sleeves are acceptable the test rate shall be increased to

Copyright VCS Quality Services Private Limited – All rights reserved

one sleeve every twenty five until Company's Representative is satisfied. The test rate can then be reduced as per clause 6.4.1 at discretion of Company's Representative. If either or both of the adjacent two sleeves do not meet the requirements of clause 6.4.2, the field coating shall be stopped.

6.4.4 Company Representative reserve the right of 100% removal of sleeves if he is not convinced that the requirements of clause 6.4.2 are achieved.

7.0 REPAIRS

7.1 If a field is detected to be unacceptable after testing as per section 6.0 of this specification the Contractor shall, at his own cost:

- Determine the cause of the faulty results of the field coating.
- Mobilize the expert of manufacturer, if required.
- Test to the complete satisfaction of Company, already completed field coatings.
- Stop the field coating works until remedial measures are taken against the causes of such faults, to the entire satisfaction of the Company.

7.2 Contractor shall replace all joint coating found or expected to be unacceptable as per section 6.0 of this specification.

7.3 Contractor shall, at his own cost repair all areas where the coating has been removed for testing by the Company.

7.4 After the coating work on welded joints and repan to the coating have been completed the coating as a whole shall be tested with a spark-tester before lowering or jacking the pipeline.

7.5 Company shall be entitled to check the coating on buried pipelines or parts of pipelines with equipment such as the "Pearson Meter" and the resistance meter or during CP survey. If coating defects are established, the Contractor shall be responsible for excavation at such points, repairing the coating, spark testing and backfilling the excavations without extra cost to Company.

8.0 DOCUMENTATION

8.1 PRIOR TO PROCUREMENT

The Contractor shall furnish the following details for qualification of the heat shrink wraparound sleeve Manufacturer and the material, prior to commencement of procurement, for Company approval:

- Comprehensive information as per Section 5.2, DIN EN 12068 along with descriptive technical catalogues
- Test certificates and results of previously conducted tests, for all properties specified in this specification
- Reference list of previous supplies of similar material in the last five years, indicating the project name, pipeline diameter, operating temperature, year of supply, contact person and performance feedback

8.2 PRIOR TO SHIPMENT

- The Contractor shall furnish the following documents, prior to shipment of the materials:
- Test certificates and results as per Manufacturer's quality control procedure for each batch

Copyright VCS Quality Services Private Limited – All rights reserved

of materials

- Specific application instructions
- Storage and handling instructions
- Recommended peel strength values corresponding to expected site conditions/ ambient temperatures.

8.3 PRIOR TO FIELD APPLICATION After successful qualification of field joint coating system and its application procedure, the Contractor shall submit a qualification report before commencement of production of field joint coating.

Copyright VCS Quality Services Private Limited – All rights reserved

ENERGISING QUALITY

VCS QUALITY SERVICES PVT. LTD.

STANDARD SPECIFICATION
FOR
HORIZONTAL DIRECTIONAL DRILLED CROSSINGS

VPC – SS – PP - 2013

04	11.02.2022	SR	MC	HK	GW
Rev. No	Date	Prepared By	Checked By	Approved By	Authorized By

UNCONTROLLED COPY	:	If printed
CONTROLLED COPY	:	If in soft and signed

Copyright VCS Quality Services Private Limited – All rights reserved

REVISION RECORD						
Rev.	**Revision Date**	**Prepared by**	**Checked by**	**Approved by**	**Authorized by**	**Revision Description**
00	23.06.2017					Issued as Standard Specification
		AS	SM	AD	SK	
01	21.02.2018					Document formatting, Cover Page, Doc numbering updated from SS-PL-011 to VPC-SS-PL-0011)
		SHH	MC	AD	SK	
02	28.01.2020					Document numbering updated from VPC-SS-PL-0011 to VPC-SS-PP-2013
		MB	SM	AD	SK	
03	04.01.2022					Revised as Marked
		SR	MC	HK	HK	
04	11.02.2022					Revised as per Client Comments
		SR	MC	HK	GW	

Copyright VCS Quality Services Private Limited – All rights reserved

ABBREVIATIONS

ASME	American Society of Mechanical Engineers
API	American Petroleum Institute
OISD	Oil Industry Safety Directorate (of India)
SMYS	Specified Minimum Yield Strength
PNGRB	Petroleum and Natural Gas Regulatory Board
SMYS	Specified Minimum Yield Strength

Copyright VCS Quality Services Private Limited – All rights reserved

CONTENTS

1.0 SCOPE 5

2.0 REFERENCE DOCUMENTS 5

3.0 DESIGN AND ENGINEERING 6

4.0 CONSRUCTION..... 9

5.0 DOCUMENTATION..... 20

Copyright VCS Quality Services Private Limited – All rights reserved

1.0 SCOPE

1.1. This specification covers minimum technical requirements related to various activities to be performed by an agency/ contractor entrusted with the responsibility to install pipeline at crossings (i.e., Major Rivers, Canals, Highways etc.) using Horizontal Directional Drilling (HDD) technique.

1.2. This specification shall be read in conjunction with the requirements of scope of work, all specifications, documents, drawings and other requirements included in the Contract between Company and Contractor.

1.3. Contractor shall, execute the work in compliance with laws, by-laws, ordinances and regulations. Contractor shall provide all services, labour, inclusive of supervision thereof, supply of all materials, (excluding "Company supplied Materials") equipment and appliances.

1.4. Contractor shall take full responsibility for the suitability and safety of all operations and methods involved in the work.

1.5. Contractor shall be deemed to have inspected and examined the work area and its surroundings and to have satisfied himself as far as practicable with sub-surface conditions, hydrological and climatic conditions, the extent and nature of the work and materials necessary for the completion of the work, and the means of access to the work area.

1.6. Contractor shall be deemed to have obtained all necessary information with regard to risks, contingencies and all other circumstances, which may influence the work.

1.7. Contractor shall, in connection with the work, provide and maintain at his own costs all lights, guards, fencing, as necessary or directed by Company.

1.8. For the purpose of this specification, the following definitions shall hold:

- The words 'Shall' and 'Must' are mandatory.

- The words 'Should', 'May' and Will' are non- mandatory, advisory, or recommended.

2.0 REFERENCE DOCUMENTS

2.1 Reference has also been made in this specification to the latest edition (edition in force at the time of issue of enquiry) of the following Codes, Standards, regulations and Specifications.

Copyright VCS Quality Services Private Limited – All rights reserved

AMERICAN SOCIETY OF MECHANICAL ENGINEERS (ASME)

B 31.4 : Pipeline Transportation System for Liquid Hydrocarbons and other Liquids

B 31.8 : Gas Transmission and Distribution Piping Systems

AMERICAN PETROLEUM INSTITUTE (API)

RP 1102 : Steel Pipeline Crossing Railroads and Highways

PNGRB REGULATIONS:

G.S.R 808(E) T4S : Regulations for Natural Gas Pipelines

G.S.R. Infra/ T4S/ P&PPL : Regulations for Petroleum and Petroleum products pipelines

G.S.R. 612(E) T4S : Regulations for CGD Network

COMPANY STANDARDS

VPC-SS-PP-2001 : Specification for Pipeline Construction (Onshore)

VPC-SS-PP-2003 : Specification for 3 Layer Polyethylene Coating

VPC-SS-PP-2014: Specification for Hydro Testing of Onshore Pipelines

2.2 In case of conflict between the requirements of this specification and the above referred documents, the requirements of this specification shall govern.

3.0 DESIGN AND ENGINEERING

3.1 The minimum requirements of limits of each river/ major water crossing shall be as defined in the CONTRACT drawings furnished by Company. Contractor may change the limits slightly to suit his equipment and installation technique, with prior written approval from Company.

3.2 Within the entire limits of crossing, as defined in the CONTRACT drawings, the cover to top of corrosion coated pipe shall be at least 2.5 metres below the "specified" minimum scour level profile for the river/ major water bodies with normal soil, and at least 1.5 metres below the "specified" minimum scour level profile for the river/ major water bodies with rock sub-strata.

Copyright VCS Quality Services Private Limited – All rights reserved

3.3 The entry and exit points of the pipeline at ground level shall not come within the limits of crossing as defined for individual river/ major water crossings.

3.4 Wherever the drilled length for a river/ major water crossing includes the crossings of other obstacles such as roads, railroads, canals, streams, etc. Following minimum requirements of cover to the pipe shall be satisfied:

For Road Crossing	: Minimum 2.5 m from top of road to top of pipe coating or as specified in Design Basis, in case of conflict more stringent requirement shall govern.
For Railroad Crossing	: Min. 7 m from the ground level throughout the railway land with in embankment and also at least 7 m below formation level in cutting throughout the railway land width from Top of pipe coating.
For Canal/Stream Crossing	: Min.2.5 m from lowest bed level to top of pipe coating or as specified in Design Basis, in case of conflict more stringent requirement shall govern.
For Drainage Ditches at Road/Railroad	: Min. 1.5 m from bottom of ditch to top of pipe coating or as specified in Design Basis, in case of conflict more stringent requirement shall govern.

3.5 Contractor shall carry out calculations for determining the maximum permissible overburden on pipe, to check that the empty pipeline is safe from collapse at any point along the drilled crossing section. Drilled hole shall be checked against collapse/caving under overburden and pipe shall be checked against buckling/collapse under axial tension and bending stresses. Contractor shall submit these calculations to Company for approval.

3.6 Pipeline Axis

As shown in the reference drawing at each crossing, the plane containing the pipe axis shall be perpendicular to the horizontal plane. There shall be no bending of longitudinal pipe axis at depths shallower than two metres below ground level.

3.7 **<u>Back-reamed Hole and Pipeline Interface</u>** For each crossing, Contractor shall devise a suitable combination of the following in order to optimise the crossing design in terms of pipeline stresses and pull force requirements.

- Back-reamed hole diameter
- Bentonite density
- Pipeline submerged weight in bentonite (and means to achieve that weight)

Copyright VCS Quality Services Private Limited – All rights reserved

Contractor shall indicate the maximum shear stress in the pipeline coating that will result due to the above parameters and other design characteristics described in this section. Contractor shall furnish all calculations for Company's approval. If shear stress on pipe coatings is, in the opinion of Company, beyond the permissible limits, Contractor shall revise the above parameters to reduce shear stress on pipe coating to permissible limits.

3.8 Contractor shall determine the minimum allowable elastic bend radius for the pipe from the following considerations:

3.8.1 Pipeline Longitudinal Stress during Installation

Total maximum longitudinal stress in the pipeline due to tension and bending at any location shall not exceed 90 % of the SMYS of the pipe material. Contractor shall, in order to check this requirement, evaluate the maximum tension forces to which the pipeline is subjected at any phase of its installation during the pulling operation.

3.8.2 Pipeline Equivalent Stress during Final Hydrotest

After installation, the pipeline shall be hydrostatically tested to a minimum test pressure equal to 1.5 times the design pressure for gas pipeline and 1.25 times the design pressure for liquid pipeline. The combined equivalent stress in the pipeline due to bending and test pressure shall not exceed 90 % of the SMYS of pipe material.

3.8.3 Pipeline Maximum Equivalent Stress during Service

Permissible values of pipeline maximum equivalent stress during service shall be governed by the requirements of ASME B31.8/ B31.4, as applicable.

3.8.4 The minimum allowable radius of curvature for the pipeline shall be the highest value of the minimum pipeline elastic bend radius as computed from the considerations outlined as above (Para 3.8.1 thru 3.8.3) after correction for drilling inaccuracies or multiplication by the factor 1.85 whichever result in the highest permissible value of minimum elastic bend radius.

3.8.5 Contractor shall submit all calculations for Company's approval.

3.9 Pipeline Configuration along the Supported String before Entry Point

For each crossing, Contractor shall determine the required pipeline configuration in order

to allow smooth pull in the crossing entry point and admissible stress in the supported pipeline string. Pipeline combined stress shall not exceed 90 % of the SMYS for line pipe material.

Copyright VCS Quality Services Private Limited – All rights reserved

Contractor shall furnish all calculations and specify the number of required supports, description of the supports, their coordinates and capacity in metric tons. Contractor shall also furnish a drawing of the launching ramp indicating the pipeline configuration. The distance between each roller shall also be specified. Calculations for roller in this respect shall be submitted.

3.10 Contractor shall, based on results of design and engineering carried out by him, prepare construction drawings for each river/ major water crossing and shall submit the same for Company's approval. Construction drawings shall indicate the pipeline profile with levels furnished at sufficient intervals for proper control during construction. Other relevant details viz. entry and exit angles, radii of bends, etc. shall also be indicated. Contractor shall also calculate the total length of pipeline required as well as the maximum tension required on the pull head of the rig. All construction works shall be carried out in accordance with the construction drawings approved by Company

3.11 Before commencement of any field work, Contractor shall furnish for Company approval all design calculations as stipulated in Para 3.5, 3.7 thru 3.10 above and all construction drawings. Company shall inform Contractor within 21 calendar days of receipt of such calculations/drawings/data, of its comments/clarifications, if any on the same. Contractor shall incorporate the comments, if any and resubmit the documents for Company approval.

4.0 CONSRUCTION

Contractor shall comply with all the conditions and requirements issued by Authorities having jurisdiction in the area where the work is to be performed. If no public road exists to the crossing location, Contractor shall arrange on his own for access to his work area at no extra cost to Company.

Copyright VCS Quality Services Private Limited – All rights reserved

4.1 Installation Procedure

Contractor shall, before commencing any work at site, submit for Company's approval a detailed installation procedure for each river/ major water crossing.

a) Project Organisation Chart indicating Contractor's organizational set-up at site and manpower deployment

b) Preparation of fabrication yard and launching areas

c) Details of all equipment to be deployed for preparation of pipe string and installation of crossing. Technical characteristics and capacity of each equipment including instrumentation, monitoring and control equipment shall be furnished in details.

d) Pipeline string preparation details (hauling, stringing, welding, etc.)

e) Method of installation covering all steps of construction, viz. rig

up, Calculations for maximum pulling force on the rig and recommended maximum pulling speed and rig anchoring.

f) Hole collapse and pipe buckling calculations

g) Pre/post-installation hydrostatic test procedure.

h) Cold field bending and tie-in details.

i) Time schedule for construction

Company shall inform Contractor within 21 calendar days of receipt of above installation procedure, of its comments/clarifications, if any, on the same. Contractor shall incorporate the comments, if any and resubmit the documents for Company approval.

The time schedule shall be in accordance with overall time schedule for the project.

Approval by Company of the methods used by Contractor shall in no way relieve the Contractor from the sole responsibility for safe and satisfactory installation of the crossing.

4.2 ROU Preparation

The Contractor is required to perform his construction activities within the width of ROU set

Copyright VCS Quality Services Private Limited – All rights reserved

aside for construction of pipeline, unless he has made other arrangements with the land owner and/or tenant for using extra land.

Contractor shall clear and grade the length of ROU required for installation of on land portion and drilled river-crossing portion in his scope. Contractor shall do such grading on ROU to provide access to the pipeline construction and to ensure safe construction of pipeline.

Contractor shall ensure that his construction activities shall neither cause inconvenience to public nor shall there be any undue interference with the normal use of the land and watercourses. Minimum necessary trees on ROU to be cut/ felled shall be identified, permissions obtained, recorded and record shall be handed over to Company. The ROU clearing and grading operations shall in no case involve damages/changes of embankment/structures of any type and class without prior approval of the authorities having jurisdiction over the same.

4.3 Taking-over, Handling, Hauling, Storing and Stringing of pipes and other materials

4.3.1 Contractor shall receive and take-over against requisition bare/corrosion coated line pipes from Company's designated place(s) of issue, as defined elsewhere in the CONTRACT. Contractor shall be fully responsible for the pipe and pipe identification marking from the time of taking delivery from the Company, until such time that the pipes are installed in permanent installation.

4.3.2 Contractor shall perform visual inspection of the bare pipes and coating of the corrosion coated pipes in the presence of Company Representative and all damages shall be recorded. In the case of corrosion coated pipes, Contractor at his option may carry out holiday detection at a prescribed set voltage and record such holidays, in the presence of Company Representative at the time of "taking over". However, if Contractor proposes to perform only visual inspection of coating, then the repair of all the holidays found at the time of installation shall be carried out by the Contractor at no extra cost to Company.

4.3.3 Contractor shall perform visual inspection of the bare pipes and coating of the corrosion coated pipes in the presence of Company Representative and all damages shall be recorded. In the case of corrosion coated pipes, Contractor at his option may carry out holiday detection at a prescribed set voltage and record such holidays, in the presence of Company Representative at the time of "taking over". However, if Contractor proposes to perform only visual inspection of coating, then the repair of all the holidays found at the time of installation shall be carried out by the Contractor at no extra cost to Company.

Copyright VCS Quality Services Private Limited – All rights reserved

The Contractor shall be entitled for extra compensation for repair and rectification of defects recorded at the time of taking delivery as per the rates set forth in the 'Schedule of Rates'. Repair of all damages beyond such record shall be the Contractor's responsibility at his cost. Contractor shall be fully responsible for arranging and paying for all/ any storage areas.

4.3.4 Materials which are susceptible of deteriorating or suffering from damages especially due to humidity, exposure to high thermal excursions or adverse weather conditions, shall be suitably stored and protected. Deteriorated materials shall not be used and shall be replaced with no extra cost to Company.

4.4 Pipe String

Complete pipe string shall be prepared as a single string for pulling.

4.5 Repair of Pipe Corrosion Coating

Repair of pipe corrosion coating shall be carried out by Contractor as per relevant specification included in the CONTRACT

4.6 Lining-Up

Each length of pipe shall be thoroughly examined internally and externally to make sure that it is free from visual defects, damage, severe corrosion, dirt, animals, or any other foreign objects. Each length of the pipe shall be adequately swabbed, either by use of canvas belt disc of proper diameter, compressed air blowing or by other methods approved by the Company. Damaged/corroded pipes shall be kept separate. Each length of pipe shall be examined/ cleaned by pulling through just before being welded.

4.7 Pipe Defects and Repairs

It is Contractor's responsibility to repair all internal and/or external defects. Immediately prior to aligning pipe for welding, the bevelled ends of each joint of pipe and the area immediately adjacent thereto (at least 25mm from the edge on the inside and outside of the pipe) shall be thoroughly cleaned of paint, rust, mill scale, dirt or other foreign matter by use of power driven wire buffing wheels, disc sanders, or by other methods approved by Company. This shall be done at no extra cost.

All damaged ends of pipes that are bent, cut or otherwise mutilated such that, in the opinion of the Company, faulty alignment or unacceptable welding would

Copyright VCS Quality Services Private Limited – All rights reserved

result, shall be repaired or cut-off and rebevelled to the correct angle with a bevelling machine of a type approved by Company.

Dents in bevels with a depth of less than 1 mm shall be removed by Contractor during cleaning and grinding, ahead of the welding in the field at no extra cost. Contractor shall rebevel dented bevel ends with a depth of dent between 1 mm and 3mm. Dents over 3mm depth shall be repaired by cutting and rebevelling.

4.8 WELDING

Welding of the Pipeline shall be in accordance with Welding Specification and Welding Specification Charts included in the Contract.

4.9 CORROSION COATING OF FIELD WELD JOINTS

The complete field joint shall be blast cleaned to near white metal finish to Swedish standard SIS 055900 Grade SA 2½. The coating edges shall be suitably roughed and chamfered to provide smooth transition. The joint coating material shall be Raychem's "DIRAX" or other Company approved equivalent. The method of application shall be strictly as per manufacturer's recommendations and will be subject to Company approval prior to use. Coating of field weld joints shall be carried out after pre-installation hydrostatic testing.

4.10 Installation

4.10.1 Installation shall be carried out in accordance with approved installation procedures. The entire drilled crossing shall be accomplished in a single operation.

4.10.2 Contractor shall ensure that the type of cutting tools and drilling fluids mobilized at site is suitable for the sub-soil strata at the drilling location.

4.10.3 Starting of any drilling activity is subject to approval from Engineer-in-Charge based upon the inspection of the rig capacity, number of drilling pipes and other accessories mobilized at site to ensure that the capacity of equipment is in accordance to the approved design document and/ or profile drawings to execute the work successfully.

4.10.4 Tracking and locating equipment shall be calibrated by the Contractor in presence of Engineer-in-Charge before the start work. Contractor shall continuously monitor the drilling path, entry & exit angle including depth of profile to ensure that pilot hole drilling is being carried out as per approved profile drawing. The as-drilled pilot hole profile drawing shall be verified by Engineer-in-Charge..

Copyright VCS Quality Services Private Limited – All rights reserved

4.10.5 The lateral offset of the actual exit point of the pilot hole from the calculated and theoretical exit point shall not exceed two percent of the length of the crossing; however the actual exit point shall not come outside the ROU limits of the pipeline. The length tolerance shall not exceed one per cent of the crossing length, subject to the condition that the actual exit point shall not be within the limits of crossing as defined in the Contract drawings/ documents.

4.10.6 Back reaming shall be done separately from the pipeline pulling operation. The size of the back-reamed hole shall be adequate (approximately 1.5 times the pipeline diameter) to allow enough clearance for smooth pullback of the pipeline.

4.10.7 Contractor shall be responsible for maintaining the drilled hole till such time the pipeline is pulled in.

4.10.8 During pulling operation, the buoyancy of the pipeline shall be controlled by suitable approved methods so as to maintain the buoyancy as close as possible to zero during pull-back in order to reduce friction forces of the pipeline in the hole. Bentonite slurry of specified viscosity shall be pumped into the hole, preventing the wall from collapsing and protecting the pipeline coating.

4.10.9 Contractor shall provide free of charge reasonable facilities to Company's personnel to witness all stages of construction.

4.10.10 Contractor shall be responsible for the integrity of the corrosion coating.

4.10.11 Contractor shall be responsible for the integrity of the common coating and shall apply and necessary approved protective coatings:

Coating inspection of the pipeline after completion of pulling operation shall be made by:

a. Pulling the pipe to the extent possible with normal rig set up at the exit point.

b. Excavating the adjacent portion up to and including the first field joint at the exit point.

The pipeline and joint coating shall be examined visually and with holiday detectors for defect. The length to be inspected shall, as a minimum, be one pipe length and one joint coating. In case damages/ holidays are detected in the first pipe length/ joint, the subsequent pipe length/ joint shall be exposed and coating

Copyright VCS Quality Services Private Limited – All rights reserved

integrity checks shall be made. If found acceptable by Company, the first pipe length/ joint shall be repaired and/ or replaced as directed by Company If the coating of second pipe length/ joint is also found damaged, Contractor shall propose further course of action and Company's instructions shall be followed. All works shall be done at no extra cost to Company.

4.10.12 Before final hydrostatic testing, Contractor shall `prove' the diameter of the pipeline by passing a gauging pig through the pipeline. The gauging pig shall have a diameter equal to 95% of the nominal internal diameter of the pipe. Contractor shall supply and install all temporary headers and other equipment, piping and materials and consumable for the purpose.

4.11 Protection of Underground Utilities and Special Methods

Contractor shall obtain plans and full details of all existing and planned underground services from the relevant Local Authorities and be responsible for location and protection of the same.

Where the pipeline crosses other underground utilities/structures, Contractor shall first manually excavate to a depth and in such a manner that the utilities/structures are located. Should any damage to any structure/utility etc. occur, the Owner/Authority concerned shall be contacted by the Contractor and repair shall forthwith be carried out by the Contractor at his expense under the direction and to the satisfaction of Company and the concerned Owner/Authority.

Temporary underpinning or any other type of supports and other protective devices necessary to keep the interfering structure intact shall be provided by the Contractor at his own cost and shall be of such design as to ensure against their possible failure.

4.12 Bending

After pulling the pipeline across the drilled crossing, Contractor shall cut the extended portion of the pipeline at the entry and exit points. Thereafter, the drilled portion of the pipeline shall be cut at suitable location/ depth and extended on either bank by installing a cold field bend and a straight pipe length of 12 metres (one joint), such that the top of the pipeline is minimum 1.0 metre below the natural ground level.

Copyright VCS Quality Services Private Limited – All rights reserved

The cold field bend shall be with minimum bend radius of 21 times the pipe diameter for pipe sizes 12” and below, 30 times the pipe outside diameter (OD) for pipe sizes 14” and 16" and 40 times the pipe diameter for pipe sizes 18" and above as applicable, unless specified otherwise.
Contractor shall use a bending machine and mandrel (if required) and employ approved and accepted methods of bending of coated pipe in accordance with good pipeline construction practice. The procedure shall include amongst other steps-lengths, maximum degree per pull and method and accuracy of measurement during pulling of the bend.

Cold field bends made from coated pipes shall be inspected visually and by holiday detector to locate damages, which shall be repaired by Contractor as per Company's approved Procedures.

The ends of each bent pipe length shall be straight and not involved anyway in the bending. In no event shall the end of the bend be closer than 1.5 metres from the end of a pipe or within one metre of a girth weld.

The ovalisation of the bent pipe shall not exceed 2.5% of the nominal diameter at any point. A check shall be performed on all bends in the presence of Company by passing a gauge consisting of two discs with a diameter equal to 95% of the nominal internal diameter of the pipe connected rigidly together at a distance equal to 300 mm. Mitre bends are not permitted.

4.13 Hydrostatic testing

4.13.1 Pre-Installation Hydrostatic Testing

Contractor shall hydrostatically test the complete pipe string of each river crossing before installation as per approved procedure.

The section of the pipeline corresponding to the crossing shall, before installation, be subjected to a minimum hydrostatic test pressure equal to 1.5 times design pressure for gas pipeline and 1.25 times design pressure for liquid pipeline. The combined equivalent stress in the pipeline due to bending and test pressure shall not exceed 95% of the SMYS of the pipe material.

After the temperature has been stabilized, the pressure shall be maintained in the pipeline for at least six hours and recorded by manothermograph. During the test, Contractor shall check all welds for leakage. Failure, if any, during the test shall be

Copyright VCS Quality Services Private Limited – All rights reserved

rectified by the Contractor. If the same is due to failure on account of any cause other than defect in Company supplied material, the repairs shall be done free of cost, to the satisfaction of Company.

4.13.2 Final Hydrostatic Test

The complete water crossing shall be tested after installation. The pressure shall be the same as that specified for pre-installation hydrostatic test at Para 4.13.1 above. The combined equivalent stress in the pipeline due to bending, static head and test pressure shall not exceed 95% of the SMYS of the pipe material. After temperature stabilization, test pressure shall be maintained in the pipeline for a minimum twenty four (24) hours and recorded by manothermograph. The hydrostatic testing shall be carried out in accordance with approved procedures.

4.13.3 Test procedure

Contractor shall prepare for Company's approval a hydrostatic test procedure manual for pre-testing and post-installation testing of pipeline. The test procedure manual shall include, but shall not be limited to, the following items:

a. For the pipe section to be tested, a diagram indicating all fittings, vents, valves, temporary connections, relevant elevations and ratings. The diagram shall also indicate injection locations and intake and discharge lines.

b. Estimated amount of test water, water source, including required concentration of corrosion inhibitors and additives, procedure for inhibitor injection and control of concentration.

c. Filling and flushing procedures, including a complete description of all proposed equipment and instruments (including spares), their location and set-up.

d. The type and sequence of pigs and the pig tracking system for cleaning and removal of air pockets, pig inspection procedures, including procedure to be followed in case the gauging pig indicates damage.

e. Procedures for levelling and stabilization after filling and for pressurization and to allow for temperature stabilization.

f. Pressure testing procedure including a complete description of all proposed equipment and instruments (including spares), their location and set-up, and proposed system for observation and recording of data during the pressure test.

Copyright VCS Quality Services Private Limited – All rights reserved

g. All calculations including air-volume calculations and pressure change due to temperature change calculations.

h. Procedure for detection and location of leaks.

i. Procedure for safe dewatering the pipeline section after testing, including a complete description of all proposed equipment and instruments (including spares), their location and set-up, the type and sequence of pigs and the pig tracking system along with the pig specifications.

j. Forms for recording the testing data.

4.13.2 Contractor shall furnish all necessary equipment & instrumentation for performing the work including all temporary piping, hydro test header and pigging headers etc.

4.13.3 The test medium shall be fresh water to be arranged by the Contractor. The water to be used shall be filtered, shall not be contaminated, and free from sand of silt. Contractor shall submit laboratory test reports of water used for testing. Contractor shall provide Company approved corrosion inhibitors, oxygen scavengers and bactericides to be added to the test water. Contractor shall furnish and install all temporary piping, which may be necessary to connect from source of water to its pumps and manifolds/tankage.

4.13.4 Before filling operation, Contractor shall clean the pipeline by air driven pigs provided with spring loaded brushes and cups to remove all mill scale, rust/sand from the internal of pipe sections.

4.13.5 The hydrostatic test shall be considered as positive if pressure has kept a constant value throughout the test duration, except for changes due to temperature effects, and there is no abrupt pressure drop throughout the test duration.

If test section fails to maintain the specified test pressure after isolation, Contractor shall determine by searching the location of leakage or failure. All leaks and failures within the pipe wall or longitudinal seam shall be repaired by replacement of entire joint or joints in which leakage or failure occurs. In those cases where leaks occur in circumferential welds the method of repair shall be determined by Company. Contractor shall comply with instructions of the Company whether to replace a section of the line pipe that includes the line leak or whether to repair the circumferential weld. This repair should, however, meet the requirements of welding specification contained herein. Where failures occur in pipeline field bends, bends shall be replaced with same degree of bends. After completion of repairs, the hydrostatic test shall be repeated in full, as per the approved

Copyright VCS Quality Services Private Limited – All rights reserved

procedures.

4.13.6 All work of reinstating line pipe, to replace failures, shall be done in accordance with the specifications contained herein.

Contractor shall haul and stockpile all damaged and defective pipes to storage locations designated by the Company. All cracks and splits resulting from failures shall be coated with an application of grease to preserve the characteristics of failures from corrosion. Joints of failed pipes shall be marked with paint, with a tag indicating failure details, date and location of failure and pressure at which failure occurred.

4.13.7 After completion of successful hydrotest of the above portion, the pipeline shall be capped and buried. Pipeline end position on the banks shall be marked on the ground by installing location markers on both banks approved by Company.

4.14 Permanent Pipeline Markers

On both banks of each river/ major water crossing, Contractor shall install a Navigable Waterway Pipeline Crossing Warning Sign in accordance. Contractor shall supply all materials and fabricate and install the markers as per reference drawing. Wherever feasible, the pipeline markers shall be installed on the embankments, however, exact location shall be decided based on site conditions and as directed by company.

4.15 Fencing

Wherever specified, Contractor shall supply all materials and install G.I. Wire Chain link security fencing of size 10m x 10m x 2.5m high with lockable steel gate around the pipe ends and test stations for temporary C.P. on both sides of each river/ major water crossing.

4.16 IDLE TIME PRESERVATION OF PIPELINE

When so stated in the Contract, Contractor shall supply all materials and consumable including water and inhibitor and shall install all piping connections, valves, instrumentation, etc., and perform all works for preservation of pipeline by pressurization with inhibited water. Contractor shall use approved inhibitors and shall determine the required dosages of inhibitors and pressure for idle time preservation of the pipeline for a period of maximum six months from the date of completion of construction. Corrosion inhibitors and dosages shall be subject to Company's approval prior to use.

Copyright VCS Quality Services Private Limited – All rights reserved

4.17 FINAL CLEAN UP

After completion of construction, Contractor shall clear the sites of all balance material and debris. All balance pipe lengths supplied by Company shall be returned to Company's designated stock yard(s), as defined elsewhere in the Contract. Site shall be cleared to the complete satisfaction of Company and authorities having jurisdiction. All such works shall be done at no extra cost to Company. On completion of clean-up, the ROU shall be restored to such stable and usable conditions as may be reasonably consistent with conditions of the ROU prior to laying/ installation of the pipeline.

4.18 Disposal of surplus soil & bentonite slurry & corrosion inhibited test water

Contractor shall arrange for safe disposal of all surplus soil and bentonite slurry & corrosion inhibited test water so as to avoid any harm to the environment/ occupants at locations duly approved by authorities and pollution control boards having jurisdiction and/ or as instructed by Company without any extra cost.

5 DOCUMENTATION

In addition to the documents specified elsewhere in this specification, Contractor shall submit the following documents/ records to Company.

Complete record of pipes 'taken-over' from Company, number of pipe lengths used, and record of return of balance pipe lengths to Company's designated stock-yard(s).

During the course of execution of the crossing, Contractor shall generate/compile the following data and furnish the same whenever required to Company in hard copies and electronic files.

a. Detailed drilling log and downhole data, including, but not limited to, the following:

i) Torque and pulling/pushing force

ii) Data on drilling fluid.

- Density
- Type of mud and additive employed.
- Mixing, pumping and cleaning.

b. Wash and drill pipe data, viz.

Copyright VCS Quality Services Private Limited – All rights reserved

i) Dimension and material properties.

ii) Data on API classification.

iii) Age of and type of inspection previously carried out on these pipes.

c. Permits obtained from authorities having jurisdiction for the various works.

d. Plan & profile of the drilled hole along with the water level variations.

e. Records of hydrostatic pre-testing and final testing.

f. Record of Non Destructive Testing of welds.

g. Clearance certificates form the landowners and Authorities having jurisdiction regarding satisfactory clean-up and restoration of pipeline RoU and work areas

After completion of construction, Contractor shall prepare and furnish As-Built drawings for the crossings. As built drawings shall, as a minimum include the following information:

- True profile of the river bed and banks along the pipeline;
- True profile of the pipeline as installed and the depth of cover to top of pipe at regular intervals;
- Location of entry and exit points and angles of entry and exit, along with lateral offset of exit point from the original pipeline alignment;
- Location and angle of field bends; Location of pipeline markers.

All As-Built drawings shall be prepared using software AutoCAD or above. Manually drafted drawings are not acceptable to Company. In addition, to the hard copies, as built drawings shall also be submitted in electronic media i.e. CD/ DVD.

All documents shall be in English language.

Copyright VCS Quality Services Private Limited – All rights reserved

ENERGISING QUALITY

VCS QUALITY SERVICES PVT. LTD.

STANDARD SPECIFICATION

FOR

HYDROSTATIC TESTING OF ONSHORE PIPELINES

VPC – SS – PP -2014

03	11.02.2022	SR	MC	HK	GW
Rev. No	**Date**	**Prepared By**	**Checked By**	**Approved By**	**Authorized By**

UNCONTROLLED COPY	:	**If printed**
CONTROLLED COPY	:	**If in soft and signed**

Copyright VCS Quality Services Private Limited – All rights reserved

REVISION RECORD						
Rev.	**Revision Date**	**Prepared by**	**Checked by**	**Approved by**	**Authorized by**	**Revision Description**
00	23.06.2017					Document formatting, Cover Page, Doc numbering updated from SS-PL-012 to VPC-SS-PL-0012 keeping revision number same.
		AS	SM	AD	SK	
01	28.01.2020					Document numbering updated from VPC-SS-PL-0012 to VPC-SS-PP-2014
		MB	MC	AD	SK	
02	04.01.2022					Revised as marked
		SR	MC	HK	HK	
03	11.02.2022					Revised as per Client Comments
		SR	MC	HK	GW	

Copyright VCS Quality Services Private Limited – All rights reserved

ABBREVIATIONS

ASME	:	American Society of Mechanical Engineers
API	:	American Petroleum Institute
OISD	:	Oil Industry Safety Directorate (of India)
SMYS	:	Specified Minimum Yield Strength

Copyright VCS Quality Services Private Limited – All rights reserved

CONTENTS

1.0 SCOPE 5

2.0 REFERENCE DOCUMENTS 5

3.0 GENERAL REQUIREMENT 6

4.0 TEST PROCEDURE 6

5.0 SAFETY PRECAUTIONS DURING THE HYDROTEST 7

6.0 TEST PRESSURE AND DURATION 8

7.0 EQUIIPMENT AND INSTRUMENTATION 8

8.0 HYDROSTATIC TESTING 11

9.0 CALCULATIONS 17

10.0 ACCEPTANCE 18

11.0 TERMINATION 19

12.0 TEST REPORT 20

13.0 PRESERVATION OF PIPELINE 21

14.0 PRECAUTIONS DURING THE TEST 21

15.0 DOCUMENTATION 22

TABLE 1: DIFFERENCE BETWEEN THE WATER THERMAL EXPANSION FACTOR AND THE STEEL THERMAL EXPANSION 23

FIG. 1- WATER COMPRESSIBILITY FACTOR v/s PRESSURE AND TEMPERATURE 27

Copyright VCS Quality Services Private Limited – All rights reserved

1.0 SCOPE

1.1 This specification covers the minimum requirements of supply and various activities to be performed by Contractor for hydrostatic testing of cross-country steel pipelines transporting hydrocarbons in liquid or gaseous phase under high pressure.

This specification does not cover the requirements of EGP/caliper pigging, drying/ pre-commissioning of the tested pipelines.

1.2 This specification shall be read in conjunction with scope of work, specifications, documents, drawings and other requirements indicated in and included in the Contract between the Company and the Contractor. Unless specified otherwise, all sections of this specification shall apply to all specifications referred in this specification

2.0 REFERENCE DOCUMENTS

2.1 The latest edition of following Codes and Standards are referenced in this specification and all provisions of these reference codes and standards shall be applicable.

AMERICAN SOCIETY OF MECHANICAL ENGINEERS (ASME)

ASME B 31.4	:	Pipeline Transportation Systems for Liquid Hydrocarbons and Other Liquids.
ASME B 31.8	:	Gas Transmission and Distribution Piping Systems.
ASME Sec. VIII Div. 1	:	Boiler and Pressure Vessels Code - Rules for Construction of Pressure Vessels.

AMERICAN PETROLEUM INSTITUTE (API)

API RP 1110	:	Pressure Testing of Steel Pipelines for the Transportation of Gas, Petroleum Gas, Hazardous Liquids, Highly Volatile Liquids or Carbon Dioxide.

PNGRB REGULATIONS :

G.S.R 808(E) T4S : Regulations for Natural Gas Pipelines

G.S.R. Infra/ T4S/ P&PPL : Regulations for Petroleum and Petroleum products pipelines

G.S.R. 612(E) T4S : Regulations for CGD Network

Copyright VCS Quality Services Private Limited – All rights reserved

2.2 In case of conflict between the various requirements of this specification and reference codes, standards, regulations and specifications mentioned above, more stringent requirement shall govern.

3.0 GENERAL REQUIREMENT

3.1 The Contractor shall ensure that the complete pipeline section undergoing hydrostatic test is mechanically complete in all respects, i.e welds have been accepted and the pipeline has been laid and backfilled, all mechanical and civil works completed. This has to be ensured keeping in view that, Once the section has been hydrotested, no one shall be authorized to re-open the pipeline section without prior approval of the company. Hydrostatic test shall include those sections which have been previously tested viz. Rail/ road crossings, major water crossings including test on banks and in place after installation.

3.2 Hydrostatic test shall be performed on the entire length of the pipeline in accordance with approved Hydrostatic Test procedure and Diagrams clearly indicating the number of test sections and minimum and maximum test pressures in each test sections. The maximum length of each test section shall not exceed 50 Kms.

3.3 For pipeline sections (i.e. River Crossing, Railway Crossing, HDD Crossing, National Highway Crossing, etc.) which in Company's opinion, once installed would require an inordinate amount of effort for repair in case of a leak, a provisional pre-test shall be conducted. However, after installation, such pre-tested sections shall be tested again along with the entire pipeline.

3.4 All works required for hydrostatic testing shall start only after obtaining prior approval from the Company.

3.5 The hydrostatic pressure testing operations shall be carried out by an experienced Test Engineer who shall have no other duty during the hydrostatic testing operations. The Test Engineer(s) shall be in full charge of all activities related to hydrostatic testing operations.

3.6 All headers, pre-test headers along with fittings, flanges and attachments shall be pre-tested before putting these for testing purpose.

4.0 TEST PROCEDURE

The Contractor shall submit a comprehensive hydrostatic test procedure to the Company for approval. The procedure shall also include all temporary materials and equipment to successfully complete hydro testing, but not be limited to the followings:

a) A diagram for the system to be tested, indicating all fittings, vents, valves, temporary connection, relevant elevations and ratings. The diagram shall also indicate injection locations and intake and discharge lines.

b) A diagram indicating the lengths, elevation charts, and locations of the test sections.

c) Pipeline details of the test section pipe diameter, wall thickness and material

Copyright VCS Quality Services Private Limited – All rights reserved

d) Source of water for testing and test water discharge location for each test section

e) Estimated quantity of water for filling and pressurizing

f) Details of chemicals/ inhibitors and the dosage

g) Cleaning, gauging, flushing, and filling procedures including type and number of pigs, details of gauging pig.

h) Procedures for Pig Tracking System (which shall be used in case of pig getting stuck inside pipeline).

i) Procedures for location and rectification of dents/ buckles/ other deformation, etc.

j) Temperature stabilization procedure.

k) Pressure testing procedure including all calculations and test section isolation details.

l) Procedure for detection, location and rectification of leaks.

m) Safety precautions and procedures.

n) Repair procedures for coating damage at thermocouple locations.

o) Formats to be used for recording the test data.

p) Procedure for dewatering and neutralization of corrosion inhibitor of the pipeline sections(s) after testing.

The Contractor shall not commence hydrostatic testing activities until the testing procedure is approved.

5.0 SAFETY PRECAUTIONS DURING THE HYDROTEST

The Contractor shall take all necessary safety precautions during the hydrotest. As a minimum, the following shall be taken during the hydrostatic test:

a) Provision shall be made for the installation of no-admittance signs to unauthorized personnel from the roads to the R.O.U.

b) Warning signs stating 'PIPELINE UNDER TEST-KEEP OFF" with local language translation shall be placed where the pipeline is uncovered, and particularly where the provisional traps/ test headers and stations are located. Such areas shall be suitably fenced in such a way as to prevent access of unauthorised personnel and no unauthorised personnel shall be closer than 40 m to the testing equipment or pipeline under test. Warning tapes and signboards shall also be placed near the crossings and regular intervals along the route to warn the public around those areas.

c) The test station shall be placed in such a location as to prevent it from being affected by a catastrophic failure in the test head.

Copyright VCS Quality Services Private Limited – All rights reserved

d) Once dewatering is over the sectionalizing valves and other valve assemblies tested previously, shall be installed at locations shown in the drawings and in accordance with the procedures contained in the relevant specifications.

e) All thermocouples installed in the pipeline shall be removed and damage corrosion coating shall be repaired using Company approved materials and procedure.

6.0 TEST PRESSURE AND DURATION

6.1 TEST PRESSURE

Unless otherwise specified in the Contract, the minimum hydrostatic test pressure for different classes shall be as follows:

For pipeline handling hydrocarbon in gaseous phase:

Class 1	:	1.25 times the design pressure as per ASME 31.8
Class 2	:	1.25 times the design pressure as per ASME 31.8
Class 3 and Class 4	:	1.5 times the design pressure as per ASME 31.8

For pipeline handling hydrocarbon in liquid phase:

All Location	:	1.25 times the design pressure for pipeline Handling liquids including Liquefied Petroleum Gas (LPG).

The test pressure shall be generated at the highest point in the section under test. At any point in the test section, hoop-stress due to test pressure and static head shall not exceed 95% of the Specified Minimum Yield Strength (SMYS) of pipe material.

6.2 TEST DURATION

The duration of the hydrostatic test shall be 24 hours after thermal stabilization.

7.0 EQUIPMENT AND INSTRUMENTATION

The Contractor shall provide all necessary equipment and instrumentation for performing the work as stated in cleaning, flushing, filling, stabilizing, testing, dewatering procedures.

7.1 EQUIPMENT

The equipment to be provided shall include, but not be limited to, the following in sufficient numbers along with spares:

a) Pigs for cleaning, gauging, flushing and filling.

Cleaning pigs with spring loaded steel wire brushes. For internally coated pipes, the pigs shall be provided with nylon/polyurethane brushes. . The first Cleaning pig shall be equipped with pig tracking device with a minimum battery span of 72 hours.

•

Copyright VCS Quality Services Private Limited – All rights reserved

- Four cup batching pigs / Bi Directional Pigs
- Magnetic Pigs
- Gauging pigs fitted with gauge plate.

b) The Contractor shall provide a sufficient number of pigs, including sparesFill pumps:

The Contractor shall determine the type and number of fill pumps in order to guarantee the following:

- Differential head : 20% greater than the maximum required
- Flow rate : Minimum 200 m^3/hr; Maximum 500 m^3/hr for 24" and above pipeline.

  :Minimum100 m^3/ hr; Maximum 400 m^3/ hr up to 18" Pipeline

If a single pump is used, a standby unit must be available.

c) Pressurizing pump:

Variable speed positive displacement pumps equipped with a stroke counter to pressurize the pipeline, capable of generating pressure of 20 bar (g) over and above the required test pressure of the section. Contractor shall also ensure availability of standby pressurizing pump.

d) Two Positive displacement meters/ Turbine meters to measure the volume of water used for filling the line. These meters shall be provided with a calibration certificate not older than three months.

e) Portable tanks/ Break tanks of sufficient size to provide a continuous supply of water to the pump during filling and pressurizing.

f) Injection facilities to inject chemicals/ inhibitors into the test medium in the required proportions.

g) The temporary test header shall be installed at both ends of section. Proper piping and valving arrangements shall be available to allow launching and receiving of each pig independently

The test heads shall be sized in conformity with ASME specification Section VIII, Division 2 with particular reference to Appendices 4 and 5.

7.2 INSTRUMENTATION

The instrumentation to be provided shall include, but not be limited to, the following in sufficient numbers along with spares:

a) Calibrated Bourdon pressure gauges of suitable pressure range and accuracy.

b) Dead weight testers with an accuracy of 0.01 bar, measuring with least count of 0.05 bar and provided with a calibration certificate not older than three months.

Copyright VCS Quality Services Private Limited – All rights reserved

c) 48 hours recording pressure gauges complete with pressure recording charts duly tested with dead weight tester prior to use. These shall be installed at the test head. The gauge shall having following specification :

Accuracy	:	± 0.1% of the full-scale value
Recording	:	continuous on tape or disk, graph width 100 mm
Feed	:	7.5 °/ hr for disk diagrams, 20 mm/ hr for tape diagrams
Recording	:	Range to be such as to record pressure between 50% and 90% of the diagram width

d) Temperature recorders for fill water.

Accuracy	:	± 1% of the scale range
Scale		-10 °C to +40 °C
ssRecording	:	continuous on tape or disk, graph width 100 mm
Feed	:	7.5 °/ hr for disk diagrams, 20 mm/ hr for tape diagrams

e) Environmental temperature shall be recorded from the beginning of pressurization to the end of the test by means of a recording thermometer featuring the following characteristics:

Accuracy	:	± 1% of the scale range
Scale		- 0 °C to + 60 °C
Recording	:	continuous on tape or disk, graph width 100 mm
Feed	:	7.5 °/ hr for disk diagrams, 20 mm/ hr for tape diagrams

f) Thermocouples for measuring the pipe wall temperatures, with an accuracy of ±0.1 °C

g) Two laboratory thermometers of range 0 °C to 60 °C and with accuracy of ±0.2 °C to be used in thermo wells.

h) Means to measure the volume of water necessary to drop the line pressure by 0.5 bar (container with scales or graduated cylinder).

i) Injection facilities to inject additives into the test medium in the required proportions.

j) Communications equipment stable for a continuous connection between the beginning and the end of test section and with the inspection team along the line, in accordance with the requirements of local authorities.

k) The temporary scraper traps shall be installed according to the test section fixed in the test procedure manual. Proper piping and valve arrangements shall be available to

Copyright VCS Quality Services Private Limited – All rights reserved

allow launching and receiving of each pig independently.

The test heads shall be sized in conformity with ASME specification Section VIII, Division 2.

l) Thermocouples for measuring the temperature of the pipe wall shall be installed on the pipeline to be tested at the following locations:

- One (1) thermocouple at about 500 m distance from the pumping head.
- One (1) thermocouple every 2500 m of the pipe. The spacing may be increased to maximum 5000 m depending on the terrain and nature of sub soil along the alignment of test section.
- One (1) thermocouple at about 500 m distance from the terminal head

Thermocouples shall be attached on the external surface of the pipe after removal of external coating and shall be adequately protected by padding with minimum 500 mm soil. After successful testing, the thermocouples shall be removed and damaged coating shall be repaired as per applicable coating repair procedure, approved by Company. For soil temperature measurements, the thermocouple shall be buried at pipe centerline depth at a distance of 500 mm from the pipe wall.

m) Digital pressure/ temperature monitoring and chart recording systems can be used in lieu of the components listed above provided that the individual pressure/ temperature sensors included in the system have a level of accuracy and can be field calibrated in a manner similar to those instruments listed above. Instruments shall be portable and rugged in construction with minimum weather proof rating of IP-66. They shall display pressure and temperature readings on the screen and shall have adequate memory for recording the same. The instrument shall have computer interface to export the stored data after completion of test.

8.0 HYDROSTATIC TESTING

8.1 Equipment and/ or parts which need not or must not be subjected to the test pressures or which must not be tested with water, must be disconnected or separated from the pipeline to be tested.

8.2 If the difference of minimum and maximum atmospheric temperature should cause thermal instability on the pipe section directly exposed to atmospheric condition, the test header and above ground pipeline shall be properly protected.

The pipeline test shall exclude long segments of line exposed to atmospheric conditions, viz. aerial lengths on piers, suspension bridges, etc. Such sections shall be tested separately.

8.3 TEST MEDIUM

The test medium shall be soft non-aggressive water supplied by the Contractor. The water to be used shall be filtered, shall not be contaminated and free from sand of silt. Contractor shall submit laboratory test reports of water used for testing. The possible use of sea water shall be subjected to its degree of cleanness, the possibility of obtaining a pre-determined salinity neutralization. The

Copyright VCS Quality Services Private Limited – All rights reserved

Contractor shall furnish and install all temporary piping, which may be necessary to connect from source of water to its pump and manifolds/ tankages.

8.4 INHIBITORS

Contractor shall provide Company approved corrosion inhibitors, oxygen scavengers and bactericides to be added to the test water.

Contractor shall note the following:

- All chemicals for hydro testing shall be procured from approved vendors. Chemicals olders than three months shall not be used.
- Company representative shall inspect the chemical containers and take random samples prior to its use. Contractor shall get the samples tested in an govt nominated Govt./PSU/other competent laboratories.Contractor shall get the samples tested, testing shall be carried out for accelerated % corrosion inhibition efficiency, % SRB and TBC killing efficiency test. Company reserves the right to witness the testing. The test report shall be submitted to Company for approval prior to undertaking hydro testing works.
- Only those chemicals which have passed the above tests shall be used for hydro testing.
- Chemicals shall be injected by dosing pump only and mixing in open tank shall not be allowed.

Inhibitors shall be uniformly mixed with the test water in the dosage recommended by the Manufacturer depending upon the water used and in sufficient concentration to ensure the inhibitor remains active for the duration of the test, and any possible delays to testing.

The following products are acceptable for corrosion inhibition of the water used for hydro testing:

- REMIDOL 4000 of M/s Chemtreat India Ltd., Navi Mumbai.
- HIBITOL 2000 of M/s Renkal Chemical, Navi Mumbai.
- INDION 175 of M/s Ion Exchange India Ltd., Hyderabad.
- VISCO 3900 of M/s NALCO EXXON

Indicative dosage for inhibitor is as follows:

- Upto 6 months : 500 mg/l
- Above 6 months : 750 mg/l

However the exact dosage rates shall be as per the hydro test water analysis and manufacturer recommendations.

8.5 CLEANING

Before filling operation, the Contractor shall clean the pipeline by air driven pigs

Copyright VCS Quality Services Private Limited – All rights reserved

provided with spring loaded nylon/polyurethane brushes for internal coated Pipes & wire brush cleaning pigs for internal uncoated pipes to remove all mill scale, rust, sand, etc. from the inside of pipe section. For this purpose, temporary headers for air cleaning shall be attached to the pipeline. The number of pig runs depends upon the cleaning results and shall be determined by the Owner/ Consultant at site.

Water column of 1- 2% of test section shall be injected in front of the first cleaning Pig for flushing.

8.6 Magnetic Pigging

After the successful acceptance of cleaning, Magnetic pig run shall be used to clean "constructional metallic debris" of the pipeline.

For internally coated pipes, adequate care shall be taken by using soft cups so that no damage takes place to the internal coating of the pipe.

Contractor shall decide the number of magnet cleaning pig runs and the choice of the magnet cleaning pig for each cleaning run as suitable for the purpose to obtain internal condition adequately clean.

However, the ferrous debris permitted with magnetic cleaning pig shall not exceed 5 Kg/100KM. In case debris received is more than this amount, the Contractor shall be required to make subsequent run(s) until at least the above limit is achieved.

The cleaning pigs for successive cleaning pig runs shall be selected by the Contractor in such a manner that effective cleaning i.e. 3kg/100km ferrous debris is achieved.

The best accuracy offered and guaranteed by the Contractor shall be clearly spelt out. However, the tool should have minimum capabilities as under.

Type of pig: Uni-directional

Magnet power: Min 800 gauss

Nos. of magnets: 8/6 nos.

Min. bend radius pig can negotiate: 6D

Min dia pig can negotiate: 90% standard wall thickness ID

8.7 GAUGING

After cleaning the pipeline by using air and acceptance by Company, gauging shall be carried out by using gauging pig. The gauge plate diameter shall be equal to 95% of inside diameter of the heaviest wall pipe in the test section. While computing the Inside Diameter (ID) of heaviest wall pipe, pipe manufacturing tolerances shall not be considered. A 10 mm thick aluminum plate shall be used for making gauge plate. The gauging plates shall have 8 radial incisions at 45

Copyright VCS Quality Services Private Limited – All rights reserved

degree interval.Compressed air shall be used to run Gauging pig.

After receipt of gauging pig at the other end, the gauge plate shall be inspected in the presence of Company representative. A deformed, bent or severally nicked plate or damaged pig shall be evidence of gauging pig run failure and the same shall not be acceptable to COMPANY. In such cases, the Contractor shall locate any obstruction and/ or faults such as dents, buckles, flat spots, etc. and rectify the same to the satisfaction of the Company. A written approval shall be obtained from Company regarding successful completion of gauging pig run. Photographs of the Gauge Plate before and after the gauging run shall be taken and included in the inspection report.

After acceptance of gauging operation, air header shall be cut and removed. Pre-tested test headers loaded with three numbers of four cup batching pigs shall be welded to test section.

The drawing of the test headers shall be submitted along with hydrotest procedure for approval. All fittings and flanges to be used in the test header fabrication shall be at least one ANSI rating higher than the line rating. The headers shall be pretested at line hydrotest pressure for duration of minimum 24 hours. The record shall be kept and shall be part of the final hydro test report.

8.8 WATER FILLING

After acceptance of gauging run, water filling of the testing section shall commence. For this purpose, pretested test headers loaded with three numbers of four cup batching / Bi –Directional pigs shall be welded to the test section. Weld joints between test header and pipeline shall be radiographed and accepted before filling operation starts.

Un-inhibited water equal to 10% of the volume of test section shall be filled ahead of the first pig. The first batching pig shall be launched using minimum un-inhibited water equivalent to 1.5 Km of test section for longer sections and 0.5 Km for short sections below 10 Km. Then the second pig shall be launched using inhibited water till the second pig is received at the other end. The Contractor shall continuously monitor the volume and pressure, the temperature of the fill water during the filling operation. When it has been confirmed that the filling pigs have arrived in the receiving test header, the thermal stabilization and pressurization operations can commence subsequently.

The temperature of the fill water should be recorded as it is introduced into the pipeline. This will aid in the determination of line temperature stability. Additionally, the flow rates and pressures should also be recorded or monitored to protect the pipeline from an over pressure situation.

8.9 THERMAL STABILIZATION

After a check has been made to confirm if the pressure has attained minimum 1 bar (g) on the highest section, the thermal stabilization can be started.

Thermal equilibrium between the pipeline and environment shall be checked through the Thermocouples installed on the pipeline and in the soil.

Copyright VCS Quality Services Private Limited – All rights reserved

Temperature readings shall be made at 2 hours-intervals. Thermal stabilization shall be considered to have been achieved when a difference not higher than 1 °C is attained between the average values of the last two readings.

Thermal stabilization completion shall be approved by Company.

8.10 PRESSURIZATION

8.10.1 The pressurization shall be performed in the presence of Company at a moderate and constant rate not exceeding 2 bars/ min. One pressure recording gauge shall be installed in parallel with the dead weight tester. Volume required to reach the test pressure shall be recorded periodically throughout the pressurization as follows:

- Each 5 bar increments up to 80% of test pressure as recorded by the dead weight tester
- Each 2 bar increments between 80% to 100% of test pressure as recorded by the dead weight tester
- It is preferable for a pressure–volume plot to be initiated at the start of the pressurization process and continued until the test pressure is reached. The lower end of the pressure–volume plot can be used to determine the total amount of residual air in the test section. The upper end of the pressure volume plot can be used to determine if any pipe in the test segment may have reached its elastic limit.

8.10.2 The pressurization shall be cycled according to the following sequence:

- Pressurize to 50% of test pressure, hold pressure for 1 hour,
- Drop pressure to static head of test section at test head,
- Pressurize to 75% of test pressure, hold pressure for 1 hour
- Drop pressure to static head of test section at test head
- Pressurize to test pressure.

During the pressurization to each test pressure (50% , 75%, & 100%), two tests shall be carried out for the calculation of air volume in the pipeline under test.

In case, during the hold pressure periods indicated above, a decrease in pressure is observed, the above operations shall not be repeated more than twice, after which the line shall not be considered capable of test, until the Contractor has isolated and eliminated the cause for the lack of water tightness.

8.11 AIR VOLUME CALCULATION.

Two separate consecutive pressures lowering of 0.5 bar shall be carried out after pressurizing to test pressure in order to check the presence of air in the pipeline.

For calculation of air in the pipeline the second pressure lowering shall be used, and the relevant drained water shall be accurately measured (V_1). This amount measured shall be compared to the theoretical amount (Vp) corresponding to the pressure lowering that has been carried out, by using the procedure outlined in clause 9.1 of this specification.

Copyright VCS Quality Services Private Limited – All rights reserved

If no air is present in the length under test, then $\frac{V1}{Vp} = 1$

In order that the above ratio is acceptable, it shall not differ by more than 6% (i.e. 1.06). If the air found in the pipeline is within the above established tolerance, then the pressurizing can continue. If the ratio VI / Vp exceeds 1.06, the hydrostatic testing cannot go on and additional pig passages shall be performed to remove the air pockets.

The test shall be repeated as per the above procedure until above estimated tolerances are satisfied. The pressurizing can then continue, to reach the value of the test pressure.

8.12 TESTING

The section shall be pressurized to the test pressure after the air volume test has given acceptable results. When temperature and pressure has stabilized, the injection pump, pressuring pump shall be disconnected and all connections at the test heads shall be checked for leakage. The test pressure shall be held for a minimum of 24 hours after stabilization. The pressure recorders shall then be started with the charts in a real time orientation for continuous recording throughout the test.

During the testing period the following measurements shall be recorded

- Pressure measurements from dead weight tester: Every hour
- Soil temperature and the pipe temperature at the thermocouples: Every two hours

All data shall be recorded on appropriate forms attached to the hydrostatic test procedure manual. Care shall be taken that the maximum test pressures are not exceeded. Bleed-off water shall be accurately measured and recorded.

8.13 MEASUREMENTS

8.13.1 WATER AMOUNT MEASUREMENT

The quantity of water added to the test section shall be measured during the filling stage through a positive displacement meter (a turbine meter may also be used).

The quantity of water added during pressurization shall be measured during the pressurization stages.

8.13.2 PRESSURE MEASUREMENT

Pressure shall be measured with a dead weight tester that shall permit readings with least count of 0.05 bar. The pressure shall also be recorded by means of a recording pressure gauge. The recording pressure gauge shall be checked by means of a dead weight tester at the beginning, during and at the end of the hydrostatic test.

Accuracy	:	± 0.1% of the full-scale value
Recording	:	Continuous on tape or disk, graph width 100mm

Copyright VCS Quality Services Private Limited – All rights reserved

Feed	:	20mm/h for tape diagrams, 15°/h for disk diagrams
Recording range	:	To be such as to record pressure between 50% and 90% of the diagram width.

8.13.3 TEMPERATURE MEASUREMENT

- Water temperature shall be taken at every 2 hours through the thermocouples that have been installed on the pipe wall along the section.

  In addition, the temperature measurement shall be taken during filling operation, thermal stabilization stage and during the pressure hold period.

  The thermocouples' sensitivity shall enable temperature readings with the accuracy of ±0.1°C.

- Water temperature shall also be measured at the pump delivery through a recording thermometer throughout the filling stage.

  The recording thermometer shall feature the following characteristics:

Accuracy	:	± 1% of the scale range
Scale	:	-10° to +40°C
Recording	:	Continuous on tape or disk, diagram width 100mm
Feed	:	20mm/h for tape diagrams, 15°/h for disk diagram

- Ground temperature shall be taken by measuring soil temperature at the thermocouples prior to starting the filling operation.
- Ambient temperatures shall be recorded from the beginning of pressurization to the end of the test by means of a recording thermometer.

Accuracy	:	± 1% of the scale range
Scale	:	0° to +60°C
Recording	:	Continuous on tape or disk, diagram width 100mm
Feed	:	20mm/h for tape diagrams, 15°/h for disk diagrams.

9.0 CALCULATIONS

9.1 The theoretical water amount that is necessary for filling the section to be tested shall be obtained from the geometrical volume of the section considering the pipe tolerances.

The theoretical water amount that is necessary for pressurizing the section shall be calculated by means of the following formula:

$$Vp = \left(0.884\frac{ri}{t} + A\right) X\ 10^{-6}\ X\ (Vt)\ X\ (\Delta P)\ X\ K$$

Where:

Vp = computed water amount required to raise by P the pressure in the section to be tested (m³)

Copyright VCS Quality Services Private Limited – All rights reserved

V_t = geometrical volume of the section (m^3)

ΔP = pressure rise (bar)

r_i = nominal inner radius of the pipe (mm)

t = nominal pipe thickness (mm)

A = Isothermal compressibility value for water at the pressurization temperature in the P range (bar^{-1}) x 10^6(Refer water compressibility factor v/s pressure and temperature charts. For temperature above 30°C the values may be extrapolated.)

K = A dimensionless coefficient that is equal to a value of 1.02 for longitudinally welded pipe.

9.2 The pressure change due to a water temperature change shall be calculated through the following formula:

$$\Delta P = \frac{B}{0.884\ \frac{r_i}{t} + A}\ \Delta T$$

Where:

ΔP = Pressure change resulting from a temperature change (bar)

ΔT = Algebraic difference between water temperature at the beginning of the test and water temperature as measured at the end of the test (°C).

B = Value of the difference between the thermal expansion of water at the pressure and temperature as measured at the end of the test and that of steel ($°C^{-1}$ x10^6) (Refer Table1)

A = Isothermal compressibility value of water as estimated at the pressure and temperature values obtained at the end of test (Refer Figure 1)

K = A dimensionless coefficient that is equal to a value of 1.02 for longitudinally welded pipe.

r_i = nominal inner radius of the pipe (mm)
(In case of the test section having multiple wall thicknesses, "ri" shall correspond to the wall thicknesses, having the maximum total length in the given test section.

t = nominal pipe thickness (mm)

10.0 ACCEPTANCE

10.1 The hydrostatic test shall be considered as positive if pressure has kept a constant value throughout the test duration, except for change due to temperature effects. Such changes shall be evaluated as described under clause 9.2 of this

Copyright VCS Quality Services Private Limited – All rights reserved

specification.

The pressure change value as a function of temperature change shall be algebraically added to the pressure value as read on the meters. The pressure value thus adjusted shall be compared with the initial value and the test shall be considered as acceptable if the difference is less than or equal to 0.3 bar. In case of doubt the testing period shall be extended by 24 hours.

10.2 If test section fails to maintain the specified test pressure after isolation, Contractor shall determine the location of leakage or failure by suitable means. All leaks and failures within the pipe wall or weld seams shall be repaired by replacement of entire joint or joints in which leakage or failure occurs. In those cases where leaks occur in circumferential welds, the method of repair shall be determined by the Company. Contractor shall comply with instructions of the Company whether to replace a section of the line pipe that includes the line leak or whether to repair the circumferential weld. This repair should, however, meet the requirements of applicable welding specification enclosed with the Contract. Where failures occur in pipeline field bends, bends shall be replaced with same degree of bends. After completion of repairs, the hydrostatic test shall be repeated in full, as per this specification.

10.3 The cost of repairs or replacements, followed by refilling and depressurizing the line, due to poor workmanship, shall be borne by the Contractor. In the event of leaks or failures resulting from faulty Company furnished materials, Contractor shall be reimbursed as per the provisions of Contract. All work of reinstalling line pipe, to replace failures, shall be done in accordance with the relevant specifications included in the CONTRACT.

10.4 Contractor shall haul and stockpile all damaged and defective pipes to storage location designated by the Company. All cracks and splits resulting from failure shall be coated with an application of grease to preserve the characteristics of failures from corrosion. Joint of failed pipes shall be marked with paint, with a tag indicating failure details, date and location of failure and pressure at which failure occurred. Failed pipes shall have pipe number and heat number clearly marked on the outside surface along with warning sign to prevent re-usage.

11.0 TERMINATION

After the positive result of testing and all the data have been gathered, the test shall be terminated upon written approval given by the Company. The pipeline shall be slowly depressurized at a moderate and constant rate as instructed by Company. Subsequent operations such as installation of sectionalizing valves, caliper pigging, swabbing, pre-commissioning checks, purging/ inertising and commissioning shall be carried out as per the relevant specifications.

11.1 All thermocouples installed in the pipeline shall be removed and damaged coating shall be repaired using Company approved materials and procedure.

11.2 Contractor shall dewater the tested line as per the following requirement after test acceptance.

Copyright VCS Quality Services Private Limited – All rights reserved

The dewatering shall be carried out by using four cup pigs and foam pigs driven by compressed air. The detailed dewatering procedure shall be deployed by the Contractor in such a way as to provide adequate control of pigs during dewatering. Pigs and equipment required for dewatering the line shall be furnished by Contractor and shall be approved in advance by the Company. Four cup pigs run shall be made through the line to displace the water. Foam pigs shall then be passed in order to complete the line dewatering. Contractor shall use a number of foam pigs each in different colors/ numbered for this purpose. The line shall be considered dewatered when a negligible amount of water is flushed out by the last foam pig and approval is given by the Company.

11.3 During dewatering, care shall be taken to properly dispose the discharging water in order to avoid pollution, damages to fields under cultivation and/ or existing structures and interference with the traffic. Before the start of dewatering and disposal of hydro test water, a procedure for treatment of inhibited water to prevent pollution shall be submitted by Contractor to Company for review and approval.

11.4 Upon completion of the testing and dewatering operation, any provisional traps/ headers for pigs and all other temporary installation relating to the test shall be removed. Subsequently, the individual sections of the line already tested shall be joined in accordance with the requirements of relevant specifications issued for the purpose.

12.0 TEST REPORT

A complete report signed by Contractor and the Company shall be submitted upon completion of the hydrostatic test for each test section.

This report shall contain as a minimum:

- Pressure at high and low elevations;
- Elevation & Pressure at test point;
- Water test certificate;
- Inhibitor test certificate;
- The cleaning, gauging, flushing, filling and testing procedures used;
- Schematic layout of cleaning, filling and testing facilities;
- Section Elevation Plot;
- Equipment’s and Instruments calibration certificate;
- A profile of the pipeline that shows the test sites, all instrument and injection connections;
- Pipe filling logs and records;
- Additive specification, required concentration and additive injection records;
- Pig specifications;
- Pig inspection records including photographs of the damages; records of gauging pig survey and photographs;
- Pressurization and stabilization records;
- Pressure and temperature recording charts with appropriate information

Copyright VCS Quality Services Private Limited – All rights reserved

inscribed thereon;

- Temperature data along the pipeline;
- Dead weight tester logs and recordings;
- Air volume calculations;
- Pressure Vs Volume plot
- Pressure change due to temperature change calculations;
- Environmental data;
- Depressurization logs and records;
- Dewatering procedure and schematic layout of relevant facilities; dewatering logs and records;
- Records and photographs of all leaks, if applicable.

13.0 PRESERVATION OF PIPELINE

When so stated in the CONTRACT, to preserve/ conserve the pipeline for a specified duration, Contractor shall completely fill the pipeline with water, with sufficient quantity of corrosion inhibitors depending upon quality of water and the period of conservation, at a pressure as per relevant specification/ Contract. Contractor shall obtain necessary approval from the Company of the procedure, type and quality and quantity of inhibitors used before commencement of the works.

14.0 PRECAUTIONS DURING THE TEST

In addition to all that has been expressly described in the procedures for carrying out the tests, the following additional requirements shall be complied with:

1. Provision shall be made for the installation of no-admittance signs to unauthorised personnel from the roads to the R.O.U.

2. Signs stating 'PIPE UNDER TEST-KEEP OFF" with local language translation shall be placed where the pipeline is uncovered, and particularly where the provisional traps and stations are located. Such areas shall be suitably fenced in such a way as to prevent access of unauthorised personnel. No unauthorised personnel shall be closer than 40M to the pipeline or equipment under test.

3. Provisional scraper traps shall be installed in compliance with methods and suitable location so that their rupture cannot cause any injuries to the personnel or third parties

4. The test station shall be placed in such a location as to prevent it from being affected by a catastrophic failure in the test head.

5. Once dewatering is over the sectionalising valves and other valve assemblies tested previously, shall be installed at locations shown in the drawings and in accordance with the procedures contained in the relevant specifications. All thermocouples installed in the pipeline shall be removed and damaged corrosion coating shall be repaired using Company approved materials and procedure.

Copyright VCS Quality Services Private Limited – All rights reserved

15.0 DOCUMENTATION

PRIOR TO COMMENCEMENT OF HYDROSTATIC TEST

The Contractor shall furnish the Hydrostatic Test Procedure at least six weeks prior to commencement of hydrostatic test operations for the approval of the Company Representative. Hydrostatic test operations shall commence only after obtaining written approval from Company.

Prior to commencement of the testing, copies of certifications, calibrations, etc of any equipment/ instrumentation to be incorporated in the test set-up shall be submitted to the Company Representative.

ON COMPLETION OF HYDROSTATIC TEST

The Contractor shall furnish the Test Report duly signed by both the Contractor and the Company Representative, immediately upon completion of successful hydrostatic test.

Copyright VCS Quality Services Private Limited – All rights reserved

TABLE 1: DIFFERENCE BETWEEN THE WATER THERMAL EXPANSION FACTOR AND THE STEEL THERMAL EXPANSION

FACTOR ($°C^{-1}$ x10^6)

°C bar	1	2	3	4	5	6	7	8
0.981	-98.62	-79.89	-61.81	-44.34	-27.47	-11.14	4.66	19.98
10	-95.55	-76.94	-58.99	-41.65	-24.89	-8.67	7.02	22.23
20	-92.15	-73.68	-55.86	-38.64	-22.01	-5.92	9.65	24.74
30	-88.74	-70.4	-52.72	-35.63	-19.14	-3.16	12.29	27.26
40	-85.32	-67.12	-49.58	-32.62	-16.24	-0.41	14.93	29.78
50	-81.9	-63.84	-46.43	-29.6	-13.36	2.36	17.57	32.31
60	-78.47	-60.55	-43.27	-26.58	-10.46	5.15	20.23	34.85
70	-75.03	-57.25	-40.1	-23.54	-7.56	7.92	22.89	37.89
80	-71.6	-53.96	-36.94	-20.51	-4.65	10.7	25.55	39.94
90	-68.16	-50.66	-33.77	-17.47	-1.73	13.5	28.23	42.5
100	-64.72	-47.35	-30.6	-14.43	1.18	16.29	30.9	45.05
110	-61.28	-44.05	-27.43	-11.38	4.1	19.08	33.58	47.67
120	-57.84	-40.74	-24.26	-8.34	7.02	21.88	36.26	50.18
130	-54.4	-37.44	-21.08	-5.29	9.95	24.68	38.94	52.75
140	-50.96	-34.13	-17.9	-2.25	12.87	27.49	41.63	55.32
150	-47.53	-30.83	-14.73	0.8	15.79	30.29	44.31	57.89
160	-44.1	-27.53	-11.56	3.85	18.72	33.1	47	60.46
170	-40.67	-24.23	-8.4	6.89	21.64	35.9	49.69	63.04
180	-37.24	-20.94	-5.23	9.94	24.56	38.7	52.37	65.62
190	-33.83	-17.65	-2.06	12.98	27.48	41.51	55.06	68.19
200	-30.42	-14.37	1.09	16.01	30.4	44.3	57.75	70.77
210	-27.02	-11.09	4.25	19.04	33.31	47.1	60.43	73.34
220	-23.63	-7.82	7.4	22.06	36.22	49.9	63.12	75.9
230	-20.24	-4.56	10.54	25.08	39.13	52.69	65.8	78.48
240	-16.87	-1.3	13.67	28.1	42.03	55.48	68.48	81.05
250	-13.5	1.94	16.79	31.11	44.92	58.26	71.15	83.61
260	-10.14	5.17	19.9	34.12	47.81	61.04	73.81	86.81
270	-6.8	8.39	23	37.11	50.69	63.8	76.48	88.73
280	-3.48	11.6	26.11	40.09	53.56	66.57	79.14	91.29
290	-0.17	14.8	29.19	43.07	56.43	69.33	81.78	93.83
300	3.13	17.98	32.27	46.03	59.29	72.08	84.83	96.38

Copyright VCS Quality Services Private Limited – All rights reserved

TABLE 1: DIFFERENCE BETWEEN THE WATER THERMAL EXPANSION FACTOR AND THE STEEL THERMAL EXPANSION

FACTOR ($°C^{-1}$ x10^6)

°C bar	9	10	11	12	13	14	15	
0.981	34.82	49.22	63.2	76.78	89.99	102.83	115.34	
10	36.97	51.26	65.15	78.64	91.75	104.51	116.93	
20	39.36	53.55	67.33	80.71	93.72	106.39	118.71	
30	41.76	55.84	69.51	82.79	95.7	108.26	120.49	
40	44.18	58.14	71.7	84.87	97.68	110.14	122.28	
50	46.6	60.45	73.9	86.96	99.68	112.04	124.07	
60	49.02	62.76	76.1	89.07	102.67	113.93	125.88	
70	51.44	65.08	78.32	91.17	103.68	115.84	127.69	
80	53.88	67.4	80.53	93.29	105.69	117.76	129.5	
90	56.32	69.73	82.75	95.41	107.7	119.67	131.32	
100	58.77	72.07	84.98	97.53	109.73	121.59	1333.15	
110	61.21	74.41	87.22	99.66	111.75	123.52	134.98	
120	63.67	76.74	89.45	101.79	113.79	125.46	136.82	
130	66.12	79.09	91.69	103.93	115.83	127.39	138.67	
140	68.58	81.45	93.93	106.07	117.87	129.34	140.51	
150	71.05	83.8	96.18	108.21	119.9	131.2	142.37	
160	73.51	86.15	98.43	110.36	121.96	133.74	144.22	
170	75.97	88.51	100.68	112.51	124.01	135.19	146.08	
180	78.44	90.87	102.94	114.66	126.06	137.15	147.94	
190	80.91	93.23	105.19	116.82	128.12	139.11	149.81	
200	83.37	95.59	107.45	118.97	130.17	141.07	151.68	
210	85.84	97.95	109.71	121.13	132.24	143.03	153.55	
220	88.3	100.31	111.97	123.29	134.29	144.99	155.42	
230	90.67	102.67	114.23	125.45	136.36	146.96	157.3	
240	93.22	105.03	116.48	127.6	138.42	148.93	159.18	
250	95.69	107.39	118.74	129.76	140.48	150.9	167.05	
260	98.14	109.74	121	131.92	142.54	152.87	162.93	
270	100.6	112.1	123.25	134.08	144.61	154.84	164.81	
280	103.05	114.44	125.5	136.24	146.67	156.84	166.69	
290	105.5	116.79	127.75	138.39	148.73	158.78	168.57	
300	107.94	119.13	130	140.54	150.79	160.75	170.45	

Copyright VCS Quality Services Private Limited – All rights reserved

TABLE 1: DIFFERENCE BETWEEN THE WATER THERMAL EXPANSION FACTOR AND THE STEEL THERMAL EXPANSION

FACTOR ($^{\circ}C^{-1}$ x10^{6})

°C bar	16	17	18	19	20	21	22	23
0.981	127.52	139.41	151	162.3	173.37	184.18	194.75	205.08
10	129.02	140.83	152.36	163.6	174.56	185.3	195.79	206.07
20	130.71	142.42	153.85	165	175.9	186.55	196.96	207.16
30	132.4	144.02	155.35	166.4	177.23	187.8	198.14	208.26
40	134.1	145.62	156.87	167.9	178.58	189.07	199.33	209.37
50	135.8	147.24	158.39	169.3	179.93	190.34	200.52	210.49
60	137.51	148.86	159.92	170.7	181.29	191.62	201.72	211.61
70	139.22	150.49	161.46	172.2	182.66	192.91	202.93	212.74
80	140.95	152.11	163	173.6	184.03	194.2	204.14	213.88
90	142.67	153.75	164.56	175.1	185.41	195.5	205.36	215.03
100	144.42	155.4	166.11	176.6	186.8	196.8	206.59	216.17
110	146.15	157.04	167.66	178.1	188.2	198.12	207.82	217.33
120	147.9	158.7	169.24	179.5	189.59	199.44	209.06	218.49
130	149.65	160.36	170.81	181	191	200.75	210.31	219.66
140	151.4	162.03	172.39	182.5	192.41	202.09	211.56	220.84
150	153.16	163.7	173.98	184	193.82	203.42	212.81	222.02
160	154.93	165.37	175.56	185.5	195.24	204.76	214.08	223.2
170	156.69	167.05	177.15	187	196.66	206.1	215.34	224.39
180	158.47	168.73	178.75	188.5	198.09	207.45	216.61	225.58
190	160.24	170.42	180.35	191.1	199.52	208.8	217.89	226.79
200	162.01	172.1	181.95	191.6	200.97	210.16	219.17	227.99
210	163.8	173.8	183.55	193.1	202.4	211.53	220.46	229.2
220	165.58	175.49	185.16	194.6	203.85	212.89	221.74	230.41
230	167.36	177.19	186.78	196.1	205.3	214.26	223.04	231.63
240	169.16	178.89	188.39	197.7	206.75	215.63	224.32	232.85
250	170.94	180.59	190.01	199.2	208.2	217	225.63	234.08
260	172.73	182.3	191.63	200.8	209.66	218.4	226.93	235.31
270	174.53	184	193.25	202.3	211.12	219.77	228.24	236.54
280	176.32	185.7	194.88	203.8	212.59	221.16	229.55	237.77
290	178.11	187.42	196.5	205.4	214.05	222.54	230.86	239.01
300	179.9	189.13	198.13	206.9	215.51	223.93	232.18	240.26

Copyright VCS Quality Services Private Limited – All rights reserved

TABLE 1: DIFFERENCE BETWEEN THE WATER THERMAL EXPANSION FACTOR AND THE STEEL THERMAL EXPANSION

FACTOR ($^{\circ}C^{-1}$ x10^{6})

°C bar	24	25	26	27	28	29	30	
0.981	215.2	215.14	234.88	244.41	253.79	263	272.03	
10	216.1	225.99	235.66	245.13	254.44	263.59	272.57	
20	217.2	226.94	236.53	245.94	255.18	264.27	273.18	
30	218.2	227.88	237.41	246.75	255.93	264.95	273.8	
40	219.2	228.85	238.3	247.58	256.69	265.64	274.42	
50	220.3	229.82	239.2	248.4	257.45	266.33	275.07	
60	221.3	230.79	240.11	249.24	258.22	267.04	275.7	
70	222.4	231.78	241.02	250.08	258.99	267.75	276.35	
80	223.4	232.77	241.94	250.93	259.78	268.47	277.01	
90	224.5	233.76	242.87	251.79	260.57	269.19	277.66	
100	225.6	234.76	243.79	252.66	261.36	269.92	278.33	
110	226.6	235.78	244.73	253.53	262.17	270.77	279.01	
120	227.7	236.79	245.68	254.4	262.98	271.41	279.69	
130	228.8	237.81	246.63	255.28	263.69	272.16	280.38	
140	229.9	238.84	247.59	256.18	264.62	272.92	281.08	
150	231	239.87	248.55	257.07	265.44	273.69	281.78	
160	232.1	240.91	249.52	257.97	266.28	274.46	282.49	
170	233.3	241.96	250.49	258.88	267.12	275.23	283.2	
180	234.4	243.01	251.47	259.79	267.97	276.01	283.92	
190	235.5	244.06	252.46	260.71	268.82	276.8	284.64	
200	236.6	245.12	253.45	261.63	269.67	277.59	285.37	
210	237.8	246.18	254.45	262.5	270.54	278.39	286.11	
220	238.9	247.26	255.45	263.49	271.4	279.19	286.85	
230	240.1	248.33	256.46	264.43	272.28	280	287.59	
240	241.2	249.41	257.46	265.37	273.16	280.82	288.35	
250	242.4	250.49	258.48	266.31	274.04	281.63	289.11	
260	243.5	251.58	259.49	267.27	274.92	282.46	289.86	
270	244.7	252.66	260.52	268.23	275.82	283.29	290.64	
280	245.8	253.76	261.54	269.18	276.71	284.12	291.4	
290	247	254.86	262.57	270.15	277.61	284.95	292.18	
300	248.2	255.96	263.6	271.11	278.51	285.79	292.95	

Copyright VCS Quality Services Private Limited – All rights reserved

FIGURE – 1

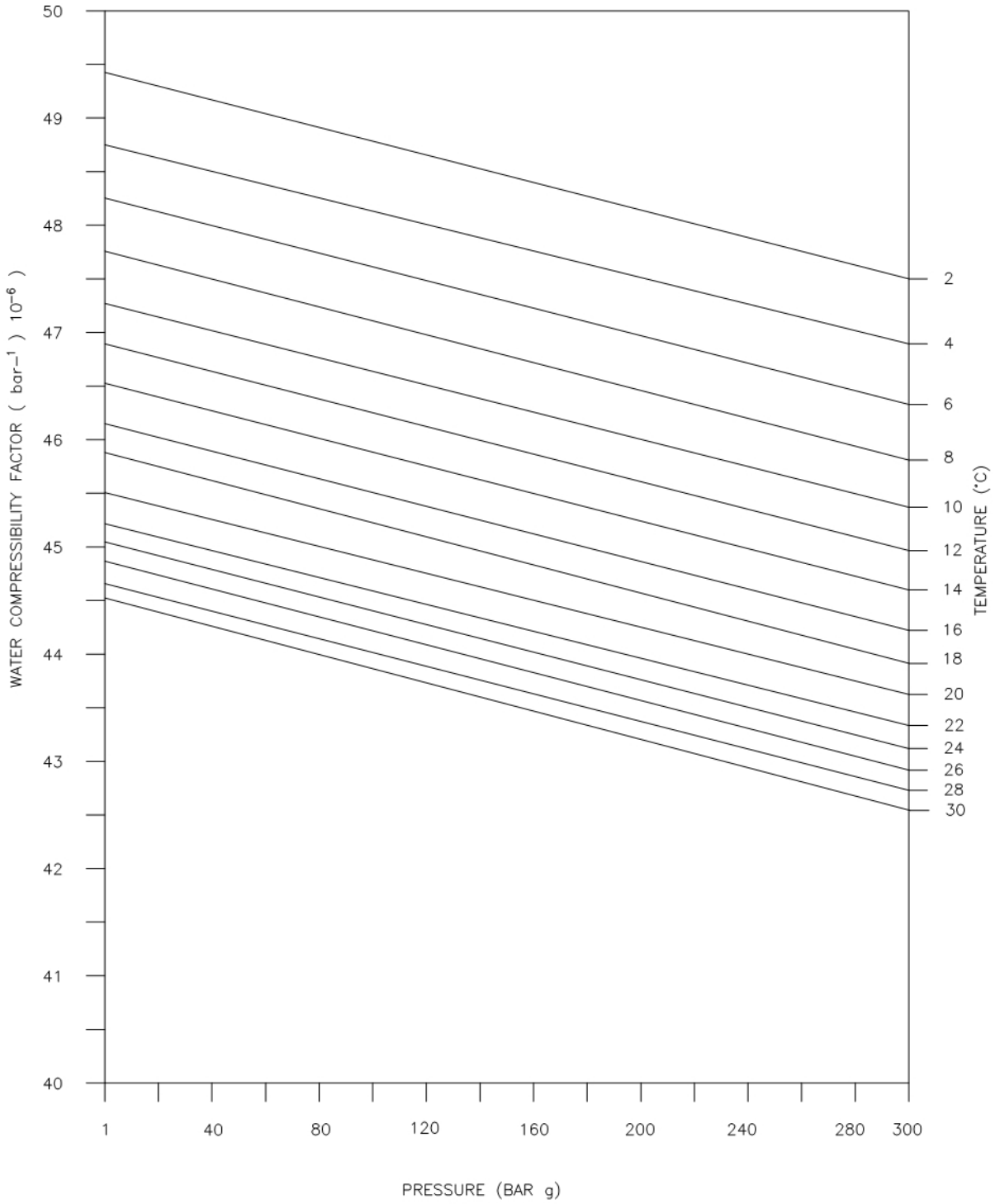

FIG. 1- WATER COMPRESSIBILITY FACTOR v/s PRESSURE AND TEMPERATURE

Copyright VCS Quality Services Private Limited – All rights reserved

ENERGISING QUALITY

VCS QUALITY SERVICES PVT. LTD.

STANDARD SPECIFICATION
FOR
PIPELINE MARKERS

VPC – SS – PP - 2015

Rev. No	Date	Prepared By	Checked By	Approved By	Authorized By
01	28.11.2019	MB	AK	AD	SK
00	12.10.2017	CM	SM	AD	SK

UNCONTROLLED COPY	:	If printed
CONTROLLED COPY	:	If in soft and signed

Copyright VCS Quality Services Private Limited – All rights reserved

REVISION RECORD						
Rev.	**Revision Date**	**Prepared by**	**Checked by**	**Approved by**	**Authorized by**	**Revision Description**
00	12.10.2017					Revised as Marked
		CM	SM	AD	SK	
01	28.11.2019					Revised as Marked
		MB	MC	AD	SK	
02	03.01.2022					Revised as Marked
		SR	MC	HK	HK	

Copyright VCS Quality Services Private Limited – All rights reserved

ABBREVIATIONS:

API	American Petroleum Institute.
ASME	American Society of Mechanical Engineers.

Copyright VCS Quality Services Private Limited – All rights reserved

CONTENTS

1.0 SCOPE 5
2.0 REFERENCE 5
3.0 GENERAL 5
4.0 KILOMETER MARKERS 5
5.0 AERIAL MARKER 6
6.0 PIPELINE WARNING SIGN 6
7.0 ROU BOUNDRY MARKER 6
8.0 DIRECTION MARKERS 7
9.0 NAVIGABLE WATERWAY PIPELINE CROSSING WARNING SIGN 7
10.0 SPECIAL MARKERS 7

Copyright VCS Quality Services Private Limited – All rights reserved

1.0 SCOPE

1.1 This specification covers the minimum requirements of supply, fabrication and erection of pipeline markers to be installed by contractor at various locations along the proposed pipeline route of onshore pipelines carrying gas or liquid. The markers and signs may contain information to be used by the public when reporting emergencies and seeking assistance in determining precise location of a buried pipeline.

2.0 REFERENCE

The latest edition (edition in force at the time of issue of enquiry) of following additional references are included in this specification.

AMERICAN SOCIETY OF MECHANICAL ENGINEERS (ASME)

B31.4	:	Pipeline Transportation Systems for Liquids and Slurries.
B 31.8	:	Gas Transmission and Distribution Piping Systems.

AMERICAN PETROLEUM INSTITUTE (API)

RP 1109	:	Recommended practice for Marking Liquid petroleum pipeline facilities.

3.0 GENERAL

3.1 Contractor shall supply, fabricate, install and paint the Pipeline Markers along the pipeline route. The location of markers as indicated in the approved drawings shall be treated for guidance purpose only and the exact location of the markers shall be as per requirement stipulated in this specification and as directed by the company. All the markers shall be painted in accordance with the requirement of relevant standard specification for shop and field painting.

3.2 The pipeline markers shall be fabricated and installed in accordance with VCS standard drawings included herein. Before start of fabrication of markers, the Contractor shall prepare and submit for company's approval, the detailed scheme for the marker plates as applicable for the project.

3.3 The pipeline markers shall be installed, as far as possible, to minimize hindrance to the regular use of land traffic.

3.4 The line marker's message should be presented on strong, durable material, finished to resist the effects of exposure and vandalism.

4.0 KILOMETER MARKERS

Kilometer Markers shall be installed along the pipeline at every one-kilometer interval. Markers shall indicate cumulative chainage in kilometers from the reference station, in the direction of flow. A kilometer marker is not required in the following locations:

Copyright VCS Quality Services Private Limited – All rights reserved

1. If the relative length between the location and any pipeline warning sign is less than 200 meters.
2. Every five Kilometers where Areal Markers are installed.
   For Kilometer Marker details refer VCS Standard Drawing

5.0 AERIAL MARKER

Aerial Marker shall in general be installed along the pipeline at every five (5) kilometers intervals and at places specified by the company. For Aerial Marker details refer VCS Standard Drawing.

6.0 PIPELINE WARNING SIGN

The pipeline crossing & pipeline facilities such as stations, terminals, valves, metering or pipeline junction manifolds should be marked with appropriate signs. Pipeline Warning Signs shall in general be installed at the following locations. Caution should be used when installing a marker anywhere other than directly over or in proximity to the buried pipeline to avoid any possible misinterpretation as to where the actual pipeline is located.

National and State Highway Crossings (at both ends)	2 Nos. min.
Other Road Crossings	1 No. min.
Railway Crossings (at both ends)	2 Nos. min.
Minor Water Crossings(less than 15 meter width)	1 No. min.
Minor Water Crossings (above 15 meter width)	2 Nos. min.
Major Water Crossings (at both ends)	2 Nos. min.
Valve Station / TOP / HOV's	1 No. min.
Any other location as shown in the approved drawings and as directed by the company.	

Pipeline warning sign shall indicate the pressure & pipeline facility and display the name of the Company with an emergency telephone number. For Pipeline Warning Sign details refer VCS Standard Drawing..

7.0 ROU BOUNDRY MARKER

Right of Use Boundary Markers shall be fabricated as per the drawings and shall be installed at every 250 meters interval along the entire pipeline route. These shall be installed on either side of the pipeline alignment to define the ROU boundary limits. These shall also be installed at pipeline turning points to maintain the continuity of the ROU limits. Due care shall be taken while installing ROU boundary marker. Boundary marker shall be preferably installed at the boundary of farmer plot as applicable, so that it does not get displaced during course of time. For ROU Marker details refer VCS Standard Drawing..

Copyright VCS Quality Services Private Limited – All rights reserved

8.0 DIRECTION MARKERS

Direction Markers shall be installed to identify the significant Turning Points of the pipeline during aerial traverse, where there is change of pipeline direction. One direction marker shall be installed at such Turning Point; two more direction markers shall be installed along the pipeline alignment, one on either side of the Turning Point at 200 m from the Turning Point. For Direction Marker fabrication details refer VCS Standard Drawing.

9.0 NAVIGABLE WATERWAY PIPELINE CROSSING WARNING SIGN

The Navigable Waterway Pipeline Crossing Warning Sign shall be fabricated and installed one on each bank of navigable water courses at the pipeline crossing location, in lieu of the Pipeline Warning Sign should contain the words "Do not Anchor or Dredge". For Warning Sign fabrication details refer VCS Standard Drawing..

10.0 SPECIAL MARKERS

As directed by Company, Special Markers shall be installed at location where following changes take place:

a) Change in pipeline diameter and wall thickness.
b) Change in type of pipe.
c) Change in class locations for pipelines (in case of gas pipelines)

The above data may be provided on other types of marker (except ROU boundary marker), if the relative distance between the two does not exceed 100 m.

Copyright VCS Quality Services Private Limited – All rights reserved

ENERGISING QUALITY

VCS QUALITY SERVICES PVT. LTD.

STANDARD SPECIFICATION
FOR
CASING INSULATORS AND END SEALS

VPC – SS – PP - 2016

02	03.01.2022	SR	MC	HK	HK
Rev. No	**Date**	**Prepared By**	**Checked By**	**Approved By**	**Authorized By**

UNCONTROLLED COPY	:	**If printed**
CONTROLLED COPY	:	**If in soft and signed**

Copyright VCS Quality Services Private Limited – All rights reserved

REVISION RECORD						
Rev.	**Revision Date**	**Prepared by**	**Checked by**	**Approved by**	**Authorized by**	**Revision Description**
00	23.06.2017					Document formatting, Cover Page, Doc numbering updated from SS-PL-019 to VPC-SS-PL-0019 keeping revision number same.
		AS	SM	AD	SK	
01	28.01.2020					Document numbering updated from VPC-SS-PL-0019 to VPC-SS-PP-2016
		MB	MC	AD	SK	
02	03.01.2022					Revised as Marked
		SR	MC	HK	HK	

Copyright VCS Quality Services Private Limited – All rights reserved

ABBREVIATIONS:

ASME	American Society of Mechanical Engineers
ASTM	American Society of Testing of Materials
API	American Petroleum Institute

Copyright VCS Quality Services Private Limited – All rights reserved

CONTENTS

1.0 SCOPE 5
2.0 REFERENCE DOCUMENTS 5
3.0 FUNCTIONAL REQUIREMENTS 6
4.0 DESIGN AND MANUFACTURE 6
5.0 MATERIAL PROPERTIES 8
6.0 INSPECTIONS AND TESTING 8
7.0 INSTALLATION 9

Copyright VCS Quality Services Private Limited – All rights reserved

1.0 SCOPE

This specification covers the minimum requirements of design, material, manufacture and supply of casing insulators and end seals intended to be used for cased pipeline crossings forming part of buried onshore pipeline.

This specification shall be read in conjunction with the condition of all specifications and documents include in the contract between company and contractor.

2.0 REFERENCE DOCUMENTS

The design, materials, fabrication, inspection, testing and supply of casing insulators and end seals shall comply with the latest edition of the following codes and standards.

AMERICAN SOCIETY OF MECHANICAL ENGINEERS (ASME)

B31.4 : Pipeline Transportation System for Liquids and Slurries

B 31.8 : Gas Transmission and Distribution Piping Systems.

AMERICAN PETROLEUM INSTITUTE (API)

1102 : Steel Pipeline Crossing Railroads and Highways

PNGRB REGULATIONS:

G.S.R 808(E) T4S : Regulations for Natural Gas Pipelines

G.S.R. Infra/ T4S/ P&PPL : Regulations for Petroleum and Petroleum products pipelines

G.S.R. 612(E) T4S : Regulations for CGD Network

COMPANY STANDARD SPECIFICATIONS

Following Company specifications shall form integral part of this specification and shall be complied with when applicable to the works covered in the contract.

VPC-SS-PP-2001: Standard Specification for Pipeline Construction (Onshore)

VPC-SS-PP-2002: Specification for Construction of Pipelines Crossing Roads, Railroad and Minor Water Crossing

In case of conflict between various requirements of this specification and reference standards and regulations mentioned above, more stringent requirement shall apply unless otherwise agreed by Purchaser.

Copyright VCS Quality Services Private Limited – All rights reserved

3.0 FUNCTIONAL REQUIREMENTS

3.1 CASING INSULATORS

Pipeline insulators shall be capable to support the carrier pipe inside the casing pipe and shall electrically isolate the carrier pipe from the casing pipe at the cased crossings.

The casing insulators shall be made of injection molded high density polyethylene or other equivalent or superior material and shall meet the following properties:

- Resist mechanical damage while being pulled into the casing.
- Have high compressive strength in order to ensure a permanent support to the carrier pipe.
- Have high electrical insulating value and low water absorption, thus preventing leakage and maintain-electrical isolation between carrier and casing pipes.
- Resist cold flow and do not soften at design temperature.
- Resist corrosion.
- Have low friction, to offer less resistance to carrier pipe movement.

PROPERTIES OF CASING INSULATORS

The material shall meet the following specifications:

Property	Value	ASTM Test Method
Dielectric strength	450-500 Volts/Mil	D-149
Compressive strength	3200 psi	D-695
Tensile strength	3100-5000 psi	D-638, D-651
Impact strength	4.0 ft.1b./inch of notch	D-256
Water Absorption	0.01%	D-570

3.2 CASING END SEALS

Casing end seals are intended to be used for sealing the annular space between casing pipe and carrier pipe at casing ends so as to prevent ingress of moisture and water.

The casing end seals shall be made of heat shrink high density radiation cross linked polyethylene with an adhesive having a melt point suitable for the pipeline service temperature and ambient temperature likely to be encountered during construction. End seals material shall be resistant to heat, cold, vibration, impact, abrasion, corrosive fluids, disbandment, organic and bio-deterioration. Manufacturer shall confirm compatibility of end seals with carrier pipe coating.

4.0 DESIGN AND MANUFACTURE

4.1 CASING INSULATOR

The arrangement of insulator shall be generally in accordance with Fig. 1.0. It shall be made in segments duly held together with cadmium plated bolts and nuts, to be supplied

Copyright VCS Quality Services Private Limited – All rights reserved

with casing insulators.

The number of segments shall be two for pipe diameters up to DN 300 mm (12"). For larger diameter, the number of segments may be more than two, but their number shall be kept minimum.

As an alternate design in accordance with the casing insulator element shall be a flexible section containing a toothed male butt strap at one end and an appropriately toothed female slot on the other end. The same shall be wrapped over the outer surface of the carrier pipe and locked positively. The insulator rings should be fastened onto the carrier pipe with the appropriate tool to be provided by the casing insulator manufacturer. No metallic parts or attachments should be considered in the casing insulator element assembly. The design of casing insulator should allow for onsite adjustments for any variances within the allowable O.D. range of pipeline and should grip the pipe firmly without any chances of horizontal movement or breakage of the insulator rings during installation.

The skid height shall be such that it is slightly less than the value obtained by following formula:

$$\frac{\text{Casing Internal Dia} - \text{Carrier Outer Dia}}{2}$$

Manufacturer shall obtain prior approval from OWNER on casing insulators drawings/design.

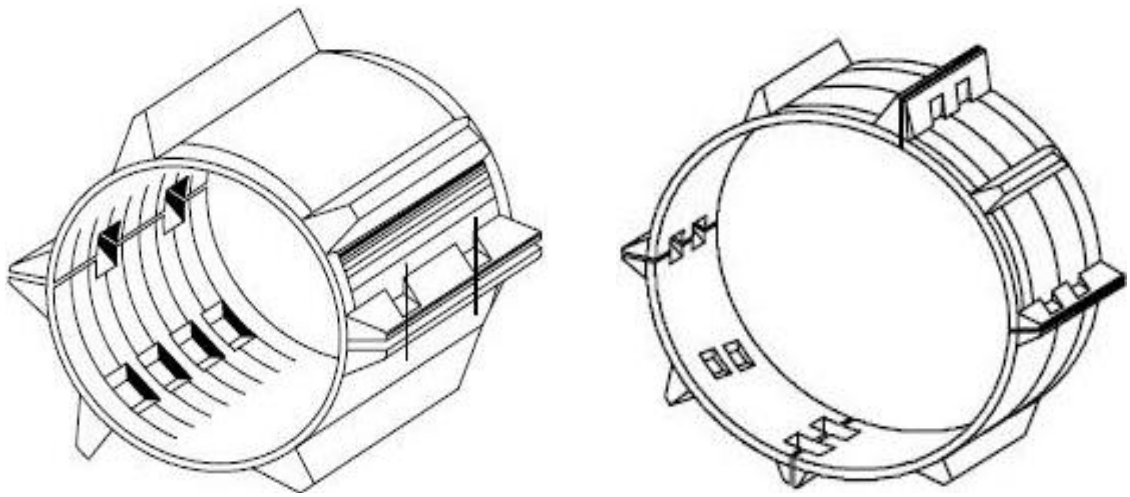

TWO PIECE CONSTRUCTION FOUR PIECE CONSTRUCTION

Fig 1.0 TYPICAL DETAILS OF CASING INSULATORS

Copyright VCS Quality Services Private Limited – All rights reserved

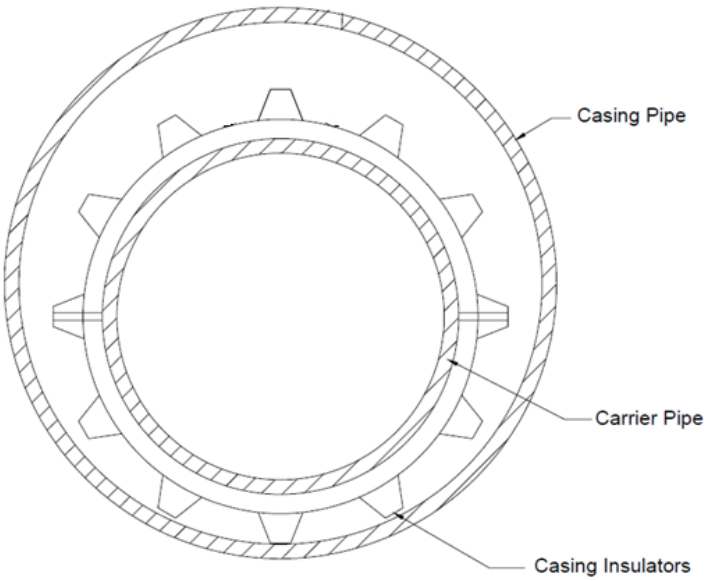

Fig 2.0 TYPICAL SKETCH OF CASING INSULATOR AND CASING PIPE

4.2 CASING END SEALS

The seals shall be suitable for the casing and carrier pipe diameters as applicable for each case. The casing end seal shall be flexible to cater for the expansion and contraction of carrier and casing pipes and shall be able to tolerate both angular and concentric misalignment of casing pipe without loss of sealing efficiency.

When HDPE ducts for OFC are also to be installed in the same casing pipe, the contractor shall install casing end seal in such a manner as to completely seal off the void between carrier pipe and HDPE ducts for OFC. Care shall be taken during installation of casing end seals so that after installation of casing end seals, neither HDPE ducts nor casing end seals are distorted or damaged.

The design of the casing end seals shall permit easy installation of the seal to the cased pipeline crossing.

It shall provide moisture proof seals when installed for the entire anticipated life of the burned pipeline.

Manufacturer shall obtain prior approval from OWNER on casing end seals design/drawings.

5.0 MATERIAL PROPERTIES OF CASING END SEALS

Casing end seals shall meet following minimum property requirements:

a. BACKING (SLEEVE AND CLOSURE PATCH)

Property	Minimum Value	ASTM Test Method
Tensile strength	2200 psi	D 638

Copyright VCS Quality Services Private Limited – All rights reserved

Ultimate Elongation	400 %	D 638
Heat Shock	No Visual Cracks, Flow or Drips at 250°C, 4 hours	D 2671

b. ADHESIVE

Property	**Minimum Value**	**ASTM Test Method**
Ring and Ball Softening Point	90°C	E 28
Lap Shear	60°C - 25 psi 23°C - 250 psi (2 inch/min.)	D 1002

c. SYSTEM (AS APPLIED)

Property	**Minimum Value**	**ASTM Test Method**
Peel strength (To casing and carrier pipe and closure patch)	5 pli (10 inch/min.)	D 1000

6.0 INSPECTION AND TESTING

Manufacturer/contractor shall furnish material test certificates of the components used in the assembly of casing insulators and end seal as per the requirements of clause 4.0 of this specification.

The manufacturer/contractor shall replace, at no extra cost, any material not conforming to the material and performance requirements of this specification.

Manufacturer/contractor shall submit detailed specification of the materials used in the assemblies, along with instructions for handling, use and installation of the material for OWNER approval prior to procurement.

7.0 INSTALLATION

Casing insulators shall be installed on carrier pipe at spacing as recommended by manufacturer but in no case greater than. At both ends of cased crossing a set of two insulators shall be installed with outermost insulator at a maximum distance of mm from end. Figure 3.0 shows arrangement of casing insulators inside the casing pipe. All other requirements of installation shall be as per standard.

Copyright VCS Quality Services Private Limited – All rights reserved

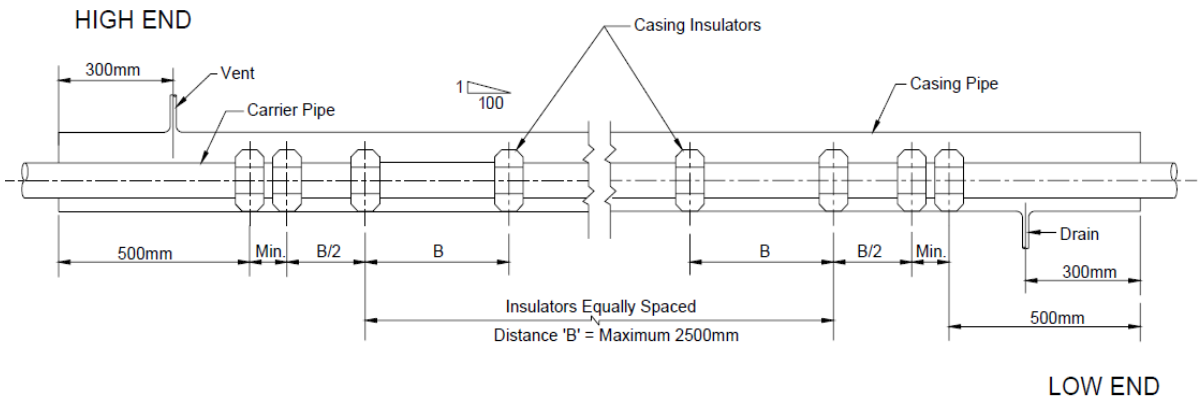

Fig 3.0 ARRANGEMENT OF CASING INSULATORS ON CARRIER PIPE

Copyright VCS Quality Services Private Limited – All rights reserved

ENERGISING QUALITY

VCS QUALITY SERVICES PVT. LTD.

STANDARD SPECIFICATION

FOR
DETAILED PIPELINE ROUTE SURVEY

VPC – SS – PP - 2017

02	28.01.2020	MB	MC	AD	SK
Rev. No	**Date**	**Prepared By**	**Checked By**	**Approved By**	**Authorized By**

UNCONTROLLED COPY	:	**If printed**
CONTROLLED COPY	:	**If in soft and signed**

Copyright VCS Quality Services Private Limited – All rights reserved

REVISION RECORD						
Rev.	**Revision Date**	**Prepared by**	**Checked by**	**Approved by**	**Authorized by**	**Revision Description**
00	23.06.2017					Issued as Standard specification
		AS	SM	AD	SK	
01	23.11.2018					Revised and Re-issued
		MD	MC	AD	SK	
02	28.01.2020					Formatting, Cover page, Document numbering updated from VPC-SS-PL-0007 / SS-PL-007 to VPC-SS-PP-2017
		MB	MC	AD	SK	

Copyright VCS Quality Services Private Limited – All rights reserved

ABBREVIATIONS:

ASME	American Society of Mechanical Engineers
ASTM	American Society of Testing of Materials
API	American Petroleum Institute
OISD	Oil Industry Safety Directorate

Copyright VCS Quality Services Private Limited – All rights reserved

CONTENTS

1.0 SCOPE 5
2.0 REFERENCE CODES, STANDARDS AND SPECIFICATIONS 5
3.0 REQUIREMENTS 5
4.0 SURVEY NOTES, OBSERVATIONS AND COMPUTATIONS 6
5.0 DOCUMENTATION 7

APPENDIX-A PIPELINE ROUTE CENTRELINE SURVEY
APPENDIX-B DETAILED ROUTE SURVEY
APPENDIX-C SOIL INVESTIGATION SURVEY
APPENDIX-D POPULATION DENSITY SURVEY
APPENDIX-E CADASTRAL SURVEY

ANNEXURE-I PIPELINE ROUTE SURVEY DATA SHEET
ANNEXURE-II SAMPLE FORMATS

Copyright VCS Quality Services Private Limited – All rights reserved

1.0 SCOPE

This specification covers the minimum requirements for various type of surveys required to be carried out for an onshore pipeline. The requirements for surveys and investigations related to locating pipeline route centerline, dumpsites and intermediate station/ terminal facilities on ground, obtaining topographic features, ground profile and soil data along the pipeline route; collection of revenue maps/ data and preparation of cadastral maps for ROU/ Land acquisition purposes; collection of population density data along the pipeline route are specified in this specification.

The specification also covers requirements related to construction of survey monuments, field measurements and presentation of survey data including preparation of maps, drawings, documents and reports.

2.0 REFERENCE CODES, STANDARDS AND SPECIFICATIONS

Reference has been made in this specification to the latest edition (edition enforce at the time of floating the enquiry) of the following codes.

AMERICAN SOCIETY OF MECHANICAL ENGINEERS (ASME)

B31.4	:	Pipeline Transportation system for liquid Hydrocarbon & other liquids.
B31.8	:	Gas Transmission and Distribution Piping Systems.
OISD 226	:	Natural gas Transmission Pipelines and city gas distribution network.
OISD 141	:	Design and Construction requirements for cross country hydrocarbon pipelines

3.0 REQUIREMENTS

3.1 All survey works shall be performed by and/ or under the direct supervision of a qualified land Surveyor.

All survey work shall be carried out using modern and well-maintained survey equipments/ instruments such as DGPS, GPS, EDM, Total Station, Theodolite, Inclinometers and any other equipments/ instruments deemed necessary for completion of works as per this specification.

3.2 Following type of surveys are covered under this specification:

i) Pipeline route centerline survey as per Appendix-A

ii) Detailed pipeline route survey as per Appendix-B

iii) Soil investigation surveys as per Appendix-C

iv) Population density survey as per Appendix-D

v) Cadastral survey as per Appendix-E

Copyright VCS Quality Services Private Limited – All rights reserved

Specific requirements of surveys for a particular Project shall be as indicated in Contract.

3.3 Normally detailed route survey shall be carried out after centerline survey has been completed and the pipeline route established on ground has been accepted by the Company. In case the pipeline route has already been identified by the Company and/ or the centerline survey is not required to be carried out by the survey contractor, the Surveyor shall make himself fully aware of the general conditions of the terrain along the pipeline route prior to start of survey work.

3.4 In case, the pipeline for which the route survey is proposed to be carried out is to be used for transportation of hydrocarbons in gaseous phase, the population density survey shall be carried out as per Appendix-D of this specification.

3.5 All major crossings and routing in critical areas shall be finalized by Surveyor in consultation with Company Representative. Company may depute its representative during the survey work to assist the contractor in finalizing such location at its sole discretion.

3.6 The Surveyor shall avoid major deviations from identified/ established route during detailed survey. Any such major deviation must be approved by Company representative.

Surveyor shall clearly specify reasons for such deviations while submitting his proposal for change in route.

3.7 When so specified in contract document the Surveyor shall locate dump site(s), for storage of line pipe and other pipeline materials, along pipeline route.

Unless specified otherwise in data sheet/ contract document the dumpsite(s) shall be located at 75-100 km interval and shall have an area of 5 - 10 hectares.

Following aspects shall be taken into account while selecting dumpsite location(s):

a. Dumpsite should preferably be a barren land free from water logging/ low lying areas.

b. The site shall be located in close proximity of identified/ established route.

c. It should be in the vicinity of National/ State Highway.

d. The site should be nearly flat with minimum undulation that might require earth work (fill-up and earth-cutting).

e. Site should not be under overhead power lines.

f. Site should preferably be on government land.

4.0 SURVEY NOTES, OBSERVATIONS AND COMPUTATIONS

4.1 The procedures followed both for field and office calculations shall be such that the results obtained shall be maintained by surveyor.

4.2 All up-to-date notes and observations related to the basis for determination of boundary lines and corners shall be maintained by surveyors.

4.3 Survey records must contain schematic diagrams of all horizontal controls pertinent to the project showing all existing and established control points, bench marks, any triangulation station and boundary lines.

Copyright VCS Quality Services Private Limited – All rights reserved

4.4 Geo-graphical and UTM co-ordinates of all Turning Points and starting/ end points of the pipeline shall be computed and furnished to the Company Representative.

5.0 DOCUMENTATION

5.1 MAPS & DRAWINGS

All maps and drawings shall be made using standard formats enclosed with this specification. The Surveyor shall perform all mapping and drawing work so as to contain all relevant data consistent with the survey notes and observations according to Cl. No. 3.0. The drawings shall also contain details of roads, streets, highways, structures, all types of crossings, terrain, surface vegetation and all other details which will be required for the purpose of engineering design. The type of drawings and maps to be prepared shall be as per requirements specified under Appendix-A to Appendix-E.

5.2 REPORTS

The reports to be prepared by Surveyor shall be exhaustive and shall contain all relevant information. The report shall describe in brief the survey methodology adopted, equipment used and tests (if required) conducted for obtaining the details/ data presented in the report. The final results/ conclusion shall be based on sound practices and detailed analysis of the data collected. The report must include recommendations as applicable for the Company's consideration.

5.3 DRAWING/ DOCUMENT SUBMISSION

All drawings and document shall be prepared using computers. Hard copies and soft copies of all required drawings and documents shall be submitted to Company for review/ approval. The Company shall review and comment, if any, shall be passed on to the Surveyor. The Surveyor shall incorporate all comments, including carrying out fresh field works/ laboratory testing (when required) and revise the drawing/ document to entire satisfaction of Company. Number/ sets of hard copies and soft copies of each drawing and document (submitted for review/ comments by Company) shall be as indicated in Contract.

Once the drawings/ documents have been reviewed by the Company and updated by surveyor to entire satisfaction of Company, the Surveyor shall submit entire documentation (drawings, maps, reports etc.) both in hard copy as well as soft copies for Company's records (number of copies as specified in Contract). All hard copies shall be signed and stamped by Surveyor. All drawings/ reports/ formats etc. submitted to the Company shall be prepared on electronic media. All drawings/ sketches shall be prepared using Auto CAD release 2006 or above. All reports and write-ups shall be in Microsoft Office software. All photographs shall be in JPG/ TIF format. Whenever data base is used for presentation of data (population density, ground profile etc.), the same shall be prepared in Access Data Base Software using Microsoft Office release 2006 or above. Final approved survey data/ documents shall be submitted to Company on CD ROMs.

Copyright VCS Quality Services Private Limited – All rights reserved

APPENDIX-A

PIPELINE ROUTE CENTRELINE SURVEY

1.0 OBJECTIVE

The objective of the centerline survey work is

i) Physical verification of the identified route and confirm its suitability for pipeline construction.

ii) Identify restrictive areas and suggest modifications/ detours to the identified route.

iii) Establish the route on ground.

iv) Collection of development plans along the proposed pipeline route from various agencies having jurisdiction thereof.

v) Collecting information required for obtaining clearances from various authorities including environmental clearances.

2.0 REQUIREMENTS

2.1 GENERAL

2.1.1 The Company shall provide the Surveyor identified pipeline route details.

2.1.2 The Surveyor shall transfer the Company identified route onto Survey of India (SOI) topographic maps (in scale 1:250,000, 1:50,000 or less in case identified route passes through hilly areas) for use during field verification and preparation of route maps. The maps for this purpose shall be arranged by Surveyor unless specified otherwise in contract. For section of the identified pipeline route covered in maps identified/ declared by SOI as "Restricted" maps, Company may arrange such maps and make them available to the Surveyor during field verification. Surveyor may also use satellite imagery for updating of SOI maps, if required, as per provisions of Contract document.

2.1.3 Surveyor shall carryout reconnaissance survey as necessary to orient the most practical alignment along identified route using best judgment and experience of the Surveyor to interpret the needs of pipeline construction. The Surveyor shall use Global Positioning System (GPS) and other survey equipment such as magnetic compass, inclinometer, theodolite etc. as required during the reconnaissance survey.

2.1.4 The Surveyor shall locate and identify all existing features and obstructions along the route, identified by Company, and within a corridor of 5 km on either side of centerline that are not shown in the available maps and update the SOI maps to reflect such changes. Surveyor shall collect all development plans from the concerned authorities.

2.1.5 Surveyor shall establish stakes/ mark flag control points on ground along the centerline of route. Flag control points shall be clearly identified on the route maps. The flag control points shall also be established at all major road, rail, canal, pipeline, river crossings and terminal locations.

Copyright VCS Quality Services Private Limited – All rights reserved

2.2 PIPELINE ROUTE DEVIATION

2.2.1 Surveyor in general shall avoid any major deviation from the route identified by Company. Deviation from route, if considered essential by the Contractor, shall be brought to the notice of the Company representative for Company's approval.

2.2.2 Contractor shall avoid obvious man made or natural obstructions such as culverts, bridges, utility poles, buildings/ structures, gorges, plantations, archaeological sites, reserve forest, environmental sensitive areas, mining sites, future built-up areas etc.

2.2.3 Surveyor shall take into account following criteria while selecting pipeline route alignment in hilly areas/ ghat regions etc.

a. A longitudinal slope along pipeline route shall not exceed 1:5

b. A transverse slope across pipeline route shall not exceed 1:1

c. As far as possible ridges/ spurs should be used to climb up/ come down from hill. Side slopes of hills requiring excessive side hilling should be avoided.

Hand held inclinometer shall be used for estimation of slopes

2.2.4 Centerline alignment thus established shall be shown prominently on the route maps. In addition chainage in km, major turning points, intermediate facilities, planned developments, existing features/ obstructions, flag control points etc. shall also be marked on route maps.

2.3 FIELD MARKING

2.3.1 The entire length of the surveyed route shall be staked on ground along the proposed centerline. Stakes shall be 8 mm dia. painted twisted rods. Sketches/ photographs to facilitate location of stakes in field shall be furnished giving reference of existing features wherever. major directional change takes place.

2.3.2 Stakes shall be installed at flag control points, major crossings, major turning points and at an approximate 1.5 to 2.0 km interval as dictated by field conditions.

2.3.3 Consideration shall be given to land use in placing the stakes e.g. stakes placed and left in cultivated land may not be acceptable to the land owner. Stakes in such areas shall be placed at boundaries between cultivated areas where necessary.

3.0 PRESENTATION OF SURVEY DATA

Centerline survey data shall be presented in the form of following drawings/ documents:.

a. Pipeline route map showing route on SOI Topo sheets of scale 1:50,000 or 1:25,000 for unrestricted areas. (SOI topo sheets shall be updated for distance of 5 km on either side of pipeline centerline).

b. Pipeline route maps showing route on maps developed from SOI topo sheets or satellite imageries of 1:50,000 or 1:25,000 scale for areas covered in "Restricted" SOI maps.

c. Overall pipeline route map in 1:5000,000 scale.

d. Ground profile drawing and ground elevation v/s pipeline chainages in Microsoft Access software (ground elevations to be furnished on an average at every km interval or at

Copyright VCS Quality Services Private Limited – All rights reserved

locations where major change in ground elevation occurs).

e. Route report consisting of but not limited to following:

i) Route Description

ii) Topographic features

iii) Major Crossing details

iv) Extent of reserve forest

v) Land use pattern and soil strata along route.

vi) Developments plans

vii) Estimates for land cost for ROU acquisition.

viii) General metrological details

ix) Site photographs. (Photographs shall be sufficient in numbers to represent the entire terrain features).

x) Dump site locations suitable for pipe storage (when specified)

xi) Ground Profile along the route

xii) Comparison of alternative routes considered

Copyright VCS Quality Services Private Limited – All rights reserved

APPENDIX-B

DETAILED ROUTE SURVEY

1.0 OBJECTIVE

Objectives of detailed pipeline route survey are as follows:

a. To fix the pipeline alignment on ground.

b. To determine exact pipeline route length.

c. Finalize crossing locations and crossing angles.

d. Establish survey monuments on ground along pipeline route.

e. To obtain detailed topographic features within 30 m on either side of centreline.

f. To obtain ground levels and/ or contours.

g. To obtain cross-section details and topographic features at all crossings.

h. To gather details of land use pattern and soil characteristics

2.0 REQUIREMENT

2.1 Pipeline route and turning points (TPs) along the pipeline route shall be located by the Surveyor in consultation with Company Representative considering the following:

a. To avoid obstructions along the line, by ranging on ground and shifting the Turning Points if need be.

b. Terrain gradient to be checked by using hand held inclinometer.

c. Ensure proper angle of crossing by keeping as nearly right angle (to road/ canals/ rail/ rivers/ streams, etc.) as possible. The right angle may be laid on ground by using a chain or string lengths in ratio of 3, 4 and 5.

d. To check from construction point of view and avoid objects like power, telephone and telegraph poles, walls, tube wells or such other structures falling in the strip of land, 30m on either side of pipeline alignment.

e. To maintain minimum distance of 100m between two consecutive turning points.

f. "R.C.C. Pillars shall be provided with reinforcement of 4 nos. - 6mm dia bars with 4 equally spaced rings of 6mm dia. All pre-cast R.C.C. pillars should also be engraved with Company name on one shorter vertical face."

g. Surveyor shall locate and identify the existing features or obstructions along the route that are not shown in available maps or drawings.

h. Archeological sites, reserved forests, environmentally sensitive areas, mining sites and built-up areas shall be avoided.

i. Where it becomes apparent that a better route could be followed, the Surveyor shall consult the Company Representative for authorization to make a change.

Copyright VCS Quality Services Private Limited – All rights reserved

2.2 STAKING OF PIPELINE ROUTE

2.2.1 The pipeline defining trench centre line shall be staked by placing suitably painted marker stakes at Turning Points (TPs) and at Intermediate Points (IPs) between consecutive TPs. All Turning Points (TPs) and Intermediate Points (IPs) are referred as Intersection Points.

The pipeline centre line shall be staked on the ground as follows:

First, the Turning Points (TPs) shall be staked on the ground. After locating and marking the TPs, the intermediate points shall be staked while measuring slack distance. The staking shall normally be done at intervals of 500 m along the centre line of the pipeline.

2.2.2 The Intersection Points shall be serially numbered form the starting point. The serial number of each Intersection Point shall be boldly inscribed on the marker stake. In addition, the Turning Point (TP) marker stake shall identify the Turning Point reference number from the starting point.

2.2.3 For Intermediate Points (IPs) letter "P" shall precede the serial number of the intersection point marker. For Turning Points, the letters "TP" shall precede the Turning Point reference number, and the letter "P" shall precede the serial number of the Intersection Point.

2.2.4 The marker stakes at Turning Points (TPs) shall be referred with three reference stakes around the TP. The reference stakes shall carry the Turning Point reference number and their respective distance from the TP marker stake.

2.2.5 Change in direction of line shall be marked on the TP marker stakes. In addition, direction markers near TPs and other locations shall be placed wherever necessary.

2.3 STAKES AND MARKERS

2.3.1 All marker stakes shall be pre-cast reinforced concrete blocks having dimensions 150 x 200 x 800 mm, and shall be buried to a depth of 500 mm. Stone pillars of similar dimensions can be used in place of concrete blocks.

The exposed surface of the blocks shall have a smooth finish and shall be painted with 'Post Office' red paint. All letters and figures shall be paint marked on the surface of the blocks in white.

2.3.2 On the top surface of the marker stake, a cross inside a circle shall be engraved at the centre or a nail shall be put centrally inside an engraved circle, to indicate the exact position of the Intersection Point. The circle shall be of approximately 50 mm diameter.

2.3.3 Surveyor can, however, propose to the Company Representative other types of stakes/ markers which are better suited to site conditions.

2.4 BENCH MARKS

2.4.1 Permanent Bench Marks (BM) approx. every 5 km or permanent structures on or off the Right-of-Use (ROU) shall be established and described. Bench marks shall be located in such a manner that they will not be destroyed when the ROU is cleared for construction.

2.4.2 Additional permanent bench marks shall be established near the major pipeline crossing sites.

2.4.3 Location of Bench Marks shall be established in the field by using reinforced concrete/ stone blocks similar to pipeline marker stakes described in clause 2.3.1 of this specification. Exact position of BM shall be marked by a cross inside a circle or a nail put centrally inside an

Copyright VCS Quality Services Private Limited – All rights reserved

engraved circle on the top surface of the concrete block. The reduced level of the BM shall be paint marked on the concrete block. Letters "BM" shall precede the reduced level of bench mark recorded to the second place of decimal.

2.4.4 Accuracy of the reduced levels of the Bench Marks shall be verified wherever possible by checking levels with the nearest permanent Bench Mark established by Survey of India.

2.5 CROSSINGS

2.5.1 GENERAL

As far as possible, crossings shall be made at right angles. The Surveyor shall record the angles of crossing for all fences, property lines, utilities, roads, railways, canals, streams, etc. that are crossed. In addition, the true bearings of the centerline of the road, railway, canal, as well as that of the pipe centre-line shall be recorded. Turning Points (TPs) provided on either side of crossings shall be located, minimum 50m from the crossing's boundaries, in stable and firm ground.

2.5.2 RAILWAY CROSSINGS

The angles for all railway crossings shall be as close to 90 degrees as possible, but in no case be less than 85 degrees to the centre-line of the railway.

2.5.3 PRIMARY ROAD CROSSINGS

Primary roads are the National & State Highways, all-weather roads (paved/ unpaved) and roads providing access to major installations. The angle of crossings shall be as close to 90 degrees as possible, but in no case be less than 80 degrees to the centre line of the road.

2.5.4 SECONDARY ROAD CROSSINGS

The angles of crossing for secondary roads shall be as close to 90 degrees as possible, but in no case less than 45 degrees to the centre-line of the roads. All seasonal roads, unpaved village roads, cart-tracks, etc. come under this category.

2.5.5 RIVER CROSSINGS

These crossings shall be established as close as possible to the locations shown on the route map. Crossings shall be located in a comparatively straight reach of the river where the banks are stable and there is sufficient area for construction. Angle of crossing shall be as close to 90 degrees as possible.

2.5.6 CANALS/ DRAINAGE/ STREAM/ NALA/ DITCH CROSSINGS

The angle of crossing shall be as close to 90 degrees as possible but in no case be less than 60 degrees to the centre-line of the canal/ drainage/ stream/ nala/ ditch. Crossings shall be located where there is no evidence of slumping or erosion of banks, or bed.

2.5.7 UTILITY CROSSINGS

Utilities crossed shall be located at their centerlines with stakes containing station numbers in the survey. The angle of crossings shall be measured and locations established relative to their above ground facilities. The names and sizes of all utility lines shall be included in the survey notes. In cases of overhead power and telephone lines, the distance to the poles and

Copyright VCS Quality Services Private Limited – All rights reserved

towers on each side of the survey line shall be measured, and the numbers of poles or towers noted. Line voltage shall also be recorded. Where possible, the survey shall be established so that there is a minimum distance of 50 meters from the survey line to the nearest High Tension (11KV and above) pole or tower.

Underground utilities shall be located as far as possible and staked for a minimum distance of 30 meters on each side of the survey line.

2.6 BUILT-UP AREAS

2.6.1 MONUMENTS AND PROPERTIES

The pipeline alignment shall run clear of the existing monuments, properties and structures etc., as indicated in Pipeline Route Survey Data Sheet (Refer Annexure-I for sample).

For congested areas, closer distance may be adopted; however, location shall be approved by Company Representative.

2.6.2 PARALLEL ALIGNMENT

The pipeline alignment wherever runs parallel to an existing or planned under/ over ground facility will be treated as parallel alignment. For underground facilities Surveyor shall identify and locate them with suitable pipe locator/ cable locator. The following clearances shall be observed in case of parallel alignment defined above unless specified otherwise:

a. Between existing/ planned electrical power cables/ lines and the proposed pipeline - 50.0 meters

b. Between existing/ planned communication cables/ lines and the proposed pipeline - 25.0 meters

c. Between existing/ planned pipeline and the proposed pipeline - 50.0 meters

2.6.3 PARALLEL ENCROACHMENT

Unless otherwise stated, when the pipeline alignment runs generally parallel to a road or railway it shall be kept sufficiently clear of the Right of Way limits of the facility.

2.7 ACCURACIES IN MEASUREMENT

2.7.1 Surveyor shall incorporate corrections to the linear ground measurement due to standard errors (and variations from standard temperature and/ or pull in case of chain survey, wherever specifically approved by Company).

2.7.2 The error for angular closure for the work shall not exceed one minute per station and for linear measurements it shall be read to the nearest 0.001 m.

2.7.3 The error on closure for measurements on vertical distance to establish bench marks shall not be more that $24\sqrt{K}$ millimeters (where 'K' is the linear distance in km). The observations for measurement of vertical distances on bench marks shall be read to accuracy to the nearest 5 mm and for Intersection Points and other points along the pipeline route and at crossings to the nearest 10 mm. The error of misclosure in vertical distance shall be distributed linearly.

Copyright VCS Quality Services Private Limited – All rights reserved

2.7.4 Azimuth control shall be maintained by observations of the Sun or Polaris at intervals of 15-20 km by closing the traverse on existing control points. These observations of bearings together with deflection angles shall be recorded in survey notes.

Azimuth misclosure based on bearings with observed angles at Turning Points shall be equally distributed over the number of stations observed in between. Accuracy of azimuth observations shall be acceptable if the three deductions agree within one minute when Sun is used for Azimuth observation. In case of stars/ polaris observation, computed values should agree within 10 to 15 secs.

This check is not mandatory when using DGPS system for establishing location/ co-ordinates.

2.8 CHAINAGE

2.8.1 Distance measurement shall be made by Electronic Distance Measurement (EDM) equipment (or by using 50 m steel tape or 30 m chain if specifically approved by the Company). However, in case of abrupt slope change the tape/ chain shall be used and it shall be straightened parallel to the probable grading.

2.8.2 Distance between Intersection Points staked along the pipeline route should be measured and recorded. In addition, distance between level points shall also be measured and recorded.

2.8.3 Chaining, wherever permitted, shall be continuous in the direction of survey.

2.8.4 The true bearing of all straights shall be observed and recorded.

2.8.5 Data on nature of terrain, viz. sandy, stony, vegetation, etc. and type of ground will also be recorded along with chainages of change points.

2.8.6 Check on distance measurements shall be by Stadia method at the time of leveling.

2.8.7 Standard survey formats shall be used for record keeping.

2.9 MEASUREMENT OF HORIZONTAL ANGLES

2.9.1 Horizontal angles are measured to indicate the change in direction of alignment and specify the horizontal bend at the Turning Points.

2.9.2 Theodolite, reading directs to 10 seconds or better, shall preferably be used. Angles shall be measured clockwise from back station to fore-station. Mean of two readings-one on face left and other on face right shall be taken as the horizontal angle.

2.9.3 The line at both ends shall be tied to the grid control system being used for end facilities. True bearing at the beginning, end and at every 15-20 km shall be observed to keep a check on errors in angular measurements.

2.10 PROFILE

2.10.1 Continuous profile of the proposed pipeline route shall be established from the reduced levels taken.

i) at the starting point,

Copyright VCS Quality Services Private Limited – All rights reserved

ii) at all Turning Points (TPs),

iii) at all Intermediate Points staked on the ground,

iv) at all points on the pipeline route where there is a change in slope.

2.10.2 When the terrain is flat, reduced level shall be additionally recorded along the pipeline route at 100 m interval.

2.10.3 When the terrain is undulating, observation of reduced level shall be made at a sufficient number of points so as to give an accurate plotting of the ground profile along the route.

2.10.4 For road and railway crossings, the reduced levels shall be recorded at interval of 5 m along the pipeline alignment and at closure intervals wherever there is a change in slope within the entire width of the Right-of-Use of the road/ railway.

2.10.5 For river/ stream/ nala/ canal crossings, levels shall be taken at intervals of 5 m up to 30 m beyond the highest banks on both sides. Levels shall be taken at closer intervals, if there is a change in slope.

2.10.6 In right-of-use having slope across the pipeline alignment, as encountered in hilly areas, Ghat regions, ravines and other similar areas as directed by Company, cross-sections at 50 m interval and for a length of 30 m on either side of the pipeline alignment shall be observed and recorded.

2.10.7 For major water crossing sites, cross section as above shall be observed at both banks.

2.10.8 Method of RISE and FALL shall be used to compute reduced levels of various points. Check on computation shall be made by using the following formula:

Back site - Fore Site = ∑Rise - ∑Fall = First R.L. - Last R.L.

2.10.9 Maximum misclosure shall not exceed $24\sqrt{K}$ mm where 'K' is the distance in km. Maximum length of line of sight shall not exceed 100 m.

2.10.10 All levels shall be with respect to Mean Sea Level (MSL).

2.11 CO-ORDINATES AND GRID

2.11.1 Differential Global Positioning System (DGPS) shall be used to determine co-ordinates of all intersection points and facilities along pipeline route. Accuracy of co-ordinates shall be within 0.5 meter. Non-differential or autonomous GPS are not acceptable.

The following information shall be submitted for DGPS proposed by Surveyor for Company approval:

- GPS Receiver Model used:
- Differential Receiver Type:
- Guaranteed accuracy in meters:

Surveyor shall submit a procedure for setting up & use of DGPS. All co-ordinates shall be indicated in UTM grid as well as geographic grid. In case more than one survey party is deployed, each party shall use same reference grid and DGPS system.

2.12 LEVELS AND CONTOURS

Copyright VCS Quality Services Private Limited – All rights reserved

2.12.1 In addition to the elevation along centre line of route, the Surveyor shall obtain, using Total Station, levels within 30 m wide corridor on either side of route alignment. Co-ordinates (in UTM grid) of each level point shall also be recorded.

2.12.2 All such level points shall be plotted in the planimetry portion of the alignment sheets. The levels shall be taken in such a manner that contour can be drawn with a contour interval of 5 in. Surveyor shall draw the contours from the data collected.

2.12.3 Electronic data shall be made available in a format compatible with commercially available Digital Terrain Modeling (DTM) software

3.0 PRESENTATION OF SURVEY DATA

The data collected during survey shall be presented in the form of drawing and document listed below:

3.1 DRAWINGS

3.1.1 As a minimum following drawings shall be prepared and submitted:

S. No.	Description	Scale
a.	Detailed Route Map	1:50,000 on SOI Topographical Maps
b.	Additional Route Map	1:15,000
c.	Alignment sheets covering •Right-of-Use Planimetry in UTM grid •Ground Profile	1:2500 along the line 1:2500 across the line 1:2500 Horizontal
d.	Crossing Details (Road/ Railway/ Stream/ Nala/ Canal/ Crossings)	1:100 Horizontal 1:100 Vertical
e.	Crossing details (River Crossings) •Up to 250 m width •250 to 500 m width •Greater than 500 m width	1:200 Horizontal 1:200 Vertical 1:500 Horizontal 1:500 Vertical
f.	Cross Section for sloping Right-of-Use	1:100 Horizontal

Note: Crossing drawings shall be prepared using same horizontal and vertical scales as indicated above. In case one crossing cannot be accommodated in single sheet additional sheets may be used. Not to scale (NTS) drawings shall be rejected.

3.1.2 Pipeline route map shall show all features including, but not limited to roads and railroads, canals, streams, lakes, rivers, villages, towns, and cities that are located within a distance of 5 km from the pipeline centre-line on either side of it. For the entire region, contours shall be plotted on the route map at 20 m contour interval. Additional information like cultivated areas,

Copyright VCS Quality Services Private Limited – All rights reserved

barren land, areas prone to flooding, rocky areas and forests including access paths/ roads to Right-of-Use shall also be shown on the route maps.

Additionally for areas which are undulating such as hilly areas, Ghat regions, ravines, and other areas as directed by Company, Pipeline route map to a scale 1:15,000 shall be drawn over a distance of 1.0 km from the pipeline centre-line on either side of it. For such areas, contours shall be plotted at 10 m contour interval.

3.1.3 Right-of-Use Planimetry drawings shall show all objects within 30 meters on either side of the Pipeline in Plan and shall show spot level & contours at 5m interval.

3.1.4 For all rail, road, river, stream, canal and utility crossings, the angle of crossing shall be mentioned.

3.1.5 For rail, road, river, stream and canal crossings wider than 10 m, the distances at the start and at the end of the crossing from the nearest IP shall also be mentioned. For crossings less than 10 m, the distance of the centre line of crossing from the nearest IP shall be given.

3.1.6 For all river, stream and nala crossings, the level of water at the time of survey, High flood level recorded in last 100 years and the approximate surface velocity of the flowing stream (observed & recorded during survey) shall be reported in the survey drawings. Also, the general nature of the surface soil (soft/ hard, normal soil or rock/ boulders) at the bed and banks of the river/ stream/ nala shall be observed and mentioned in the drawings.

Ground profile (chainage v/s ground elevation) for the entire pipeline route shall be prepared and presented in a tabular format using Microsoft Access Database format.

3.2 DOCUMENTS

In addition to the drawings listed above, the Surveyor shall submit a report giving,

- Details of survey methodology followed
- Details of equipments used
- Brief Route Description
- Salient features of the route such as
  - Total length of pipeline
  - State wise distribution of pipeline route
  - Terrain details and land use pattern summary
  - No. of crossings (state wise & chainage wise)
  - Details of River crossings
  - State wise extent of forest/ reserve forest/ environmentally sensitive area
  - Significant elevation changes along the pipeline route with chainages
  - Nature of soil (sandy, clay, rocky, marshy, etc.)

- Print out of information required to be submitted as data base including
  - Level & contour information for DTM
  - Pipeline Profile data
  - TP detail

Copyright VCS Quality Services Private Limited – All rights reserved

-

APPENDIX-C

SOIL INVESTIGATION SURVEY ALONG PIPELINE

1.0 Objective

The objective of soil investigation survey is to obtain visual engineering classification of soil and geotechnical properties of soil for design & engineering of various facilities required along the pipeline route.

2.0 Requirements

2.1 General

2.1.1 The soil investigation includes boring, collection of disturbed samples from bare holes and visual engineering classification of soil along the pipeline route, carrying out Standard Penetration Test (SPT) at specified locations and getting the soil sample collected, from such bore holes, tested at laboratory for specified engineering properties and submission of detailed report to Company.

2.1.2 Visual classification of soil shall be in accordance with IS-1498; "IS Classification and Identification of Soils for General Engineering Purposes". Geotechnical investigation of soil shall be carried out as per relevant clauses of IS 1892 and other applicable IS standards.

2.2 Location of Bore Holes

2.2.1 Boreholes shall be made at an interval of 250 m along the pipeline route, at all intermediate points where there is apparently a change in the type of soil and at other places as given below by Company/Engineer-in-charge.

2.2.2 For canal, stream and river crossings, boreholes shall be made one on either bank and one on the bed of water crossing. For railroads, state highways and national highways, at least one bore hole shall be made at each crossing location.

2.2.3 Boring shall be carried out in accordance with the provision of IS : 1892. Minimum diameter of boring shall be 150mm. Auger boring shall be resorted to above water table, whereas below water table the boreholes shall be advanced by rotary drilling with mud circulation through all kinds of soil other then rock. While boring above water table, no water shall be introduced in boreholes. Casing shall be used to support the sides of boreholes in soft to firm soil.

2.2.4 Except for crossing location as defined under clause 2.2.5, the boring shall be either terminated at a depth of 3 m below NGL or on top of bed rock if rock is encountered at a depth of less than 3 m.

2.2.5 In case of boring at Highways (National/ State), River and Railways crossings, the boring shall either be terminated at a depth of 5 m below NGL or on top of bed rock, if rock is encountered at a depth less than 5 m.

2.2.6 Additionally, bore holes shall be made at all SV stations, IP stations and at all terminal locations.

Copyright VCS Quality Services Private Limited – All rights reserved

3.0 Presentation of Survey Data

3.1 Results of soil investigation survey and laboratory test carried out shall be submitted in the form of report covering as a minimum the following.

a. Visual engineering classification of soils encountered along the pipeline route in bore log form. Depth of Ground Water Table (GWT) below NGL shall also be mentioned if encountered.

b. Soil profiles along the pipeline route shall also be prepared and attached with the report.

c. Regions along the pipeline route where hard rock is present and special excavation techniques like blasting, etc. needs to be adopted for excavation of pipeline trench shall be clearly indicated in the report.

d. Summary of results obtained from various laboratory tests and their interpretation to evaluate various soil parameters.

3.2 Visual engineering classification of soils obtained from bore holes shall be shown in Alignment sheets also, whenever preparations of alignment sheets are included in SURVEYOR's scope of work.

Copyright VCS Quality Services Private Limited – All rights reserved

APPENDIX-D

POPULATION DENSITY SURVEY

1.0 OBJECTIVE

The objective of population density survey is to obtain details of population density (dwelling units, type of buildings, public places of gatherings etc.) along pipeline route in case of Gas pipelines and/ or high vapor pressure liquid pipeline

2.0 REQUIREMENTS

2.1 When survey is performed for gas pipelines, the class locations based on population density index as per code ANSI B 31.8 "Gas Transmission and Distribution Piping Systems" shall be recorded along with chainages at change points of each class location.

2.2 Population density index along the pipeline route shall be determined as follows:

A zone, 400m wide (one quarter mile), shall be considered along the pipeline route with the pipeline in the centre-line of this zone. Then the entire route of the pipeline shall be divided into lengths of 1600m (one mile) such that the individual lengths will include the maximum number of dwellings intended for human occupancy. The number of such dwellings which are intended of human occupancy within each 1600m (one mile) zone shall be counted and reported along with other survey data.

2.3 Areas shall be classified based on guidelines as given below:

a. Class 1 Location

A Class 1 Location is any 1600m (one mile) section that has 10 or fewer dwellings intended for human occupancy.

b. Class 2 Location

A Class 2 Location is any 1600m (one mile) section that has more than 10 but less than 46 dwellings intended for human occupancy.

c. Class 3 Location

A Class 3 Location is any 1600m (one mile) section that has 46 or more dwellings intended for human occupancy except when a Class 4 Location prevails.

d. Class 4 Location

A Class 4 Location includes areas where multi-storey buildings are prevalent, and where traffic is heavy or dense and where there may be numerous other utilities underground.

2.3.1 In addition to the criteria contained in Clause 3.1, while classifying areas, additional consideration must be give to possibilities of increase in concentration of population along the pipeline route such as may be caused by the presence of schools, hospitals, recreational areas of an organized character, places of assembly, places of worship etc. If one or more of these facilities are present, the area shall be classified as a Class 3 Location.

Copyright VCS Quality Services Private Limited – All rights reserved

2.3.2 Notwithstanding the provisions of Clause 3.1 and 3.2 above, while determining class location of an area, due consideration shall be given to the possibility of future development of the area during the design life of the pipeline. If it appears likely that future development may cause a change in the location class, this shall be taken into consideration while determining its class location.

3.0 PRESENTATION OF SURVEY DATA

3.1 The population density data shall be presented to company in company supplied data base in electronic form.

3.2 Hard copies print out of electronic data shall also be furnished.

3.3 The drawings (alignment sheets) showing population density data. In case alignment sheets are not prepared by surveyor, the same shall be made available by company for marking of population density data.

Copyright VCS Quality Services Private Limited – All rights reserved

APPENDIX-E

CADASTRAL SURVEY

1.0 OBJECTIVE

The objective of cadastral survey is to identify the ownership & land use details and collect data/ all other details sufficient for acquisition of ROU, under the Petroleum and Mineral Pipelines (Acquisition of Right of User in land) Act 1962 of Government of India, along the pipeline route identified by Company and duly surveyed and established on ground.

2.0 REQUIREMENTS

2.1. The Surveyor shall be responsible for collecting all revenue and other maps as well as arranging all necessary forms required for carrying out cadastral survey at his own cost. Company will assist the Surveyor by way of issue authorization letter only. Alignment of established pipeline route will also be made available to Surveyor.

2.2. Preparation of Cadastral Maps in 1:2500 scale as per the format approved by the Company showing the pipeline route and areas 30 m on either side of pipeline route to show the following details in cadastral maps.

a. Pipeline alignment as per details made available

b. ROU limit on either side of centerline as per details given in Data Sheet. ROU limit at turning points shall be marked in a curve having turning radius of 50 times pipe line outside diameter for pipeline size 18" & above. The pipeline diameter shall be indicated in data sheet. In case of multiple lines in same ROU, the largest pipe size shall be considered for this requirement.

c. Property identification/ survey number, Part "Hissas" on survey numbers as per the latest official revenue records.

d. Identification of ROU of existing pipelines/ utilities/ rail, roads, canal, river and other pipeline crossings on the Cadastral maps.

e. Number and type of trees within ROU limits.

f. Other major features such as given below:

- All built up areas.
- Religious places, schools, dharamshala, hospitals etc.
- Railway lines, National/ State Highways and district/ village and Panchayat roads.
- Creeks, rivers, canals, drains etc.
- Forest land (Reserved/ Protected/ Social).
- Industrial Land.
- Quary/ mining and other prohibited areas.
- Over-head/ underground utility crossings

The above information shall be adequate in all respect for ROU acquisition and obtaining forest clearance (if any).

2.3. Arrange for and furnish VII and XII extracts in duplicate of all land areas covered/ shown in cadastral map as per clause 2.2 above. The extracts are required to be duly certified by the local concerned authorities. Expenses in obtaining these extracts shall be borne by the Surveyor.

Copyright VCS Quality Services Private Limited – All rights reserved

2.4. In respect of the map at 2.2 above, marking of part "Hissas" as per the latest revenue records shall be checked/ verified by the local concerned authorities. Surveyor shall ensure that the land records are submitted to Company for checking and verifications as work proceeds.

2.5. Surveyor shall also prepare a schedule, as per format to be approved by Company Representative, showing information on part "Hissas" and details of ownership (to be extracted from map at para 2.2 above for obtaining pipeline Right of Use (ROU).

2.6. Surveyor shall prepare a summary of ownership details of land covered within 30 m on either side from the centerline of pipeline giving all relevant details village wise including land cost and crop cost supported by the relevant documents from respective Tehsil/ District head quarters.

2.7. Surveyor shall furnish requisite Performa (number of copies as specified in the Contract) duly completed on proper schedule form, including of procurement of all revenue maps and forms required from revenue department, submitting all proposal. village wise and Tehsil vise.

3.0 Presentation of Survey Data

The Surveyor shall submit all survey data in the form of following drawings/ documents:

3.1 Cadastral maps in scale 1:2500 as per clause 2.2 above.

3.2 Cadastral Survey Report including summary of ownership details, land and crop cost detail and other documents as per clause 2.5 & 2.6 as above.

3.3 All revenue maps collected by the Surveyor from various authorities

3.4 All forms/ performas necessary for estimation of land cost.

3.5 Any other detail as specified by Company.

Copyright VCS Quality Services Private Limited – All rights reserved

APPENDIX-F

PIPELINE RECONNAISSANCE SURVEY

1.0 SCOPE

The scope of work includes study of Survey Of India (SOI) topographic maps, route alternatives, development of project cost estimates, identification of major/minor crossings (like river, streams, nallahs, canals, railway, NH ,SH etc) including approximate width, visual identification of type of soil, congestion of underground facilities limited up to visual inspection and local enquiry, collection of Land use pattern(cultivated, barren, protected/reserved/social forest), identification of areas which may pose problem during construction and acquisition, suggesting alternative routes for detailed survey estimation of pipeline length, approx. cost estimates for acquiring R.O.U. along pipeline route, determination of broad population density index, tentative location/ area for locating permanent facilities such as sectionalizing valves, terminals, Tap-Offs and other facilities including booster stations, if any. Providing details for existing hydrocarbon and other mineral pipelines.

The reconnaissance survey shall be carried out proposing minimum three or more feasible alternative routes and giving details of likely crossings and other constraints that is likely to be encountered during pipeline construction on each route, future development plans of land owning authorities like local Municipal authorities, Gram Panchayat, PWD, Railway, NHAI/SH , etc, availability of land including ownership details for setting up of CNG stations, DRS stations, PCP (permanent cathodic protection) stations, potential Industrial consumers for PNG usage and recommending the best feasible route .

2.0 REQUIREMENT

2.1. All survey works shall be performed by or under the supervision of a qualified surveyor.

2.2. All measurement shall be in metric units.

2.3. The readings and noting shall be neat, legible and the Surveyor shall duly initial scorings and over-writing.

2.4. The length of all alternatives shall be clearly mentioned and shown separately in drawing.

2.5. Also routes should be suggested based on considerations regarding execution feasibility, minimum length, permission feasibility and minimum obstructions.

2.6. The side of road or structure along which the proposed pipeline will pass should also be mentioned with proper reasoning for the same.

3.0 RESPONSIBILITY OF COMPANY:

3.1. The Company will Provide Brief Feasibility Report (Refer Attachment) which includes give only location of the two points i.e. the start and end points of the pipeline route. All the other responsibility will be tenderer's.

Copyright VCS Quality Services Private Limited – All rights reserved

4.0 CROSSING:

4.1. General

4.2. As far as possible, crossings shall be made at right angles. The Surveyor shall record the crossing number, approximate width and chainages at all crossings for all fences, property lines utilities, roads, railways, canals, stream etc., that are crossed shall be mentioned in the report.Crossing shall be located where there is no evidence of slumping or erosion.

4.3. Utility Crossings

The underground facilities such as drainage lines, telephone lines, electrical cables etc. which may cause problem during execution of pipeline shall be located using pipe/cable locator/ground positioning radar system and shall be shown in drawings. Accordingly suggestion shall be given on the side of road (or any structure) the pipeline should pass.

5.0 PROFILES:

The general ground profile shall be mentioned in the report. Also any major change in the profile shall be mentioned in the report. At all crossings the ground profile shall be specifically mentioned.

6.0 REPORT AND DRAWINGS:

6.1. The drawing shall be prepared in the standard format and inclusive of all the details mentioned above. Also draft report of the same shall be submitted. The report and drawings shall be approved by GGPL before final submission of drawing and report

Copyright VCS Quality Services Private Limited – All rights reserved

ANNEXURE-I

PIPELINE ROUTE SURVEY DATASHEET

Gradient (ROU)	:	1:5 (max.) Along pipeline alignment (See note-5) 1:10 (max.) Across pipeline alignment
Bend Radius	:	30 D for pipeline size up to 16" 40 D for pipeline size greater than 16" (D= Outside diameter of pipeline)
Minimum Distance between TP's	:	100 m
Maximum Deflection Angle at TP	:	90°
ROU width	:	20 m (5 m in left and 15 m in right side of pipeline centerline while viewing in the direction of flow) unless specified otherwise.
Minimum distance		
from existing Habited dwellings	:	15 m
from Buildings/ structures/ monuments	:	50 m
Co-ordinates of starting point	:	To be filled by Survey Contractor

Notes:

1. Number of TP's along the pipeline route shall be kept to a minimum. Additional traversing required for TP optimization shall be carried out by the Contractor prior to finalization of TPS.
2. Chainages for pipeline shall start with 0.0 chainage in the direction of flow for each part. In case of spur lines the branch off location from trunk line shall be chainage 0.0 km.
3. At road/ rail/ canal crossing locations, nearest TP on either side shall be located at a distance not less than 50 m from the ROU of the facility being crossed, unless instructed otherwise by Company Representative.
4. In case of major river crossings, no TP shall be located within 150 m from the defined bank on either side, unless instructed otherwise by Company Representative.
5. Slope up to 1:5 can also be acceptable for hill section.

Copyright VCS Quality Services Private Limited – All rights reserved

ANNEXURE-II

SAMPLE FORMATS

Surveyor shall prepare all drawings as per the enclosed formats. Soft copies of formats will be provided at appropriate time.

1. Alignment Sheets
2. Pipeline Route Maps
3. River Crossings
4. Nala/ Canal Crossings
5. Rail Crossings
6. Road Crossings.

Copyright VCS Quality Services Private Limited – All rights reserved

ENERGISING QUALITY

VCS QUALITY SERVICES PVT. LTD.

STANDARD SPECIFICATION
FOR
GEOTEXTILE BAGS

VPC – SS – PP - 2018

01	28.01.2020	MB	MC	AD	SK
Rev. No	Date	Prepared By	Checked By	Approved By	Authorized By

UNCONTROLLED COPY	:	If printed
CONTROLLED COPY	:	If in soft and signed

Copyright VCS Quality Services Private Limited – All rights reserved

REVISION RECORD						
Rev.	**Revision Date**	**Prepared by**	**Checked by**	**Approved by**	**Authorized by**	**Revision Description**
00	07.08.2017					Document formatting, Cover Page, Doc numbering updated from SS-PL-031 to VPC-SS-PL-0031 keeping revision number same
		AS	SM	AD	SK	
01	28.01.2020					Document numbering updated from VPC-SS-PL-0031 to VPC-SS-PP-2018
		MB	MC	AD	SK	

Copyright VCS Quality Services Private Limited – All rights reserved

CONTENTS

1.0 SCOPE 4

2.0 DESIGN 4

3.0 MATERIAL 4

4.0 DELIVERY, STORAGE AND HANDLING 5

5.0 MARKING 5

6.0 OTHER TECHNICAL REQUIREMENTS 5

7.0 DOCUMENTATION 5

Copyright VCS Quality Services Private Limited – All rights reserved

1.0 SCOPE

1.1 This specification covers the minimum requirements for design, manufacture and supply of non-biodegradable geo-textile bags (made from polypropylene fabric) intended to be used for providing anti-buoyancy measures when filled with dredged materials.

2.0 DESIGN

2.1 The geo-textile bags shall be suitable for pipeline diameter and wall thickness indicated in the Material Requisition.

2.2 The factor of safety to be used for anti-buoyancy calculations shall be as specified in the Material Requisition.

2.3 Geo-textile bags shall be suitable for filling with dredged materials. Composition and other details of dredged materials shall be as specified in material requisition.

2.4 The geo-textile bags shall meet the following requirements:

a. Body fabric material must be rated for geo-textile use and as such must be woven with minimum permeability rating to suit specified dredged materials.

b. Geo-textile bags shall be of top loading fabric-type made from woven polypropylene.

c. The centre-to-centre spacing between a set of geo-textile bags shall be kept minimum possible but in no case shall it exceed 6.0 meters.

2.5 Buoyancy force (upward force due to submerged 16” NB outside diameter, 3 layer PE coated pipe) of 200 kg/m shall be considered in design calculations for installation of geo-textile bags.

2.6 Manufacturer shall take prior approval from Owner on details of geo-textile bags and design calculations.

2.7 The fabric weights to be used in the pipeline should be from a manufacturer with a minimum of 5 years continuous, successful experience in production of geo-textile fabric weights for pipeline buoyancy control application. Manufacturing plants must be an ISO 9002 certified facility to ensure consistency in quality.

2.8 The proposed bags and associated straps etc. shall not be detrimental to the pipeline coating in any manner.

2.9 Repair of bags, in any manner is not permitted.

3.0 MATERIAL

3.1 The body fabric must be treated for UV protection and longevity. The weight of the body fabric must be a minimum of 400 gms/m^2.

3.2 All material used in the fabrication of geo-textile bags such as webbing, lifting loops, threads etc. shall be polypropylene material.

3.3 All webbing must have a minimum individual tensile rating of at least 2268 kg. With a combined safety rating of 4 times the capacity.

3.4 Body fabric must have a maximum elongation rating of 15% and be stable within a pH range between 2 to 12.

3.5 All testing should be as per ASTM or equivalent standards

Copyright VCS Quality Services Private Limited – All rights reserved

4.0 DELIVERY, STORAGE AND HANDLING

4.1 Geo-textile bags shall be delivered on pallets with a black protective cover for easy handling and storage.

5.0 MARKING

5.1 On each black protective cover the following shall be marked by suitable means "Maintain cover or provide separate cover on bags until use. Ensure proper protection from oil, dirt, sunlight etc."

5.2 Each geo-textile bag shall be marked by indelible paint or other suitable methods with the following minimum information:

a. Product model
b. Name of Manufacturer
c. Dimensions of bag in mm.
d. Weight carrying capacity (Total weight when filled)
e. Year, month of manufacture and product batch number

6.0 OTHER TECHNICAL REQUIREMENTS

6.1 Manufacturer shall provide skilled persons for initial assistance / on the job training during filling and installation of supplied geo-textile bags. Schedule of installation will be communicated to manufacturer at an appropriate time. The duration of technical assistance shall be limited to five calendar days during which period it is expected that the pipeline installation contractor will get trained in filling & installation of 'PIPESAK'.

7.0 DOCUMENTATION

7.1 Manufacturer shall furnish the following documents at the time of bidding:

a. All necessary calculations to demonstrate the suitability of proposed geo-textile bags for pipeline anti-buoyancy measures under the specified design conditions. The manufacturer shall provide an undertaking that the proposed geo-textile bags are suitable for and complying with the requirements indicated in Material requisition.
b. All details of proposed geo-textile bags (such as dimensions, material used etc.) shall be furnished. Bidder shall highlight any special features if any.
c. General arrangement drawings of all items viz. set of geo-textile bags, hopper, loading arrangement etc.
d. Details of all associated equipment's (hoppers etc.), spares, tools etc. required to fill, transport and install geo-textile bags on the pipeline.
e. Complete descriptive technical catalogues describing the materials offered along with samples of geo-textile bags, its properties and installation instruction as applicable specifically to the project.

7.2 Prior to shipment of materials from manufacturer's works, Vendor shall furnish six copies of the following:

a. Specific and detailed installation instructions with pictorial illustrations. Manufacturer shall highlight any precautions / safety measures to be taken.
b. Specific storage and handling instructions
c. Copies of final approved design calculations.

Copyright VCS Quality Services Private Limited – All rights reserved

ENERGISING QUALITY

VCS QUALITY SERVICES PVT. LTD.

STANDARD SPECIFICATION
FOR
WELDING OF ONSHORE HYDROCARBON PIPELINE

VPC-SS-PP-2019

04	04.02.2022	SR	MC	HK	HK
Rev. No	**Date**	**Prepared By**	**Checked By**	**Approved By**	**Authorized By**

UNCONTROLLED COPY : If printed

Copyright VCS Quality Services Private Limited – All rights reserved

CONTROLLED COPY	:	**If in soft and signed**

REVISION RECORD

Rev.	Revision Date	Prepared by	Checked by	Approved by	Authorized by	Revision Description
00	27.08.2018					Issued as Standard Specification.
		PK	MD	AD	SK	
01	19.09.2019					Re-issued as Standard Specification
		SS	MC	AD	SK	
02	28.01.2020					Document numbering updated from VPC-SS-PL-0045 to VPC-SS-PP-2019.
		MB	MC	AD	SK	
03	04.01.2022					Revised as marked
		SR	MC	HK	HK	
04	04.02.2022	SR	MC	HK	GW	Updated as per Client Comments

Copyright VCS Quality Services Private Limited – All rights reserved

ABBREVIATIONS:

ANSI	American National Standards Institute
API	American Petroleum Institute
ASME	American Society of Mechanical Engineers
BS	British Standard
CRT	Cathode Ray Tube
CTOD	Crack Tip Opening Displacement
GMAW	Gas Metal Arc Welding
GTAW	Gas Tungsten Arc Welding
HAZ	Heat Affected Zone
HV	Vickers Hardness
IIW	International Institute of Welding
IQI	Image Quality Indicato
ISO	International Organization for Standardisation
MPI	Magnetic Particle Inspection
PQR	Procedure Qualification Record
SMAW	Shielded Metal Arc Welding
UT	Ultrasonic Testing
UTS	Ultimate Tensile Strength
WPS	Welding Procedure Specification

Copyright VCS Quality Services Private Limited – All rights reserved

CONTENTS

1.0 SCOPE 5

2.0 APPLICABLE CODE AND STANDARDS 5

3.0 BASE MATERIAL 4

4.0 WELDING CONSUMABLES 5

5.0 EQUIPMENT & ACCESSORIES 6

6.0 WELDING PROCESSES 6

7.0 BEVEL CLEANING / BEVEL INSPECTION 7

8.0 ALIGNMENT AND SPACING 7

9.0 WEATHER CONDITIONS 8

10.0 WELDING 9

11.0 HEAT TREATMENT 11

12.0 INSPECTION & TESTING 13

13.0 REPAIRS OF WELDS 16

ANNEXURE-1 : DESTRUCTIVE TESTING 18

ANNEXURE-2 : ULTRASONIC INSPECTION 23

ANNEXURE-3 : RADIOGRAPHY 26

EXHIBIT-A : ELECTRODE QUALIFICATION TEST RECORD 33

EXHIBIT -B : STRESS RELIEF HEAT TREATMENT PROCEDURE SPECIFICATION 36

EXHIBIT-C : WELDING PROCEDURE QUALIFICATION TEST RECORD 37

EXHIBIT-D : WELDER QUALIFICATION TEST RECORD 40

EXHIBIT-E : WELDER'S IDENTIFICATION CARD 41

EXHIBIT-F : RADIOGRAPHIC PROCEDURE FOR PIPE WELDING 42

Copyright VCS Quality Services Private Limited – All rights reserved

1.0 SCOPE

This specification covers the welding of carbon and low-alloy steel pipeline used in the transmission of hydrocarbons, covers welding of distribution systems. This specification applies to new construction of pipeline projects. The welding may be done by a shielded metal arc welding, submerged arc welding, gas tungsten arc welding, gas metal arc welding, flux cored arc welding, plasma arc welding or oxyacetylene welding process or by a combination of these processes using a manual, semiautomatic or mechanized welding technique or a combination of these techniques. The welds may be produced by position or roll welding or by a combination position and roll welding.

This specification also covers the procedures for radiographic, magnetic particle, liquid penetrant and ultrasonic testing as well as the acceptance standards for destructive testing in Procedure Qualification and Non-Destructive testing methods viz. Radiographic, Magnetic Particle, Liquid Penetrant, Ultrasonic and visual.

It is intended that all work performed in accordance with this specification meets or exceeds the requirements of this specification

Any approval granted by the COMPANY shall not relieve the CONTRACTOR of his Responsibilities and guarantees.

2.0 APPLICABLE CODE AND STANDARDS

All welding work, equipment for welding, heat treatment, other auxiliary functions and the welding personnel shall meet the requirements of the latest editions (editions in force at the time of floating the enquiry) of the codes, standards and specifications listed below:

a) Code for Gas Transmission and Distribution Piping Systems, ASME B 31.8

b) Standard for welding of Pipelines and Related Facilities, API 1104

c) Specification for welding Electrodes and Filler Materials ASME Sec. II C

d) Non-Destructive examination, ASME Sec. V

3.0 BASE MATERIAL

In general carbon steel is used in this specification. The details of material specifications are given in the welding Specification Chart attached along with other project data sheets. The CONTRACTOR will arrange and maintain the record of test certificates of all the materials for the reference of the welding engineer.

Copyright VCS Quality Services Private Limited – All rights reserved

4.0 WELDING CONSUMABLES

a) The CONTRACTOR shall provide at his own expense all the welding consumables necessary for the execution of the job such as electrodes, oxygen, acetylene etc. and These shall bear the approval of the COMPANY.

b) The welding electrodes / filler wires supplied by the CONTRACTOR shall conform to the class specified in the welding specification chart attached along with other project data sheets. The materials shall be of the make approved by the COMPANY.

c) The electrode shall be suitable for the welding process recommended and the base metal used. Physical properties of the welds produced by an electrode recommended for the welding of a particular base metal shall not be lower than the minimum values specified for the base metal unless otherwise specified in the Welding Specification Chart and shall correspond to the physical properties of the class of electrode adopted. The choice of electrode shall be made after conducting the required tests on the electrodes as per relevant standards, and shall be the sole prerogative of the COMPANY.

d) The CONTRACTOR shall submit batch test certificates from each electrode manufacturers giving details of physical and chemical tests carried out by them for each batch of electrodes to be used.

e) Electrode Qualification test records shall be submitted as per the Exhibit-A (attached) in respect of the electrodes tested by the CONTRACTOR for obtaining the approval of the COMPANY.

f) All electrodes shall be purchased in sealed containers and stored properly to prevent deterioration. The electrodes removed from the containers (except cellulosic coated electrodes) shall be kept in the holding ovens, at the temperature recommended by the electrode manufacturer. Ovens shall be used for the low hydrogen electrodes only. Out-of-the oven time of electrodes before they are consumed shall not exceed the limits recommended by the electrode manufacturer. The electrodes shall be handled with care to avoid any damage to the flux covering. Different grades of electrodes shall be stored separately. Cellulosic electrodes used shall however be used as per the specific recommendations of manufacturer.

g) The electrodes used shall be free from rust, oil, grease, earth and other foreign matter, which affect the quality of welding.

Copyright VCS Quality Services Private Limited – All rights reserved

h) **Shielding Gas**: The composition and the purity of shielding gas when required by the welding

Processes other than shielded metal arc welding, when permitted by the COMPANY shall bear the approval of the COMPANY. Where appropriate, gases or gas mixture of the following quality shall be used.

I. Argon gas complying with BS 4365.

2. Carbon dioxide gas complying with type 1 specified in BS 4105

3. Gas mixtures that have been proved to be satisfactory as a result of procedure approval tests.

When a gas mixture is used, which has specified additions, e.g. 2% O2, 5% CO2 the variation of such addition shall not exceed ±10% of that stated. Moisture content shall correspond to a dew point of -30'C or lower.

5.0 EQUIPMENT & ACCESSORIES

The CONTRACTOR shall have sufficient number of welding and cutting equipment, Auxiliaries and accessories of sufficient capacities to meet the target schedules.

5.1 All the equipment for performing the heat treatment, including transformers, thermocouples, pyro-meters, automatic temperature recorders with suitable calibration arrangements, etc. shall be provided by the CONTRACTOR, at his own expense and these shall bear the approval of the COMPANY. Adequate means of measuring current and voltage shall be available.

5.2 Redoing of any work necessitated by faulty equipment or operation used by the CONTRACTOR, will be done at his own expense.

6.0 WELDING PROCESSES

6.1 Welding of various materials under this specification shall be carried out using Shielded Metal Arc Welding process (SMAW) with the approval of the COMPANY.

6.2 The welding processes to be employed are given in the welding specification chart attached along with other project data sheets. Any deviation desired by the CONTRACTOR shall be obtained through the express consent of the COMPANY.

6.3 Automatic process shall be employed only with the express approval of the COMPANY. The welding procedure adopted and the consumables used shall be specifically approved.

6.4 A combination of different welding processes or a combination of electrodes of different classes / makes could be employed for a particular joint only after duly qualifying the welding procedures to be adopted and obtaining the approval of the COMPANY.

Copyright VCS Quality Services Private Limited – All rights reserved

7.0 BEVEL CLEANING / BEVEL INSPECTION

The Line Pipe supplied by COMPANY shall have bevel ends as specified in the applicable specification for the Line Pipe attached with the Bid Package. Any modification thereto, if required by the CONTRACTOR due to his special welding technique, shall be carried out by the CONTRACTOR at his own cost. Before welding, all the rust and the foreign matter shall be removed from the bevelled ends by power operated tools. This shall be effected inside and outside and for a minimum distance of 25 mm from the edge of the weld bevel. The bevels shall be thoroughly inspected at this stage. If any of the ends of the pipe joints are damaged to the extent that, in the opinion of the COMPANY, satisfactory weld spacing cannot be obtained and local repair by grinding cannot be successfully done, the damaged ends shall be cut and bevelled to the satisfaction of the COMPANY, with an approved bevelling machine. Manual cutting and weld repairs of bevels is not allowed. Should laminations, split ends or inherent manufacturing defects in the pipe be discovered, the lengths of pipe containing such defects shall be removed from the line to the satisfaction of COMPANY. On pipes, which have been cut back, a zone extending 25 mm back from the new field bevel, shall be ultrasonically tested to the requirement of the line pipe specification to ensure freedom from laminations. The new bevel shall be 100% visual and 100% dye penetrant/MPI tested. A report shall be written for all the testing and records kept.

8.0 ALIGNMENT AND SPACING

Immediately prior to line-up CONTRACTOR shall inspect the pipe ends inside and outside for damage, dents, laminations etc. Pipe for welding shall be set up, correctly spaced, allowing for the temperature changes during welding. In correct alignment shall in no circumstances be sprung into position. Temporary attachments of any kind shall not be welded to the pipe. Welds joining the sections of the pipeline, valve installation or similar welds classified as tie in welds shall be made in the trench. Otherwise the alignment and welding shall be made alongside the ditch with the pipe supported on skids and pack pads or other suitable means approved by COMPANY, at least 500 mm above the ground unless approved by the COMPANY in specific cases.

Seam orientation of welded pipe shall be selected to ensure that at the circumferential welds, the longitudinal welds shall be staggered in the top 90° of the pipelines, or 250 mm whichever is the lesser. A longitudinal joint shall pass an

Copyright VCS Quality Services Private Limited – All rights reserved

appurtenance of a structural element at a minimum distance of 50 mm. Should a section of the line containing uncompleted welds fall from the skids, the CONTRACTOR shall immediately inform the COMPANY.

Every effort shall be made to reduce misalignment by the use of the clamp and rotation of the pipes to the best fit. For pipe of same nominal wall thickness the offset shall not exceed 1.6 mm. The offset may be checked from outside using dial gauges. Any branch connection sleeve, etc. shall be at least 150 mm from any other weld. The welds for fittings shall be so located that the toe of the weld shall not come within 50 mm of any other weld. Cold dressing is permissible only in cases of slight misalignment and may only be carried out with a bronze headed hammer. Hot dressing shall not be permitted. When welding pipes of different wall thickness (as directed by COMPANY) a special transition piece shall be used. This shall have a minimum of 1:4 taper. The welds shall be subject to both ultrasonic and radiographic inspection.

The root gap shall be accurately checked and shall conform to the qualified welding procedure. The use of internal Line-up Clamps is mandatory for pipe diameters 10" and above. However, in some cases (tie-in welds, flanges, fittings, diameter of pipe 10" etc.) where it is impossible to use internal clamps, an external line-up clamp may be used.

The internal line-up clamp shall not be released before the entire first pass has been completed.
When an external line-up clamp is used, all the spaces between the bars or at least 60% of the first pass shall be welded before the clamp is released and the pipe remaining adequately supported on each side of the joint.

Segments thus welded shall be equally spaced around the circumference of the pipe. Slag, etc. shall be cleaned off and the ends of the segments shall be prepared by grinding, so as to ensure continuity of the weld bead.

9.0 WEATHER CONDITIONS

The parts being welded and the welding personnel shall be adequately protected from rain and strong winds. In the absence of such a protection no welding shall be carried out. The completed welds shall be suitably protected in case of bad weather conditions.

Copyright VCS Quality Services Private Limited – All rights reserved