INDRADHANUSH GAS GRID LIMITED (IGGL)
(Joint Venture of IOCL, ONGC, GAIL, OIL and NRL)
GUWAHATI, ASSAM

NORTH -EAST GAS GRID PIPELINE PROJECT

BID DOCUMENT FOR

LAYING & CONSTRUCTION OF STEEL GAS PIPELINE AND TERMINALS ALONG WITH ASSOCIATED FACILITIES FOR DULIAJAN FEEDER LINE (DFL) PROJECT OF M/S INDRADHANUSH GAS GRID LIMITED (IGGL)

OPEN DOMESTIC COMPETITIVE BIDDING

Tender ID: 2026_IGGL_288973_1

Bid Document No.: 05/51/E-0085/IGGL/001(i)

VOLUME – II OF IV

PREPARED AND ISSUED BY
MECON LIMITED
(A Govt. of India Undertaking)
Delhi, India

CONTENTS

LIST OF SPECIFICATIONS / STANDARDS

VOLUME-II OF IV

I. TECHNICAL SPECIFICATION FOR MECHANICAL WORKS

1.	Specification for Mainline Construction (Onshore)	MEC/S/05/21/01
2.	Specification for Welding of Onshore Gas Pipelines + Welding Specification Chart	MEC/S/05/21/02
3.	Specification for Hydrostatic Testing of Onshore Pipeline	MEC/S/05/21/03
4.	Specification for major water Crossings	MEC/S/05/21/04
5.	Specification for Pipeline Crossing Roads, Railroads, Minor Water and Other Crossings	MEC/S/05/21/05
6.	Specification for Piping Fabrication and Erection	MEC/S/05/21/06
7.	Specification for Shop and Field Painting	MEC/S/05/21/07
8.	Specification for Repair of Pipeline Corrosion Coating	MEC/S/05/21/08
9.	Specification for Pipeline Markers	MEC/S/05/21/10
10.	Specification for Flushing and Testing of Piping Systems	MEC/S/05/21/11
11.	Specification for Casing Insulators and End Seals	MEC/S/05/62/12
12.	Specification for Field Joint Coating (Onshore Pipelines)	MEC/S/05/21/13
13.	Specification for Vents, Drains and Wells	MEC/S/05/21/15
14.	Specification for Blasting	MEC/S/05/21/18
15.	Specification for Gaskets, Bolts and Nuts	MEC/S/05/21/19
16.	Specification for Piping Material Specification	MEC/23UU/05/28/M/000/1092
17.	Technical Specification for Pre-Commissioning and Commissioning	MEC/05/28/M/000/1093
18.	Specification for Health, Safety and Environment Management (HSE)	MEC/S/05/21/65

19.	Specification for Quality Assurance System Requirements	MEC/S/05/62/66
20.	Specification for Documentation for Pipeline Construction	MEC/S/05/21/69
21.	Specification for Caliper Pigging	MEC/S/05/62/70
22.	Specification for Field Joint Coatings of Pipeline for HDD Crossing	MEC/S/05/21/74
23.	Specification for Pipeline Crossings Using HDD Method	MEC/S/05/21/75
24.	General Notes to Valves	-
25.	Specification for Ball Valves	MEC/TS/05/21/002
26.	Specification for Plug Valves (NB>=2”)	MEC/TS/05/62/003
27.	Technical notes for Gate & globe Valves	-
28.	Specification for Check valves	MEC/TS/05/62/004
29.	Specification for Packing, Transportation and Handling of Valves	MEC/TS/05/21/061
30.	Specification for Gas Over Oil Actuator	MEC/TS/05/E5/002
31.	Specification for Manually Operated Hydraulic Actuator (HOV)	MEC/TS/05/E5/004
32.	Specification for Scrapper Trap	MEC/TS/05/28/007
33.	Specification for Quick Opening End Closure	MEC/TS/05/21/013
34.	Specification for Pressure Safety Valves	MEC/TS/05/62/056
35.	Specification for Insulating joint	MEC/TS/05/21/009
36.	Specification for Flow Tees	MEC/TS/05/21/011
37.	Specification for Seamless Fittings, Flanges Size up to DN 400 mm (16”) NB	MEC/TS/05/21/025
38.	Specification for flanges and welded fittings [size DN 450 mm (18") and above]	MEC/TS/05/21/026
39.	Specification for Submerged Arc Longitudinal Welded (SAWL) Line Pipe (Onshore)	MEC/TS/05/21/012B
40.	Specification for Assorted Pipes	MEC/TS/05/62/59A
41.	Technical Specification for Long Radius Bends	MEC/TS/05/62/015
42.	Specification for Split Tee (Hot Tap material)	MEC/TS/05/21/011A

43.	Technical specification of Mud mat	MEC/TS/05/62/060

II. TECHNICAL SPECIFICATION FOR CIVIL WORKS

1.	Specification For Civil Engineering Works	MEC.11.GTS.05 REV -0
2.	Specification For Bored Cast in SITU Concrete Piles	MEC/05/22/TS/C/08
3.	Technical Specification for Topographical and Geo-Technical Survey	MEC/05/22/TS/C/10

III. TECHNICAL SPECIFICATION FOR STRUCTURAL WORKS

1.	Technical Specification for Fabrication, Erection and Painting of Steel Structures, Gates and Miscellaneous Works	MEC/05/22/C&S/TS/02

IV. TECHNICAL SPECIFICATION FOR ARCHITECTURAL WORKS

2.	Technical Specification for Porta Cabin at DT Lepetkata located inside BCPL Lepetkata	MEC/0085/05/48/A/004

V. TECHNICAL SPECIFICATION FOR INSTRUMENTATION WORKS

1.	Specification For Installation of Instruments	MEC/S/05/26/01
2.	Specification For Instrument Tubing	MEC/S/05/26/02
3.	Specification For Instrument Tube Fittings	MEC/S/05/26/04
4.	Specification For Instrument Valves and Manifolds	MEC/S/05/26/05
5.	Specification For Junction Boxes and Cable Glands	MEC/S/05/26/06
6.	Specification For Signal Cables	MEC/S/05/26/07
7.	General Specification for Instrumentation	MEC/S/05/E5/I/08
8.	Standard Specification for Cabling	MEC/S/05/26/021
9.	Specification For Earthing and Lighting Protection	MEC/S/05/26/23A

VI. TECHNICAL SPECIFICATION FOR TELECOM WORKS

1.	Specification for HDPE Duct Laying and Testing	MEC/S/05/E5/T/001A
2.	Specification for OFC Laying, Drum testing,	MEC/S/05/E5/T/001B

	OFC Jointing & OFC Testing	
3.	Specification for Permanently Lubricated Telecom HDPE Duct and Accessories	MEC/TS/05/E5/T/037
4.	Technical Specification for Optical Fibre Cable & Associated Items	MEC/TS/05/E5/T/096A

VII. TECHNICAL SPECIFICATION FOR CATHODIC PROTECTION WORKS & INTERNAL CORROSION MONITORING SYSTEM

1.	Specification for Corrosion Survey	MEC/S/05/21/016C
2.	Specification for Temporary Cathodic Protection System	MEC/TS/05/E9/016A
3.	Specification for Permanent Cathodic Protection System	MEC/TS/05/E9/016B
4.	Specification for Cathodic Protection Power Supply Module (CPPSM)	MEC/TS/05/E9/082
5.	Specification for Cathodic Protection Transformer Rectifier (TR) Unit	MEC/TS/05/E9/082A

VIII. TECHNICAL SPECIFICATION FOR ELECTRICAL WORKS

1.	Specification For Diesel Generator Set	MEC/05/E9/TS/04A
2.	Specification For Medium Voltage Switchboard	MEC/05/E9/TS/06
3.	Specification For Power and Control Cables AC UPS	MEC/05/E9/TS/09
4.	Specification For AC UPS	MEC/S/05/E9/10A
5.	Specification For Un-Interrupted Power Supply (UPS) System	MEC/S/05/E9/071
6.	Specification For High Mast	MEC/S/05/E9/12
7.	Specification For Electrical Bulk Material	MEC/TS/05/E9/11
8.	Specification for Earthing and Lightening Protection	MEC/TS/05/E9/13
9.	Specification for Installation of Electrical Equipment	MEC/TS/05/E9/14

10.	Specification for Field Inspection, testing and commissioning	MEC/TS/05/E9/15
11.	Specification for Ni-Cd Battery	MEC/TS/05/E9/17
12.	Specification for Solar Photo Voltaic (SPV) Power Supply System	MEC/TS/05/E9/078
13.	Specification for Battery Charger	MEC/TS/05/E9/28

IX. TECHNICAL SPECIFICATION FOR FIRE PROTECTION WORKS

1.	Standard specification for Fire Detection and Alarm System	MEC/TS/05/28/081/11
2.	Standard specification for Gas/ Clean Agent Flooding System	MEC/TS/05/28/081/06

TECHNICAL SPECIFICATION FOR MECHANICAL WORKS

Rev. : 0
Edition : 1

SPECIFICATION
FOR
MAINLINE CONSTRUCTION (ONSHORE)

SPECIFICATION NO.: MEC/S/05/21/01

(OIL & GAS SBU)
MECON LIMITED
DELHI 110 092

CONTENTS

SL.NO.	DESCRIPTION
1.0	SCOPE
2.0	REFERENCE CODES, STANDARDS AND SPECIFICATIONS
3.0	REQUIREMENTS OF R.O.U. AND ACCESS THERETO
4.0	RIGHT-OF-WAY
5.0	HANDLING, HAULING, STRINGING AND STORING OF MATERIALS
6.0	TRENCHING
7.0	BENDING
8.0	LINING UP
9.0	LAYING OF PIPE
10.0	BACK-FILLING
11.0	TIEING-IN
12.0	SPECIAL INSTALLATIONS ON THE PIPELINE
13.0	WORKING SPREAD LIMITATIONS
14.0	CLEAN-UP AND RESTORATION OF RIGHT-OF-WAY
15.0	MAINTENANCE DURING DEFECTS LIABILITY PERIOD

1.0 SCOPE

1.1 This specification covers the minimum requirements for the various activities to be carried out by CONTRACTOR for or about the construction of cross-country pipelines.

1.2 The various activities covered in this specification include the following works of pipeline construction :

- Clearing, grubbing and grading of Right-of-way
- Construction of all temporary facilities required in connection with the WORKS
- Staking of the pipeline route
- Handling, hauling, stringing and storing of all materials
- Trenching
- Field-bending of line pipe
- Lining-up
- Pipeline laying
- Backfilling
- Tieing-in
- Installation of auxiliary facilities and appurtenances forming a part of pipeline installation
- Clean-up and restoration of Right-of-way;
- Maintenance during defects liability period.

1.3 This specification shall be read in conjunction with the conditions of all specifications and documents included in the CONTRACT between COMPANY and CONTRACTOR.

1.4 CONTRACTOR shall, with due care and vigilance, execute the work in compliance with all laws, by-laws, ordinances, regulations etc. and provide all services and labour, inclusive of supervision thereof, all materials, excluding the materials indicated as "COMPANY Supplied materials" in the CONTRACT, equipment, appliances or other things of whatsoever nature required in or about the execution of the work, whether of a temporary or permanent nature.

1.5 CONTRACTOR shall take full responsibility for the stability and safety of all operations and methods involved in the WORK.

1.6 CONTRACTOR shall be deened to have inspected and examined the work area(s) and its surroundings and to have satisfied himself so far as practicable as to the form and nature thereof, including sub-surface conditions, hydrological and climatic conditions, the extent and nature of the WORK and materials necessary for the completion of the WORK, and the means of access to the work area(s).

1.7 CONTRACTOR shall be deemed to have obtained all necessary information subject as above mentioned as to risks, contingencies and all other circumstances, which may influence the WORK.

1.8 CONTRACTOR shall, in connection with the WORK, provide and maintain at his own costs, all lights, guards, fencing, watching etc., when and where necessary or required by COMPANY or by any duly constituted authority and/ or by the authorities having jurisdiction thereof for the protection of the WORK and properties or for the safety and the convenience of public and/ or others.

2.0 REFERENCE CODES, STANDARDS AND SPECIFICATIONS

2.1 Reference has been made in this specification to the latest edition of the following codes, standards and specifications :

a)	ANSI B 31.8	-	Gas Transmission and Distribution Piping Systems
b)	ANSI B 31.4	-	Liquid Petroleum Transportation Piping Systems
c)	API 1104	-	Standard for Welding Pipelines and Related Facilities
d)	API 1105	-	Bulletin on Construction Practices for Oil and Products Pipelines
e)	Part 1992 Title 49	-	Transportation of Natural and Other Gas by Pipeline (US Department of Transportation - Pipeline Safety Standards)
f)	Part 195	-	Transportation of Liquids by Pipeline (US Department of Transportation - Pipeline Safety Standards).

In case of differences between the requirements of this specification and that of the above referred codes, standards and specifications, the requirements of this specification shall govern.

2.2 For the purpose of this specification the following definitions shall hold:

- the words "Shall" and "Must" are mandatory.

- the works "Should, "May" and "Will" are non-mandatory, advisory or recommended.

3.0 REQUIREMENTS OF R.O.U. AND ACCESS THERETO

CONTRACTOR shall, before starting any clearing operations, familiarise himself with all the requirements of the Authorities having jurisdiction over the Right of Way for work along the pipeline route or in connection with the use of other lands or roads for construction purpose.

CONTRACTOR shall notify COMPANY well in advance during work progress, the method of construction for crossing road, pipeline, cable, railway, river and other existing obstacles.

CONTRACTOR shall not commence work on such crossings before having obtained approval from the authorities and land owners concerned to the satisfaction of COMPANY. The crossings shall be installed to meet at all times the requirements and conditions of the permit issued by the authorities concerned. In the absence of any specific requirements by authorities, CONTRACTOR shall comply with COMPANY'S instructions.

The right of ingress and egress to the ROW shall be limited to points where such ROW intersects public roads, Arrangements for other access required by the CONTRACTOR shall be made by him at his own cost and responsibility, and for such access, the conditions of this specifications shall also apply.

Where the ROW comes within 30 metres of an existing line or facility, CONTRACTOR shall propose and provide methods to safe-guard the existing line or facility (e.g. a demarcation fence). No work is allowed in such area without COMPANY's prior approval.

3.1 Safety measures during construction of pipelines inside the area influenced by high voltage lines

3.1.1 General

Pipelines which are constructed inside the area of high voltage lines may be electrically influenced by the high voltage lines. The voltage caused by the influence may at times be high enough to pose danger to personnel working on the pipeline. It is imperative therefore, that the instructions given below should be strictly observed.

3.1.1.1 It is a necessity that all personnel working on the pipeline which is being laid in the area influenced by the high voltage systems, be given clear instructions on measures to be taken.

3.1.1.2 Vehicles and equipment must be earth-connected. This may be effected by attaching an uninsulated cable or chain (which touches the ground) of adequate length to the underside of the vehicle.

3.1.1.3 If its not impossible for plant and/ or materials to come within 50m of the centre of the high voltage systems, special measures must be taken to prevent any approach beyond that distance, unless article 3.1.2 is complied with.

3.1.1.4 DURING THUNDERSTORMS OR WHEN DISCHARGES ARE OBSERVED ON INSULATORS ALL PERSONNEL MUST LEAVE THE AREA OF THE HIGH VOLTAGE LINE AND PIPELINE.

3.1.1.5 To prevent electrical voltage in a non-buried section of the pipeline from rising to dangerous levels, the length of the pipeline section which has been welded together before burial must not exceed the length at which the max. admissible voltage may be induced. This length may be calculated using an approved calculation method.

3.1.1.6 Before a pipeline section is lowered into the trench the structure's earth electrodes indicated in the drawings or determined with calculation method must have been installed and connected both to the pipeline section already buried and to the section which is about to be buried. The electrical connections which serve the purpose of preventing dangerous voltages must have a min. area of $35mm^{2.}$

Said connections must not be interrupted until after the permanent safety earth connections have been installed and connected to the entire uninterrupted pipeline.

3.1.1.7 The welded connection between the pipeline section and the section already buried must be installed at a distance of at least 50m from the nearest point of a pylon base.

3.1.1.8 Personnel doing work inside the area of influence of the high voltage system must wear electrically insulating foot-wear (e.g. rubber kneeboots) and wear insulating rubber or plastic gloves.

3.1.2 **Additional measures for work at less than 50m from the centre of the high voltage system.**

If work is done at less than 50m from the centre of the high voltage system, the regulations below must be complied with in addition to the rules specified in clause 3.1.1.

3.1.2.1 The work must not be started until agreement has been reached with the authorities which controls the high voltage system, about the implementation of the safety measures specified in this section.

3.1.2.2 Measures must be taken to prevent excavating and hoisting equipments from approaching high voltage lines to within any of the following distances.

This distance depends on the voltage carried. For individual connections the distance must be :

0	-	50 KV	3m
40	-	200 KV	5m
200	-	380 KV	8m

The measures taken may be as follows :

1. Special selection of equipment, or limiting or blocking certain directions of movement, or limiting the operational area, thereby making it impossible for any work to tbe done at a distance from the high voltage line of less than the accepted minimum.

2. In case the measures recommended in 1. above are not feasible, installation of clearly visible markers of sufficient height or laying out a "no passage beyond this point" line of drums painted bright red and white must prevent any work being done inside the danger area. Further, an inspector must be prevent all the time.

3.1.2.3 In the event that a vehicle, crane etc. should accidently come into contact with a live cable of a high voltage system or flash-over of electrical charge occurs, the driver must not leave his vehicle because this will pose a serious threat to his life.

The vehicle or crane must break the contact WITHOUT ANY HELP FROM OUTSIDE.

The driver must not leave his vehicle unitl be has managed to leave "the dangerous area, or alternatively, when the Electricity Authorities have given notice that the cable(s) have been put out of circuit. In case a serious fire starts in the vehicle, he is permitted to jump from the vehicle, clearing it as far as possible, while the jump should possible be to a dry spot.

4.0 RIGHT-OF-WAY

The CONTRACTOR is required to perform his construction activities within the width of Right-of-way set aside for construction of pipeline, unless he has made other arrangements with the land owner and/ or tenant for using extra land. Variation in this width caused by local conditions or installation of associated pipeline facilities or existing pipelines will be identified in the field or instructed to the CONTRACTOR by COMPANY.

The ROW boundary lines shall be staked by the CONTRACTOR, so as to prepare the strip for laying the pipeline. CONTRACTOR shall also establish all required lines and grades necessary to complete the work and shall be responsible for the accuracy of such lines and grades.

4.1 Staking

Prior to cleaning operations CONTRACTOR shall :

1) Install Bench Marks, Intersection Points and other required survey movements.

2) Stake markers in the centreline of the pipeline at distance of maximum 100 metres for straight line sections and maximum 10 metres for horizontal bends. Wherever ROW centreline has been staked on ground, CONTRACTOR shall exercise care in accurately staking the pipeline centreline, in consultation with COMPANY.

3) Stake two ROW markers at least at every 100 metres.

4) Set out a reference line with respect in pipeline centreline at a convenient location. Markers on reference line shall be at a distance of maximum 100m for straight line sections and maximum 10m for horizontal bends.

5) Install distance markers locating and indicating special points, such as but not limited to :

- Contract limits, obstacle crossings, change of wall thickness, including corresponding chainage, etc.

ROW markers shall be staked out at the boundary limits of Right-of-way wherever possible. ROW markers shall be painted red with numbers painted in white. Number shall be identical to centreline marker number with letters A (left side) and B (right side) added, (looking, in flow direction). Reference markers shall also carry the same information as its corresponding centreline markers.

Markers shall be of suitable material so as to serve their purpose and shall be coloured distinctly for easy identification. CONTRACTOR shall be responsible for the maintenance and replacement of the reference line markers until the permanent pipeline markers are placed and the as-built drawings are submitted and approved.

Any deviation from the approved alignment shall be executed by CONTRACTOR after seeking COMPANY approval in writing prior to clearing operations.

4.2 Monuments

All shrines, monument, border stones, stone walls and the like shall be protected and shall be subjected to no harm during construction. Any violation of the above by the CONTRACTOR shall be brought to the notice of the COMPANY and other concerned authorities. Restoration of the above shall wholly be the responsibility of the CONTRACTOR.

4.3 Fencing

Prior to clearing or grading of the Right-of-way or stringing of pipe, CONTRACTOR shall open fences on or crossing the construction Right-of-way and install temporary gate of sound construction made of similar materials and suitable quality to serve purpose of original fence. Adjacent post shall be adequately braced to prevent slackening of the remainder of the fence. Before such fences are cut and opened, CONTRACTOR shall

notify the land owner or tenant, and where practicable, the opening of the fences shall be in accordance with the wishes of said owner and tenant. In all cases where CONTRACTOR removes fences to obtain work route, CONTRACTOR shall provide and install temporary fencing, and on completion of construction shall restore such fencing to its original condition.

CONTRACTOR shall install temporary fencing on either side of ROW where in COMPANY's opinion, it is considered essential to ensure safety and non-interference, especially in areas like grasing lands, villages etc.

Fencing shall be removable type wherever necessary, to permit crossing of traffic. The type of fencing must be suitable for the situation in accordance with user. The pole distance shall not be greater than 6m. The minimum height of the fencing shall be 1.2m above grade. Fencing can consist of one or more rows of smooth wire and/ or of barbed wire.

Fencing shall be continuously maintained and the thorough-ways inspected to be shut during the execution of the work.

4.4 **Row Clearing and Grading**

4.4.1 All stumps shall be grubbed for a continuous strip, with a width equal to trench top width plus two metres on either side centred on the pipeline centreline. Further, all stumps will be grubbed from areas of the construction Right-of-way, where Right-of-way grading will be required. Outside of these areas to be graded and the mentioned trench strip, at the option of CONTRACTOR, the stumps may either be grubbed or cut off to ground level. Any stump cut off must be left in a condition suitable for rubber-tyred pipeline equipment traffic.

4.4.2 All grubbed stumps, timber, bush undergrowth and root cut or removed from the Right-of-way shall be disposed of in a manner and method satisfactory to COMPANY, land-owner and/ or tenant, and Government Authorities having jurisdication and as soon as practical after the initial removal. In no case, it shall be left to interfere with the grading and laying operations. Whenever stumps are grubbed and a hole is left in the ground, CONTRACTOR shall back-fill the hole and compact it to prevent water from gathering in it and creating a big hole.

4.4.3 CONTRACTOR shall grade the pipeline Right-of-way as required for proper installation of the pipeline, for providing access to the pipeline during construction, and for ensuring that the pipeline is constructed in accordance with the good engineering and construction practices.

4.4.4 CONTRACTOR shall grade sharp points or low points, without prejudice to section 6.0 of this specification, to allow the pipe to be bent and laid within the limits set forth in these specifications and drawings as regards the minimum elastic curvature permitted, and shall drill, blast or excavate any rock or other material which cannot be graded off with ordinary grading equipment in order to make an adequate working space along the pipeline.

4.4.5 No temporary or permanent deposit of any kind of material resulting from clearing and grading shall be permitted in the approach to roads, railways, streams, ditches, drainage ditches and any other position which may hinder the passage and/or the natural water drainage.

4.4.6 The Right-of-Way clearing and grading operations shall in no case involve embankment structures of any type and class without prior approval of the authorities having jurisdiction over the same.

4.4.7 In the case of natural or artificial deposits of loose soil, sand, heaps of earth, or other fill materials, these shall be removed till stable natural ground level is reached so as to ensure the construction of the pipeline ditch is in stable ground.

4.4.8 In the case of Right-of-Way clearing and grading on hillside or in steep slope areas, proper barriers or other structures shall be provided to prevent the removed materials from rolling downhill. The Right-of-Way crossfall shall not exceed 10%.

4.4.9 Wherever the pipeline Right-of-Way runs across plantations, alongside farmyards, built up areas, groups of trees, horticultural spreads, gardens, grass-fields, ditches, roads, paths, railways or any other area with restrictions of some kind, CONTRACTOR shall grade only the minimum area required for digging and constructing the pipeline. In the said places, CONTRACTOR shall carry out the works in such a way that damage done from the pipeline construction is kept to a minimum.

4.5 **Provision of Detours**

CONTRACTOR shall do all necessary grading and bridging at road, water and other crossings and at other locations where needed, to permit the passage of its men and equipment. It is understood that the CONTRACTOR has recognised such restricctive features of the Right-of-Way and shall provide the necessary detoors and execute the works without any extra cost to COMPANY. Public travel shall not be inconvenienced nor shall be wholly obstructed at any point.

CONTRACTOR at his own cost shall furnish and maintain watchman detours, lanterns, traffic lights, barricades, signs, wherever necessary to fully protect the public.

CONTRACTOR shall be responsible for moving its equipment and men across or around watercourses. This may require the construction of temporary bridges or culverts. Temporary bridging or access to fording required for Right-of-Way crossing water courses shall be constructed. CONTRACTOR shall ensure that such temporary works shall not interfere with normal water flow, avoid overflows, keep the existing morphology unchanged and shall not unduly damage the banks or water courses. No public ditches or drains shall be filled or bridged for passage of equipment until CONTRACTOR has secured written approval of the Authorities having jurisdiction over the same. CONTRACTOR shall furnish COMPANY a copy of such approval.

4.6 **Steep and Rocky Terrain**

Grading operations could normally be carried out along the Right-of-way with mechanical excavators or manually. In certain areas, grading may have to be resorted to exclusively by blasting.

In rough or steep terrain, CONTRACTOR may have to grade access roads and temporary bypass roads for its own use. Where such access roads do not fall on the Right-of-Way, CONTRACTOR shall obtain necessary written permission from land owners and tenants and be responsible for all damages caused by the construction and use of such roads, and at no extra cost to COMPANY, Wherever rocky terrain is encountered, grading shall be carried out in all types of solid rocks which cannot be removed until loosened by blasting, drilling, wedging or by other recognised means of quarrying solid rocks.

Where use of explosives is required in connection with Right-of-Way grading and trenching, CONTRACTOR shall comply fully with requirements of the use of explosives as provided under clause 6.3 of this Specification.

4.7 **Off Right-of-Way Damages**

CONTRACTOR shall confine all its operations within limits of the Right-of-Way. Any damage to property outside ROW shall be restored or settled to the CONTRACTOR's account.

CONTRACTOR shall promptly settle all off Right-of-Way damage claims. Should CONTRACTOR fail to do so, COMPANY shall give written notice to CONTRACTOR that if CONTRACTOR does not settle such claims within seven days after such notice, COMPANY shall have the authority to settle claims from the account of the CONTRACTOR.

5.0 HANDLING, HAULING, STRINGING AND STORING OF MATERIALS.

5.1 **General**

The CONTRACTOR shall exercise utmost care in handling in pipe and other materials. CONTRACTOR shall be fully responsible for all materials and their identification until such time that the pipes and other materials are installed in permanent installation. CONTRACTOR shall be fully responsible for materials, however, method of storage shall be approved by COMPANY.

CONTRACTOR shall reimburse the COMPANY for the cost of replacement of all COMPANY supplied materials damaged during the period in which such materials are in the custody of the CONTRACTOR. It shall be CONTRACTOR's responsibility to unpack any packing for the materials supplied by COMPANY.

5.1.2 **"Taking Over" of Line Pipe**

The following stipulations shall apply in case CONTRACT provides for supply of line pipe, bare and/or corrosion coated, by COMPANY.

CONTRACTOR shall receive and 'take over' against requisition, line pipe from the COMPANY's designated place(s) of delivery as defined in the CONTRACT. CONTRACTOR shall perform visual inspection of the bare pipes and coating of the corrosion coated pipes, as the case may be, in the presence of COMPANY and all damages shall be recorded. In the case of corrosion coated pipes CONTRACTOR at his option may carry out holiday detection at a prescribed set voltage and record such holidays, in the presence of COMPANY, at the time of 'taking over'. However, if CONTRACTOR proposes to perform only visual inspection of coating, then repair of all holidays found at the time of laying the pipeline shall be carried out by the CONTRACTOR at no extra cost to COMPANY. The CONTRACTOR shall be entitled to extra compensation for repair and rectification of defects recorded at the time of taking over as per the rate set forth in the "CONTRACT". Repair of all damages after taking over the delivery of the materials shall be to the CONTRACTOR'S cost. In case of delay in handing over of COMPANY supplied material, CONTRACTOR shall be fully responsible for stopping and rearranging means of transportation at no extra cost to the COMPANY.

5.2 **Handling and Hauling of Line Pipe**

5.2.1 **Bare Pipe**

CONTRACTOR shall unload, load, stockpile and transport the bare pipes using suitable means and in a manner to avoid denting, flattening, or other damage to pipes. Pipe shall not be allowed to drop or strike objects which will damage the pipe but shall be lifted or lowered from one level to another by suitable equipment. Lifting hooks when used, shall be equipped with a plate curved to fit the curvature of the pipe. In loading pipe on trucks each length shall be lowered to position without dropping and each succeeding length shall rest on special supports on the truck and shall be separated from the adjacent pipes. After loading, suitable chains and padding shall be used to tie the load securely to each bolster. Pipes, when stock piled, shall be placed on suitable skids to keep them clear of the ground and flood water. The CONTRACTOR shall provide all necessary timber or other materials required for the stock-piling. While stacking, the number of allowable layers of bare pipes shall be calculated as per API RP5L1 and shall be agreed with COMPANY. The stacks must be properly secured against sliding and shall consist of pipes of the same diameter and wall thickness. Adjacent stacks of pipes having different dimensional characteristics shall be clearly separated.

Pipes which are damaged at the time of delivery or "taking-over" (when line pipe is supplied by COMPANY), particularly those which are dented, buckled, or otherwise permanently deformed, must be stacked separately and may be transported to the sites only when these defects have been repaired or eliminated.

5.2.2 **Corrosion Coated Pipes**

The CONTRACTOR shall load, unload, transport and stockpile the coated pipes using approved suitable means and in a manner to avoid damage to the pipe and coating. CONTRACTOR shall submit to the COMPANY, a complete procedure indicating the manner and arrangement used for handling and stacking of coated pipes for COMPANY approval prior to commencement of handling operations.

Use of vaccum lifting equipments are preferred. Hooks may also be used for handling the pipes provided they have sufficient width and depth to fit the inside of the pipe and covered with soft material like rubber, teflon or equivalent, so as not to cause damages to bevel or pipe ends. During hoisting, cables/wire ropes shall have sufficient inclination compared to pipe axis so that they do not come into contact with external coating.

Coated pipes may be handled by means of slings and belts of proper width (minimum 60mm) made of non-metallic/non - abrasive materials. In this case, pipes to be stacked shall be separated row by row to avoid damage by rubbing the coated surface in the process of taking off the slings. Use of round sectional slings are prohibited.

During handling, suitable handling equipment with proper length of booms shall be used. Fork lifts may be used provided that the arms of the fork lift are covered by suitable pads preferably rubber. Before lifting operations it is essential to ensure that the pipe surface is free from foreign material with sharp edges. Belts/slings when used shall be cleaned to remove hard materials such as stone, gravel etc. Coated pipes shall not be bumped against any other pipe or any other objects. Rolling, skiding or dragging shall be strictly forbidden.

Coated pipes at all times shall be stacked completely clear from the ground so that the bottom row of pipes remain free from any surface water. The pipes shall stacked at a slope so that driving rain does not collect inside the pipe.

The coated pipes at all times shall be stacked by placing them on ridges of sand free from stones and covered with a plastic film or on wooden supports provided with suitable cover. This cover can, for example, consist of dry, germ free straw with a plastic film, otherwise foam rubber may be used. The supports shall be spaced in such a manner so as to avoid permanent bending of the pipes, particularly in case of small diameter pipes with low wall thickness. The pipes shall be stacked so that the uncoated bevelled ends are in line at one end thus making differences in length clearly noticeable.

Stacks shall consist of limited number of layers so that the pressure exercised by the pipe's own weight does not cause damages to the coating. Each pipe section shall be separated by means of spacers suitably spaced for this purpose. Stacks shall be suitably secured against falling down and shall consist of pipe sections having the same diameter and wall thickness. The weld bead of pipes shall be positioned in such a manner so as not to touch the adjacent pipes.

Coated Pipes stacked in open storage yards/dump yards shall be suitably covered on top to decrease direct exposure to sunlight.

The ends of the pipes during handling and stacking shall always be protected with bevel protecters.

The lorries/rail wagons shall be equipped with adequate pipe supports having as many round hollow beds as the number of pipes to be placed on the bottom of the lorry bed. Supports shall be provided for at least 10% of the pipe length. These supports shall be lined with a rubber protection and shall be spaced in a manner as to support equal load from the pipes. The rubber protection shall be free from all nails and staples where pipes are in contact. The second layer and all subsequent layers shall be separated from other layers with adequate number of separating layers of protective material such as straw in plastic covers or otherwise to avoid direct touch between the coated pipes.

All stachions of lorries/rail wagons used for transportation shall be covered by non-abrasive material like rubber belts or equivalent. Care shall be exerclsed to properly cover the top of the stanchions and convex portions such as reinforcement of the truck/rail wagon only, rivets etc. to prevent damage to the coated surface.

5.3 **Stringing of Pipe**

Pipes shall be unloaded from the stringing trucks and lowered to the ground by means of by means of boom tractor or swinging crane or other suitable equipment using lifting devices as mentioned earlier. Dragging or sliding of pipe shall not be permitted. Special precaution shall be taken during stringing of corrosion corrosion coated pipe as per the special requirements of previous para. Stringing of pipe shall only be carried out in daylight and after clearing and grading operations have been completed. Pipes shall not be strung along the ROW in rocky areas where blasting may be required, until all blasting is completed and the area cleared of all debris.

The stringing of the pipe on the ROW shall be done in such a manner so as to cause the least interference with the normal use of the land crossed and to avoid damage to and interference with the pipes. The sequence of pipes must be interrupted at suitable intervals, spaced to coincide with passages, roads, railwys, water crossings as well as at other places if requested by landowner / tenants to permit use of land.

In case line pipe supply is by different manufacturers s, CONTRACTOR shall string all line pipes of one manufacturer before commencing the stringing of line pipes of another manufacturer.

When parallel pipelines are being constructed, bumping against and contact with the strung sections of pipe shall be avoided, whether the stringing of the pipes for the individual lines is carried separately or simultaneously.

The pipe lengths shall be properly spaced in order to make easier the handling during the welding phase.

It shall be the responsibility of the CONTRACTOR to see that pipe is strung as per the approved drawings for the proper placement of pipe by size, thickness, grade and other specifications. Any additional handling of pipes due to failure to comply with the requirements shall be at the CONTRACTOR's expense.

5.4 Repair of Damaged pipes

After the pipes have been strung along the ROW, they shall be inspected by the CONTRACTOR and by the COMPANY. All defective pipe ends shall have to be repaired as per the directions of the COMPANY or as per the requirements of this specification.

5.5 **Materials other than linepipe**

CONTRACTOR shall receive and take over against requisition all COMPANY supplied materials from COMPANY's designated place(s) of delivery as defined in the CONTRACT. CONTRACTOR shall perform visual inspection and defects, if any noted, shall be recorded separately. The CONTRACTOR shall be entitled to extra compensation for repair and rectification of such defects at the rates set forth in the "CONTRACT".

The CONTRACTOR shall perform the necessary loading, unloading, hauling from points designated by the COMPANY and storing, if necessary, of all materials. The CONTRACTOR shall exercise care in handling, storing and distribution of materials in order to avoid damage and deterioration of these materials and prevent their theft or loss.

Materials excluding line pipe shall be stored in sheltered storages. Such materials shall not be strung on the Right-of-Way but shall be transported in covered conveyances for use only at the time of installation.

CONTRACTOR shall ensure that all valves and whenever applicable, other materials are fitted with suitable end covers of the type approved by COMPANY. Materials with worked surfaces such as flanges, pipe fittings, etc. must be stacked and handled so as to avoid contact with the ground or with substances that could damage them.

The manufacturer's instructions regarding temperature and procedure for storing materials which are subject to alteration of the original properties and cnaracteristics did to unsuitable storage must be strictly complied with and, if required, an adequate heat conditioning shall be provided for these materials.

When supplied in containers and packages they must not be thrown or dropped, not handled using hooks which could damage the container or the materials, either during loading/unloading or during successive handling, until their final use.

Storage of coating materials which are susceptible to deterioration or damages especially due to humidity, exposure to high thermal cconditions or other diverse weather conditions, shall be suitably stored and protected. These materials shall be

kept permanently in store, supported above the ground in a dry place, protected against the weather and transported for use only at the time and in quantities necessary for immediate application. Deteriorated materials shall not be used and replaced with no extra cost to COMPANY.

5.6 **Identification**

CONTRACTOR shall provide all pipes, bends, etc. greater than 2" with serial numbers as soon as possible and measure their length and state is on the pipes, etc. Pipes to be bent shall be measured prior to bending. Identification (i.e. letter, number and length) shall be indelible.

All serial numbers shall be recorded in a list, which shall also state appurtenant pipe numbers.

Beside recording the stamped - in pipe numbers, length of pipe and painted-on serial numbers, the stamped-in numbers of T-pieces, bends, valves, etc. and the batch numbers of bends, T-pieces, valves, etc. and the make of valves, shall also be recorded in said list.

Before a pipe length, pipe end, etc. is cut the painted serial number and stamped-in pipe number shall be transferred by CONTRACTOR in the presence of COMPANY to either side of the joint which is to be made by cutting, and the changes shall be recorded in the above mentioned list stating the (new) length. The results shall be such that all pipes, pups, etc. of diameter greater than 2" bear clear marks painted on.

CONTRACTOR shall explicitly instruct his staff that parts which cannot be identified must not be removed, except after permission by COMPANY.

As a general rule parts must be marked as described above before being moved. In no conditions may unmarked parts be incorporated into the WORK.

6.0 TRENCHING

6.1 **Location**

CONTRACTOR shall, excavate and maintain the pipeline trench on the staked center line of the pipeline taking into account the curves of the pipeline.

6.2 **Excavation**

6.2.1 CONTRACTOR shall, by any method approved by COMPANY, dig the pipeline trench on the cleared and graded Right-of-Way. In cultivable land and other areas specifically designated by the COMPANY, top 60mm of the arable soil on the pipeline trench top and 500mm on either side shall be excavated and stored separately to be replaced in original position after backfilling and compacting rest of the trench.

Suitable crossing shall be provided and maintained over the open ROW where necessary, to pemit general public, property owners or his tenants to cross or move stock or equipment from one side of the trench to the other.

Care shall be exercised to see that fresh soil recovered from trenching operation, intended to be used for backfilling over the laid pipe in the trench, is not mixed with loose debris or foreign material. The excavated material shall never be deposited over or against the strung pipe.

6.2.2 In steep slope area or on the hillside, before commencing the works, proper barriers or other protection shall be provided to prevent removed materials from rolling downhill.

6.2.3 On slopes where there is danger of landslide, the pipeline trench shall be maintained open only for the time strictly necessary. Forever, the COMPANY may require excavation of trench by hand, local route detours and limiting the period of execution of the works.

6.2.4 In certain slope sections before the trench cuts through the water table, proper drainage shall be ensured both near the ditch and the Right-of-Way in order to guarantee soil stability.

6.2.5 All sewers, drains ditches and other natural waterways involved in the execution of the works shall be maintained open and functional. The same applies to canals, irrigation canals, pipelines and buried facilities crossed by the ditch for which temporary pipeline shall be laid, if required, and proper temporary installations provided.

6.3 Blasting

Blasting for trenching and the related removal of scattered rock and debris caused by the blasting from the Right-of-Way and/or adjacent property, shall be performed by CONTRACTOR as part of his work.

Every possible precaution shall be taken to prevent injuries and damages to persons and properties during blasting operations, which shall be performed in accordance with Standard Rules for Blasting.

CONTRACTOR shall obtain necessary permits for storage and use of explosives and comply with the laws, rules and regulations of the respective Governmental agencies having jurisdiction thereof. No blasting will be allowed without prior and due notice given by CONTRACTOR to COMPANY, Government authorities, land-owners, property occupants, adjacent work crew, and other concerned parties.

CONTRACTOR shall employ only such workmen who are experienced in the type of work to be performed, to supervise, handle and use explosives.

6.3.1 Areas to be blasted are to be categorised as follows:

a) Where blasting is to be carried out beyond 50 meters away from any existing pipeline or structures (either above or below ground) the CONTRACTOR shall submit his proposed blasting procedure and perform a trial blast for COMPANY's approval.

b) Where blasting is to be carried out between 50 and 15 meters from any existing pipeline or structure (either above or below ground) the CONTRACTOR shall submit a procedure for controlled blasting e.g. break-holes, slit trench etc. which will also detail out safety precautions to safeguard the existing pipelines. This procedure will be approved by COMPANY prior to commencement and performing of trial blasting.

c) No blasting is allowed within 15 metres of any existing pipeline or structure (either above or below around).

6.3.2 All necessary precautions shall be taken to prevent stones from falling outside the Right-of-way and in cultivated areas and to avoid any damage to the installation and properties existing nearby.

6.3.3 Blasting and removal of debris shall be carried out prior to stringing the pipes.

6.3.4 Ground vibration due to blasting near the existing structures shall be continuously monitored using certified instruments to be provided by CONTRACTOR and approved by COMPANY and the peak particle velocities shall not exceed 50 mm/ sec.

COMPANY reserves the right to refuse blasting where possible danger exists to property, existing utilities or other structures. In such locations other methods of extracting rock shall be proposed by CONTRACTOR and shall be approved by COMPANY.

6.4 Normal Cover and Trench Dimensions

The trench shall be excavated to a minimum so as to provide, on both sides of the installed pipeline, a clearance as indicated in the job standard/ drawings and to a depth sufficient to provide the minimum cover as indicated below. The dimensions in the table below shall govern except as noted herein or as shown on the job standards or detailed construction drawings or as required by authorities having jurisdiction, whichever is greatest. Minimum depth of cover shall be measured from the top of pipe corrosion/ concrete weight coating (as applicable) to the top of undisturbed surface of the soil or top of graded working strip or top of road or top of rail whichever is lower. Fill material in working strip shall not be considered to add to the depth of cover. However, surface of fill material placed to fill hollows may be used to determine the depth of cover subject to prior approval by COMPANY.

Sl. No.	Location	Minimum Cover in meters
a)	Industrial, Commercial & Residential Areas	1.0
b)	Rocky Terrain	1.0
c)	Minor water crossings/ canals / drain / nala / stream	1.5
d)	River crossings for which scour depth is defined (below scour)	1.5
e)	River crossings (Bank width < 50 m) below lowest bed level)	1.5
f)	Other crossings (Bank width > 50 m) (below lowest bed level)	2.5 (for normal soil) 1.5 (for rocky strata)
g)	Water crossing by HDD (below least bed level)	2.5
h)	Uncased/ Cased Road Crossings/ Station approach	1.2
i)	Railroad Crossings	1.7
j)	Drainage, ditches at roads / railway crossings	1.0
k)	Marshy land and creek area	1.5

Notes :

In case pipeline is located within 1.5 m from any dwelling unit, the cover shall be increased by 300 mm over and above that specified.

6.5 **Cutting and Removal of Paving**

Whenever it is permitted by Authorities and / or COMPANY to open cut a paved road crossing, or where the line is routed within the road pavement, CONTRACTOR shall remove the paving in accordance with the restrictions and requirements of the authorities having jurisdiction thereof or as directed by COMPANY. The open cut for the road crossing shall be carried out only when the section of pipeline to be laid is complete. After laying the pipeline, backfilling shall be immediately performed and all the area connected with the works shall be temporarily restored.

Throughout the period of execution of such works, CONTRACTOR shall provide and use warning signs, traffic lights or lanterns, barricades, fencing, watchman, etc. as required by the local authorities having jurisdiction and/ or COMPANY.

For all roads, paths, walkway etc. which are open-cut, CONTRACTOR shall provide temporary diversions properly constructed to allow the passage of normal traffic with the minimum of inconvenience and interruptions.

The paving shall be restored to its original condition after the pipeline is installed.

6.6 Extra Depth and Clearance

At points where the contour of the earth way require extra depth to fit the minimum radius of the bend as specified or to eliminate unnecessary bending of the pipe according to customary good pipeline practice, or where a deep trench is required at the approaches to crossings of roadways, railroads, rivers, streams, drainage ditches, and the like, CONTRACTOR shall excavate such additional depth as may be necessary at no extra cost to the COMPANY.

CONTRACTOR shall excavate to additional depth where the pipeline approaches and crosses other pipelines, sewers, drain pipes, water mains, telephone, conduits, and other underground structures, so that the pipeline may be laid with at least 50 centimeters free clearance from the obstacle or as specified in the drawings, or such greater minimum distances as may be required by authorities having jurisdiction.

Where the pipeline crosses areas, whose easements specifically require greater than normal depths of cover, the trench shall be excavated to extra depth in accordance with the Right-of-way Agreements or as required.

CONTRACTOR shall excavate all such additional depths as may be necessary at no extra cost to the COMPANY.

6.7 Grades, Bends and Finish of Trench

The trench is to be cut to a grade that will provide a firm, uniform and continuous support for the pipe. Bends shall be made in the pipe at significant changes in grade of the trench. COMPANY reserves the right to set the grade of the trench and locate the bends if so desired, in which case CONTRACTOR shall excavate, at no extra cost, the trench and bend the pipe to such a grade. COMPANY desires to reduce to a minimum the required number of cold field bends to lay the pipe to conform to the general contour of the ground and maintain a normal cover. This can be accomplished by cutting the trench slightly deeper at the crest of ridges and by gradually deepening the trench in aproaches to crossings. Such trenching work shall be done by CONTRACTOR at no extra cost to the COMPANY.

COMPANY intends that there will be a minmum of hand grading of the trench bottom. However, to achieve this, CONTRACTOR will have to dig as square a bottom of the trench as possible with his equipment. This in part can be obtained by adjusting and

adopting the crumbling shoe and digging teeth of the trenching machines and by use of a drag behind the trenching machines or manually dressing-up the same. CONTRACTOR shall do such hand work in the trench as is necessary to free the bottom of the trench from loose rock and hard clods and to trim protruding roots from the bottom and side walls of the trench.

6.8 Padding

In all cases where rock or gravel or hard soil is encountered in the bottom of the trench, COMPANY will decide the exact extent of trench padding, that will be required. The thickness of the compacted padding shall not be less than 150mm. In those areas that are to be padded, the trench shall be at least 150mm deeper than otherwise required, and evenly and sufficiently padded to keep the pipe, when in place, at least 150mm above bottom of excavated trench.

Acceptable padding shall be placed under the pipeline before its installation, and around after installation to establish at both sides and on top of the pipe a permanent layer of padding. The thickness of compacted padding on top of pipe corrosion coating shall be at least 150mm. Padding materials that are approved by COMPANY shall be graded soil/ sand and/ or other materials containing no gravel, rock, or lumps of hard soil. Sand used for padding shall pass through sieve size ASTM-10 or ISO-2.00.

When specified in the CONTRACT, rock shield may be used in place of or in addition to sand padding as indicated above. Such rock shield shall be in accordance with the specification issued for the purpose and shall be subject to COMPANY approval.

6.9 Protection of Trench

CONTRACTOR shall keep the trench in good condition until the pipe is laid, and no claim is to be made to the COMPANY by reason of its caving either before or after pipe is laid.

All lumber, sheet-piling jacks or other materials, that may be necessary to shore the trench, in order to prevent caving are to be furnished and removed by CONTRACTOR.

CONTRACTOR shall dewater if necessary, using well point system or other suitable systems, shore, or do what else might be required to excavate the trench, install the pipe in it and backfill the trench in accordance with these specifications at no extra cost to COMPANY.

6.10 Protection of Underground Utilities and Special Methods

Details of some underground utilities, as far as acquired by COMPANY, shall be indicated in the Drawings. However, CONTRACTOR shall obtain plans and full details of all existing and planned underground services from the relevant Local Authorities and shall follow these plans closely at all times during the performance of work. CONTRACTOR shall be responsible for location and protection of all underground lines and structures. In special locations the use of trenching machine, backhoe may result

in damage to property and subsurface structures likely to be encountered during excavation. At such places, CONTRACTOR shall excavate the trench manually to same specification at no extra cost.

Where the pipeline crosses other underground utilities/ structures, the CONTRACTOR shall first manually excavate to a depth and in such a manner that the utilities/ structures are located.

Temporary under pinning or any other type of supports and other protective devices necessary to keep the interfering structure intact shall be provided by the CONTRACTOR at his own cost and shall be of such design as to ensure against their possible failure.

Despite all precautions, should any damage to any structure/ utility etc., occur, the Owner/ Authority concerned shall be contacted by the CONTRACTOR and repair shall forthwith be carried out by the CONTRACTOR at his expense under the direction and to the satisfaction of COMPANY and the concerned Owner/ Authority. If CONTRACTOR fails to repair in reasonable time, COMPANY reserves the right to have the repair executed at the cost of the CONTRACTOR.

6.11 Encroachments and Working near other utilities

In locations, where pipeline has to be laid in the body of a road, canal, dyke or other locations under jurisdiction of Government/ Public Bodies, the CONTRACTOR shall perform such work without extra compensation, according to the requirement of concerned Authorities. When it becomes necessary that CONTRACTOR has to resort to hand digging, well point, erection of sheet piling or any other special construction methods in these areas, no extra compensation shall be paid. CONTRACTOR shall contact the Authorities concerned in order to become familiar with their requirements.

In locations, where the pipeline has to be laid more or less parallel to an existing pipeline, cable and/ or other utilities in the Right-of-way, CONTRACTOR shall perform the work to the satisfaction of the Owner/ Authority of the existing pipeline/ cable/ utility. In such locations CONTRACTOR shall perform work in such a way that even under the worst weather and flooding conditions, the existing pipeline/ utilities remain stable and shall neither become undermined nor have the tendency to slide towards the trench.

CONTRACTOR shall be liable for any damage occuring to, or resulting from damage to other pipelines, underground structure/ utilities, as laid down in clause 6.10 of this specification.

6.12 Provisions for negative buoyancy to the pipe

CONTRACTOR shall check if up-floating danger is present in open trench and then shall take appropriate measures to prevent up-floating such as applying soil dams and dewatering of trench or temporary filling of water into the line (in exceptional cases).

In the case of water on the ditch bottom when the pipeline is being laid, the ditch shall be drained to the extent and for the time required to make a visual inspection of the ditch bottom. After this inspection, the presence of water will be allowed provided its level does not cause sliding of the ditch sides and pipe floating before backfilling when no concrete weighting is provided.

The water pumped out of the ditch shall be discharged into a natural water course.

Wherever up-floating of the pipeline after backfilling is to be reckoned with, anti-buoyancy measures shall be provided by CONTRACTOR for areas indicated in the drawings or as may be encountered during construction, using one or a combination of the following methods :

- weighting by applying a continuous concrete coating around the pipe;
- weighting by installing saddle weights;
- installing metal anchors screwed into the suboil in pairs;
- deeper burial of pipeline;
- provision of select backfill material.

The above provisions shall be in accordance with the relevant specifications and/ or job standards/ drawings.

7.0 BENDING

CONTRACTOR shall preferably provide for changes of vertical and horizontal alignment by making elastic bends. CONTRACTOR may provide cold field bends, at its option for change of direction and change of slope. COMPANY at its option, may authorise fabricated bends for installation at points where in COMPANY's judgement the use of such bends is unavoidable.
Overbends shall be made in such a manner that the center of the bend clears the high points of the trench bottom. Sag bends shall fit the bottom of the trench and side bends shall conform and leave specified clearance to the outside wall of the trench.

7.1 Elastic Bends

The minimum allowable radius for elastic bends in the buried pipeline including that for continuous concrete weight coated pipe shall be in accordance with relevant job standards. The elastic bend shall be continuously supported over its full length. A radius smaller than permitted in elastic bending shall require a cold bend.

7.2 Cold Field Bends

7.2.1 The radius of cold field bends shall not be less than 40 times the pipe nominal diameter for pipe diameter 18 inch and above and shall not be less than 30 times the pipe nominal diameter for pipe diameter less than 18 inch.

7.2.2 CONTRACTOR shall use a bending machine and mandrel and employ recognized and accepted methods of bending of coated pipe in accordance with good pipeline construction practice. However, bending machines shall be capable of making bends without wrinkles, buckles, stretching and with minimum damage to the coating.

7.2.3 CONTRACTOR shall, before the start of the work, submit and demonstrate to COMPANY a bending procedure which shall conform with the recommendations of the manufacturer of the bending machine. The procedure shall include amongst other steps - lengths, maximum degree per pull and method and accuracy of measurement during pulling of the bend. This procedure and the equipment used shall be subject to COMPANY's approval.

7.2.4 Pipes with longitudinal welds shall be bent in such a way that the weld lies in the plane passing through the neutral axis of the bend which shall be installed positioning the longitudinal weld in the upper quadrants. If horizontal deviations are to be achieved by joining more adjacent bends, the bending of the pipe lengths shall be made by positioning the longitudinal welds alternatively 70mm above and below the plane passing through the neutral axis in such a way that the bends are welded with the longitudinal welds displaced by about 150mm and situated in the upper quadrants. In case of vertical bends formed from a number of pipe lengths, the longitudinal welds shall be positioned on the plane passing through the neutral axis of the bend to the right and left alternatively.

7.2.5 The pads, dies and rolls of the bending equipment shall have relatively soft surfaces to avoid damage to the pipe coating. Where applicable, fully retaining bending shoes shall be used. Roller type bending machines are preferred.

7.2.6 The ends of each bent length shall be straight and not involved anyway in the bending. The length of the straight section shall permit easy joining. In no event shall the end of the bend be closer than 1.5m from the end of a pipe or within one meter of a girth weld.

7.2.7 The ovalisation caused on each pipe by bending shall be less than 2.5% of the nominal diameter at any point. Ovalisation is defined as the reduction or increase in the internal diameter of the pipe compared with the nominal internal diameter. A check shall be performed on all bends in the presence of COMPANY by passing a gauge consisting of two discs with a diameter equal to 95% of the nominal internal diameter of the pipe connected rigidly together at a distance equal to 300mm.

7.2.8 The wall thickness of finished bends, taking into account wall thinning at the outer radius, should not be less than the design thickness. An indication of wall thinning as a percentage is given by the following empirical formula :

$$\text{Wall Thinning} = \frac{50}{n + 1}$$

Where 'n' is the inner bend radius divided by pipe diameter. Pipes with measured wall thickness greater than the nominal wall thickness (i.e. with +ve tolerance) shall normally be used for making cold field bends.

7.2.9 Cold bent pipes on site shall have the corrosion coating carefully checked with the aid of a holiday detector for cracks in the coating down to the pipe wall. It must also be checked whether the coating has disbonded from the pipe wall during bending by beating with a wooden mallet along the outer radius. Any defects or disbonding of the coating caused during bending (also forced ridges in the coating) shall be repaired at the CONTRACTOR's expense in accordance with COMPANY approved procedures.

7.2.10 When pipelines are laid in parallel, the horizontal bends shall be concentric.

7.3 Miter and Unsatisfactory Bends

All bends showing buckling, wrinkles, cracks or other visible defects or which are in any way in disagreement, in whole or in part, with this specification shall be rejected.

No miter bends shall be permitted in the construction of the pipe line. CONTRACTOR shall cut out and remove any bend or bends which do not meet the specifications and shall replace the same with satisfactory bends at no additional cost to the COMPANY. In the event the CONTRACT provides for supply of line pipe by COMPANY, the pipes required for replacement will be furnished by COMPANY, but the cost of replacement of such pipes shall be borne by CONTRACTOR.
Cutting of factory made bends and cold field bends for any purpose are not permitted.

8.0 LINING UP AND WELDING

Each length of pipe shall be thoroughly examined internally and externally to make sure that it is free from visual defects, damage, severe corrosion (sea water pitting), dirt, animals or any other foreign objects. Each length of the pipe shall be adequately swabbed, either by use of canvas belt disc of proper diameter or by other methods approved by the COMPANY. Damaged/corroded pipes shall be kept separate. Each length of pipe shall be pulled through just before being welded.

All rust and foreign matters shall be removed from the beveled ends by power operated brush. This shall be affected inside & out side and for a minimum distance of 25 mm from edge of bevel. The bevel shall be thoroughly inspected at this stage. Should laminations, spilt ends or manufacturing defects in the pipe observed, the length of the pipe containing such defects shall be removed from the line in accordance with relevant specification.

Contractor shall align and weld together the Joints of pipe so as to construct a continuous pipeline. All welds in the pipeline made by Contractor shall be of strength equal to that of pipe. All welding shall conform to Company's welding specifications enclosed with the Contract.

8.1 Pipe Defects and Repairs

It is CONTRACTOR's responsibility to repair all internal and/or external defects.

8.1.1 Acceptability of defects in the pipe detected during inspection at the work site shall be determined in accordance with latest edition of COMPANY's own material specification or CODE ANSI B31.8/B 31.4 whichever is more stringent.

8.1.2 The maximum permissible depth of dents in pipes upto and including $12^{3/4"}$ OD is 5mm and for pipes over $12^{3/4"}$ OD is 2% of the nominal pipe diameter.

8.1.3 Dents which contain a stress concentrator such as scratch, gauge, arc burn or groove, and dents located at the longitudinal, spiral or circumferential weld shall be removed by cutting out the damaged portion of pipe as a cylinder.

8.1.4 Repair on line pipe shall be executed as specified in COMPANY's material specification or Code ANSI B 31.8/B 31.4, whichever is more stringent. A record of all repairs is to be maintained by CONTRACTOR. This record, provided with the pipe identification number is to be submitted to the COMPANY.

8.1.5 If due to cutting or repairs, the pipe identification number is removed, it shall be reprinted immediately by CONTRACTOR in the presence of COMPANY. In the event, the CONTRACT provides for supply of line pipe by COMPANY, CONTRACTOR shall be charged for any pipe length due to loss of identification number. No pipe without identification number shall be transported and/or welded into the pipeline.

8.1.6 Repair of damaged pipe ends by hammering and/or heating is not allowed. If the dented area is minor and at least 200mm away from the pipe end, and the steel is not stretched, severed, or split in the COMPANY's opinion, the pipe may be straightened with a proper jack.

8.2 Pipe Handling And Skid Spacing

8.2.1 When lifting pipe, care must be taken not to kink or overstress it. Proper pipe slings approved by COMPANY shall be used. CONTRACTOR shall submit his method of skidding and skid spacing for COMPANY's approval. A strip of soft material shall be placed in between skid and pipe to protect the external coating of the pipe. The material shall be approved by the COMPANY.

8.2.2 The maximum skid spacing is not allowed before the stringer bead and the top and bottom reinforcements are completed, provided that the distance between the incomplete weld and the skid shall not exceed 9 (nine) percent of the skid spacing.

8.2.3 Skids shall be atleast 1.20 meter long. For pipe with an O.D. of 12-3/4 inch and larger the skids in contact with the pipe shall have a width of at least 200mm. For pipe with an O.D. of less than 12 inch the skids in contact with the pipe shall have a width of atleast 150mm. Pipe supports shall be stable, so that pipe movement will not cause the supports to move. Skids shall not be removed under a string before lowering in.

The welded pipe shall be maintained on skids at the minimum distance of 500mm above ground. Crotches shall be installed at frequent intervals (atleast every 10th support) with a greater number required at bends and undulation grounds.

8.3 **Night Caps**

At the end of each day's work or every time when joining and welding operations are interrupted, the open ends on the welded strings of pipes shall be capped with a securely closed metal cap or plug as approved by COMPANY so as to prevent the entry of dirt, water, or any foreign matter into the pipeline. These covers shall not be removed until the work is to be resumed. The caps/plugs used shall be mechanical type and shall not be attached to pipe by welding or by any other means which may dent, scratch or scar the pipe.

8.4 **Temporary Caps**

Whenever the welded strings of pipes are left open at intervals to be tied in later after an appreciable time lag, under roads, railroads, rivers, marshy crossings, ets., temporary caps approved by COMPANY shall be welded to the ends of the pipe.

9.0 LAYING OF PIPE

9.1 **Lowering In Trench**

9.1.1 Lowering can start after removal from ditch bottom of all off cuts, pipe supports, stones, roots, debris, stakes, rock projections below underside of pipe and any other rigid materials which could lead to perforation or tearing of the coating. Sand padding and / or rock shield shall be provided as required in accordance with clause 6.8 of this specification.

9.1.2 Lowering shall follow as soon as possible, after the completion of the joint coating of the pipeline. In the case of parallel pipelines, laying shall be carried out by means of successive operations, if possible without interruption.

9.1.3 Before lowering in, a complete check by a full circle holiday detector for pipe coating and for field joint coating shall be carried out and all damages repaired at CONTRACTOR's cost. All points on the pipeline where the coating has been in contact with either the skids or with the lifting equipment during laying, shall be carefully repaired. If, after checking, it becomes necessary to place the pipeline again on supports at the bottom of the trench, these must be padded in such a way as to prevent damage to the coating, thus avoiding necessity for further repairs when the pipe is finally raised and laid. Before the last operation, a check must be made of the coating at points of contact with the supports.

9.1.4 Before lowering in, short completed sections of the pipeline shall be cleaned with compressed air in order to remove all dirt, etc. from the inside of pipe sections.

9.1.5 The pipeline shall be lifted and laid using, for all movements necessary, suitable equipment of non-abrasive material having adequate width for the fragility of the coating. Care shall be exercised while removing the slings from around the coated pipe after it has been lowered into the trench. Any damage caused to the coating shall be promptly repaired. Lowering in utilizing standard pipe cradles shall be permitted if CONTRACTOR demonstrates that pipe coating is not damaged. No sling shall be put around field joint coating.

9.1.6 Wherever the pipeline is laid under tension, as a result of an assembly error (for example, incorrect positioning of bends, either horizontal or vertical), the trench shall be rectified or in exceptional cases a new assembly shall be carried out, to be approved by COMPANY, so that it fits the excavation and the laying bed.

9.1.7 Laying shall be carried out under safe conditions so as to avoid stresses and temporary deformations of the equipments which may cause damage to the pipeline itself and to the coating. In localised points where the right-of-way is restricted to the minimum necessary for the transit of mechanical equipment, the laying shall be carried out using other suitable means. The pipe shall be placed on the floor or the excavation, without jerking, falling, impact or other similar stresses. In particular, care must be taken that the deformation caused during the raising of the pipe work from the supports, does not exceed the values for the minimum allowable radius of elastic curvature, so as to keep the stresses on the steel and on the coating within safe limits. The portion of the pipeline between trench and bank shall be supported by as many side-booms as required and approved by COMPANY for holding the line in gentle S-curve maintaining minimum elastic bend radius as specified in job standard. Lowering in and back-filling shall preferably be carried out at the highest ambient temperature.

9.1.8 The pipeline must be laid without interruption for the whole or the length of section available. Where water is present, no laying shall be permitted until the ditch has been drained to the extent and for the time necessary to make visual inspection possible of the bed on which the pipe is to be laid. Following such inspections, the presence of water will be permitted, provided that it is not so high as to cause cave-in of the walls of the trench or floating of the pipeline before backfilling, when weighting is not provided for the pipe.

9.1.9 CONTRACTOR shall take precautions immediately after lowering in to prevent the movement of the pipe in trench.

9.1.10 In laying parallel pipelines in the same trench, the minimum distances between the pipeline indicated in the approved drawings shall be observed. Once the first pipeline has been positioned, it shall in no way be disturbed by laying of the subsequent pipeline.

At every seven meters along the trench sand/earth filled bags shall be placed between the parallel pipelines so as to ensure maintenance of the minimum stipulated distance between the parallel lines.

9.2 **Overhead Sections and Sections in Tunnel**

9.2.1 The following works shall be completed before proceeding with the assembly and laying of overhead pipelines :

- Construction of the pipe support structures or of mounts on supports.
- Paints and/or coating of the pipework, as indicated in the engineering specification.

9.2.2 The erection of the supports shall be carried out taking care that the elevation and alignment is in accordance with the drawings.

In the case of metal work supports, prefabrication and/or assembly shall take into account the maximum allowed free span and the supports shall not interfere with the pipeline welds.

9.2.3 In case roller supports are used, the roller shall be lubricated, then checked for smooth rotation and, in case of seizure, the defect shall be repaired or roller shall be replaced. In the case of overhead section where the pipeline is slanting, the alignment of the end supports shall be made after placing the pipeline in position. Before installation of the pipe section, all the rollers shall be perfectly centered acting on the seat of the support plates.

The above alignment operations shall be carried out before connecting the overhead section with the ends of the buried section.

9.2.4 Lifting, moving and laying of the pipeline shall be carried out in accordance with the provisions of clause 9.1.5.

An insulation sheet shall be installed to isolate the pipe from the support or support from the earth.

The sheet shall be hard polyethylene at least 5mm thick.

It shall extend at least to 1cm outside the saddles or clamps.

9.2.5 Moving supports, if any, shall be centered on their support and allow for a movement of at least 300mm in both directions.

9.2.6 A comprehensive report/method statement on the laying operation to be used shall be submitted to the COMPANY well in advance for approval. The report as a minimum shall include, but not limited to the following:

(a) Method of installation by lifting (as a preferred method).
(b) Pulling method and related calculations, whenever lifting method cannot be used.
(c) Pulling device and its characteristics
(d) Method of anchoring the pulling device
(e) Characteristics of the pulling rope

(f) Braking device, if any
(g) Pipeline assembly systems.

10.0 BACK-FILLING

10.1 Backfilling shall not be done until the pipe and appurtenances have the proper fit and the pipe is following the ditch profile at the required depth that will provide the required cover and has a bed which is free of extraneous material and which allows the pipe to rest smoothly and evenly. Before any such work is done, it shall be the CONTRACTOR's responsibility to first secure the approval of COMPANY. If any backfilling is done without COMPANY's approval, COMPANY will have the right to require removal of the backfill for examination, and the cost of such uncovering and refilling shall be borne by CONTRACTOR. Backfilling of trench in water courses shall be carried out as per the relevant specifications issued for the purpose.

10.2 Backfilling shall be carried out immediately after the pipeline has been laid in the trench, inspected and approved by the COMPANY, so as to provide a natural anchorage for the pipeline, thus avoiding long exposure of coating to high temperature, damaging actions of adverse weather conditions, sliding down of trench sides and pipe movement in the trench. If immediate back filling is not possible, a covering of atleast 200mm of earth, free of rock and hard lumps shall be placed over and around the pipe and coating.

On no account the top soil from the ROW be used for this purpose. In general, the trench shall be dry during backfilling. Deviations there of must have prior approval of the COMPANY. The backfill material shall contain no extraneous material and/or hard lumps of soil which could damage the pipe / coating or leave voids in the backfilled trench. After the initial backfill has been placed into the trench to a level slightly above the surrounding ground, CONTRACTOR shall compact the backfill material. The surplus material shall be neatly crowned directly over the trench and the adjacent excavated areas on both sides of the trench as per clause 6.2.1, to such a height which will, in COMPANY's opinion, provide adequately for future settlement of the trench backfill during the maintenance period and thereafter. The crown shall be high enough to prevent the formation of a depression in the soil when backfill has settled into its permanent position. Should depression occur after backfill, CONTRACTOR shall be responsible for remedial work at no extra cost to COMPANY. Surplus material, including rock, left from this operation shall be disposed of to the satisfaction of land owner or authority having jurisdiction at no extra cost to the COMPANY.

For further requirements reference is made to Section of 14.0 "Clean-up and Restoration of Right-of-Way" of this specification.

10.3 Rock, gravel, lumps of hard soil or like materials shall not be backfilled directly onto the pipe unless 'padding' and/or rock shell has been provided as per Section 6.0 of this specification. When "Padding" as described in Section 6.0 of this specification is to be used, the following shall be applicable.

Where rock, gravel, lumps of hard soil or like materials are encountered at the time of trench excavation, sufficient earth, sand or select backfill materials shall be placed around and over the pipe to form a protective cushion extending at least to a height of 150mm above the top of the pipe. Select backfill materials for padding that are acceptable to COMPANY shall be soil, sand, clay or other material containing no gravel, rock or lumps or hard soil. Whether such padding material would be taken from the adjacent spoil bank or imported from elsewhere shall be directed by COMPANY. All these works shall be carried out by CONTRACTOR at no extra cost to COMPANY. Loose rock may be returned to the trench after the required selected backfill material has been placed, provided the rock placed in the ditch will not interfere with the use of the land by landowner, or tenant.

10.4 When the trench has been dug through drive ways or roads, all backfills shall be executed with sand or a suitable material as approved by COMPANY and shall be thoroughly compacted. In certain cases, special compaction methods, such as moistening or ramming of the backfill in layers may be required by COMPANY. COMPANY and any public or private authority having jurisdiction over a road, street or drive way may require that the surface of the backfill be graveled with crushed rock or some other purchased material and the road shall be repaved. In such instances, CONTRACTOR shall comply with said requirements at no extra cost to COMPANY.

10.5 Trenches excavated in dykes which are the property of railways or which are part of main roads shall be graded and backfilled in their original profile and condition. If necessary, new and/or special backfill materials shall be supplied and worked-up. The materials required may include gravel, special stabilization materials or stabilized mixtures. However, special processing and/or compacting methods shall require the approval of COMPANY and/or competent authorities.

10.6 The trench in irrigated and paddy fields shall be backfilled to within 300mm of the top, then rammed and further backfilled until the trench is completely backfilled. Surplus material remaining after the operation shall be spread over the ROW as specified in Section 14.0 "Clean-up and Restoration of Right-of-Way", of this specification.

10.7 At the end of each day's work, backfilling shall not be more than 500 meters behind the head end of lowered-in pipe, which has been padded and approved for backfill. The backfill shall be maintained by CONTRACTOR against washouts etc., until the completion and final acceptance of the work by COMPANY.

10.8 CONTRACTOR shall furnish materials and install breakers in the trench in steep areas (slope generally 10% and more) for the purpose of preventing erosion of the backfill. The type of breakers installed shall be as per the approved drawings. Breakers shall be constructed of grout bags filled with a mixture of 4:1 Sand:Portland cement at COMPANY's direction. CONTRACTOR may propose other methods such as foam dams etc. which shall be subject to approval by COMPANY. Such works shall be at no extra cost to COMPANY. CONTRACTOR shall pay attention to the direction of backfilling in such steep areas.

10.9 When backfilling the trenches in sloping terrains or steep areas, where in the opinion of the COMPANY, the backfill may be washed out of the trench, sheet piling or other effective water breakers across the trench shall be provided by CONTRACTOR. This is to divert the flow of water away from the trench into normal drainage followed before laying the line. In no case, the water is to be drained via the trench or via channels other than those followed before the line was laid.

10.10 CONTRACTOR shall leave the pipe uncovered at certain locations to allow COMPANY to survey the center line of the pipe and the level of the pipeline in the backfilled trench. Within 48 hours after backfilling, COMPANY shall have carried out such survey and informed CONTRACTOR of any realigning, if required. Thereafter CONTRACTOR shall compact the backfill.

The maximum allowable deviation from the centerline for land sections as staked out by COMPANY and as referenced by CONTRACTOR after backfilling is limited to:

Pipeline dia upto and including 24" : 200mm

Pipeline greater than 24" : 300mm

10.11 Before backfilling of the trench, CONTRACTOR shall comply with the requirements of Clause 6.12 of this specification.

10.12 Stabilization of backfill shall be carried out by the CONTRACTOR in sandy areas and other such places to obtain consolidated cover as directed by the COMPANY. CONTRACTOR shall carry out the stabilization over the pipeline at no extra cost to COMPANY.

The backfill shall be stabilized preferably with 150mm layer of marl, mattresses of gatch other than straw or other stable materials. The width of stablisation shall be atleast 5.0 meters on either side of the pipeline, plus one meter for every 10 meters height of dune (where the line passes through the dune areas).

10.13 Temporary workers shall be installed during backfilling and the survey as per clauses 10.10 to locate the pipeline axis. These markers shall then be replaced with permanent pipeline markers.

10.14 Backfilling shall be preferably carried out at the highest ambient temperature.

11.0 TIEING-IN

11.1 The unconnected sections of the pipe line at various locations have to be tied in after the sections are coated, lowered and backfilled. The sections to be connected shall have at the ends, sections of over lapping, uncovered pipe of sufficient length to absorb, without inducing excessive stresses in the steel, small displacements necessary for perfect alignment and connection of the ends.

11.2 Tie-in shall preferably be carried out at ambient temperatures corresponding to the average operating temperature in the case of a pipeline conveying fluids at normal temperatures and at the maximum ambient temperature in the case where the pipeline is carrying fluids at high temperature.

11.3 CONTRACTOR shall carry out tie-in-welding (including necessary cutting, bevelling, grinding of pipe weld seams and line-up etc.) cleaning, priming, coating and backfilling for the tie-in portion as per relevant specifications. CONTRACTOR shall also excavate the required bell-holes for the connection. Bell-holes made to facilitate welding shall provide adequate clearance to enable the welders to exercise normal welding ability and skill. All tie-in welds shall be radiographically examined.

11.4 The tie-in should be done in such a way as to leave a minimum of strain in the pipe. If necessary, with respect to the trench, realigning of the pipe shall be done to eliminate force or strain in the pipe by the CONTRACTOR at no extra cost to COMPANY.

11.5 If a pup end cannot be avoided for tie-in, the minimum length that shall be added is 1.0 meters and two or more such pups shall not be welded together. All cut-off lengths greater than 1.0 meters shall be moved ahead in order to be welded into the pipeline at a suitable location. Tie-in with two or more pups may be used provided that they each have minimum length of 1.0 meter and are separated by an entire length of pipe. In no case more than three (3) welds shall be permitted on a 10 meter length of pipeline.

11.6 In connecting pipes, special items, fittings and equipment where different wall thickness are to be welded, CONTRACTOR shall follow the procedures indicated in ANSI B31.8/ANSI B31.4, as applicable. The required tapering shall be done by CONTRACTOR at no extra cost to COMPANY.

11.7 For tie-in of adacent sections of pipeline already pressure tested, the pup used for tie-in shall be of single length or off-cuts of pipe which have already been hydrostatically tested. CONTRACTOR shall take care that sufficient number of pretested pipes with different wall thicknesses are readily available.

12.0 SPECIAL INSTALLATIONS ON THE PIPELINE.

12.1 General

12.1.1 In addition to constructing the pipeline, CONTRACTOR shall also install certain other auxiliary facilities and appurtenances.

CONTRACTOR shall do all work necessary at each of the installations to provide facilities which are complete in all respects and ready for operation.

Without limiting the generality thereof, the work required to complete the installations shall, where applicable, include all site surveys, site preparation, filling, grading, fencing, foundations, installation of block valves, side valves, pipework, pipe supports, pressure gauges, mechanical facilities, civil work, painting, installation of all electrical

equipments, motors, cables, conduIt, wiring and fixtures and hooking up of same; installation of all instruments, piping, valves and fittings; mount all instruments and make all piping and electronic connections, etc.

On completion, all elements of each installation shall be checked our and tested for full and correct operation in the presence of and to the satisfaction of COMPANY. All work shall be carried our strictly in accordance with the appropriate codes, the approved drawings, and this and other related specifications.

CONTRACTOR shall fabricate all piping and install valves and fittings as required by the detailed engineering drawings prepared by him and approved by COMPANY.

Stainless steel lines will be "swaged" using permanent fittings installed with a hydraulic device.

Cold bending for the fitting of 1/2" and 1/4" pipes is allowed when special bending tools are used with guides to prevent flattening. The minimum radius allowed shall not be less than R = 10 D where D is the outside diameter of pipe.

The bending tool shall be subject to COMPANY's approval.

CONTRACTOR shall ensure that the piping assemblies are not in a strain prior to the final bolting or welding. CONTRACTOR shall also ensure that all equipment and piping are thoroughly swabbed clean of all dust, refuse, welding-spatter, scale, or any potentially detachable matter prior to the tie-in or final bolting.

12.1.2 **Dimensional tolerances.**

These tolerances apply to in line items and corrections for other lines. These tolerances can be executed on items such as vents, drains, dummy supports, field supports, temperature and pressure connections, where the deviation will not affect another spool.

a) General dimension such as face to face, face or end to end, face or end to center, and center to center : ± 3 mm.
b) Inclination of flange face from true in any direction: 4 mm per meter.
c) Displacement of branch connection from indicated location: ± 1.6mm. When multiple branches are involved, the displacement of the branches shall not exceed 3mm from a common point.
d) Rotation of flange bolt holes shall not exceed 1.6 mm.

12.1.3 **Flanged connections.**

CONTRACTOR shall ensure that all flange faces are parallel and centered, according to standard practice, prior to final bolting. CONTRACTOR shall not use bolting forces as a means for attaining alignment. A gasket of proper size and quality shall be installed between the flanges at each joint.

Bolts shall be tightened in diagonal sequence and shall be centered with equal amounts of thread visible on both sides. Bolts shall be uniformly tightened to produce a leak-proof joint. Bolts that yield during tightening shall be remover and discarded. It is mandatory that a torque wrench is used for bolt tightening.

12.1.4 **Threaded connections.**

Damaged threads shall be cut from the end of a run and the pipe shall be rethreaded.

CONTRACTOR shall properly align all threaded joints. Pipe entering unions shall be true to centreline so the union will not be forced during tightening. The threaded pipe shall not project through fittings to cause interference with valves or other operating mechanisms.

Except for the threaded connections of instruments, which will require periodic testing and maintenance, all threaded connections shall be seal welded. The latter joints shall be made up without pipe joint compound and with a minimum of oil from the threaded cutter. Seal welds should taper into the pipe with as little discontinuity as possible and should cover all threads.

12.1.5 **Welded connections**

Where the Ends of the piping components being welded have an internal surface misalignment exceeding 1.6mm, the wall of the component extending internally shall be trimmed by machining so that the adjoining internal surfaces will be approximately flush. All welding shall be performed in accordance with the specification " Specification for welding of pipelines and related facilities".
Tie - ins between fixed points shall be made at maximum ambient temperature.

.

12.1.6 **Civil Work**

Civil work shall be provided in accordance with Specifications issued for the purpose.

12.1.7 **Painting**

All exposed surfaces like piping, valves, structures, and miscellaneous appurtenances shall be painted in accordance with the specifications issued for this purpose. The corrosion coating on pipe surface will end approximately 0.3 meter above the finish grade and it will be necessary for CONTRACTOR to provide a clean interface at the junction of the protective coating and the paint.

12.1.8 **Coating of buried-Installations, etc.**

All buried valves, insulating joints, flowtees, bends, other in-line fittings and appurtenances shall be coated with minimum three coats of approved quality of coal-tar epoxy or any other equivalent suitable COMPANY approved coating at no extra cost to the COMPANY. For buried pipes either heat shrink tapes conforming to COMPANY's specification or coal tar epoxy shall be used. CONTRACTOR shall submit to COMPANY

a report used alongwith all the test certificates. Only after obtaining written approval from the COMPANY, CONTRACTOR shall commence the work of coating.

12.1.9 **Clean-up**

After all required tests have been concluded satisfactorily CONTRACTOR shall clean up the site as laid down in the specifications issued for the purpose. The Site finish shall be graded in accordance with the approved drawings.

12.2 **Installation of Valves and Valve Stations**

12.2.1 Block and sectionalising valve stations shall be installed as shown on the approved drawings. It is CONTRACTOR's responsibility to have the units completely assembled, tested and made fully functional including all related instruments etc.

12.2.2 The civil and structural work shall be carried our in accordance with the relevant specifications issued for the purpose and in accordance with the approved drawings as directed by COMPANY. This work as a minimum shall include clearing, grading, fencing, foundations, etc, as required. All above ground structures shall be painted as per the specification and color code given by the COMPANY.

12.2.3 A suitable concrete foundation as directed by COMPANY shall be constructed on which the valve shall be firmly installed, after embedding an insulating sheet of hard polyethylene with a thickness of atleast 5mm or equivalent. Such insulating sheet is also to be installed under pipe clamps, etc.

12.2.4 Valves with flow arrows shall be installed according to the normal flow in the pipeline. During, welding, the valves shall be in fully open position. In addition all manufacturer's instructions shall be followed.

Care shall be taken to avoid entry of sand particles etc. to valve body, seals etc. during transportation, storage, assembly and installation.

12.2.5 For valves and piping installed below ground and/or above ground, the anti-corrosion coating/painting shall be as per the requirements of the relevant specifications issued for the purpose. The anti-corrosion coating below ground shall extend upto 300mm above grade at the lowest point.

12.2.6 Sectionalizing valves shall be installed on sections of the pipeline in the horizontal position only or with an inclination not greater than that allowed by the valve manufacturer. Installation shall be done in such a way that there is no strain in the welded joint while the pipeline at upstream and downstream sides are straight.

12.2.7 All valves shall always be handled using equipment and methods to avoid impact, shaking and other stresses. In particular, the equipment and tools for lifting and handling shall never be done through handwheel, valve stem, joints and other parts which may suffer damage.

12.2.8 All sectionalizing valve and any other inline assemblies shall be prefabricated and tested hydrostatically ex-situ as per applicable specification. All such assemblies shall be installed at the locations shown in the drawings only after successful completion of the hydrostatic test and dewatering. Thereafter the ends of the assembly shall be closed off. CONTRACTOR shall carry out necessary excavation, cutting, bevelling and welding of the tie-ins required for the installation of such assembly. The tie-in joints shall be radiographically examined over 100% length and also 100% ultrasonically examined prior to backfilling. All works shall be executed in accordance with the relevant specifications issued for the purpose.

12.3 **Installation of Scraper Launchers and Receivers**

12.3.1 Scraper stations shall be fabricated and installed as per the approved drawings and whenever applicable as per the requirements of clause 12.2 of this specification. It is CONTRACTOR's responsibility to have the units completely assembled, tested and made fully functional including all instruments & related piping.

12.3.2 The civil and structural works for the scraper stations shall be carried out as per the relevant specifications, in accordance with the drawings and as directed by the COMPANY. The work as a minimum shall include site survey, site preparation, clearing, grading, fencing, foundations, etc. as required.

12.3.3 It shall be CONTRACTOR's responsibility to maintain elevations shown on the approved drawings and to carry out any pipework adjustments, necessary for this purpose. Field cuts shall be square and accurate and field welds shall not be performed under stress of pipe ends.

12.3.4 The painting for the scraper stations shall be carried out as per "Specifications for Painting". The underground sections shall be coated as specified for the pipeline upto atleast 300mm above grade.

12.3.5 The hydrostatic testing of the scraper stations shall be executed after installation in accordance with the relevant specification issued for the purpose.

12.4 **Installation of Insulation Joints**

12.4.1.1 Insulation joints shall be installed at the locations shown in the drawings. CONTRACTOR shall obtain approval from the COMPANY before installation of the insulation joints.

12.4.2 Handing and installation of the insulating joints shall be carried out with all precautions required to avoid damage and excessive stresses and that the original pup length is not reduced.

12.4.2 The insulating joints and the welded joints shall be protected by external coating as per relevant specifications issued for the purpose.

12.4.4 The in-line inserting shall be made on the buried pipeline; care shall be taken to operate at an external temperature as close as possible to the pipeline operating temperature.

The joints shall be inserted on straight sections and laid on a fine sand bed.

12.4.5 During the execution of the in-line connection welding, the propagation of heat shall be avoided. To achieve this, the joint shall be kept cold by means of nags continuously wetted.

12.4.6 Insulating joints shall be electrically tested before welding into the pipeline. The electrical conductance test shall be carried out using a Megger. Measurement of the insulation resistance across the joints shall be approx. one (1) Mega Ohm. The tests shall be repeated after installation and welding of the joint into the pipeline to verify that the assembly is undamaged.

13.0 WORKING SPREAD LIMITATIONS

CONTRACTOR shall, in general, observe the following maximum distances between the working mainline spread:

Between ROW grading, clearing and backfilling : 30 Kms

Between backfilling and final clean-up : 05 Kms

The above limitations do not apply to point spreads such as continuous rock blasting, river crossing, etc.

Any deviations from the above shall require prior approval of COMPANY. COMPANY reserves the right to stop the work, in case the approved spread limitations are exceeded and CONTRACTOR shall not be paid any compensation for stoppage of work.

14.0 CLEAN-UP AND RESTORATION OF RIGHT OF WAY

14.1 CONTRACTOR shall restore the ROW and all sites used for the construction of pipelines, water crossing and other structures in accordance with COMPANY's instructions, and deliver them to the satisfaction of COMPANY.

14.2 **Surplus Materials**

The following stipulations shall apply in case CONTRACT provides for supply of line pipe, bare and/or corrosion coated, by COMPANY.

All surplus and defective materials supplied by COMPANY shall be collected by CONTRACTOR and delivered to designated stockpile areas.

All Pipe-ends shorter than 1.0m shall be returned to COMPANY being scrap, all pipes longer than 8.0m shall be reconditioned (bevels, coating, provided with pipe letter,

number and length) and be returned to COMPANY's designated stockpile areas together with all undamaged, unused COMPANY supplied materials. All pieces between 1.0 and 8.0m shall be charged to the CONTRACTOR by COMPANY. CONTRACTOR shall record these returned materials in the Material account, to be prepared by him.

14.3 **Disposal**

14.3.1 All surplus and defective materials supplied by CONTRACTOR and all trash, refuse and spoiled materials shall be collected and disposed of by CONTRACTOR.

14.3.2 The ROW shall be cleared of all rubbish, broken skids, empty cans, card board, sacks, stamps, trash, and leftover construction material. All burnable matter shall be burned, but only after obtaining appropriate permits for such burning. If burning is not allowed, CONTRACTOR shall haul the clean-up material to approved dumping area. All scrap metal and unburnable material shall be disposed of, in an appropriate manner, but never be buried in the ROW.

14.3.3 Surplus soil can only be removed from the Owner's plot after authorisation by COMPANY.

14.3.4 All dumping fees connected with the disposal of materials shall be to the account of CONTRACTOR.

14.3.5 All loose stones and rock exposed by the construction operations and scattered over the ROW or adjacent grounds shall be removed by CONTRACTOR and be transported to a location considered suitable by the authorities having jurisdiction, for satisfactory disposal. For stones, gravel or other hard material which may be buried in the trench the provisions of the specifications shall apply with the understanding that the use of the land by the land-owner and/or tenant will not be interfered with.

14.4 **Temporary Structures**

All auxiliary structures such as bridges, culverts, sheet piling, posts, signs, etc., which were erected or installed by CONTRACTOR as temporary measure, shall be removed. However, it may be necessary to remove the fence of ROW during the maintenance period.

14.5 **Repair of Damage**

Damages to roads, bridges, private property shall be repaired by CONTRACTOR. All fences and other structures which are damaged during construction shall be restored to original condition.

Slopes, water course sides or banks which have been partially or totally demolished during the execution of the works shall be properly consolidated and restored without waiting for their natural consolidation and settling.

All boundary stones which have been moved or removed during the work must be reset in their original location to the satisfaction of the landowner concerned.

14.6 On completion of clean-up, the ROW shall be restored to such stable and usable condition as may be reasonably consistent with the condition of the ROW prior to laying the pipeline. The COMPANY shall be completely indemnified and held harmless by CONTRACTOR from any and against all claims, demands, losses, expenses etc. that may arise in this behalf or the COMPANY may anyway suffer or sustain, relative to, arising out of, or in connection with same. The COMPANY may require from the CONTRACTOR signed Releases from land owners regarding satisfactory indemnification and restoration of their lands.

14.7 Special precautions shall be taken near slopes prone to erosions and land slides. All necessary steps shall be taken to ensure the rapid growth of grass by providing wicker barriers and by regulating the drainage of surface waters.

14.8 All cadastral or geodetic markers which may have been removed during the execution of the works shall be restored in their exact position.

14.9 Ditches for which no instructions for restoration have been issued, or restoration cannot be done according to existing banks because of the absence of it, shall be restored as instructed by COMPANY. The bed of ditches crossed by the pipeline, shall be cleaned over the full width or the ROW, also outside the ROW if necessary. This restoration might involve the supply and installation proper materials for backfill and protection, sodding or other precautions to prevent erosion or guarantee the stability. Work has to be done after deliberation and acceptance of the authorities and COMPANY. Other field drains have to be restored by hand and/or special equipment to be used for that purpose as soon as possible and if necessary, also outside the ROW.

14.10 Any subsidence, cave-ins, wash-outs, which have been caused during the pipeline construction and maintenance, caused by whatever reason within the edge of ditches and open drains, shall be repaired by CONTRACTOR immediately or at first notice given by COMPANY.

14.11 After the clean-up, the ROW of pastures has to remain fenced and to be removed during the maintenance period. When agricultural and other traffic (requested by tenant) have to cross the ROW the cross-overs have to be fenced with the same material as the ROW. If necessary, special materials have to be used to allow traffic on the cross-over. Fencing of the right-of-way as specified shall not be removed until CONTRACTOR has obtained written permission by COMPANY. In general this has to be done during the maintenance period.

14.12 All openings in or damage to the fence or enclosures shall be repaired by installing new fencing of quality which shall be at least equal to the parts damaged or removed. Provisional gates shall be removed and replaced with new fencing. All repairs to fences and enclosures shall be carried out to the complete satisfaction of COMPANY, land owner and/or tenant.

14.13 If, in the opinion of COMPANY, the sod in pasture land has been damaged by vehicles and wheel tracks are visible, the ROW shall be tilled with a disc-harrow or rotary cultivator several times. The damaged sod shall be firmly cut up and thoroughly mixed through the top-soil. In general the ROW has also to be ripped. After this procedure no closed-in layers must be found and sufficiently loose top-soil 25 to 30cm thick must be present. The whole procedure has to be approved by COMPANY. Subsequently, the entire ROW which is part of pasture land, shall be prepared for seeding and fertilized according to the instructions of COMPANY.

14.14 In crop fields the tillage shall consist of passing over the land several times with a disc harrow, cultivating with a spading machine, or plow, to a depth of approx. 20 cm. In general the ROW has also to be ripped. After this cultivation process no closed-in layers must be found in the ROW. The equipment used and methods adopted shall require the approval of COMPANY. Ripping, has to be done with rippers with a distance of 50 cm between the ripper blades. The type to be used shall be approved by COMPANY.

14.15 A sapling of any plant/tree uprooted or cut during construction shall be planted along the route as per the direction of the COMPANY and in accordance with the Forest Preservation Act, 1981. The cost of sapling and its plantation shall be to CONTRACTOR's account.

14.16 The ROW and the backfilled trench in particular has to be finished in such a way that after settlement of the soil the fields are at their original level.

If during the maintenance period certain parts of the ROW are lower than the original level, COMPANY can order CONTRACTOR to bring these parts to the original level. If the level of the ROW for clean-up is ordered by COMPANY, risk of above mentioned additional restoration shall not be to CONTRACTOR's account.

In cases where heavy damage has occurred to the structure of the subsoil as a result of special circumstances, COMPANY reserves the right to order CONTRACTOR to carry out special work. Said special work can include:

- spading with dragline (depth 30 - 80 cm);
- spading with dragline (depth 80 - 100 cm);
- fertilizing;
- cover with sand.

If during clean-up operations, soil shortages become apparent outside the trench, CONTRACTOR shall supplement said soil shortage using suitable materials, approved by COMPANY.

If site and/or climatic conditions should render this necessary, COMPANY shall have the right to order CONTRACTOR to suspend certain parts of the WORK related to the clean-up and postpone it to a later date.

14.17 **Soil Surplus**

If on site, as a result of the work and after careful backfilling and compacting, a sub-soil surplus exists, this shall be worked up by grading and compacting below the sub-soil top layer and as a rule this shall be done in the same plot of land. It shall not be permitted to remove the surplus from the plot concerned, unless it concerns rejected soil which has to be removed. Working up surplus soil or removal of rejected soil shall be considered to pertain to the WORK.

To work a soil surplus into the ground CONTRACTOR shall remove an additional strip of top soil beside the trench. Next the upper layer of sub-soil shall also be removed. Both soil types shall be stored separately across a width depending on the size of the soil surplus. The soil surplus shall then be distributed across the trench thus widened, after which it shall be graded and compacted and subsequently the top layer of sub-soil and the top-soil shall be replaced in the correct order, in accordance with the Specifications.

In case COMPANY has given prior permission for mixed excavation of the sub-soil as well as in cases where COMPANY deems mixed excavation permissible, the above provision of separate storage of the upper layer of sub-soil shall not apply to the working up of the soil surplus.

In cases where the soil surplus can be worked up in other plots where soil shortages have arisen due to the WORK, this shall only be done after prior permission by land-owner, land-user and COMPANY.

14.18 **Soil Shortages**

If due to unforeseen circumstances during backfilling and compacting there isn't enough soil to fill the trench properly, or to install the crown height as stipulated, CONTRACTOR shall supply the necessary backfill material.

Soil shortages shall be supplemented and applied before the top-soil is replaced.

The soil to be supplied shall be worked up in those locations and into those layers where a soil shortage has been established. The quality of the supplemented soil shall be equal to that of the shortage.

15.0 MAINTENANCE DURING DEFECTS LIABILITY PERIOD

Defects liability Period (defined as period of liability in the CONTRACT) means the period of 12 months calculated from the date certified in the Completion Certificate.

COMPANY reserves the right to carry out instrumented pigging survey of the completed pipeline.

CONTRACTOR shall be responsible for making good with all possible speed at his expense any defect in or damage to any portion of the Work which may appear or

occur during the Defects liability Period and which arise either:

a) from any defective material (other than supplied by COMPANY), workmanship or design (other than a design made, furnished or specified by COMPANY and for which CONTRACTOR has disclaimed responsibility in writing), or

b) from any act or omission of CONTRACTOR done or omitted during the said period.

If such defect shall appear or damage occur, COMPANY shall forthwith inform CONTRACTOR thereof stating in writing the nature of the defect or damage.

If any such defect or damage be not remedied within a reasonable time, COMPANY may proceed to execute the work at CONTRACTOR's risk and expense, provided that he does so in a reasonable manner. Such defect or damage can be, but is not limited to:

- Clean up of ROW, including water courses
- Sagging or sinking of site level or pipe supports
- Sliding of ditch banks
- Repair of fencing or removal of construction fencing
- Repaving of pavements, repair of pavements, repair of coating, painting
- Realigning markers, signs
- Leak/burst of pipe, leaking flanges, washouts
- Short-circuit in casings
- Construction defects such as dents, ovality, welding offsets/defects, etc. detected during intelligent pigging survey.
- etc.

Company reserves the right to have the required Computerised Potential Logging Test executed during the DEFECTS LIABILITY PERIOD and whenever conditions are more favorable for this job. The work shall at or as soon as practicable after the expiration of the Defects Liability Period be delivered to COMPANY in the conditions required by the CONTRACT, fair wear and tear excepted, to the satisfaction of COMPANY. CONTRACTOR shall finish the work, if any outstanding, at the date of completion as soon as possible after such date and shall execute all such work.

Edition : 1

SPECIFICATION
FOR
WELDING OF ONSHORE GAS PIPELINES

SPECIFICATION NO.: MEC/S/05/21/02

(OIL & GAS SBU)
MECON LIMITED
DELHI 110 092

MECON LIMITED REGD. OFF: RANCHI 834002	STANDARD TECHNICAL SPECIFICATION OIL & GAS SBU, DELHI		
TITLE	WELDING OF ONSHORE GAS PIPELINES	DOCUMENT NO. MEC/S/05/21/02	Page 1 of 1 REVISION : 1 EDITION : 1

CONTENTS

SL.NO.	DESCRIPTION
01.0	SCOPE
02.0	APPLICABLE CODES, STANDARDS & SPECIFICATIONS
03.0	MATERIAL SPECIFICATIONS
04.0	WELDING CONSUMABLES
05.0	EQUIPMENT & ACCESSORIES
06.0	WELDING PROCESSES
07.0	BEVEL CLEANING AND BEVEL INSPECTION
08.0	ALIGNMENT AND SPACING
09.0	WEATHER CONDITIONS
10.0	WELDING
11.0	HEAT TREATMENT
12.0	INSPECTION AND TESTING
13.0	REPAIR OF WELDS
14.0	DESTRUCTIVE TESTING OF WELDED JOINT - BUTT WELDS
15.0	ULTRASONIC INSPECTION
16.0	AUTOMATED ULTRASONIC TESTING (AUT)
17.0	RADIOGRAPHY

ANNEXURE-I -	ELECTRODE QUALIFICATION TEST RECORD
ANNEXURE-II -	STRESS RELIEF HEAT TREATMENT PROCEDURE SPECIFICATION
ANNEXURE-III -	FORMAT FOR WELDING PROCEDURE SPECIFICATION (WPS)
ANNEXURE-IV -	FORMAT FOR PROCEDURE QUALIFICATION RECORD (PQR)
ANNEXURE-V -	FORMAT FOR MANUFACTURER'S RECORD FOR WELDER OR WELDING OPERATOR QUALIFICATION TESTS
ANNEXURE-VI -	RADIOGRAPHIC PROCEDURE QUALIFICATION RECORD FOR PIPE WELDING
ANNEXURE-VII -	WELDERS IDENTIFICATION CARD
ANNEXURE-VIII -	TYPE OF SOURCE AND FILMS TO BE USED FOR RADIOGRAPHY

PREPARED BY:	CHECKED BY:	APPROVED BY:	ISSUE DATE :
(Shalini Singh)	(Sunil Kumar)	(A.K. Johri)	Jan. 2009

MECON LIMITED REGD. OFF: RANCHI 834002	STANDARD TECHNICAL SPECIFICATION OIL & GAS SBU, DELHI		
TITLE	WELDING OF ONSHORE GAS PIPELINES	DOCUMENT NO. MEC/S/05/21/02	Page 1 of 1 REVISION : 1 EDITION : 1

AMENDMENT STATUS

Sl. No.	Clause / Paragraph / Annexure / Exhibit / Drawing Amended	Page No.	Rev.	Date	By		Verified	
					Name	Sig.	Name	Sig.
1.	General	-	1	06.06.11	Hitesh Manju		Sunil Kumar	

01. SCOPE

This specification stipulates requirements for fabrication of all types of welded joints of carbon steel main pipeline systems covering the pipeline and its facilities, which will include the following:

- All line pipe joints of the longitudinal and circumferential butt welded and socket welded types.
- Branch connections
- Joints in welded/ fabricated piping components.
- Attachments of castings, forgings, flanges and supports to pipes.
- Attachments of smaller connections for vents/ drain pipes and tappings for instrumentation.
- Welded manifold headers and other sub-assemblies.

Note: Any approval accorded to the Contractor shall not absolve him of his responsibilities and guarantees.

02. APPLICABLE CODES, STANDARDS & SPECIFICATIONS

All welding works, equipment for welding, heat treatment, other auxiliary functions and the welding personnel shall meet the requirements of the latest editions of the following codes, standards and specifications as listed below :-

- Code for Gas Transmission and Distribution Piping System (ANSI B31.8).
- Standard for welding of Pipelines and Related Facilities (API 1104).
- Specification for welding Electrodes and Filler Materials (ASME Sec. II C).
- Non Destructive examination (ASME Sec. V).
- Welding and Brazing Qualification, ASME Sec. IX.

03. MATERIAL SPECIFICATIONS

- In general carbon steel is used in this specification. The details of material specifications will be given in a welding Specification Chart attached alongwith other project data sheets.
- The CONTRACTOR will keep a record of test certificates of all the materials for the reference of the welding engineer.

04. WELDING CONSUMABLES

The CONTRACTOR shall provide at his own expenses all the welding consumbles necessary for the execution of the job such as electrodes, oxygen, acetylene etc. and the same shall be approved in advance by the Purchaser/ Consultant.

The welding electrodes/ filler wires supplied by the CONTRACTOR shall conform to the class specified in the welding specification chart. The materials shall be of the make approved by the COMPANY.

The electrode shall be suitable for the welding process recommended and base metal used. Physical properties of the welds produced by an electrode recommended for the welding of a particular base metal shall not be lower than the minimum values specified for the base metal unless otherwise specified in Welding Specification Chart and shall correspond to the physical properties of the class of electrode adopted. The choice of electrode shall be made after conducting the required tests on the electrodes as per relevant standards, and shall be the sole prerogative of the COMPANY.

The CONTRACTOR shall submit batch test certificates from the electrode manufacturers giving details of physical and chemical tests carried out by them for each batch of electrode to be used.

Electrode Qualification test records shall be submitted as per **Annexure-I** with respect to the electrodes tested by the CONTRACTOR and submitted for approval of the COMPANY, f or each batch of electrode.

All electrodes shall be purchased in sealed containers and stored properly to prevent deterioration. The electrodes removed from the containers (except cellulosic coated electrodes) shall be kept in holding ovens at the temperature recommended by the electrode manufacturer. Ovens shall be used for low hydrogen electrodes only. Out-of-the oven time of electrodes, before they are consumed, shall not exceed the limits recommended by the electrode manufacturer. The electrodes shall be handled with care to avoid any damage to the flux covering.

The electrodes used shall be free from rust, oil grease, earth and other foreign matter which affect the quality of welding.

Different grades of electrodes shall be stored separately. Cellulosic electrodes used shall however be used as per specific recommendations of manufacturer.

04.01 Shielding Gas

The composition and purity of shielding gas when required by the welding processes other than shielded metal arc welding, when permitted by the COMPANY, shall have prior approval of the COMPANY. Where appropriate, gases or gas mixture of the following quality shall be used.

a) argon complying with BS 4365

b) carbon dioxide complying with type 1 specified in BS 4105
c) gas mixture that have been proved to be satisfactory as a result of procedure approval tests.

When a gas mixture is used which has specified additions, e.g. 2% O_2, 5% CO_2 the variation of such addition shall not exceed ± 10% of that stated. Moisture content shall correspond to a dew point of - 30°C or lower.

05. EQUIPMENT & ACCESSORIES

5.1 The CONTRACTOR shall have sufficient number of welding and cutting equipment, auxiliaries and accessories of sufficient capacities to meet the target schedule.

5.2 All the equipment for performing the heat treatment including transformers, thermocouples, pyro-meters, automatic temperature recorders with suitable calibration arrangements, etc. shall be provided by the CONTRACTOR, at his own expenses and these shall bear the approval of the COMPANY. Adequate means of measuring current and voltage shall be available.

5.3 Redoing of any work necessitated by faulty equipment or operation used by the CONTRACTOR, will be done at his own expense.

06. WELDING PROCESSES

6.1 Welding of various materials under this specification shall be carried out using following process.

6.1.1 Main line (24" ϕ & above API 5L Gr. X-70, PSL-2)

Welding shall be carried out by automatic or semi automatic welding process.

6.1.2 Main line (24" ϕ & above API 5L Gr. X-80, PSL-2)

Welding shall be carried out by automatic welding process. When welding is carried out only from outside, copper backing shall be used at the root side.

6.2 Tie-Ins and Crossings

Shielded Metal Arc Welding and Semi-automatic Flux Cored Arc Welding shall be used for tie-ins and crossings.

6.3 Any deviation desired by the Contractor shall be obtained through the written consent of the Company.

Following agencies for Automatic Welding Systems are acceptable:

a) CRC-Evans Automatic Welding Systems, Houston
b) Pipe Welding Technology, Italy

c) RMS Welding Systems, Canada
d) Sermier Dasa, France

In case, the bidder proposes to employ any other agency, the proposed agency shall meet the qualification criteria mentioned in the following paragraph and shall submit necessary documentation meeting the criteria. The detailed system description and the procedure shall be submitted to the COMPANY for evaluation and approval

"Automatic welding systems and agencies who have proven track record of high productivity with satisfactory quality of weld and have done a single project of diameter 20" or above for a minimum length of 50 km and for a cumulative length of 500 km or above on large diameter Pipe lines in the last ten years shall only be accepted. CONTRACTOR shall engage only such automatic welding systems and agencies for the work to be covered by main line automatic welding. The track record shall be submitted to the COMPANY for approval prior to engagement".

6.4 The welding specification charts specifically developed for welding of the pipeline under this project shall be followed. The welding procedure adopted and the consumables used shall be specifically approved.

6.5 A combination of different welding processes or a combination of electrodes of different classes/ makes could be employed for a particular joint only after qualifying the welding procedures to be adopted and obtaining the approval of the COMPANY.

07. BEVEL CLEANING AND BEVEL INSPECTION

Line pipe supplied by COMPANY shall have bevel ends as specified in the applicable specification for Line Pipe attached with the Bid Package. Any modification thereto, if required by CONTRACTOR due to his special welding technique shall be carried out by the CONTRACTOR at his own cost.

Before welding, all rust and foreign matter shall be removed from the bevelled ends by power operated tools. This shall be effected inside and outside and for a minimum distance of 25mm from the edge of the weld bevel. The bevels shall be thoroughly inspected at this stage. If any of the ends of the pipe joints are damaged to the extent that, in the opinion of COMPANY, satisfactory weld spacing cannot be obtained and local repair by grinding cannot be successfully done, the damged ends shall be cut and re-bevelled to the satisfaction of the COMPANY, with an approved bevelling machine. Manual cutting and weld repairs of bevels is not allowed. Should laminations, split ends or inherent manufacturing defects in the pipe be discovered, the lengths of pipe containing such defects shall be removed from the line to the satisfaction of COMPANY. On pipes which have been cut back, a zone extending 25mm back from the new field bevel, shall be ultrasonically tested to the requirement of the line pipe specification to ensure freedom from laminations. The new bevel shall be subjected to 100% visual and 100% dye penetrant/ MPI tests. A report shall be written for all testing and records kept.

08. ALIGNMENT AND SPACING

Immediately prior to line-up CONTRACTOR shall inspect the pipe ends inside and outside for damage, dents, laminations etc. Pipe for welding shall be set up, correctly spaced, allowing for temperature changes during welding, in correct alignment and shall in no circumstances be sprung into position. Temporary attachments of any kind shall not be welded to the pipe. Welds joining the sections of the pipelines, valve installation or similar welds classified as tie-in welds shall be made in the trench. Otherwise the alignment and welding shall be made alongside the ditch with the pipe supported on skids and back pad or other suitable means approved by COMPANY, at least 500mm above the ground, unless approved by the COMPANY in specific cases.

Seam orientation of welded pipe shall be selected to ensure that at the circumferential welds, the longitudinal welds shall be staggered in the top 90° of the pipeline, or 250mm whichever is the lesser. A longitudinal joint shall pass an appurtenance of a structural element at a minimum distance of 50mm. Should a section of the line containing uncompleted welds fall from the skids, the CONTRACTOR shall immediately inform COMPANY.

Every effort shall be made to reduce misalignment by the use of the clamp and rotation of the pipes to obtain the best fit. For pipe of same nominal wall thickness off-set shall not exceed 1.6mm. The off set may be checked from outside using dial gauges. Any branch connection, sleeve, etc. shall be atleast 150mm from any other weld. The welds for fittings shall be so located that the toe of the weld shall not come within 50 mm of any other weld. Cold dressing is permissible only in cases of slight misalignment and may only be carried out with a bronze headed hammer. Hot dressing shall not be permitted. When welding pipes of different wall thickness (as directed by COMPANY) a special transition piece shall be used. This shall have a minimum of 1:4 taper. The welds shall be subject to both ultrasonic and radiographic inspection.

The root gap shall be accurately checked and shall conform to the qualified welding procedure. The use of internal line-up clamps is mandatory for pipe diameters 10" and above. However, in some cases (tie-in welds, flanges, fittings, diameter of pipe 10" etc.) where it is impossible to use internal clamps, an external line-up clamp may be used.

The internal line-up clamp shall not be released before the entire root pass has been completed.

When as external line-up clamp is used, all spaces between bars or atleast 60% of the first pass shall be welded before the clamp is released and the pipe remaining adequately supported on each side of the joint.

Segments thus welded shall be equally spaced around the circumference of the pipe. Slag, etc. shall be cleaned off and the ends of the segments shall be prepared by grinding, so as to ensure continuity of the weld bead.

09.0 WEATHER CONDITIONS

The parts being welded and the welding personnel shall be adequately protected from rain and strong winds. In the absence of such a protection no welding shall be carried out. The completed welds shall be suitably protected in case of bad weather conditions.

10.0 WELDING

10.1 Root Pass

a) Root pass shall be made with electrodes/ filler wires recommended in the welding specification chart attached along with other project data sheets. The size of the electrodes used shall be as per the approved welding procedure.

b) Position or roll welding (for yard double jointing) may be permitted. Separate procedures shall be submitted and qualified for up hill, down hill, vertical down and roll welding. The vertical up method of welding shall be used for the root pass of the tie-ins, special crossings, fittings and special parts, filled welds, repairs and when an external line up clamp is used. The down hill welding may be used for root run welding of tie-ins and special crossings when (a) the edges are machined or have equivalent preparation (b) line up clamps are used and the fit up is geometrically and mechanically similar to one of the oridinary line welding without misalignment or uneveness.

c) The root pass of butt joints shall be executed properly so as to achieve full penetration with complete fusion of the root edges. Weld projection inside the pipe shall not exceed 1.6 mm wherever not specified by the applicable code.

d) Any deviation desired from the recommended welding technique and electrodes indicated in the welding specification chart shall be adopted only after obtaining express approval of the COMPANY.

e) Welding shall be continuous and uninterrupted during a pass.

f) On completion of each run, craters, welding irreigularities, slag, etc., shall be removed by grinding and chiselling.

g) While the welding is in progress care shall be taken to avoid any kind of movement of the components, shocks, vibration and stresses to prevent occurance of weld cracks.

h) Fillet welds shall be made by shielded metal arc welding process irrespective of the thickness and class of piping. Electrode size shall not exceed 3.25mm diameter for socket joints. Atleast two passes shall be made on socket weld joints

i) Root pass of fillet weld for branch connection can also be made by GTAW process. However other pass shall be made by SMAW process as mentioned above (point h).

j) Peening shall not be used.

10.2 **Joint Completion**

The first pass shall be carried out by a minimum of two welders, working simultaneously and so placed as to cause minimum distortion of the pipe.

The number of welders and the allowable welding sequences shall be as those laid down in the qualified welding procedure specification. Once the deposit of the first pass has been started, it must be completed as rapidly as possible, reducing interruptions to the minimum. The welding and wire speed shall be approximately same as that established in the Qualified Welding Procedure Specification (QWPS).

The pipe shall always be adequately supported and must not be pumped or shaken during welding. The clamp shall be removed, as indicated in clause 8.0 above. Before starting the second pass, the first pass shall be cleaned and flattened with rotating grinders.

The interruption between completion of the first pass and starting the second pass shall be as stated in the procedure specification.

For crack prevention a top and bottom reinforcement of at least one electrode shall be applied before lowering the pipe on the skid.

The welding speed selected shall enable production of a bead which is sufficiently thick and which shows no undercutting.

The time lapse between second and third pass shall be as stated in the procedure specification, normally not exceeding five minutes. After completion of the third or following passes, welding operations may be suspended, so allowing the joint to cool down, provided that the thickness of the weld metal deposited is equal to at least 50% of the pipe thickness. Upon restarting, depending on the materials, wall thickness and welding process, a preheating to atleast 100°C shall be carried out. Subsequent passes up to weld completion shall be protected to avoid rapid cooling, if meteorological conditions so dictate. Cleaning between passes shall be done carefully so as to reduce the possibility of inclusions.

Electrodes starting and finishing points shall be staggered from pass to pass. Arc-strikes outside the bevel on the pipe surface are not permitted. Arc - strike or arc-burn on the pipe surface outside the weld, which are caused accidentally by electrical arcs between the electrodes, electrode holder, welding cable shall be removed by grinding in accordance with a procedure approved by COMPANY and the repair checked by ultrasonic, radiographic, magnetic particle or dyepenetrant tests which the COMPANY feels necessary. The pipe wall thickness after grinding shall not be less that the minimum thickness limit permitted for the pipe. Repair of arc-strikes by welding is prohibited.

The completed weld shall be carefully brushed and cleaned and shall appear free from spatters, scales, etc.

These requirements apply not only to completed welds but also to the bare strip at least so wide so as to allow full skid examination at both ends of the pipe to allow a good ultrasonic inspection when it is required.

11.0 HEAT TREATMENT

11.1 Preheating

Preheating, if required, shall be carried out as per the following :

a) Preheating requirements for the various materials shall be as per the welding specification chart.

b) Preheating shall be performed using resistance or induction/ heating methods. Preheating by LPG flame with ring burner may be used with the permission of the COMPANY under careful supervision.

c) Preheating shall extend uniformly to atleast three times the thickness of the joint, but not less than 50mm, on both sides of the weld.

d) Preheating temperature shall be maintained over the whole length of the joint during welding. Temperature indicating crayons or other temperature indicating devices shall be provided by the CONTRACTOR to check the temperature.

11.2 Postweld Heat Treatment

a) Post weld heat treatment, wherever required for joints between pipes and fittings, pipe body and supports shall be carried out by the CONTRACTOR at his expense as per the relevant specifications, applicable standards and the instructions of the COMPANY.

b) The heat treatment of welded joints shall be carried out as per the requirements laid down in ANSI B31.8 and other special requirements mentioned in welding specification chart.

c) The CONTRACTOR shall submit for the approval of the COMPANY, well before carrying out actual heat treatments the details of the post weld heat treatment procedure, as per **Annexure-II** attached, that he proposes to adopt for each of the materials/ assembly/ part involved.

d) Post weld heat treatment shall be done in a furnace or by using an electric resistance or induction heating equipment, as decided by the COMPANY.

e) While carrying out local post weld heat treatment, technique of application of heat must ensure uniform temperature attainment at all points of the portion being heat treated. Care shall be taken to ensure that width of heated band over which specified post weld heat treatment temperature is attained is atleat as that specified in the relevant applicable standards/ codes.

The width of the heated band centered on the weld shall at least be equal to the width of weld plus 2" (50mm). The temperature gradient shall be such that the length of the material on each side of the weld, at a temperature exceeding half the heat treatment temperature, is atleast 2.5 rt where is the bore radius and t is the pipe thickness at the weld.

f) Throughout the cycle of heat treatment, the portion outside the heat band shall be suitably wrapped with insulation so as to avoid any harmful temperature gradient on the exposed surface of pipe. For this purpose temperature at the exposed surface of the pipe shall not be allowed to exceed 400°C.

g) The temperature attained by the portion under heat treatment shall be recorded by means of thermocouple pyrometers. Adequate number of thermocouples shall be attached to the pipe directly at equally spaced locations along the periphery of the pipe joint. The minimum number of thermocouples attached per joint shall be 2 upto 10" dia and 3 for 12" dia and above. However, the COMPANY can increase the required minimum number of thermocouples to be attached, if found necessary.

h) Automatic temperature recorders which have been suitably calibrated shall be employed. The calibration chart of each recorder shall be submitted to the COMPANY prior to starting the heat treatment operation and its approval shall be obtained.

i) Immediately on completion of the heat treatment, the post weld heat treatment charts/ records alongwith the hardness test results on the weld joints (whenever required as per the welding specification chart) shall be submitted to COMPANY for its approval.

j) Each joint shall bear an identification number which shall be maintained in the piping sketch to be prepared by the CONTRACTOR. The joint identification number shall appear on the corresponding post weld heat treatment treatment charts. The same identification numbers shall also be followed for identification on corresponding radiographic films. The chart containing the identification number and piping sketch shall be submitted to the COMPANY in suitable folders.

k) Vickers hardness/ Brinnel hardness of the heat affected zone as well as of the weld metal, after heat treatment shall be measured using a suitable hardness tester and shall not exceed the maximum hardness specified in the welding specification chart. The weld joint shall be subjected to reheat treatment, when

hardness measured exceeds the specified limit, at the CONTRACTOR's own expense.

l) The CONTRACTOR shall arrange for the hardness testing and shall maintain the records of all the joints tested. These records shall be checked by the COMPANY.

12.0 INSPECTION AND TESTING

12.1 General

a) The COMPANY's Inspector shall have free access to all concerned areas, where the actual work is being performed. The CONTRACTOR shall be also provide the COMPANY's inspector all means and facilities necessary to carry out inspection.

b) The COMPANY is entitled to depute its own inspector to the shop or field where pre-fabrication and erection of pipelines are being done, with (but not limited to) the following objectives :-

i. To check the conformance to relevant standards/ specifications and suitability of various welding equipment and the welding performance.

ii. To supervise the welding procedures qualification.

iii. To supervise the welder's performance qualification.

iv. To carry out visual/NDT examination of the weldings.

v. To check whether shop/ field welding is being executed is in conformity with the relevant specification and codes of practice followed in pipe construction.

c) CONTRACTOR shall intimate sufficiently in advance the commencement of qualification tests, welding works and acceptance tests, to enable the Company's inspector to be present to supervise the same.

12.2 Welding Procedure Qualification

a) Welding procedure qualification shall be carried out in accordance with the relevant requirements of API 1104 latest edition or other applicable codes and other special requirements of the specification / job requirements by the CONTRACTOR at his expense. The CONTRACTOR shall submit the welding procedure specification chart format as per **Annexure-III** (attached) immediately after the receipt of the order.

b) COMPANY's inspector will review, check and approve the welding procedure submitted and shall release the procedure for procedure qualification tests. The procedure qualification test shall be carried out by the CONTRACTOR under field conditions at his own expense. A complete set of test results in format as per **Annexure-III & Annexure-IV** (attached) shall be submitted to the

COMPANY's Inspector for approval immediately after completing the procedure qualification test and atleast 2 weeks before the commencement of actual work. Standard tests as specified in the code shall be carried out in all cases. In addition to these, tests, other tests like radiography, macro/ micro examination, hardness tests, dye penetrant examination, charphy V-notch etc. shall be carried out on specimens. It shall be the responsibility of the CONTRACTOR to carry out all the tests required to the satisfaction of the COMPANY's Inspector. The destructive testing of welded joints shall be as per Clause 14.0.

12.3 **Welder's Qualification**

a) Welders shall be qualifed in accordance with the API 1104 and other applicable specifications by the CONTRACTOR at his expense. The butt weld test pieces of the qualification test shall meet the radiographic test requirements specified in Clause 12.5 and 16.0 of this specification. The COMPANY's Inspector shall witness the test and certify the qualification of each welder separately. Only those welders who have been approved by the COMPANY's Inspector shall be employed for welding. CONTRACTOR shall submit the welder qualification test reports in the standard format as shown in **Annexure-V** and obtain express approval, before commencement of the work. It shall be the responsibility of CONTRACTOR to carry out qualification tests of welders and obtain written approval, before commencement of works.

b) The welders shall always have in their possession the identification card as shown in **Annexure-VII** and shall produce it on demand by the COMPANY's Inspector. It shall be the responsibility of the CONTRACTOR to issue the identity cards after it has been duly certified by the COMPANY.

c) No welder shall be permitted to work without the possession of identity cards.

d) If a welder is found to perform a type of welding or in a position for which he is not qualified, he shall be debarred from doing any further work. All welds performed by an unqualfiied welder shall be cut and redone by a qualified welder at the expense of the CONTRACTOR.

12.4 **Visual Inspection**

Inspection of all welds shall be carried out by COMPANY as per the latest editions of the applicable codes and specifications. All finished welds shall be visually inspected for parallel and axial alignment of the work, excessive reinforcement, concavity of welds, shrinkage, cracks, under-cuts, dimensions of the weld, surface porosity and other surface defects. Undercutting adjacent to the completed weld shall not exceed the limits specified in the applicable standard/ code.

12.5 **Non Destructive Examination**

12.5.1 The non destructive examination of one hundred percent (100%) girth welds will be required by the COMPANY.

The non-destructive examination shall mainly consist of examination using Automated

Ultrasonic Testing (AUT) as detailed in clause no. 16.0. This shall be applicable for all welds made by automatic GMAW process with narrow gap edge preparation and welds made by semi-automatic FCAW process.

The CONTRACTOR shall make all the arrangements for the AUT of work covered by the specification at his expense. The CONTRACTOR shall furnish all the reports to the COMPANY, immediately after examination together with the corresponding interpretation reports on the approved format. The details of the AUT reports along with the joint identification number shall be duly entered in a register and signed by the CONTRACTOR and submitted to the COMPANY for approval. The COMPANY will review all the AUT records of welds and inform the CONTRACTOR to those welds, which are unacceptable. The decision of the COMPANY shall be final and binding in this regard.

For 150# Rating Pipeline, welds shall meet the standards of acceptability as set forth in API 1104. However for higher class rating pipeline welds shall meet the standards of acceptability as set forth in API 1104 and as well as the requirements laid in subsequent paragraphs.

The CONTRACTOR shall make all the arrangements for the NDT work covered by the specification at his expense.

All requirements mentioned in the specification shall be arranged and executed by the CONTRACTOR through his own resources. In addition, Radiography examination shall be required in the following cases as per clause no. 17.0 of this specification :

a) On the first 100 welded joints corresponding to each automatic GMAW welding procedure used.

b) When welds are repaired.

c) When in the opinion of COMPANY, radiography inspection is required to confirm or clarify defects indicated by Ultrasonic examination.

d) Welding of Transition piece of pipe.

In addition, Radiography inspection may be required for certain critical welds of the pipeline, i.e. tie-ins, welding of valves, flanges, randomly selected at COMPANY discretion. All fillet and groove welds, other than those AUT examined, shall be subjected to Dye-Penetrant /MP testing followed by manual Ultrasonic testing.

The non-destructive testing system used for inspecting welds must be approved by the COMPANY.

All other welds and Tie-in joints having API bevel shall be examined by Radiography. When Radiography is used, the provisions stated in this para shall be applicable.

- For all production welds, X-ray Radiography by internal crawlers be used.

Welds shall meet the standards of acceptability as set forth in API 1104 and as well as the requirements laid in subsequent paragraphs.

The CONTRACTOR shall make all the arrangements for the Radiography examination of work covered by the specification at his expense.

The COMPANY will review all the radiographs of welds and inform the CONTRACTOR regarding unacceptable welds. The decision of the COMPANY shall be final and binding in this regard.

All the requirements mentioned in the specification shall be arranged and executed by the CONTRACTOR through his own resources. In addition, Ultrasonic inspection is required in the following cases as per clause no. 15.0 of this specification:

a) On the first 10 welded joints corresponding to each automatic GMAW welding procedures used.
b) When welds are repaired.
c) When in the opinion of COMPANY, Ultrasonic inspection is required to confirm or clarify defects indicated by Radiography.

In addition, Ultrasonic inspection may be required for certain critical welds of the pipeline, i.e. tie-ins, welding of valves, flanges, randomly selected at COMPANY discretion. All fillet and groove welds, other than those are subjected to Radiography, shall be subjected to Dye-Penetrant/MP inspection. The non-destructive testing system used for inspecting welds must by approved by the COMPANY.

Acceptance Criteria

Weld quality is judged on the basis of the acceptability criteria mentioned below:

Any weld which as a result of radiographic and/ or ultrasonic examination in the opinion of COMPANY exhibits imperfections greater than the limits stated in API-1104 latest edition or as superseded in this specification shall be considered defective and shall so be marked with an identification point marker.

In addition to the API-1104 requirements, the welds containing cracks including crater cracks regardless of size of location are unacceptable.

1. Any length of inadequate penetration of the root bead as defined by API-1104 is not acceptable except that root concavity is allowed as per API 1104.
2. Any amount of incomplete fusion at the root of the joint as detailed in API 1104 is considered unacceptable.
3. Unrepaired burn through areas are unacceptable.

Suitable records shall be maintained by the CONTRACTOR as desired by the COMPANY on the day to day work done on welding, radiography, ultrasonic testing. The CONTRACTOR shall present the records to the COMPANY on day to day basis and whenever demanded, for approval.

12.6 **Destructive Testing**

The COMPANY has the authority to order the cutting of upto 0.1% of the total number of welds completed for destructive testing at no extra cost of COMPANY. The destructive testing of weld joints shall be made as per Clause 14.0.

In addition, welds already cut out for defects for any reason may also be subjected to destructive testing. The sampling and the re-execution of welds shall be carried out by the CONTRACTOR at his own expense. If the results are unsatisfactory, welding operations shall be suspended and may not be restarted until the causes have been identified and the CONTRACTOR has adopted measures which guarantee acceptable results. If it is necessary in the COMPANY's opinion the procedure shall be re-qualified. The weld joint represented by unsatisfactory welds shall stand rejected unless investigation prove otherwise.

13.0 REPAIR OF WELDS

13.1 With the prior permission of COMPANY, welds which do not comply with the standards of acceptability shall be repaired or the joint cut out and re-welded.

A separate welding procedure specification sheet shall be formulated and qualified by CONTRACTOR for repair welds simulating the proposed repair to be carried out. Separate procedures are required to be qualified for (a) thorough thickness repair (b) external repair and (c) internal repair. Welders shall be qualified in advance for repairs. The root pass, for repairs opening the root, shall be done by the vertical uphill technique. The procedure shall be proven by satisfactory procedure tests to API 1104 including the special requirement of the specification, and shall also be subject to metalographic examination, hardness surveys and Charpy tests to determine the effects of repair welding on the associated structure.

Root sealing or single pass repair deposit shall not be allowed. Internal root defects shall be ground thoroughly and welded with a minimum of two passes. However, while grinding for repairs, care shall be taken to ensure that no grinding marks are made on the pipe surface anywhere.

The repair shall be subjected, as a minimum requirement to the same testing and inspection requirements as the original weld. The re-radiography of repaired weld shall be limited to 6" weld length on either edge of the repaired area. A 100% ultrasonic test shall be done at the repaired area externally. Any repaired area that is wide, irregular or rough shall be rejected and a full cut out shall be done. Single pass repairs shall be subjected to 100%, Dye-Penetrant / MP testing.

Repairs are limited to a maximum of 30% of the weld length. Not more than two repairs are permitted on the same location. All repairs shall be carried out the day after initial Radiography or earlier. A report of all repairs shall be maintained by CONTRACTOR and submitted every day to the Company / Consultant.

13.2 **Weld Rejected by Accumulation of Defects**

Where a weld is rejected by the accumulation of defect clause, as defined by API 1104 and this specification, repairs within these limitations are permitted. Defects in the filling and capping passes shall be repaired preferentially.

14. DESTRUCTIVE TESTING OF WELDED JOINT - BUTT WELDS

14.1 Preparation

Having passed the visual and the non-destructive-inspection the test weld shall be subject to mechanical test.

After satisfactory completion of all visual and non-destructive testing the test weld shall be set aside for a period not less than 24hours. No further work on the test weld and no cutting of test specimens from the weld shall be performed until a period of at least 24 hours has expired. Having passed the visual and the nondestructive inspection, the test weld shall be subjected to mechanical test.

Weld specimens shall be taken from the positions indicated in Fig. 1 of this specification from areas as free from defects as possible; for this reason it is necessary to take the previous non-destructive tests into account. The minimum number of tests to be carried out is given in Table-1 of this specification.

The tests shall be carried out in laboratories approved by the COMPANY. The specimens shall be prepared in accordance with the figures given in the paragraphs which refer to the individual tests.

14.2 Tensile Strength

Specimens shall be taken from the position indicated in Fig. 1 & 1A of this specification. Two ISO type specimens and two API - type specimens shall be taken.

The ISO test specimen are shown in Fig. 2 of this specification.

14.2.1 Method

The test shall be carried out in accordance with ISO:375.

Table-1

Type and Number of Test Specimens for Procedure Qualification Test & Production Welds

Pipe Size, Out Side Diamter-	Number of Specimens									
	Tensile	Tensile	Nick	Root	Face	Side	Macro	Hard-	Impact	Total

Inches	API	ISO	Break	Bend	Bend	Bend	Bend	ness		
Wall Thickness - ½ inch (12.7mm) and Under										
Under 2-3/8	0	0	2	2	0	0	0	0	0	4
2-3/8 to 4-½ incl.	0	0	2	2	0	0	0	0	0	4
Over 4-½ less than 12.75	2	0	2	2	2	0	2	2	12	24
12- 3/4 and over	2	2	4	4	4	0	2	2	24	44
Wall Thickness - Over ½ inch (12.7mm)										
4-½ and smaller	0	2	0	0	0	2	0	0	0	4
Over 4-½ less than 12-3/4	2	0	2	2	2	0	2	2	12	24
12-3/4 and over	2	2	4	0	0	8	2	2	24	44

14.3 **Nick-Break Test**

14.3.1 **Preparation**

Specimens for Nick-break test with notches thus worked can break in the base metal, instead of in the fusion zone; therefore an alternative test piece may be used after authorisation by the COMPANY with a notch cut in the reinforcement of outside weld bead to a maximum depth of 1.5mm measured from the surface of the weld bead.

14.4 **Macroscopic Inspection**

14.4.1 **Preparation**

Specimens shall be taken from the positions indicated in Fig. 1 of this specification and shall be prepared in accordance with ASTM E2 and E3.

The width of the macrosection has to be at least three times the width of the weld. The section is to be prepared by grinding and polishing and etched to clearly reveal the weld metal and heat affected zone.

14.4.2 **Method**

Specimens shall be carefully examined under the microscope, with a magnification of atleast 25 times (25:1). The COMPANY may ask for a macrograph with 5 times (5:1) magnification for DOCUMENTATION purposes.

14.4.3 **Requirements**

Under macroscopic examination, the welded joints shall show good penetration and fusion, without any defect exceeding the limits stated in the evaluation criteria of the nick break test.

14.5 **Hardness Test**

14.5.1 **Preparation**

The prepared macrosection is to be used for hardness testing using the Vickers method with 10 kg load Indentations are to be made along traverses each approximately 1mm below the surface on both sides of the weld.
In the weld metal a minimum of 6 indentations equally spaced along the traverses are to be made. The HAZ indentations are to be made along the traverses for approximately 0.5mm each into unaffected materials, and starting as close to the fusion line as possible.

One indentation on each side of the weld along each traverse is to be made on parent metal. Refer Fig.3. The indentations are to be made in the adjacent regions as well on the opposite sides of the macrosection along the specified traverses.

14.5.2 **Method**

The test shall be carried out in accordance with Recommendation ISO R81, Vickers hardness, using a laboratory type machine controlled as pre-recommendation ISO R146 and using a diamond pyramid penetrator set at 2.37 rad (136°) with a load of 10 kg.

14.5.3 **Requirements**

Hardness value shall not exceed the limit specified in welding Specification chart. In case of a single reading having a slightly (+10 HV) higher value than the specified limit, further indentations shall be made to check if the high value was an isolated case.

All the hardness values contained from the heat affected zone shall not exceed 100 HV with respect to the average hardness of the values obtained for the base metal. If these additional tests give a hardness within the specification limit the slightly higher value may be accepted.

14.6 **Charpy - V - Notch Impact Test**

14.6.1 Specimens shall be taken from the position indicated in Fig. 1 of this specification. The test specimens will be prepared in accordance with ISO R148. Charpy V-notch specimens shall have dimensions as given in Fig. 3 of this specification.

Three test specimens shall be taken from each sample and they shall be cut and worked so that their length is transverse and perpendicular to the weld bead with the notch

position as shown in Fig. 4 of this specification. The notch shall be perpendicular to the roller surface. The test specimen width shall depend upon the pipe wall nominal thickness as following :

Sl. No.	Nominal Wall Thickness in mm	Test Specimen width mm
1.	Over 12	10
2.	Over 9.5 and upto 12	7.5
3.	From 7 upto 9.5	5
4.	Less than 7	2.5

14.6.2 **Test Method**

The test shall be carried out as indicated in ISO R148 "Beam impact test V-notch".

Test pieces shall be immersed in a thermostatic bath and maintained at the test temperature for at least 15 minutes. They shall then be placed in the testing machine and broken within 5 seconds of their removal from the bath. The test temperature shall be as mentioned in Special conditions of the Contract.

14.6.3 **Requirements (Note-1)**

The impact energy shall be as follows :

Sl. No.	Test Specimen in mm	"Average of three Specimens (Note-2) Joules (Min.)	Minimum Single Value (Note-1) Joules
1.	10.0	27.0	22.0
2.	7.5	21.5	17.0
3.	5.0	18.5	15.0
4.	2.5	10.0	8.0

Note :

1) Only one value is permitted to be lower than average value upto the value specified.
2) These values are specified for resistance to brittle fracture only, where additional requirements are specified in project data sheet. (Ex. pipeline materials with arrest properties i.e. a higher upper shelf charpy V-energy for resistance against propagating ductile fractures) the same shall be followed.

14.7 **Bend Test Requirements**

The Bend test Specimens shall be made and tested as per the requirements of API 1104 Sixteenth Edition May 1983 except that the dimensions of the Jig for guided bend test

Fig. 5 para 2.6 API 1104 shall be modified as follows:

Radius of the Plunger `A'	:	2 t
Radius of the die `B'	:	3 t + 1.6mm
Width of the die `C'	:	50.8mm

The acceptance criterion on shall however be as per para 2.643 and 2.653 of API 1104 nineteenth edition Sept. 1999.

Note : t = thickness of specimen

15. ULTRASONIC INSPECTION

In addition to the radiographic inspection, ultrasonic inspection is required as per conditions listed in paragraph 12.5 of this specification. This section concerns manual ultrasonic inspection. However ultrasonic by automatic equipment may be used if approved by the COMPANY.

15.1 Equipment and Operators

The CONTRACTOR who carries out the ultrasonic inspection shall have sufficient qualified personnel equipment and instruments at his disposal to be able to effect the tests without hindering or delaying the pipeline assembly operations.

The operators shall be fully qualified as per a recognised standard (ASME Sec. V or equivalent) and they shall have as minimum level II as described in para 11.4.3, API 1104; nineteenth edition. The operators shall be able to :

- calibrate the equipment ;
- perform an operational test under production conditions;
- interpret the screen picture ;
- evaluate the size and location of reflectors
- interpret the type of defects detected

The COMPANY has the option of checking the ability of personnel employed for ultrasonic testing by means of qualification tests.

The CONTRACTOR appointed to carry out ultrasonic inspection shall supply all the instruments necessary for their execution on site.

15.2 Specification for Ultrasonic Inspection Procedure Qualification

Before work begins, the CONTRACTOR shall present a specification describing the proposed U.T. procedure qualification.

This specification shall state, as an indication only but not limited to the following

information :

- type of U.T. equipment used
- type and dimensions of transducers
- frequency range
- details for calibration
- coupling medium
- inspection technique
- record details
- reference to the welding procedure where it is intended to adopt the specification.
- temperature range of the joints to be inspected.

15.3 **Qualification of Ultrasonic Inspection Procedure**

The ultrasonic inspection procedure shall be approved by the COMPANY. Before inspection begins, the COMPANY may require the qualification test of the ultrasonic inspection procedure. This specification test consists in testing (under normal operating conditions) some CONTRACTOR welds made according to the same production procedure, where there are typical defects the test intends to detect.

This test shall be conducted in the presence of the COMPANY. The Ultrasonic inspection procedure shall be approved by the Company.

15.4 **Test Procedure**

Circumferential welds shall be inspected from both sides using angled probes.

The surface with which the probes comes into contact shall be free of metal spatter, dirt, iron oxide, and scales of any type; therefore it shall be necessary to clean a strip at least 50mmwide on both sides of the weld with steel wire brushes and anyhow the cleaned strip must be atleast wide enough to allow full skip examination.

If, during the test, echoes of doubtful origin appear, it shall be necessary to inspect a convenient area on the pipe surface, close to the weld, with a straight beam transducer in order to check whether any manufacturing defects are present which could have interfered with the ultrasonic beam.

By way of an example, the equipment shall include but not be limited to the following:-

- ultrasonic equipment and coupling medium
- sample sections for calibration of instruments
- equipment for cleaning of surface to be examined
- rules calibrated in centimeters for exact location of the position of defects.

The characteristics of the above - listed instruments and equipment shall guarantee:

a) that the required standards of the inspection procedure, as previously

established and approved by the COMPANY, are satisfied.

b) continuous operation

All the instruments and equipment shall be approved by the COMPANY before being used. The COMPANY has the authority to reject any item which is considered unsuitable. The decision of the COMPANY is final. The CONTRACTOR appointed to carry out ultrasonic inspections shall also ensure the operational efficiency and maintenance of the instruments and equipment, and shall immediately substitute any item rejected by the COMPANY.

All the instruments and equipment necessary for carrying out ultrasonic inspection on site shall satisfy the requirements laid down by the public boards of institutions which regulate `safety at work'.

15.5 Ultrasonic Instruments

The Ultrasonic Instruments shall satisfy the following:

- be pulse-echo type, able to generate, receive and display, on the screen a cathode ray tube (CRT) pulse at frequencies between 1 and 6 MHz. The useful part of the CRT screen shall be at least 70mm wide and at least 50mm high.
- shall have variable amplification, with steps of 1 or 2 dB over a range of a least 60 dB.
- the regulation control shall be accurate to within ±1 db and this accuracy shall be certified by the instrument manufacturer.
- may be powered by a battery or an electric generator. In the first case, the autonomy of operation (endurance) of the instrument shall be sufficient to carry on working without frequent interruptions, and the instruments shall be equipped with an automatic switch which switches it off when the battery runs down; in the second case, there must be a voltage stabilising device with a tolerance of ±2 Volts.

15.6 Probes

The probes used shall have dimensions, frequencies, and a refraction angle suited to the type of steel, the diameter, the thickness of the pipe and to the joint design.

15.7 Reference Sample Pieces

The efficiency of the equipment used, the effective refraction angle of the probe, and the beam output point, shall be checked using a V_1 and V_2 sample block, IIW type or calibration block ASTM E-428.

For manual Ultrasonic testing and automated Ultrasonic testing, the reference sample pieces shall be as described in API 1104, Nineteenth Edition, para 11.4.5.

15.8 **Calibration**

The calibration, qualification of the testing procedure shall be done as provided in API 1104.

15.9 **Regulation of Amplification During Production Testing**

Scanning sensitivity shall be as provided in API 1104 para 11.4.7.2 &11.4.7.3.

15.10 **Qualification of Ultrasonic Testing Operators**

Before the inspection begins or during the same inspection, the COMPANY may require a qualification test for the ultrasonic equipment operators.

15.11 **Evaluation of Indications Given by Ultrasonic Tests**

Each time that echoes from the weld bead appear during production testing, the instrument amplification shall be altered to coincide with the reference amplification and the probe shall be oved until maximum response is obtained, paying attention all the time of the probe-tube coupling.

If, under these conditions, the heights of the defect echo is equal to or greater than that of the reference echo, the defect shall be evaluated according to other clauses of this Specification. If the defect has also been detected by the radiographic and or visual examination, the dimensions shall be judged according to the type of examination which detects the greater defect. Returns which are less that 50% of the reference echo, will not be considered. If returns are above 50% but lower than 100% of the reference echo, and if the operator has good reasons to suspect that the returns are caused by unfavourably oriented cracks, the same shall be informed to the COMPANY. Moreover, when there is a defect to be repaired, such defect shall be removed for a length corresponding to the one where no more return echo is given.

15.12 **Other Equipment**

The use of rules calibrated in centimeters, attached if possible to the probe, for the precise location of the position of welding defects, is recommended. Defect location is effected by measuring the projection distance between the probe output and the reflecting surface.

The operators carrying out the tests shall have besides the probing instrument, tools for cleaning the pipe surface (files, brushes, etc.), as well as, the coupling liquid or paste appropriate for the temperature of the section to be examined.

16.0 AUTOMATED ULTRASONIC TESTING (AUT)

- **INTRODUCTION**

The specification shall be applicable for Automated Ultrasonic Testing (AUT) system suitable for pipeline girth welds. The system shall be based on focused pulse-echo, tandem or through transmission methods enhanced with mapping image and augmented by Time Of Flight Diffraction (TOFD) technique.

- **REFERENCE DOCUMENTS**

ASTM E 1961-98 "Standard Practice for Mechanized Ultrasonic examination of Girth Welds using Zonal Discrimination with Focused Search Units". The inspection system shall meet and exceed the requirements of ASTM E 1961-98.

Appendix-E, "Automated Ultrasonic Girth Weld Testing", OS-F101, Submarine Pipeline Systems, January 2000.

API Std. 1104 – "Welding of Pipeline and Related Facilities".

- **APPROVED AGENCIES**

Following agencies for Automatic Ultrasonic Testing (AUT) are acceptable:

a) RTD Quality Services, Rotterdam, Netherlands
b) SHAW Pipeline Services, Canada
c) WELDSONIX, USA
d) UT Quality, Canada
e) SCI, Spain
f) SIEVERT India Private Ltd., India

In case bidder proposes to employ any other agency, the proposed agency shall meet the qualification criteria listed below and shall submit necessary documentation. The detailed system description and procedure shall be submitted for COMPANY evaluation/ approval.

Automatic Ultrasonic Testing (AUT) systems and agencies who have proven track record and have done a single project of diameter 20" or above and minimum length of 50 km and also have inspected a cumulative length of 500 km or above on large diameter Pipe lines in the last ten years shall only be accepted. The agency should have been approved by the reputed inspection agencies. The track record shall be submitted to the COMPANY for approval prior to engagement.

- **AUT SYSTEM**

The system shall meet and exceed the requirements of ASTM E1961-98.

The system shall provide an adequate number of examination channels to ensure the complete volumetric examination of the weld through the thickness in one circumferential scan. The evaluation zones should be of maximum 2.0mm height. The instrument linearity should be such that the accuracy is within 5%.

Each examination channel should be selective for pulse-echo or through transmission mode gate position and length for a minimum of two gates and gain.

TOFD techniques & B-scan mapping should be available to improve characterization. Recording thresholds should be selectable to display signals between 0 and 100% of full screen height for simple amplitude and transit time recording and it should be from 0 to 100% for B-scan or mapping type recording of data. Two recordable signals output per gate should be available being either analog or digital and representative of signal height and time of flight. Measuring distance accuracy of circumferential weld shall be within 1.0 cm from zero (0) position.

Electronic noise shall be lower than acoustical noise in all channels for the probes and sensitivities to be used during inspection. The signal to noise ratio for each channel during examination shall be at least ≥ 20 dB for shear waved probes.

- **COUPLING**

The coupling shall be obtained by using a medium suitable for the purpose. It shall be suitable for the temperature used. No residue shall remain on the pipe surface. A method should be employed to determine that constant coupling is achieved during examination. An examination of the test piece with its surface wiped dry should produce a record showing an absence of the couplant recording signal.

- **SEARCH UNITS**

The search unit shall meet all the requirements specified in Para 6.4 of ASTM E1961¬-98.

- **CALIBRATIONS**

Reference standards shall be manufactured from a section of unflawed project specific line pipe supplied by pipeline CONTRACTOR. The agency shall then submit the reference standard design to the COMPANY before manufacturing. No design changes in the reference standard shall be made without the prior approval. Annexure A3 of the standard ASTM E1961-98 provides an example for minimum requirements for reference standards.

The system shall be optimized and calibrated as stated in Para 7.0 and 8.0 of ASTM E 1961-98. Static and Dynamic calibration shall be done and the approved procedure shall clearly state the gain setting fixed for each channel.

The reference standard should be used to verify the scanning sensitivity at the start of each shift and thereafter at intervals not exceeding two (2) hours or ten (10) welds.

A re-calibration shall be carried out if :

a) The calibration of an inspection function differs more than +/- 3dB from the previous calibration
b) The gate settings need to be adjusted with more than +/- 1.5 mm with the previous calibration
c) After a weld repair
d) After equipment breakdown.

In case the calibration differs from the initial setting, outside the given tolerances, the applicable probe(s) and coupling shall be checked. If the calibration has to be changed, the welds before this calibration upto the previous calibration will be re-examined.

The reference standard design for calibration shall be approved separately. The procedure for calibration and verification shall be same as given above.

- **PROCEDURE**

A detailed AUT procedure shall be prepared and qualified for each wall thickness and joint geometry to be examined prior to the start of any NDT work. Repair procedure shall be separately qualified for each joint geometry. All the requirements of ASTM E1961-98 should be met. The procedure as a minimum shall include the following:

- Functional description of equipment
- Reference standards and guidelines controlling equipment maintenance
- Instructions for scanning device, Ultrasonic instrument, Ultrasonic electronics, Hard & Software for recording processing, Display presentation and storage of inspection data
- Transducer configuration(s), characteristics types coverage.
- Number of examination zones for each wall thickness to be examined.
- Gate settings
- Equipment settings -Description of calibration blocks including type, size and location of calibration reflectors, a) calibration intervals, b) calibration records - Static and dynamic calibration procedure
- Identification of inspection starting point scanning direction and indication of length inspected

- Method for scanner alignment and maintenance of alignment
- Allowed temperature range
- Couplant coupling and coupling control and channels provided to indicate lack of coupling and method to ensure constant coupling
- Transducer and over all functional checks
- Height and length sizing methodology
- Surface condition and preparation
- Description of inspection work
- Acceptance criteria and instructions for reporting including example of recorder chart and form to be used.
- A table indicating corresponding channel no., probe, type, location of reflector, probe coupling etc.

▪ **Setting of Inspection Gates**

Pulse-echo and Tandem Channels

With each transducer positioned for the peak signal response from the calibration reflector the detection gates are to be set. The gate shall start 2-6mm (allowance for width of heat affected zone) before the theoretical weld bevel preparation. The gate ends shall be after the theoretical weld centerline. All gates will be programmed to record amplitude and/or transit distance information. The length of the transit distance in the root channel will be extended to enable root penetration registration.

Mapping Channels

The mapping gates in the body of the weld shall start 2-6mm (allowance for width of heat affected zone) before the theoretical weld bevel preparation. The gate length will be extended to enable cap reinforcement registration. The mapping gates in the root will be set identical to the pulse-echo transit distance channels to enable the registration of the root penetration.

TOFD Channel

The TOFD gate start will be set 1 µSec before the arrival of the lateral wave and should extend up to the first back wall echo to achieve full cover of wall thickness.

Note: The gate settings may be altered if geometry indications dictate.

Sensitivity Settings

With each transducer positioned for the peak signal response from the calibration

reflector (flat bottom holes), the detection gates are to be set. In this position, the probe holder is fixed to the probe frame. The equipment sensitivity (echo amplitude) for all inspection channels shall be set at 80% Full Screen Height (FSH).

Mapping channels in the body of the weld will be used to detect the presence of porosity and in addition to identify the position of the weld cap reinforcement for pattern recognition purpose. The sensitivity as a minimum is equal to the related pulse- echo channels, increased with additional gain to ensure proper detection.

Mapping channels in the root will be used to identify the position of the root penetration for pattern recognition purpose. The sensitivity as a minimum shall be equal to the related pulse-echo channels, increased with additional gain to ensure proper detection.

The lateral wave of the TOFD channel sensitivity is set at 80% FSH.

- **TRAINING AND QUALIFICATION**

1. All Inspectors' of the COMPANY (Owner) shall be imparted training at the CONTRACTOR's cost. The inspector shall be provided complete awareness and knowledge regarding the equipment, limitations, capabilities complete range, method of operation, calibration, scanning, including development of suitable procedure, training on variables effecting the system performance and interpretation of results.

2. The Ultrasonic lead operator performing the examination shall be qualified in accordance with the COMPANY's written practice and in accordance with ASNT Practice SNT-TC-1A and EN 473 Level II. He should have experience in multichannel UT equipment and be trained in using mechanized UT manipulators.

- **FIELD EXAMINATIONS AND REPORTING**

All the requirements stated in Para 9 and 10 of ASTM E1961-98 shall be followed a minimum.

- **INTERPRETATION OF RESULTS**

General

With the transit distance measurements and with the information from the mapping and TOFD channels visible on the result presentation, indications shall be judged whether they are from the weld geometry or from the defects. The coupling channels will check for coupling loss; in case of coupling loss, a re-scan shall be carried out.

Inspection Result

The inspection result should be evaluated and/or reported as follows:

Welds shall be evaluated using both the pulse-echo and TOFD criteria shown below.

This shall be performed in parallel and rejection against either of these criteria shall be cause for rejection of the weld. The exceptions to this are described in the following notes:

1. All indications in the pulse echo channels should be evaluated which exceed the threshold level of 20% FSH.
2. Defect length shall be measured for the pulse-echo channels from the point where the signal exceeds 20% FSH to the point the signal falls below. The largest height assessed with TOFD or the greatest measured amplitude with pulse-echo shall be assumed to apply over the whole defect length.
3. If the indication cannot be resolved by TOFD i.e. the upper and lower flaw diffraction tips cannot be separately distinguished, no measurement can be made to determine the defect height. In this case, the signal from the pulse-echo channels will be solely used to determine that particular area of the scan.
4. Defects shall be assessed for interaction as follows:

   a) Horizontal interaction

   If the distance between two adjacent defects is less than the length of the smaller of the two defects, then the defect shall be treated as a single defect.

   b) Vertical interaction

   Vertical interaction of defects shall be assessed using TOFD. If the distance between the two adjacent defects is less then the height of the shorter of the two defects, than the defect shall be treated as a single defect. Where the individual defects cannot be resolved by TOFD for the vertical interaction, then the defects are assumed to interact and shall be treated as a single defect.

5. The maximum allowable accumulated defect length shall be as per the criteria given in welding specification.

- **ACCEPTANCE CRITERIA**

Weld quality shall be judged on the basis of the acceptability criteria mentioned in welding specification.

17.0 RADIOGRAPHY

17.1 Scope

This covers the radiographic inspection of all types of welded joints of the main pipeline.

The welded joints shall include the following :-

i. Full girth welds on the mainline construction including double jointing of pipe, if adopted.

ii. Welds for installation of block valves, insulating joints and other appurtenances and tie-ins.

iii. Welds at scraper launching and receiving barrels.

iv. Terminal Piping

17.2 Applicable Standards

This specification shall apply in conjunction with the following (all latest edition):

i. API 1104, Standard for welding Piplines and Related Facilities.

ii. ANSI B31.8, Code for Gas Transmission and Distribution Piping Systems.

iii. ANSI B31.4, Code for Liquid Petroleum Transportation Piping Systems.

iv. ASTM E94, Recommended practice for Radiographic Testing.

v. ASTM E142, Standard Method for Controlling Quality of Radiographic Testing.

vi. The American Society for Non-destructive Testing. Recommended Practice No. SNT - TC-1A Supplement A.

17.3 Procedure

17.3.1 The radiographic examination procedure to be adopted shall be submitted by the CONTRACTOR as per Annexure VI.

17.3.2 The procedure of radiographic examination shall be qualified to the entire satisfaction of COMPANY prior to use. It shall include but not be limited to the following requirements :

i. Lead foil intensifying screens, at the rear of the film shall be used for all exposures.

ii. Type 2 and 3 films as per ASTM E-94 shall be used.

iii. A densitometer shall be used to determine film density. The transmitted film density shall be 2.0 and 3.5 throughout the weld. The unexposed base density of the film shall not exceed 0.30.

iv. Radiographic identification system and documentation for radiographic interpretation reports and their recording system.

17.3.3 The CONTRACTOR shall qualify each procedure in the presence of the COMPANY prior to use.

17.3.4 The procedure of radiographic examination shall produce radiographs of sufficient density, clarity and contrast so that defects in the weld or in the pile adjacent to the weld, and the outline and holes of the penetrameter are clearly discernible.

17.3.5 All the girth welds of mainline shall be subjected to 100% radiographic examination. The CONTRACTOR shall furnish all the radiographs to the COMPANY, immediately after processing them, together with the corresponding interpretation reports on approved format. The details of the radiographs all alongwith the joint identification number shall be duly entered in a register and signed by the CONTRACTOR and submitted to the COMPANY for approval.

17.3.6 When the radiation source and the film are both on the outside of the weld and located diametrically opposite each other, the maximum acceptable length of film for each exposure shall not exceed the values given in Table-4 of API 1104. The minimum film overlap, in such cases, shall be 40mm. The ellipse exposure technique may be used on nominal pipe sizes of 2 inch and smaller provided that the source of film distance used is a minimum of 12 inch.

17.3.7 Three copies of each acceptable radiographic procedure (as per Annexure-VI) and three copies of radiographic qualification records, shall be supplied to COMPANY. One set of the qualifying radiographs on the job shall be kept by the CONTRACTOR's authorised representative to be used as a standard for the quality of production radiographs during the job. The other two sets shall be retained by COMPANY for its permanent record.

17.3.8 Three copies of the exposure charts relating to material thickness, kilo voltage, source of film distance and exposure time shall also be made available to COMPANY by the CONTRACTOR.

17.3.9 The CONTRACTOR shall, on a daily basis, record for each radiograph (1) radiograph's number, (2) welder's number (3) approximate chainage of weld location, (4) whether or not the welds meet the specified acceptance standards and (5) the nature and approximate location of unacceptable defects observed. It must be possible to relate back to a particular butt weld and welder on piping drawing and pipe line alignment drawing.

17.3.10 Each day's production of processed radiographs shall be properly packaged separately, identified

by at least the (1) date, (2) radiographic unit, (3) job locations, (4) starting and ending progress survey stations and (5) shall include original and three copies of the daily radiographic record. The package shall be submitted to the COMPANY daily when possible, but in no event later than noon of the following day.

17.3.11 The CONTRACTOR shall provide all the necessary facilities at site, such as a dark room with controlled temperature, film viewer etc. to enable the COMPANY to examine the radiographs.

17.3.12 The CONTRACTOR, if found necessary, may modify the procedure of radiographic examination suiting to the local conditions prevailing. This shall, however, be subject to the approval of the COMPANY.

17.3.13 COMPANY shall have free access to all the CONTRACTOR's work facilities in the field.

17.3.14 Any approval granted by the COMPANY shall not relieve the CONTRACTOR of his responsibilities and guarantees.

17.4 **Radiation Source**

17.4.1 Radiographic examination shall be carried out using x-radiations, Radiographic examination by Gamma rays may be allowed, at the discretion of the COMPANY, in case of inaccessible joints. Radiography by Gamma-Ray for tie-in-joints shall be acceptable provided D4 AGFA film or equivalent is used and the required sensitivity obtained.

17.4.2 Whenever possible, pipeline welds will be inspected by placing the radiation source inside the pipe, on the pipeline axis, with a radiation of 6.28 rad. (360°C).

If it is impossible to place the radiation source inside the pipe, the weld will be inspected with the source on the outside. An overlap of at least 40mm at the ends of each film shall be required to ensure that the first and last location increment numbers are common to successive films and to establish that no part of a weld has been omitted.

17.5 **Level of Quality**

The quality level of Radiographic sensitivity required for radiographic inspection shall be at least equivalent to the values in Fig. 6

17.6 **Penetrameters**

The image quality indicator (abbreviation : IQI) shall be used for the qualification of the welding procedure and during normal line production. Radiographic sensitivity shall be measured with the wire image quality indicator (Penetrameter). The penetrameter shall be selected according to DIN54109 or ISO1027. For radiographs made with the source on the outside, a penetrameter shall be placed on each side of the film with the smaller wiere of the penetrameter turned towards the end of the film itself. When a complete weld is radiographed in a single exposure using a source inside the piping, four

penetrameter approximately equally spaced around the circumference shall be used. During the procedure qualification, IQI shall be placed both on the source side and on the film side. The sensitivity obtained with IQI on the source side shall not be less than the values shown in Fig. 6 of this specification.

The sensitivity limit may be considered to have been reached when the outline of the IQI, its identification number and the wire of the required diameter show up clearly on the radiograph.

The COMPANY may authorise use of types of IQI other than those planned, provided that they conform with recognised standards and only if the CONTRACTOR is able to demostrate that the minimum sensitivity level required is obtained. For this demostration, a test shall be carried out comparing the IQI specified and the CONTRACTOR's, to show up the identification number and other details of the proposed IQI, which must be visible in the test radiograph.

17.7 **Film Identification Markers**

All films shall be clearly identified by lead numbers, letters, and/or markers. The image of the markers shall appear on the films, without interfering with the interpretation. These markers positions shall also be marked on the part to be radiographed and shall be maintained during radiography.

17.8 **Protection and care of film**

17.8.1 All unexposed films shall be protected and stored properly as per the requirements of API 1104 standard and ASTM E.94.

17.8.2 The exposed and unexposed film shall be protected from heat, light, dust and moisture. Sufficient shielding shall be supplied to prevent exposure of film to damaging radiation prior to and following the use of the film for radiographic exposure.

17.9 **Re-radiography**

17.9.1 The weld joints shall be re-radiographed in case of unsatisfactory quality of the radiographs, at the expense of the CONTRACTOR.

17.9.2 All the repaired weld joints shall be re-radiographed at no extra cost to the COMPANY in the same manner as that followed for the original welds. In addition, the repaired weld areas shall be identified with the original identification number plus the letter R to indicate the repair.

17.9.3 When evaluating repair film, radiographers shall compare each section (exposure) of the weld with the original film to assure repair was correctly marked and original defect removed.

17.9.4 The COMPANY will review prior to any repair of welds, all the radiographs of welds which contain, according to the CONTRACTOR's interpretation, unacceptable defects. The final disposition of all unacceptable welds shall be decided by the COMPANY.

17.10 **Qualification of Radiographers**

17.10.1 Pipeline radiographers shall be qualified in accordance with the requirement of API 1104 and to the full satisfaction of COMPANY.

17.10.2 Certification of all the radiographers, qualified as per 16.10.1 above, shall be furnished by the CONTRACTOR to the COMPANY before a radiographer will be permitted to perform production radiography. The certificate record shall include :

i. Background and Experience Record
ii. Training Course Record
iii. Technical Examination Record
iv. Doctor's report on radiographer's Oaecuer 0-1 acquity eye test.
v. Date of qualification

17.10.3 The radiographers shall be required to qualify with each radiographic procedure they use, prior to performing the work assigned to him in accordance with the specification.

17.11 **Preservation of Radiographs**

17.11.1 The radiographs shall be processed to allow storage of films without any discoloration for at least three years. All the radiographs shall be presented in suitable folders for preservation alongwith necessary documentation.

17.11.2 All radiographs shall become property of the COMPANY.

17.12 **Equipment and Accessories**

17.12.1 CONTRACTOR shall make necessary arrangement at his own expense, for providing the radiographic equipment, radiographic film and all the accessories for carrying out the radiographic examination for satisfactory and timely completion of the job.

17.12.2 For carrying out the mainline radiographic examination the CONTRACTOR shall be equipped with suitable mobile/ stationary type dark rooms.

These shall have all the required facilities for film processing. Film viewer used shall be equipped with the film illuminator that has a light source of sufficient intensity and suitably controlled to allow viewing film densities upto 4.0 without damaging the film.

17.13 **Radiation Protection**

17.13.1 CONTRACTOR shall be responsible for the protection and personnel monitoring of personnel with or near radiation sources.

17.13.2 The protection and monitoring shall comply with local regulations.

17.13.3 In view of visual hazards in the handling of Radioactive source of material, CONTRACTOR shall be solely responsible for complying with all rules and regulations set forth by Atomic Energy Commission or any other Government agency of India in this regard and COMPANY shall not be responsible and shall be kept indemnified by the CONTRACTOR for default (s) of whatever nature by the CONTRACTOR. Safety equipment as considered adequate by the COMPANY for all necessary personnel shall be made available for use and maintained for immediate and proper use by the CONTRACTOR.

17.14 **Display of Safety Instructions**

17.14.1 The safety provisions shall be brought to the notice of all concerned by display on a notice board at a prominent place at the work spot. The person responsible for the "safety" shall be named by the CONTRACTOR.

17.15 **Enforcement of Safety Regulations**

17.15.1 To ensure effective enforcement of the rules and regulations relating to safety precautions, the arrangement made by CONTRACTOR shall be open to inspection by COMPANY or its representatives.

17.16 **First Aid and Industrial Injuries**

17.16.1 CONTRACTOR shall maintain first aid facilities for its employees and sub-contractors.

17.16.2 CONTRACTOR shall make outside arrangements for ambulance service and for treatment of industrial injuries. Names of those providing these services shall be furnished to COMPANY prior to start of work and their telephone no. shall be posted prominently in CONTRACTOR's field office.

17.16.3 All critical industrial injuries shall be reported promptly to the COMPANY and a copy of CONTRACTOR's report covering each personal injury requiring the attention of physician shall be furnished to the COMPANY.

17.17 **No Exemption**

17.17.1 Notwithstanding the above there is nothing in these to exempt the CONTRACTOR from the operation of any other act or rules in force.

ANNEXURE-I

ELECTRODE QUALIFICATION TEST RECORD

A. **Tested at (Site name)** Date :

Manufacturer's Name :

Brand Name :

Batch Number & Size Tested :

Classification & Code :

Intended for Welding in Position :

In combination with (if any) :

Code of Reference (used for testing) :

Special requirements (if any) :

B. **All Weld Tensile Test**

Base Material used :

Pre-heat temp. :

Postweld Heat Treatment Details :

Visual Examination :

Radiographic Examination Results :

Tensile Test Results :

Sl.No.	Identification No.	U.T.S.	Yield Point	Elongation
1.				
2.				

ANNEXURE-I
Sheet 2 of 3

C. **Impact Test Results**

Test Temperature : Notch in :

Type of Specimens (Charpy) : Size of Specimens :

Sl.No.	Specimen No.	Impact Valve	Average
1.			
2.			
3.			
4.			
5.			
6.			

d

D. **Chemical Analysis Result**

Electrode Size used :

Batch No. :

%C	%S	%P	%SI	%Mn	%Cr	%Ni	%Mo	Other

E. **Fillet Weld Test Results**

Welding Positions :

Base Materials :

Size of Electrode used :

Visual Inspection Results : 1)
2)
3)

Macro Test results :

ANNEXURE-I

Fracture Test Results :

Remarks :

F. **Other Test Results**

1. Transverse Tensile Test :

In combination with :

Base Material used :

Position of Welding :

Preheat Temperature :

Post Weld Heat Treatment :

Radiography :

Identification No.	U.T.S.	Fracture in	Remarks

2. **Guided Bend Test**

Position	ID No.	Root, Face or Side Bend	Remarks
	1.		
	2.		
	3.		
	4.		
	5.		

Any other Tests :

Conclusion :

ANNEXURE-II
Sheet 1 of 2

STRESS RELIEF HEAT TREATMENT PROCEDURE SPECIFICATION

Name of the Heat-Treater :

Name of the Project : Specification Reference No.:

1. **General Details**

   Name of the Equipment :

   Name of the Assembly/ Part :

   Assembly/ Part Drawing No. :

   Material :

2. **Furnace Details**

   Type of Heating : Gas/ Oil/ Elec. Res./ Induction Type of Heating (Tick mark)

   Capacity (Size) :

   Maximum Temp.(°C) :

   Method of Temp. Measurement :

   Atmosphere Control :

3. **Heat Treatment Cycle Details**

   Changing Temp. °C :

   Rate of Heating, °C/ Hr. :

ANNEXURE-II
Sheet 2 of 2

Soaking Temp. °C :

Soaking Time, Hrs. :

Rate of Cooling, °C/ Hr. :

Mode of Cooling :

4. Other Details, if any.

Notes :
The following documents shall be furnished alongwith the specifications :
i. Material Test Certificates
ii. Assembly/ Part Drawing.

ANNEXURE-III

Sheet 1 of 3

FORMAT FOR WELDING PROCEDURE SPECIFICATION (WPS)

Company Name _____ By _____

Welding Procedure Specification No. _____ Date _____ Supporting PQR No. (S) _____ Revision No. _____ Date _____

Welding Process (es) _____ Type (s) _____

(Automatic, Manual, Machines or Semi Auto)

JOINTS

Joint Design _____

Backing (Yes) _____(No) _____

Backing Material (Type) _____

Sketches Production Drawings. Weld Symbols Written

Description should show the general arrangement of the parts to be welded. Where applicable, the root specing and the details of weld groove may be specified.

(At the option of the Manufacturer sketches may be attached to illustrate joint design weld layers and bead sequence e.g. for notch toughness procedures, for multiple process procedures, etc.)

BASE METALS

P.No. _____ Group No. _____ to P. No. _____ Group No. _____

OR

Specification type and grade _____

to Specification type and grade _____

OR

Chern. Analysis and Mech. Prop. _____

to Chern. Analysis and Mech. Prop. _____

Thickness Range :

Base Metal: Groove _____ Fillet _____

Deposited Weld Metal: Groove _____ Fillet _____

Pipe Dia Range : Groove : _____ Fillet _____

Other _____

ANNEXURE-III
Sheet 2 of 3

FILLER METALS

F.No. _____ Other _____
A.No. _____ Other _____
Spec. No. (SFA) _____
A WS No. (Class) _____
Size of filler metals _____
_____
(Electrodes, Cold Wire, Hot Wire etc.)
Electrode-Flux (Class) _____
Flux Trade Name _____
Consumable Inset _____
Each base metal/filler metal combination should be recorded individually.

WPS NO. _____ Rev. _____

POSITIONS :	**POSTWELD ED HEAT TREATMENT**
Position (s) of Groove _____ Welding Progression: UP _____ Down ____ Position (s) of Fillet _____	Temperature Range _____ Time Range _____
PREHEAT Preheat Temp. Min. _____ Interpass Temp. Max. _____ Preheat Maintenance _____	**GAS** Shielding Gas (es) _____ Percent Composition (mixtures) _____ _____ Flow Rate _____ Gas Backing _____ Trailing Shielding Gas Composition _____

ELECTRICAL CHARACTERISTICS

Current AC or DC_____ Polarity _____
Amps (Range) _____ Volts (Range) _____
(Amps and volts range should be recorded for each electrode size, position, and thickness, etc. This information may be listed in a tabular form similar to that shown below).
Tungsten Electrode Size and Type _____
(Pure Tungsten, 2% Ceriated, etc)

Mode of Metal Transfer for GMAW _____
(Spray arc, short circuiting arc, etc.)

ANNEXURE-III

Electrode Wire feed speed range _____

_____

TECHNIQUE

String or Weave Bead _____

Orifice or Gas Cup Size_____

Initial and Interpass Cleaning (Brushing, Grinding, etc.) _____

_____

Method of Back Gouging _____

Oscillation _____

Contact Tube to Work Distance _____

Multiple or Single Pass (per side) _____

Multiple or Single Electrodes _____

Travel Speed (Range) _____

Peening _____

Other _____

_____

Weld Layer(s)	Process	Filler Metal		Current		Volt Range	Travel Speed Range	Others
		Class	Dia	Type Polarity	Amp. Range			
								e.g. Remarks, comments, Hot wire Addition, Technique Torch Angle, etc.

ANNEXURE-IV

Sheet 1 of 3

FORMAT FOR PROCEDURE QUALIFICATION RECORD (PQR)
RECORD ACTUAL CONDITIONS USED TO WELD TEST COUPON

Company Name _____

Procedure Qualification Record No. _____ Date _____

WPS No. _____

Welding Process (es) _____

Types (Manual, Automatic, Semi-Auto) _____

JOINTS

Groove Design of Test Coupon

(For combination qualification the deposited weld metal thickness shall be recorded for each Filler metal or process weld)

BASE METALS	**POSTWELD HEAT TREATMENT**
Material Sepc. _____ Type of Grade _____ P.No. _____ to P.No. _____ Thickness of Test Coupon _____ Diameter of Test Coupon _____ Other _____ _____	Temperature _____ Time _____ Other _____ _____ _____ _____
FILLER METALS	**GAS**
Weld Metal Analysis A No. _____ Size of Filler Metal _____ Filler Metal E.No. _____ SF A Specification _____ A WS Classification _____ Other _____ _____	Type of Gas on Gases _____ Composition of Gas Mixture _____ Other _____ _____ _____ _____
POSITION	**ELECTRICAL CHARACTERISTICS**
Position of Groove _____ Weld Progression (Uphill, Downhill) _____ Other _____ _____	Current _____ Polarity _____ Amps. _____ Tungsten Electrode Size _____ Other _____

ANNEXURE-IV

Sheet 2 of 3

PREHEAT	**TECHNIQUE**

Phreheat Temp. _____ Interpass Temp. _____	Travel Speed _____ String or Weave Bead _____ Oscillation _____ Multipass or Single Pass (per side) _____ Single or Multiple Electrodes _____ Other _____

GUIDED BEND TESTS

Type of Figure No.	Result

TOUGHNESS TESTS

Specimen No.	Notch Location	Notch Type	Test Temp.	Impact Value	Lateral Exp.		Drop Weight	
					% Shear	Mils	Break	No Break

FILLET WELD TEST

Result - Satisfactory: Yes _____ No _____ Penetration into Parent Metal: Yes _____ No. _____

Marco – Results _____

OTHER TESTS

Type of Test

_____

Deposit Analysis

_____

Other

_____

_____

_

Welder's Name _____ Clock No. _____ Stamp No. _____

ANNEXURE-IV

Test Conducted by _____ Laboratory Test No. _____

We certified that the statements in this record are correct and test welds were prepared, welded and tested in accordance with the requirements of Section IX of the ASME Code.

Date : _____ Manufacturer : _____

By : _____

(Detail of record of tests are illustrative only and may be moulded to conform to the type and number of tests required by codes and specifications).

ANNEXURE-V

FORMAT FOR MANUFACTURER'S RECORD FOR WELDER OR WELDING OPERATOR QUALIFICATION TESTS

Welder Name _____ Check No. _____ Stamp. No. _____

_____

Using WPS No. _____ Rev. _____

The above welder is qualified for the following ranges

Variable	Record Actual Values Used in Qualification	Qualification Range
Process	_____	_____
Process Type	_____	_____
Backing (metal, Weld metal, flux, etc)	_____	_____
Material Spec.	_____ to _____	_____ to _____
Thickness		
Groove	_____	_____
Filler	_____	_____
Diameter		
Groove	_____	_____
Filler	_____	_____
Filler Metal		
Spec. No.	_____	_____
Class	_____	_____
F. No.	_____	_____
Position	_____	_____
Weld Progression	_____	_____
Gas Type	_____	_____
Electrical Characteristics		
Current	_____	_____
Polarity	_____	_____

ANNEXURE-V

Guided Bend Test Results

Type and Fig. No.	Result

Radiographic Test Results
For alternative qualification of groove welds by radiography

Radiographic Results _____

Fillet Weld Test Results

Fracture Test (Describe the location, nature and size of any crack of tearing of the specimen _____
Length and Per Cent of Defects _____ inches _____%
Macro Test – Fusion _____
Appearance - Fillet Size (ing) _____x_____ Convexity or Concavity _____

Test Conducted by _____ Laboratory - Test No. _____

We certify that the statements in this record are correct and that the test welds were prepared. Welded and tested in accordance with the requirements of Section IX of the ASME Code.

Date _____ Organization _____
By _____

(Details of record tests are illustrative only and may be modified to conformation to the type & number of tests required by the Code).

Note: Any essential variables in addition to those above shall be recorded.

ANNEXURE-VI

Sheet 1 of 1

RADIOGRAPHIC PROCEDURE QUALIFICATION RECORD FOR PIPE WELDING

1. Location
2. Date of Testing
3. Name of the Contractor / Agency
4. Material : Carbon steel / Alloy Steel / Stainless Steel

4.A Technique: DWSI / SWSI / DWDI

5. Diameter & Thickness:
6. Type of Weld Joint:
7. Radiation Source:
8. Intensifying Screens/Lead Screens:
9. Geometric Relationship:
10. Limit of Film Coverage:
11. Film Type and Make:
12. Exposure Time:
13. Processing:
14. Density:
15. Sensitivity:

16.* Type of penetrameter:
(Source side)

17.* Type of penetrameter:
(Film side)

Signature of Contractor / Agency with Seal

Approval of MECON's Inspector

* Ref. Para regarding recommended practice on placement of penetrameters Article 22, SE 142, ASME Sec. V.

* For "Random Radiography" lines placement of penetrameters as per Article 2, ASME, Sec. V is permitted.

ANNEXURE-VII

Sheet 1 of 1

WELDERS IDENTIFICATION CARD

Name :

Identification :

Date of Testing :

Process :

Diameter and Thickness :

Thickness Range Qualified :

Diameter Range Qualified :

WPS No. :

Welding Position & Progression :

Type of welding consumables used :

Valid Till :

Photograph

Approved by :

Employer's Signature with seal

WELDING SPECIFICATION CHART
FOR
DULIAJAN FEEDER PIPELINE PROJECT

MECON Limited	WELDING SPECIFICATION CHART FOR DULIAJAN FEEDER PIPELINE PROJECT	Specification No.: MEC/WSC/01	Rev.0

WELDING SPECIFICATION CHARTS TO SPECIFICATION FOR WELDING OF ONSHORE GAS PIPELINES NO.: MEC/S/05/21/02

24" LINE PIPE THK RANGE 6.4 to 17.48 mm				
MATERIAL SPECIFICATIONS	PIPES	**API 5L GR X-70 PSL 2**		
	FITTINGS	-		
	FLANGES	-		
	OTHERS	-		
BASE METAL 'P' NO	**1**			
WELDING PROCESS	**GROOVE JOINTS SINGLE SIDE BEVEL**			
	BUTT		**OTHER THAN BUTT**	
	ROOT PASS & HOT PASS: **SMAW**	FILLER PASS: **SMAW/FCAW**	ROOT PASS: **N.A.**	FILLER PASS: **N.A.**
	FILLET JOINTS / SOCKET JOINTS: **N.A.**			
WELDING MATERIAL	**GROOVE JOINTS**			
	BUTT		**OTHER THAN BUTT**	
	ROOT PASS: **E6010** HOT PASS: **E8010-P1**	FILLER & CAP PASS **E8010-P1(SMAW) / E81T8G (FCAW)**	ROOT PASS: **N.A.**	FILLER PASS: **N.A.**
	FILLET JOINTS / SOCKET JOINTS: **N.A.**			
	BACKING RING: N.A.		**CONSUMABLE INSERT: N.A.**	
JOINT PREPARATION	**API 1104 (latest edition)**			
GASES	PURGING:		SHIELDING:	
GAS COMPOSITION	PURGING:		SHIELDING:	
PREHEATING	PREHEAT TEMP: **100^{0}C MIN**		POST HEATING:	
CONTINUITY OF WELDINGAND PREHEAT: REFER TO SPECIFICATION				
POST WELD HEAT TREATMENT	HOLDING TEMP:	N.A.	HOLDING TIME:	
	RATE OF HEATING:	N.A.	MIN. HOLDING TIME:	
	METHOD OF COOLING	N.A.	RATE OF COOLING:	
			WIRE SPEED	
MECHANICAL PROPERTY REQUIREMENTS	CHARPY 'V' NOTCH VALUE:		MIN: **22 J**	AVERAGE: **27 J**
	AT TEMPERATURE:		0°C	
	HARDNESS:			
CODE OF FABRICATION:	**API 1104 (latest edition)**			

TECHNICAL NOTES:

1. Root & Hot Pass Welding shall be carried out by SMAW process. Filler and cap passes shall be carried out by SMAW/semi- automatic FCAW process.
2. The Non-Destructive Testing (NDT) shall be examined by computed radiography.
3. All passes by SMAW or semi-automatic FCAW welding process is permitted for Tie-ins and Crossings.
4. Selection of Welding electrode to be finalized by the contractor during EQT, Approval of procedure & WPS.

MECON Limited	WELDING SPECIFICATION CHART FOR DULIAJAN FEEDER PIPELINE PROJECT	Specification No.: MEC/WSC/02	Rev.0

WELDING SPECIFICATION CHARTS TO SPECIFICATION FOR WELDING OF ONSHORE GAS PIPELINES NO.: MEC/S/05/21/02

Terminal Piping: PIPING CLASS:		**A1A, B1A, D1A**		
MATERIAL SPECIFICATIONS	PIPES	ASTM A106 GR..B, ASTM A106 GR..B (CHARPY), API 5L GR. B PSL 2, API 5L GR. X-52,65 PSL 2		
	FITTINGS	ASTM A105, ASTM A234 GR. WPB (CHARPY), MSS-SP-75 GR. W PHY-52, ASTM A234 GR. WPB-W (CHARPY)		
	FLANGES	ASTM A105, ASTM A 105 (CHARPY), ASTM A 694 GR. F-52 (CHARPY), API 5L GR. X-,65, ASTM A 516 GR. -70		
	OTHERS	ASTM A105, ASTM A234 GR. WPB (CHARPY), MSS-SP-75 GR. W PHY-52, MSS-SP-75 GR. W PHY-65, ASTM A234 GR. WPB-W (CHARPY), ASTM A 105 (CHARPY), ASTM A 694 GR. F-52 (CHARPY)		
BASE METAL 'P' NO		**1**		
WELDING PROCESS		**GROOVE JOINTS SINGLE SIDE BEVEL**		
		BUTT		**OTHER THAN BUTT**
		ROOT PASS: **GTAW / SMAW**	FILLER PASS: **GTAW / SMAW**	ROOT PASS: **GTAW / SMAW**	FILLER PASS: **SMAW / GTAW**
		FILLET JOINTS / SOCKET JOINTS: **SMAW**		
WELDING MATERIAL		**GROOVE JOINTS**		
		BUTT		**OTHER THAN BUTT**
		ROOT PASS: **ER70S-2 / E6010** HOT PASS: **ER70S-2 / E7018-1 / E8018-1**	FILLER & CAP PASS **ER70S- 2 / ER80S-2 / E7018-1 / E8018-1**	ROOT PASS: **ER70S-2** HOT PASS: **ER70S-2 / E7018-1 / E8018-1**	FILLER PASS: **ER70S- 2 / ER80S-2 / E7018-1 / E8018-1**
		FILLET JOINTS / SOCKET JOINTS: E**7018-1.**		
		BACKING RING: N.A.		**CONSUMABLE INSERT: N.A.**
JOINT PREPARATION		**ASME SEC. –IX, latest edition**		
GASES		PURGING:		SHIELDING: Argon
GAS COMPOSITION		PURGING:		SHIELDING :**99.995%**
PREHEATING/ INTERPASS		PREHEAT TEMP: **10^0C -100^0C** **INTERPASS: Max 200^0C**		POST HEATING: N.A.
CONTINUITY OF WELDINGAND PREHEAT: REFER TO SPECIFICATION				
POST WELD HEAT TREATMENT		HOLDING TEMP:		HOLDING TIME:
		RATE OF HEATING:		MIN. HOLDING TIME:
		METHOD OF COOLING:		RATE OF COOLING:
MECHANICAL PROPERTY REQUIREMENTS		CHARPY 'V' NOTCH VALUE:	MIN: **22 J**	AVERAGE: **27 J**
		AT TEMPERATURE:	0°C	
		HARDNESS:		
CODE OF FABRICATION:		**ASME SEC. – IX / B 31.8 / OISD 226, latest edition**		

TECHNICAL NOTES:

*Selection of Welding electrode to be finalized by the contractor during EQT, Approval of procedure & WPS.

MECON Limited	WELDING SPECIFICATION CHART FOR DULIAJAN FEEDER PIPELINE PROJECT	Specification No.: MEC/WSC/03	Rev.0

WELDING SPECIFICATION CHARTS TO SPECIFICATION FOR WELDING OF ONSHORE GAS PIPELINES NO.: MEC/S/05/21/02

Terminal Piping: PIPING CLASS:	**A4A, B4A, D4A**			
MATERIAL SPECIFICATIONS	PIPES	ASTM A 333 GR.6		
	FITTINGS	ASTM A 350 GR.LF2, ASTM A 420 GR.WPL6, ASTM A 420 GR.WPL6-W		
	FLANGES	ASTM A 350 GR.LF2, CL-1		
	OTHERS	ASTM A 350 GR.LF2, ASTM A 420 GR.WPL6, ASTM A 420 GR.WPL6-W		
BASE METAL 'P' NO	**1**			
WELDING PROCESS	**GROOVE JOINTS SINGLE SIDE BEVEL**			
	BUTT		**OTHER THAN BUTT**	
	ROOT PASS: **GTAW / SMAW**	FILLER PASS: **GTAW / SMAW**	ROOT PASS: **SMAW / GTAW**	FILLER PASS: **SMAW / GTAW**
	FILLET JOINTS / SOCKET JOINTS: **SMAW**			
WELDING MATERIAL	**GROOVE JOINTS**			
	BUTT		**OTHER THAN BUTT**	
	ROOT PASS: **ER70S-2 / E6010** HOT PASS: **ER70S-2 / E7018-1**	FILLER & CAP PASS **ER70S- 2 / E7018-1**	ROOT PASS: **ER70S-2 / E6010** HOT PASS: **ER70S-2 / E7018-1**	FILLER PASS: **ER70S- 2 / E7018-1**
	FILLET JOINTS / SOCKET JOINTS: **E7018-1**			
	BACKING RING: N.A.		**CONSUMABLE INSERT: N.A.**	
JOINT PREPARATION	**ASME SEC. –IX, latest edition**			
GASES	PURGING:		SHIELDING: **Argon**	
GAS COMPOSITION	PURGING:		SHIELDING :**99.995%**	
PREHEATING	PREHEAT**/ INTERPASS** TEMP: **100^{0}C MAX**		POST HEATING:	
CONTINUITY OF WELDINGAND PREHEAT: REFER TO SPECIFICATION				
POST WELD HEAT TREATMENT	HOLDING TEMP:		HOLDING TIME:	
	RATE OF HEATING:		MIN. HOLDING TIME:	
	METHOD OF COOLING:		RATE OF COOLING:	
MECHANICAL PROPERTY REQUIREMENTS	CHARPY 'V' NOTCH VALUE:		MIN: **22 J**	AVERAGE: **27 J**
	AT TEMPERATURE:		0°C	
	HARDNESS:			
CODE OF FABRICATION:	**ASME SEC. – IX / B 31.8 / OISD 226, latest edition**			

TECHNICAL NOTES:

*Selection of Welding electrode to be finalized by the contractor during EQT, Approval of procedure & WPS.

Rev. : 0
Edition : 1

SPECIFICATION
FOR
HYDROSTATIC TESTING OF ONSHORE PIPELINE

SPECIFICATION NO.: MEC/S/05/21/03

(OIL & GAS SBU)
MECON LIMITED
DELHI 110 092

CONTENTS

SL.NO.	DESCRIPTION
1.0	SCOPE
2.0	REFERENCE CODES, STANDARDS AND SPECIFICATIONS
3.0	GENERAL
4.0	HYDROSTATIC TEST PROCEDURE MANUAL
5.0	TEST PRESSURE
6.0	EQUIPMENT AND INSTRUMENTATION
7.0	PROCEDURES
8.0	ACCEPTANCE
9.0	TERMINATION
10.0	TEST REPORT
11.0	MEASUREMENTS
12.0	CALCULATION
13.0	PRECAUTIONS DURING THE TEST
14.0	PRESERVATION OF PIPELINE

TABLES

TABLE A	DIFFERENCE BETWEEN WATER THERMAL EXPANSION FACTOR AND STEEL THERMAL EXPANSION FACTOR.

FIGURES

FIG.1	WATER COMPRESSIBILITY FACTOR VS PRESSURE AND TEMPERATURE.

1.0 SCOPE

1.1 This specification covers the minimum requirements of supply, works and operations to be performed by CONTRACTOR for hydrostatic testing of cross-country steel pipelines transporting hydrocarbons in liquid or gaseous phase under high pressure. This specification does not cover the requirements of drying/precommissioning of the tested pipelines. This specification shall be read in conjunction with the conditions of all specifications and documents included in the CONTRACT between COMPANY and CONTRACTOR.

2.0 REFERENCE CODES, STANDARDS AND SPECIFICATIONS

2.1 Reference has been made in this specification to the latest edition/ revision of the following codes, standards and specifications.

a)	ANSI B 31.8	Gas Transmission and Distribution Piping Systems.
b)	ANSI B 31.4	Liquid Petroleum Transportation Piping Systems.
c)	API RP 1110	Pressure Testing of Liquid Petroleum Pipelines.
d)	ASME Sec. VIII Div-1	Boiler & Pressure Vessel Code.
e)	OISD 226	Natural Gas Transmission Pipelines and City Gas Distribution Networks

2.2 In case of conflict between the requirements of this specification and that of the above referred coded, standards, and specifications, the requirements of this specifications shall govern.

2.3 For the purpose of this specification the following definitions shall hold:

- the words 'shall' and 'Must' are mandatory;

- the words 'Should', 'May', and 'Will' are non-mandatory, advisory or recommended.

3.0 GENERAL

3.1 Hydrostatic test shall be performed on the entire length of the pipeline. Hydrostatic test shall be performed in accordance with approved Hydrostatic Test Diagrams for each test section. The maximum length of each test section shall not exceed 50 kms.

3.2 For pipeline sections which in COMPANY's opinion, once installed would require an inordinate amount of effort for repair in case of a leak, a provisional pre-test shall be conducted. However, after installation, such pretested sections shall be tested again alongwith the entire pipeline.

3.3 Hydrostatic test shall commence only after mechanical and civil works completion, i.e., all welds have been accepted and the pipeline has been laid and backfilled according to the specifications. Hydrostatic test shall include those sections which have been previously tested, viz. Rail/ road crossing, major water crossings including test on banks and in place after installation, and scraper traps at the terminals. CONTRACTOR shall perform all works required for hydrostatic testing after obtaining prior written approval from the COMPANY.

3.4 The pipeline shall be tested in accordance with the requirements of the latest edition of ANSI B 31.8 or ANSI B 31.4, OISD 226 as applicable, and requirements laid down in this specification.

4.0 HYDROSTATIC TEST PROCEDURE MANUAL

CONTRACTOR shall prepare for COMPANY's approval a hydrostatic test procedure manual. The procedure shall strictly comply with the requirements of this specification and shall be submitted to COMPANY for approval well in advance. The procedure manual shall include all temporary materials & equipment, but not be limited to the following items:

a) For the systems to be tested, a diagram indicating all fittings, vents, valves, temporary connections, relevant elevations and ratings. The diagram shall also indicate injection locations and intake and discharge lines.

b) Estimated amount of test water, water sources, including required concentration of corrosion inhibitors and additives, procedure for inhibitor injection and control of concentration.

c) Filling and flushing procedures, including a complete description of all proposed equipment and instruments (including spares), their location and set-up.

d) The type and sequence of pigs and the pig tracking systems for cleaning and removal of air pockets. Pig inspection procedures, including procedure to be followed in case the calliper pig indicates damage.

e) Procedures for levelling and stabilization after filling and for pressurization and to allow for temperature stabilization.

f) Pressure testing procedure including a complete description of all proposed equipment and instruments (including spares), their location and set-up, and proposed system for observation and recording of data during the pressure test.

g) Procedure for detection and location of leaks.

h) Procedure for dewatering the pipeline section(s) after testing, including a complete description of all proposed equipment and instruments, (including spares), their location and set-up, the type and sequence of pigs and the pig tracking system along with the pig specifications.

i) Forms for recording the test data.

5.0 TEST DURATION AND PRESSURE

5.1 The duration of hydrostatic test shall be a minimum of 24 hours after stabilization and the test pressure shall be as indicated in the approved hydrostatic test diagram.

5.2 Unless specified otherwise in the CONTRACT, the hydrostatic test pressure shall be as follows :

For pipeline handling hydrocarbon in gaseous phase :

a) 1.25 times the design pressure for pipeline located in Class-1 and Class-2 locations as per ASME B 31.8.

b) 1.4 times the design pressure for pipeline located in Class-3 and Class-4 locations as per ASME B 31.8.

6.0 EQUIPMENT AND INSTRUMENTATION

The CONTRACTOR shall furnish all necessary equipment for performing the work as stated in cleaning, flushing, filling, levelling, stabilizing, testing and dewatering procedures. This shall include the following :

a) Pigs for filling , cleaning and gauging including

- Cleaning pigs with spring loaded steel wire brushes except for internal coated pipes. In this case pigs to be provided with nylon / polyurethane brushes.

- Four cup batching pigs

- Calliper pigs with gauge plate diameter equal to 95% of the heavy wall pipe in the pipe sections. Gauging pig fitted with gauge plate.

The CONTRACTOR shall provide sufficient number of pigs including spares.

b) Fill pumps : The CONTRACTOR shall determine the type and number of fill pumps in order to guarantee the following :

Differential head 20% greater than the maximum required.
Flow rate : 400m^3 / hr. min. ; 1000m^3 / hr. max.
If a single pump is used, a standby unit must be available.

c) Variable speed positive displacement pumps equipped with a stroke counter to pressurise the line with a known stroke and capable of exceeding the maximum test pressure by at least 20 bar.

d) Two positive displacement meters to measure the volume of water used for filling the line. These meters shall be provided with a callibration certificate not older than one month.

e) Portable tanks of sufficient size to provide a continuous supply of water to the pump during pressurizing.

f) Bourdon pressure gauges of suitable pressure range and accuracy.

g) Dead weight testers with an accuracy of 0.01 bar measuring in increments of 0.05 bar provided with a calibration certificate not older than one month.

h) Two 48 hours recording pressure gauges tested with charts and ink gauges tested with dead weight tester prior to use. These shall be installed atp the test heads.

i) Pressure recording charts.

j) Two temperature recorders for fill water.

k) Thermocouples for measuring the pipe wall temperature.

l) Two laboratory thermometers 0°C to 60°C range, accuracy ± 0.1 degree to be used in thermowells.

m) Means to measure the volume of water necessary to drop the line pressure by 0.5 bar (container on scales or graduated cylinder).

n) Injection facilities to inject additives into the test medium in the required proportions.

o) Communication equipment suitable for a continuous connection between the beginning and the end of the test section and with the inspection team along the line, in accordance with the requirements of local Authorities.

p) The temporary scraper traps shall be installed according to the testing sections fixed in the test procedure manual. Proper piping and valuing arrangements shall be available to allow launching and receiving of each pig independently.

The test heads shall be sized in conformity with ASME specification Section VIII, Division 2 with particular reference to Appendices 4 and 5.

q) Thermocouples for assuring the temperature of the pipe wall shall be installed on the pipeline to be tested:

- 1 thermocouple at about 500m distance from the pumping head.
- 1 thermocouple every 2500m of the pipe the spacing may be increased to maximum 5000m depending on the terrain and nature of sub-soil along the alignment of section.
- 1 thermocouple at about 500m distance from the terminal head.

The spacing may be increased to maximum 5000 metre depending on the terrain and nature of sub soil along the alignment of test section.

Thermocouples shall be attached on the external surface of the pipe after removal of external coating and shall be adequately protected and COMPANY's coating instructions shall be followed.

7.0 PROCEDURES

7.1 Equipment and/or parts which need not or must not be subjected to the test pressures, must be disconnected or separated from the pipeline to be tested.

7.2 If the difference of minimum and maximum atmosphere temperature should cause thermal instability on the pipe section directly exposed to atmospheric condition, the scraper traps and above ground pipeline shall be properly protected.

The pipeline test shall exclude long segments of line exposed to atmospheric conditions, viz. Aerial lengths on piers, suspension bridges, etc., which shall be tested separately.

7.3 The test medium shall be soft non-aggressive water furnished by the CONTRACTOR. The water to be used shall be filtered, shall not be contaminated, and free from sand or silt. CONTRACTOR shall submit laboratory test reports of water used for testing. The possible use of sea water shall be subject to its degree of cleanliness, the possibility of obtaining a pre determined salinity neutralization and the use of corrosion inhibitors, this at the sole discretion of COMPANY. CONTRACTOR shall provide COMPANY approved corrosion inhibitors, oxygen scavengers and bactericides to be added to the test water. The CONTRACTOR shall furnish and install all temporary piping which may be necessary to connect from source of water to its pumps and manifolds/ tankage.

7.4 Before filling operation the CONTRACTOR shall clean the pipeline by air driven pigs provided with spring loaded bushes and chisels to remove all mill scale rust/ sand from the inside of pipe section. For this purpose temporary headers for air cleaning shall be attached to the pipeline. The number of pig runs is depending upon the cleaning results and shall be determined by the COMPANY at site.

7.5 "After cleaning the pipeline by using air and acceptance by Company, gauging shall be carried out by using gauging pig. The gauge plate diameter shall be equal to 95% of inside diameter of the heaviest wall pipe in the test section. While computing the ID of heaviest wall pipe, pipe manufacturing tolerance shall not be considered. A 10mm thick aluminium plate shall be used for making gauge plate.

After receipt of gauging pig at the other end, the gauge plate shall be inspected in the presence of Company representative. A deformed, bent or severally nicked plate or damaged pig shall be evidence of gauging pig run failure and the same is not acceptable to company. In such cases the Contractor shall repair and rectify the line and repeat the gauging pig run to the satisfaction and approval of the Company Representative. Any obstruction and/ or faults such as dents, buckles, flat spots, etc. analysed and noted during gauging pig run shall be located and any necessary repair work shall be performed to rectify the same to the satisfaction of the Company. A written approval shall be obtained from Company regarding successful completion of gauging pig run.

After acceptance of gauging operation, air header shall be cut and removed. Pre-tested test headers loaded with three numbers of four cup batching pig shall be welded to test Section. Un-inhibited water equal to 10% of the volume of test section shall be introduced in front of the first pig. The first pig shall be launched by introducing about 1.5 km un-inhibited water.

Then the second pig shall be launched by pumping the inhibited water till the second pig is received at the other end. The thermal stablisation and pressurisation can now the started".

7.6 Thermal Stabilization

After a check has been made to confirm if the pressure has attained at least 1 bar (g) on the highest section, thermal stabilization can be started.

Thermal equilibrium between the pipeline and environment shall be checked through the thermocouples installed on the pipeline.

Temperature readings shall be made at 2 hours-intervals. Thermal stabilization shall be considered to have been achieved when a difference not higher than 1°C is attained between the average values of the last two readings. Thermal stabilization completion shall be approved by COMPANY.

7.7 Pressurisation

Pressurisation shall be performed in the presence of COMPANY at moderate and constant rate not exceeding 2 bars/min. One pressure recording gauge shall be installed in parallel with the dead weight tester. Volume required to reach the test pressure shall be recorded periodically throughout the pressurization as follows:

- each 5 bar increments up to 80% of test pressure as recorded by the dead weight tester;
- each 2 bar increment between 80% to 90% of test pressure as recorded by the dead weight tester;
- each 0.5 bar increment between 90% of test pressure to full test pressure as recorded by the dead weight tester.

The pressurizing shall be cycled according to the following sequence:

a) Pressurize to 50% of test pressure, hold pressure for 1 hour.

b) Drop pressure to static head of test section at test head.

c) Pressurize to 75% of test pressure, hold pressure for 1 hour.

d) Drop pressure to static head of test section at the test head.

e) Pressurize to test pressure.

During the pressurization to each test pressure, two tests shall be carried out for the calculation of air volume in the pipeline under test.

In case, during the hold pressure periods indicated above, a decrease in pressure is observed, the operations shall not be repeated more than twice, after which the line shall not be considered capable of test, until the CONTRACTOR has isolated and eliminated the cause for the lack of water tightness.

7.8 Air Volume Calculation

In order to check the presence of air in the pipeline, two separate consecutive pressure lowering of 0.5 bar shall be carried out.

For calculation of air in the pipeline the second pressure lowering shall be used, and the relevant drained water shall be accurately measured (V_1). This amount measured shall be compared to the theoretical amount (V_p) corresponding to the pressure lowering that has been carried out, by using the procedure outlined in clause 12.1 of this specification.

If no air is present in the length under test:

$$\frac{V_1}{V_p} = 1$$

In order that the above ratio is acceptable, it shall not differ from 1 by more than 6% (i.e. 1.06).

If the air found in the pipeline is within the above established tolerance, then the pressurizing can continue. If the ratio V_1 / V_p exceeds 1.06, the hydrostatic testing cannot go on and additional pig passages shall be performed to remove the air pockets.

The test shall be repeated as per the above procedure until above estimated tolerances are satisfied. The pressurizing can then continue, to reach the value of test pressure.

7.9 Testing

After the section has been pressurized and the air volume test has given acceptable results the test pressure shall be held for a minimum of 24 hours after stabilization. After temperature and pressure has stabilized, the injection pump shall be disconnected and all connections at the test heads shall be checked for leakage. The pressure recorders shall then be started with the charts in a real time orientation for continuous recording throughout the test.

During the testing period the following measurements shall be recorded :

- every one hour pressure measurements form dead weight testers.
- every two hours the ambient temperature and the pipe temperature at the thermocouples.

All data shall be recorded on appropriate forms attached to the hydrostatic test procedure manual. Care shall be taken that the maximum test pressures are not exceeded.

Bleed-off water shall be accurately measured and recorded.

8.0 ACCEPTANCE

8.1 The hydrostatic test shall be considered as passed if pressure has kept a constant value throughout the test duration, except for change due to temperature effects. Such change shall be evaluated as described under clause 12.2 of this specification.

The pressure change value as a function of temperature change shall be algebraically added to the pressure value as read on the meters. The pressure value thus adjusted shall be compared with the initial value and the test shall be considered as acceptable if the difference is less than or equal to 0.3 bar. In case of doubt the testing period shall be extended by 24 hours.

8.2 If test section fails to maintain the specified test pressure after isolation, CONTRACTOR shall determine by search the location of leakage or failure. All leaks and failures within the pipe wall or weld seam shall be repaired by replacement of entire joint or joints in which leakage or failure occurs. In circumferential welds the method of repair shall be determined by the COMPANY. CONTRACTOR shall comply with instructions of the COMPANY whether to replace a section of the line pipe that includes the line leak or whether to repair the circumferential weld. This repair should however meet the requirements of 'Specification for Welding Pipelines and Related Facilities'. Where failure occur in pipeline field bends, bends shall be replaced with same degree of bends. After completion of repairs, the hydrostatic test shall be repeated in full, as per this specification.

8.3 The cost of repairs or replacements, followed by refilling and repressurizing the line, due to poor workmanship, shall be borne by the CONTRACTOR. In the event of leaks or failures resulting form faulty COMPANY furnished materials, CONTRACTOR shall be reimbursed for furnishing all labour, equipment, materials, except those materials furnished by the COMPANY, and transportation necessary to repair and repressurize the section of the pipeline to the pressure at the time of recognition of leak or line failure. CONTRACTOR shall be entitled for compensation as per the provisions of the CONTRACT. All work of reinstalling line pipe, to replace pipe failures shall be done in accordance with the relevant specification included in the CONTRACT.

8.4 CONTRACTOR shall haul and stockpile all damaged and defective pipes to storage locations designated by the COMPANY. All cracks and splice resulting from failures shall be coated with an application of grease to preserve the characteristics of failures from corrosion. Joint of failed pipes shall be marked with paint, with a tag indicating failure details, date and location of failure and pressure at which failure occurred.

9.0 TERMINATION

After the positive results of testing and collection of all data the test shall be terminated upon written approval given by the COMPANY.

9.1 CONTRACTOR shall dewater the tested line as per the following requirement after test acceptance.

The dewatering shall be carried out by using four cup pigs and foam pigs driven by compressed air. The detailed dewatering procedure shall be developed by the CONTRACTOR

in such a way as to provide adequate control of pigs during dewatering. Pigs and equipment required for dewatering the line shall be furnished by CONTRACTOR and shall be approved in advance by the COMPANY. Four cup pigs shall first be passed through the line to displace the water. Foam pigs shall then be passed in order to complete the line dewatering. CONTRACTOR shall use a number of foam pigs, each in different colors/ numbered for this purpose. The line shall be considered dewatered when a negligible amount of water is flushed out by the last foam pig and approval is given by the COMPANY.

9.2 During dewatering, care shall be taken to properly dispose the discharging water in order to avoid pollution, damages to fields under cultivation and/or existing structures and interference with the traffic. Before start of dewatering and disposal of hydrotest water, a procedure for treatment of inhibited water to prevent pollution shall be submitted by contractor to owner/ consultant for review and approval.

9.3 Upon completion of the testing and dewatering operation, any provisional traps for pigs and all other temporary installation relating to the test shall be removed. Subsequently the individual sections of the line already tested shall be joined in accordance with the requirements of relevant specifications issued for the purpose.

10.0 TEST REPORT

A complete report signed by CONTRACTOR and the COMPANY shall be submitted upon completion of the hydrostatic test for each test section.
This report shall contain as a minimum:

- the cleaning, flushing, filling and testing procedures used;
- schematic layout of cleaning, filling and testing facilities;
- instruments calibration certificates;
- a profile of the pipeline that shows the test sites, all instrument and injection connections;
- pipe filling logs and records;
- additive specification, required concentration and additive injection records;
- pig specifications;
- pig inspection records including photographs of the damages;
- records of gauging pig survey and photographs;
- pressurization and stabilization records;
- pressure and temperature recording charts with appropriate information inscribed thereon;

- temperature data along the pipeline;
- dead weight tester logs and recording;
- air volume calculations;
- pressure change due to temperature change calculations;
- environmental data;
- depressurization logs and records;
- dewatering procedure and schematic layout of relevant facilities;
- dewatering logs and records;
- records and photograph of all leaks.

11.0 MEASUREMENTS

11.1 Water Amount Measurement

The water volume added to the section to be tested shall be measured during the filling stage through a positive displacement meter (a turbine meter may also be used). In the calculation, as per clause 12.1 of this specification, use shall be made of the geometrical volume of the section in question.

11.2 Pressure Measurement

Pressure shall be measured with a dead weight tester with an accuracy of 0.01 bar that shall permit readings of at least 0.05 bar.

During the test the pressure shall be recorded by means of a pressure recorder featuring the following specifications:

Accuracy	:	± 0.1% of the full-scale value
Recording	:	continuous on tape or disk, graph width 100mm
Feed	:	20mm/h for tape diagrams, 7.5°/h for disk diagrams
Recording	:	to be such as to record pressure between 50% and 90% of the diagram width.

The pressure recorder shall be checked by means of dead weight tester at the beginning, during and at the end of the hydrostatic test.

A pressure gauge tested with dead weight tester shall be connected in parallel to the dead weight tester at the test head.

11.3 **Temperature Measurements**

Water temperature shall be taken at every 2 hours through the thermocouple that have been installed on the pipe wall along the section under test on the pipe wall.
Further the temperature measurement shall be taken :

- during the filling operation
- during the thermal stabilization stage
- during the hydrostatic test

The thermocouple's sensitivity shall enable temperature readings with an accuracy of ±0.2°C.

b) Water temperature shall also be measured on the pump delivery by means of a recording thermometer (temperature recorder) throughout the filling stage.

The recording thermometer shall have the following features :

Accuracy ± 1% of the scale range

Scale - 10° to + 40° C

Recording: Continuous on tape or disk, diagram within 100mm

Feed : 20mm/h for tape diagrams, 7.5°/h for disk diagrams.

c) Ground temperature shall be taken by measuring pipe temperature at the thermocouple prior to starting the filling operation.

d) Environmental temperature shall be recorded from the beginning of pressurization to the end of the test by means of a recording thermometer featuring the following characteristics:

Accuracy ± 1% of the scale range

Scale - 0° to + 60° C

Recording: Continuous on tape or disk, diagram width 100mm

Feed : 20mm/h for tape diagrams, 7.5°/h for disk diagrams.

12.0 **CALCULATIONS**

12.1 The theoritical water amount that is necessary for filling the section to be tested shall be obtained from the geometrical volume of the section considering the pipe tolerances.

The theoretical water amount that is necessary for pressurizing the section shall be calculated by means of the following formula:

$$Vp = (0.884\ r\ i/t + A) \times 10^{-6} \times V_t \times \Delta P \times K$$

Where:

Vp = computed water amount required to raise by P the pressure in the section to be tested (m^3).

Vt = geometrical volume of the section (m^3)

Δ P = Pressure rise (bar)

r i = nominal inner radius of the pipe (mm)

t = nominal pipe thickness(mm)

A = isothermal compressibility value for water at the pressurization temperature in the P range (bar_{-1}) x 10^6.

(Refer water compressibility factor vs pressure and temperature chart). For temperature above 30°C the values may be extrapolated.

K = a dimensionless coefficient that is equal to a value of 1.02 for longitudinally welded pipe.

12.2 The pressure change due to a water temperature change shall be calculated by the following formula:

$$\Delta P = \frac{B}{0.884\ r\ i/\ t + A}\ \Delta T$$

Where,

ΔP = pressure change resulting from a temperature change (bar)

ΔT algaebrical difference between water temperature at the beginning of the test and water temperature as measured at the end of the test (°C).

B = value of the difference between the thermal expansion of water at the pressure and temperature as measured at the end of the test and that of steel ($°C^{-1}$) x 10^6

(Refer table – A)

A = Isothermal compressibility value of water as estimated at the pressure and temperature values obtained at the end of test (bar^{-1}) x 10^6 (Refer Figure 1)

r i = nominal inner radius of the pipe (mm).

t = nominal thickness of pipe (mm).

13.0 PRECAUTIONS DURING THE TEST

In addition to all that has been expressly described in the procedures for carrying out the tests, the following additional requirements shall be complied with:

13.1 Provision shall be made for the installation of no-admittance signs to unauthorized personnel from the roads to the R.O.W.

13.2 Signs stating "PIPE UNDER TEST-KEEP OFF" with local language translation shall be placed where the pipeline is uncovered, and particularly where the provisional traps and stations are located. Such areas shall be suitably fenced in such a way as to prevent access of unauthorized personnel. No unauthorized personnel shall be closer than 40 m to the pipeline or equipment under test.

13.3 Provisional scraper traps shall be installed in compliance with methods and suitable locations so that their rupture cannot cause any injuries to the personnel or third parties.

13.4 The test station shall be placed in such a location as to prevent it from being affected by a catastrophic failure in the test head.

13.5 Once dewatering is over, the sectionalizing valves and other valve assemblies tested previously, shall be installed at locations shown in the drawings and in accordance with the procedures contained in the relevant specifications. All thermocouple installed in the pipeline shall be removed and damaged corrosion coating shall be repaired using COMPANY approved materials and procedure.

14.0 PRESERVATION OF PIPELINE

When so stated in the CONTRACT, to preserve/conserve the pipeline for a specified duration, CONTRACTOR shall completely fill the pipeline with water, with sufficient quantity of corrosion inhibitors depending upon quality of water and the period of conservation, at a pressure to be agreed upon with the COMPANY at a later stage. CONTRACTOR shall obtain necessary approval from the COMPANY of the procedure and the type and quantity of the inhibitors used before commencement of the works.

TABLE - A

^{0}C Bar	1	2	3	4	5	6	7	8
0.981	-98.62	-79.89	-61.81	-44.34	-27.47	-11.14	+4.66	+19.98
10	-95.55	-76.94	-58.99	-41.65	-24.89	-8.67	+7.02	+22.23
20	-92.15	-73.68	-55.86	-38.64	-22.01	-5.92	+9.65	+24.74
30	-88.74	-70.40	-52.72	-35.63	-19.14	-3.16	+12.29	+27.26
40	-85.32	-67.12	-49.58	-32.62	-16.24	-0.41	+14.93	+29.78
50	-81.90	-63.84	-46.43	-29.60	-13.36	+2.36	+17.57	+32.31
60	-78.47	-60.55	42.27	-26.58	-10.46	+5.15	+22.89	+34.85
70	-75.03	-57.25	-40.10	-23.54	-7.56	+7.92	+22.89	+37.39
80	-71.60	-53.96	-36.94	-20.51	-4.65	+10.70	+25.55	+39.94
90	-68.16	-50.66	-33.77	-17.47	-1.73	+13.50	+28.23	+42.50
100	-64.72	-47.35	-30.60	-14.43	+1.18	+16.29	+30.90	+45.05
110	-61.28	-44.05	-27.43	-11.38	+4.10	+19.08	+33.58	+47.61
120	-57.84	-40.74	-24.26	-8.34	+7.02	+21.88	+36.26	+50.18
130	-54.40	-37.44	-21.08	-5.29	+9.95	+24.68	+38.94	+52.75
140	-50.96	-34.13	-17.90	-2.25	+12.87	+27.49	+41.63	+55.32
150	-47.53	-30.83	-14.73	+0.80	+15.79	+30.29	+44.31	+57.89
160	-44.10	-27.53	-11.56	+3.85	+18.72	+33.10	+47.00	+60.46
170	-40.67	-24.23	-8.40	+6.89	+21.64	+35.90	+49.69	+63.04
180	-37.24	-20.94	-5.23	+9.94	+24.56	+38.70	+52.37	+65.62
190	-33.83	-17.65	-2.06	+12.98	+27.48	+41.51	+55.06	+68.19
200	-30.42	-14.37	+1.09	+16.01	+30.40	+44.30	+57.75	+70.77
210	-27.02	-11.09	+4.25	+19.04	+33.31	+47.10	+60.43	+73.34
220	-23.63	-7.82	+7.40	+22.06	+36.22	+49.90	+63.12	+75.90
230	-20.24	-4.56	+10.54	+25.08	+39.13	+52.69	+65.80	+78.48
240	-16.87	-1.30	+13.67	+28.10	+42.03	+55.48	+68.48	+81.05
250	-13.50	+1.94	+16.79	+31.11	+44.92	+58.26	+71.15	+83.61
260	-10.14	+5.17	+19.90	+34.12	+47.81	+61.04	+73.81	+86.81
270	-6.80	+8.39	+23.00	+37.11	+50.69	+63.80	+76.48	+88.73
280	-3.48	+11.60	+26.11	+40.09	+53.56	+66.57	+79.14	+91.29
290	-0.17	+14.80	+29.19	+43.07	+56.43	+69.33	+81.78	+93.83
300	+3.13	+17.98	+32.27	+46.03	+59.29	+72.06	+84.83	+96.38

DIFFERENCE BETWEEN THE WATER THERMAL EXPANSION FACTOR AND THE STEEL THERMAL EXPANSION FACTOR ($^0C^{-1}$) (10^{-6})

TABLE - A

^{0}C Bar	9	10	11	12	13	14	15
0.981	+34.82	+4922	+63.20	+76.78	+89.99	+102.83	+115.34
10	+36.97	+51.26	+65.15	+78.64	+91.75	+104.51	+116.93
20	+39.36	+53.55	+67.33	+80.71	+93.72	+106.39	+118.71
30	+41.76	+55.84	+69.51	+82.79	+95.70	+108.26	+120.49
40	+44.18	+58.14	+71.70	+84.87	+97.68	+110.14	+122.28
50	+46.60	+60.45	+73.90	+86.96	+99.68	+112.04	+124.07
60	+49.02	+62.76	+76.10	+89.07	+102.67	+113.93	+125.88
70	+51.44	+65.08	+78.32	+91.17	+103.68	+115.84	+127.69
80	+53.88	+67.40	+80.53	+93.29	+105.69	+117.76	+129.50
90	+56.32	+69.73	+82.75	+95.41	+107.70	+119.67	+131.32
100	+58.77	+72.07	+84.98	+97.53	+109.73	+121.59	+133.15
110	+61.21	+74.41	+87.22	+99.66	+111.75	+123.52	+134.98
120	+63.67	+76.74	+89.45	+101.79	+113.79	+125.46	+136.82
130	+66.12	+79.09	+91.69	+103.93	+115.83	+127.39	+138.67
140	+68.58	+81.45	+93.93	+106.07	+117.67	+129.34	+140.51
150	+71.05	+83.80	+96.18	+108.21	+119.90	+131.20	+142.37
160	+73.51	+86.15	+18.43	+110.36	+121.96	+133.74	+144.22
170	+75.97	+88.51	+100.68	+112.51	+124.01	+135.19	+146.08
180	+78.44	+90.87	+102.94	+114.66	+126.06	+137.15	+147.94
190	+80.91	+93.23	+105.19	+116.82	+128.12	+139.11	+149.81
200	+83.37	+95.59	+107.45	+118.97	+130.17	+141.07	+151.68
210	+85.84	+97.95	+109.71	+121.13	+132.24	+143.03	+153.55
220	+88.30	+100.31	+111.97	+123.29	+134.29	+144.99	+155.42
230	+90.67	+102.67	+114.23	+125.45	+136.36	+146.96	+157.30
240	+93.22	+105.03	+116.48	+127.60	+138.42	+148.93	+159.18
250	+95.69	+107.39	+118.74	+129.76	+140.48	+150.90	161.05
260	+98.14	+109.74	+121.00	+131.92	+142.54	+152.87	+162.93
270	+100.60	+112.10	+123.25	+134.08	+144.61	+154.84	+164.81
280	+103.05	+114.44	+125.50	+136.24	+146.67	+156.84	+166.69
290	+105.50	+116.79	+127.75	+138.39	+148.73	+158.78	+168.57
300	+107.94	+119.13	+130.00	+140.54	+150.79	+160.75	+170.45

DIFFERENCE BETWEEN THE THERMAL EXPANSION FACTOR THE STEEL THERMAL EXPANSION FACTOR (^{0}C $^{-1}$) (10 $^{-6}$)

TABLE - A

^{0}C Bar	16	17	18	19	20	21	22	23
0.981	+127.52	+139.41	+151.00	+162.31	+173.37	+184.18	+194.75	+205.08
10	+129.02	+140.83	+152.36	+163.58	+174.56	+185.30	+195.79	+206.07
20	+130.71	+142.42	+153.85	+165.00	+175.90	+186.55	+196.96	+207.16
30	+132.40	+144.02	+155.35	+166.42	+177.23	+187.80	+198.14	+208.26
40	+134.10	+145.62	+156.87	+167.85	+178.58	+189.07	+199.33	+209.37
50	+135.80	+147.24	+158.39	+169.85	+179.93	+190.34	+200.52	+210.49
60	+137.51	+148.86	+159.92	+170.73	+181.29	+191.62	+201.72	+211.61
70	+139.22	+150.49	+161.46	+172.18	+182.66	+192.91	+202.93	+212.74
80	+140.95	+152.11	+163.00	+173.64	+184.03	+194.20	+204.14	+213.88
90	+142.67	+153.75	+164.56	+175.10	+185.41	+195.50	+205.36	+215.03
100	+144.42	+155.40	+166.11	+176.58	+186.80	+196.80	+206.59	+216.17
110	146.15	+157.04	+167.66	+178.05	+188.20	+198.12	+207.82	+217.33
120	+147.90	+158.70	+169.24	+179.54	+189.59	+199.44	+209.06	+218.49
130	+149.65	+160.36	+170.81	+181.02	+191.00	+200.75	+210.31	+219.66
140	+151.40	+162.03	+172.39	+182.51	+192.41	+202.09	+211.56	+220.84
150	+153.16	+163.70	+173.98	+184.00	+193.82	+203.42	+212.81	+222.02
160	+154.93	+165.37	+175.56	+185.51	+195.24	+204.76	+214.08	+223.20
170	+156.69	+167.05	+177.15	+187.02	+196.66	+206.10	+215.34	+224.39
180	+158.47	+168.73	+178.75	+188.53	+198.09	+207.45	+216.61	+225.55
190	+160.24	+170.42	+180.35	+190.05	+199.52	+208.80	+217.89	+226.79
200	+162.01	+172.10	+181.95	+191.57	+200.97	+210.16	+219.17	+227.99
210	+163.80	+173.80	+183.55	+193.09	+202.40	+211.53	+220.46	+229.20
220	+165.58	+175.43	+185.16	+194.62	+203.85	+212.89	+221.74	+230.41
230	+167.36	+177.19	+186.78	+196.14	+205.30	+214.26	+223.04	+231.63
240	+169.16	+178.89	+188.39	+197.68	+206.75	+215.63	+224.33	+232.85
250	+170.94	+180.59	+190.01	+199.21	+208.20	+217.00	+225.63	+234.08
260	+172.73	+182.30	+191.63	+200.75	+209.66	+218.40	+226.93	+235.31
270	+174.53	+184.00	+193.25	+202.29	+211.12	+219.77	+228.24	+236.54
280	+176.32	+185.70	+194.88	+203.83	+212.59	+221.16	+229.55	+237.77
290	+178.11	+187.42	+196.50	+205.37	+214.05	+222.54	+230.86	+239.01
300	+179.90	+189.13	+198.13	+206.92	+215.51	+223.93	+232.18	+240.26

DIFFERENCE BETWEEN THE WATER THERMAL EXPANSION FACTOR AND THE STEEL THERMAL EXPANSION FACTOR ($^0C^{-1}$) (10^{-6})

TABLE -A

^{0}C Bar	24	25	26	27	28	29	30
0.981	+215.22	+215.14	+234.88	+244.41	+253.79	+263.00	+272.03
10	+216.13	+225.99	+235.66	+245.13	+254.44	+264.59	+272.57
20	+217.15	+226.94	+236.53	+245.94	+255.18	+264.27	+273.18
30	+218.18	+227.88	+237.41	+246.75	+255.93	+264.95	+273.80
40	+219.21	+228.85	+238.30	+247.58	+256.69	+265.64	+274.42
50	+220.25	+229.82	+239.20	+248.40	+257.45	+266.33	+275.07
60	+221.30	+230.79	+240.11	+249.24	+258.22	+267.04	+275.70
70	+222.35	+231.78	+241.02	+250.08	+258.99	+267.75	+276.35
80	+223.42	+232.77	+241.94	+250.93	+259.78	+248.47	+277.01
90	+224.48	+233.76	+242.87	+251.79	+260.57	+269.19	+277.66
100	+225.56	+234.76	+243.79	+252.66	+261.36	+269.92	+278.33
110	+226.64	+235.78	+244.73	+253.53	+262.17	+270.77	+279.01
120	+227.73	+236.79	+245.68	+254.40	+262.98	+271.41	+279.69
130	+228.82	+237.81	+246.63	+255.28	+263.69	+272.16	+280.38
140	+229.92	+238.84	+247.59	+25618	+264.62	+272.92	+281.08
150	+231.03	+239.87	+248.55	+257.07	+265.44	+273.69	+281.78
160	+232.14	+240.91	+249.52	+257.97	+266.28	+274.46	+282.49
170	+233.26	+241.96	+250.49	+258.88	+267.12	+275.23	+283.20
180	+234.38	+243.01	+251.47	+259.79	+267.97	+276.01	+283.92
190	+235.51	+244.06	+252.46	+260.71	+268.82	+276.80	+284.64
200	+236.64	+245.12	+253.45	+261.63	+269.67	+277.59	+285.37
210	+237.77	+246.18	+254.45	+262.50	+270.54	+278.39	+286.11
220	+238.91	+247.26	+255.45	+263.49	+271.40	+279.19	+286.85
230	+240.06	+248.33	+256.46	+264.43	+272.28	+280.00	+287.59
240	+241.21	+249.41	+257.46	+265.37	+273.16	+280.82	+288.35
250	+242.36	+250.49	+258.48	+266.31	+274.04	+281.63	+289.11
260	+243.52	+251.58	+259.49	+267.27	+274.92	+282.46	+289.86
270	+244.68	+252.66	+260.52	+268.23	+275.82	+283.29	+290.64
280	+245.84	+253.76	+261.54	+269.18	+276.71	+284.12	+291.40
290	+247.01	+254.86	+262.57	+270.15	+277.61	+284.95	+292.18
300	+248.18	+255.96	+263.60	+271.11	+278.51	+285.79	+292.95

DIFFERENCE BETWEEN THE WATER THERMAL EXPANSION FACTOR AND THE STEEL THERMAL EXPANSION FACTOR ($^0C^{-1}$) (10^{-6})

Rev. : 0
Edition : 1

SPECIFICATION
FOR
MAJOR WATER CROSSINGS
(CONVENTIONAL)

SPECIFICATION NO.: MEC/S/05/21/04

(OIL & GAS SBU)
MECON LIMITED
DELHI 110 092

CONTENTS

SL.NO.	DESCRIPTION
0.0	DEFINITION
1.0	SCOPE
2.0	GENERAL
3.0	TRENCHING
4.0	CONTINUOUS CONCRETE COATING
5.0	HYDROSTATIC PRE-TESTING
6.0	INSTALLATION
7.0	BACKFILLING AND BANK PROTECTION
8.0	FINAL HYDROSTATIC TEST
9.0	POST-CONSTRUCTION SURVEY
10.0	FINAL CLEAN-UP
11.0	DOCUMENTATION

00 **DEFINITION**

A **major water crossing** shall be reckoned the one which will necessitate passing the gas pipeline across a water body such as perennial river, major irrigation canal, pond, lake, lagoon, creek etc. using special attention and means. The parameters required to classify a particular water body as a **major water crossing** shall comprise of size, hydrological data, authority/ownership, importance and other ecological/ environmental factors associated with it, and the authority to classify it such, shall rest with the COMPANY.

1.0 **SCOPE**

1.1 This specification covers the minimum requirements for the various activities to be performed by CONTRACTOR for the construction of pipeline major water crossings by conventional trenching method. Provisions of this specification are applicable only for "major water crossings" specifically named as such in the CONTRACT.

1.2 This specification shall be read in conjunction with the conditions of all specifications and documents included in the CONTRACT between COMPANY CONTRACTOR.

1.3 CONTRACTOR shall, with due care and diligence, execute the work in compliance with all laws, by-laws, ordinances, regulations etc. and provide all services and labour, inclusive of supervision thereof, all materials excluding the materials indicated as "Company supplied Materials" in the CONTRACT, equipment, appliances or other things of whatsoever nature required in or about the execution of the work, whether of a temporary or permanent nature.

1.4 CONTRACTOR shall take full responsibility for the stability and safety of all operations and methods involved in the work.

1.5 CONTRACTOR shall be deemed to have inspected and examined the work area and its surroundings and to have satisfied himself so far as practicable as to the form and nature thereof, including sub-surface conditions, hydrological and climatic conditions, the extent and nature of the work and materials necessary for the completion of the work, and the means of access to the work area.

1.6 CONTRACTOR shall be deemed to have obtained all necessary information as to risks, contingencies and all other circumstances, which may influence the work w.r.t. the above.

1.7 CONTRACTOR shall, in connection with the work, provide and maintain at his own costs all lights, guards, fencing, watching etc., when and where necessary or required by COMPANY or by any duly constituted authority for the protection of the work and properties or for the safety and the convenience of public and/ or others.

1.8 For the purpose of this specification, the following definitions shall hold :

- the words `Shall' and `Must' are mandatory

- the words `Should', `May' and `Will' are non-mandatory, advisory, or recommended.

2.0 GENERAL

2.1 All works of the pipeline major water crossing shall be performed in accordance with the approved construction drawings, procedures, other applicable documents as per the CONTRACT, good pipeline practice and as directed by COMPANY.

2.2 Before start of the field construction, CONTRACTOR shall submit to COMPANY, for approval for each major water crossing a complete report containing at the minimum:

i) installation method

ii) proposed time schedule indicating start and finish dates and detailed break-up of time period for all critical activities associated with the work.

iii) required work area along with layout and location

iv) equipment to be used (including number and capacity of equipment).

v) manpower deployment during construction

vi) proposed sub-contractors and/ or vendors along with their scope of work.

The description of the installation method as a minimum shall include the following:

a) Study of water currents in relation to the method of launching (on bottom and on surface).

b) Calculation for stability of pipeline during launching and final test.

c) Buoyancy studies

d) Preparation of fabrication yard and launching areas.

e) Pipeline construction details (handling, stringing, welding, concrete coating etc.)

f) Pre-test procedure including trial mix, design & tests for concrete coating.

g) Procedure for corrosion coating of field joint

h) Dredging, anchoring program, spoil-deposit and trench survey method including facilities for COMPANY.

i) Pulling or other installation method and related calculations.

j) Pulling arrangement including launchway and anchoring and breaking device.

k) Trench correction before launching.

l) Method of positioning and sinking of pipeline.

m) Method of rectification of damages to the pipeline, during launching.

n) Method of backfilling, bank protection and survey.

o) Final test procedure after backfilling.

p) Safety systems during launching, rope tests.

q) Communication.

r) Abandonment and recovery procedures concurred.

s) Necessary permission from concerned authorities for crossing.

COMPANY shall inform CONTRACTOR within 21 days if any objection against the document and procedure described requires resubmission by CONTRACTOR.

Approval by COMPANY of the methods used by CONTRACTOR shall in no way relieve CONTRACTOR from the sole responsibility for safe and satisfactory installation of the crossing.

2.3 CONTRACTOR shall comply with all the conditions and requirements issued by authorities having jurisdiction in the area where the work is to be performed. CONTRACTOR shall, at his own responsibility, obtain necessary permits from the authorities having jurisdiction, for performing his work.
If no public roads exist, CONTRACTOR shall arrange on his own for access to his work area at no extra cost to COMPANY.

2.4 **Pre-construction Surveys**

Prior to start of any work, CONTRACTOR shall carry out a survey of the major water crossings and acquaint himself with site conditions and to collect any data regarding the water velocity and the tidal variations in the flow pattern and shall verify the suitability of his equipment and the methods of construction.

3.0 **TRENCHING**

3.1 **Dredging/ Excavating**

3.1.1 CONTRACTOR shall dredge or excavate the trench for the water crossing in conformity with the approved drawings. Dredging of the trench shall be executed as accurately as possible.

3.1.2 The trench shall be excavated to such depth as required to provide the minimum cover and the pipeline configuration as specified. The pipeline profile of the crossings shall be followed as accurately as possible. Before laying, the trench shall be cleaned and levelled. The trench shall be subject to inspection by COMPANY prior to installation of the pipe.

3.1.3 Navigational traffic shall not be obstructed, unless permission has been given thereto. CONTRACTOR shall issue all necessary publications according to the local regulations. Instructions given by authorities shall be followed accurately and immediately, so that there in no hindrance to traffic. For stoppage of navigational traffic public notification, PA system, signal/ sign etc. shall be provided.

CONTRACTOR cannot request a compensation if his work is hampered or delayed due to weather conditions, any obstacles/ or by any traffic on the spot, where work is executed.

3.1.4 CONTRACTOR is fully responsible for the execution of the blasting (whenever permitted) the dredging and excavation work, hopping of the soil, transportation, dumping on land or in water, all to be executed in agreement with authorities, land owners and COMPANY.

3.1.5 CONTRACTOR may be obliged to dredge or excavate a trench deeper or wider than indicated in the drawings in order to properly lay the pipeline in unstable (underwater) areas, or near and adjacent to the banks of water courses. It shall be understood that CONTRACTOR is aware of such problems at the time of this bid and that, when such additional excavation is required, it shall be done by CONTRACTOR as part of the work and that he will install the necessary provision and/ or temporary works such as sheet-piling, special filling materials, etc. at no extra cost to COMPANY.

3.1.6 During, the execution of dredging work of CONTRACTOR, bearings, measurements and levels shall be taken by or on behalf of COMPANY. CONTRACTOR shall render assistance for this purpose and make available for COMPANY appropriate survey boats, fully manned and equipped before the start of excavation work of the water crossing trench. CONTRACTOR, if so desired by COMPANY, shall make cross profiles at intervals of not more than 10.0m of the bottom of the water-course along the surveyed center line of the water crossing. In such a case horizontal measurements shall be taken by triangulation or taping between known points and shall be made with such accuracy that the location of each vertical measurement is known within 1.0m. Vertical measurements shall be taken with a sonic recording device, or with line and rod, as directed by COMPANY and shall be taken with such accuracy that each depth is known within 0.2m. Vertical measurements shall be taken at points averaging not more than 5.0m apart and no two measurements shall be more than 7.0m apart. The cross profiles shall extend at least 10m on both sides of the top of the trench.

All measurements shall be witnessed by COMPANY. The resulting profile, corrected to the elevation of the undisturbed water-course, shall then be the reference profile. Said profile shall be plotted on a 1:200 vertical and horizontal scale.

3.1.7 CONTRACTOR shall keep the trench in good condition until the pipe is laid, and no claim is to be made to the COMPANY by reason of its caving either before or after the pipe is laid. CONTRACTOR shall do whatever is required to excavate the trench, install the pipe in it and backfill the trench in accordance with these specifications at no extra cost to COMPANY.

3.1.8 Immediately before installation of the water crossing in the excavated trench, CONTRACTOR shall prepare a profile of the trench bottom along the surveyed center line of the water crossing for comparison with the reference profile. CONTRACTOR shall also make cross sections of the trench at intervals of not more than 100m. All profile and cross section measurements shall be taken as specified and shall be witnessed by COMPANY. These data shall be submitted to COMPANY for approval and COMPANY will approve or reject the trench excavation as completed within 24 hours after receipt of the profile and cross sections.

3.1.9 CONTRACTOR shall grade the trench in such a manner as to give the maximum amount of uniform support to the pipeline when it is lowered or pulled into place. The maximum unsupported span shall not exceed 10.0m.

3.1.10 In submerged sections, where rock or gravel is encountered in the bottom of the trench, padding is required. The thickness of the padding under the concrete coated pipe shall at least be 50 cm and after installation at least 50 cm around the pipe.

Blasting, if any, and padding shall be included in the work.

3.2 **Pumping Line**

In case CONTRACTOR uses pumping lines to discharge the spoil, he shall take care of the necessary permits.

Pumping lines, discharges and siphons shall be installed by CONTRACTOR and removed before the completion of the work. At crossings with existing roads, the pumping lines shall be led through a casing pipe bored/ jacked under the road or led through a porch over the road. A stress calculation must then be handed over to COMPANY. The necessary provisions to embank the dumping area and also the spoil basins shall be made by CONTRACTOR. CONTRACTOR is responsible for transportation of the soil and dumping on land and is liable for damage to works of third parties caused by leakage of pumping lines, etc. CONTRACTOR shall at all time prevent overflow of pumping water, spoil or sand over embankments, parcels or roads. Further more, CONTRACTOR shall safeguard COMPANY from claims of compensation by third parties due to encountered damage.

3.3 **Spoil**

Spoil which is not dumped on and including spoil acquired after cleaning the water crossing trench, shall be transported and dumped in places, designated thereto by agreement between CONTRACTOR and authorities and approved of by COMPANY. Spoil shall be transported in (split) barges; only those barges shall be used that avoid spilling during transportation due to incorrect closing of the flaps, etc. Spoil which is dumped outside the designated places shall be removed by CONTRACTOR at first notice by COMPANY.

3.4 **Dykes, Dams and Weirs**

CONTRACTOR shall install temporary provisions in the existing dykes, dams, etc. to prevent flooding of low areas.

Therefore in general, in existing dykes, dams, etc a double substituting weir must be installed before start of excavation in the existing dyke or dam. Such a double substituting weir can be a closed wall of sheet piling, supported by soil. The provisions shall be such that the underwater profile of the dredged trench, the water movement caused by ships, etc. cause no slides/ cave-ins of the dyke or dam.

4.0 **CONTINUOUS CONCRETE COATING**

CONTRACTOR shall provide concrete coating over the pipeline including the bends in accordance with the specification issued for the purpose (refer specification no. MEC/S/05/11/03 and approved procedure. CONTRACTOR shall coat the weld joints in order to arrive at a continuously concrete coated pipeline. However this concrete coating shall be applied after the hydrostatic pretest.

5.0 **HYDROSTATIC PRE-TESTING**

CONTRACTOR shall hydrostatically pre-test the pipe string of each water crossing before installation as per approved procedure.

Joint coating of the welds shall be done after this pre-test.

The section of the pipeline corresponding to the major water crossing shall, before installation, be subjected to hydrostatic pre-testing to a combined equivalent stress of 90% of the SMYS of the pipe material.

After the temperature has been stabilised, the pressure shall be maintained in the pipeline for at least twenty four (24) hours and recorded by manothermograph. During the test CONTRACTOR shall check all welds for leakage. Failure, if any, during the test shall be rectified by the CONTRACTOR. If the same is due to failure on account of any cause other than defect in material supplied by COMPANY, the repairs shall be done free of cost, to the satisfaction of COMPANY.

6.0 INSTALLATION

6.1 CONTRACTOR shall submit a detailed scheme for the method he proposes to adopt for installing the pipeline to COMPANY for approval. CONTRACTOR shall calculate all stresses in the pipeline while laying and check whether the stresses remain within permissible limits. A set of all calculations shall be submitted to the COMPANY for approval.

6.2 CONTRACTOR shall perform all work required to install the water crossings, including the possible appurtenances indicated in the drawings. The water crossings shall be installed in such a manner as to comply with the requirements and conditions stated by the Authorities issuing the permits. CONTRACTOR shall pay special attention to minimize any damage to embankments and dykes in the vicinity of water crossings.

6.3 The equipment for launching shall be arranged in such a way that the pipeline is laid without impact or jerking and is not subjected to stresses of any type other than those which are allowable. Minimum allowed radius of curvature shall be followed, particularly at the end of the launching way towards the water in the freely suspended section.

6.4 After the water-crossing section has been installed in place, CONTRACTOR shall fill this section including the pertaining land sections with water for the final testing.

6.5 CONTRACTOR shall check if the position and depth of the water crossing are in accordance with the approved drawings, by means of a profile of the pipeline, before and after the water-crossing section is filled with water. CONTRACTOR shall lower each pipeline section which is not sufficiently deep by dredging or jetting the underlying ground.

6.6 The maximum allowed horizontal deviation from the required center line shall be limited to the following :-
For pipeline dia. upto and including 24" - 300 mm
For pipeline dia greater than 24" - 500 mm

6.7 Prior to backfill the pipeline shall, when laid in the trench, conform to the bottom contour of the trench grade, so that it will be firmly, uniformly and continuously supported. COMPANY may employ a diver or use other suitable methods to inspect the bottom of the trench and/ or after the pipe is installed prior to backfilling of the trench. CONTRACTOR shall facilitate the work of the diver and shall furnish the necessary equipment and helpers (other than actual diving equipment) necessary for the diver/ inspector to perform his work.

6.8 If the pipe does not properly fit the trench or does not rest at sufficient depth to satisfy the minimum requirements of cover as specified in approved drawings, the CONTRACTOR shall make necessary corrections to either trench or the pipe alignment or to both so that the pipe, when finally in position in the trench, shall fully meet the specifications, failing which CONTRACTOR may be asked to remove the pipeline. This shall be done at no extra to the COMPANY.

6.9 **Installation of Parallel Pipelines**

When parallel pipelines are required to be installed for a major water crossing. CONTRACTOR shall further comply with the following requirements.

6.9.1 Depending on the diameters of the parallel pipelines, the characteristics of the crossing and the limitations of CONTRACTOR's equipment, CONTRACTOR may propose installation of the parallel pipelines either together in a combined operation or separately in a common trench.

6.9.2 If the pipelines are installed together, the minimum clear distance between the parallel pipelines (measured from the outside diameters of the concrete coated pipes) shall be 300mm. CONTRACTOR shall provide spacers at sufficient intervals along the length of the pipe section(s), securely fixed to the pipes, or shall propose other suitable alternative methods, so as to ensure that the stipulated minimum clear distance is maintained. The spacers may be removed before the trench is backfilled.

CONTRACTOR shall furnish detailed drawings for the pipe assembly showing the details of spacers/ other arrangements for COMPANY's approval before start of construction.

6.9.3 If the parallel pipelines are installed separately in a common trench, the minimum clear distance between the parallel pipelines in the trench shall be 5000mm. CONTRACTOR shall ensure that this minimum spacing be maintained till the time the trench is backfilled.

7.0 **BACKFILLING AND BANK PROTECTION**

7.1 Backfilling of the water-crossing section shall be performed as described in the following clauses.

7.1.1 The bottom of the waterway shall be reinstated to its original level by backfilling the trench in a manner and with suitable material and as prescribed and approved by the authorities and COMPANY. In case material other than the original spoil is required, this shall be supplied and applied by CONTRACTOR.

Wherever boulders, rock, gravel and other hard object are encountered, they shall not be placed directly on the pipe. Sufficient earth, and or selected and approved backfill material shall be backfilled initially around and over the pipe to provide a protective padding or cushion extending to a minimum thickness of 50 centimeters around the pipe before backfilling remainder of the trench with excavated or other material.

Wherever required by COMPANY, CONTRACTOR shall cover the (nearly) backfilled trench with a layer of rock boulders to be approved by COMPANY over a width equal to the width of the excavated trench with an extra of 5 m on either side at no extra cost to COMPANY.

7.1.2 Backfilling progress of the trench shall be checked continuously, and a daily progress report shall be made and handed over to COMPANY.

7.1.3 All embankments and/ or dykes, bed and banks shall be reinstated to their original state and levels, unless otherwise prescribed in the drawings or by the Competent authorities or COMPANY.

7.1.4 All remaining spoil-deposits shall be cleaned by CONTRACTOR to the satisfaction of COMPANY.

7.2 Bank Protection

7.2.1 Trenches in banks of major water crossings shall be backfilled with soil approved by COMPANY. The fill at the banks shall be tamped firmly and reinforced with sacked earth, rip-rap, or by other means as directed by COMPANY to the satisfaction of authorities having jurisdiction thereof. In areas where the backfilled soil is expected to be of loose type which is prone to flow, the trench shall be backfilled with boulder/ crushed rock of minimum 75mm thickness. The boulder/ crushed rock shall be derived from solid, stable, non-soluble and approved quality store approved by COMPANY and pipe shall be provided with adequate padding of soil of a quality approved by COMPANY. Wherever necessary the boulder/ crushed rock shall be held to the bed by use of 6.1 wire nets of minimum dia. of 3.2mm, made from steel having tensile strength of 400 N/mm^2 and with a minimum elongation at failure of 12%. The minimum zinc coating of 275 gm^{-2} shall be applied on single/ double twisted wire. After the trench has been backfilled and during the clean up works, the water crossing shall be cleaned across the whole width of ROW. The existing bed profile shall be maintained after restorations.

7.2.2 Unless stipulated otherwise by the authorities or by COMPANY, CONTRACTOR shall protect the banks of the major water crossings by using gravel and boulders filled embankment mattresses of galvanized iron wire (of specification as in 7.2.1 above) to be laid over the backfilled, compacted and graded banks. In case slope of the banks is 1:1 or more, bank protection shall be carried out using gabions. Bank protection works shall be carried out by CONTRACTOR in accordance with the drawings included in the CONTRACT. All materials required for such works shall be supplied by CONTRACTOR and all works carried out in accordance with specifications, approved drawings, instructions of COMPANY and to the complete satisfaction of authorities having jurisdiction at no extra cost to COMPANY.

The length of the above protection shall be equal to the actual bank excavation edge including damage and further extending 10 m on either sides, The width of the restoration on the slope shall be determined by the levels :

- 2m above Highest Water Level, (recordable) or upto the top of bank, whichever is higher.
- 5m below Low Water Level (recordable) or upto pipe trench level in the bed.

7.2.3 Before final hydrostatic testing, CONTRACTOR shall `prove' the diameter of the pipeline by passing a gauging (caliper) pig through the pipeline. The gauging pig shall have a diameter equal to 95% of the internal diameter of the pipe.

CONTRACTOR shall supply and install all temporary scraper, launchers. Receivers and other equipment, piping and materials and consumables for the purpose.

8.0 FINAL HYDROSTATIC TEST

The complete water crossing must be tested immediately after the approved backfilling of the trench. The test procedure shall result in a hoop stress in pipe corresponding to 90% SMYS of the pipe material. After temperature stabilisation pressure shall be retained in the pipeline for a minimum of twenty four (24) hours and recorded by manothermograph. The hydrostatic testing shall be carried out in accordance with approved procedures.

9.0 POST-CONSTRUCTION SURVEY

After laying of the pipeline, CONTRACTOR shall carry out a post-construction survey jointly with COMPANY. Any defects brought to the notice of CONTRACTOR shall be promptly corrected by CONTRACTOR at his own expense to the complete satisfaction of COMPANY.

10.0 FINAL CLEAN-UP

After completion of construction, CONTRACTOR shall clear the site of all balance material and debris. All balance pipe lengths, in case supplied by COMPANY, shall be returned to COMPANY's designated stock yard(s). Site shall be cleared to the complete satisfaction of COMPANY and authorities having jurisdiction. All such works shall be done at no extra cost to COMPANY.

11.0 DOCUMENTATION

11.1 In addition to the documents specified elsewhere in this specification. CONTRACTOR shall submit to the COMPANY six copies of each of the following documents / records.

- Complete record of pipes `taken-over' from COMPANY, number of pipe lengths used, and record of return of balance pipe lengths to COMPANY's designated stock-yard(s).
- Copies of the permits obtained from authorities having jurisdiction for the various works.
- Records of Non-destructive testing of welds.
- Clearance certificates from the land owners and authorities having jurisdiction regarding satisfactory clean-up and restoration of pipeline ROU and work areas.

11.2 After completion of construction CONTRACTOR shall prepare & furnish six sets of copies and two sets of reproducible of As-built drawing for the crossings.

As-built drawings shall be as a minimum, include the following information.

- True profile of the bed and banks of the water crossing along the pipeline after backfilling.
- True profile of the pipeline as installed and the top of cover to top of pipe at regular intervals.
- Location and angle of sag and over bends.
- Extent of backfill.
- Extent of bank protection.

11.3 All documents shall be in English Language

Rev. : 0
Edition : 1

SPECIFICATION
FOR
PIPELINES CROSSING ROADS, RAILROADS, MINOR WATER AND OTHER CROSSINGS

SPECIFICATION NO.: MEC/S/05/21/05

(OIL & GAS SBU)
MECON LIMITED
DELHI 110 092

MECON LIMITED REGD. OFF: RANCHI 834002	STANDARD TECHNICAL SPECIFICATION OIL & GAS SBU, DELHI		
TITLE	PIPELINES CROSSING ROADS, RAILROADS, MINOR WATER AND OTHER CROSSINGS	DOCUMENT NO. MEC/S/05/21/05	Page 1 of 1 REVISION : 0 EDITION : 1

CONTENTS

SL.NO.	DESCRIPTION
1.0	SCOPE
2.0	REFERENCE CODES, STANDARDS AND SPECIFICATIONS
3.0	GENERAL
4.0	ROAD AND RAIL-ROAD CROSSINGS
5.0	CROSSINGS OF BURIED SERVICES
6.0	MINOR WATER COURSE CROSSINGS

PREPARED BY:	CHECKED BY:	APPROVED BY:	ISSUE DATE :
(Shalini Singh)	(Sunil Kumar)	(A.K. Johri)	Nov. 2008

1.0 **SCOPE**

1.1 This specification covers the minimum requirement for the various activities to be carried out by the CONTRACTOR for or about the installation of pipelines crossing roads, railroads, minor water courses and other services.

The provisions of this specification are not applicable for pipelines crossing water courses, which are specifically designated as "Major Water Courses" in the CONTRACT.

1.2 This specification shall be road in conjunction with the conditions of all specifications and documents included in the CONTRACT between COMPANY and CONTRACTOR.

For the purpose of this specification the following definitions shall hold :

- the words "Shall" and "Must" are mandatory
- the words "Should, "May" and "Will" are non-mandatory, advisory recommended.

2.0 **REFERENCE CODES, STANDARDS AND SPECIFICATIONS**

2.1 Reference has been made in this specification to the latest edition (edition enforce at the time of floating the enquiry) of the following codes, standards and specifications.

a) ASME B 31.4 - Pipeline Transportation Systems for Liquid Hydrocarbons and Other Liquids.

b) ASME B 31.8 - Gas Transmission and Distribution Piping Pipelines Crossing Railroads and Highways.

c) API RP 102 - Recommended practice for Liquid Petroleum Pipelines Crossings Railroads and Highways.

d) OISD 226 - Natural Gas Transmission Pipelines and City Gas Distribution Networks

e) Part 192, Title 49 - Transportation of Natural and Other Gases by Pipeline.

f) Part 195 - Transportation of liquids by Pipeline.

2.2 In case of conflict between the requirements of above mentioned codes, standards, specifications and practices, the most stringent requirement shall govern.

3.0 **GENERAL**

3.1 Crossing of roads, railroads, buried services, canals and minor water courses with equipment and/ or personnel is allowed only after acquiring approval from the

authorities having jurisdiction and after making arrangements for safeguarding the roads, etc. and the buried services with appropriate provisions.

Highways, main-roads and railroads and their verges and banks of water crossings are not allowed to be used for loading, unloading or stacking of materials and/ or equipment. For secondary roads, such loading/ unloading is permitted only after prior approval from the concerned authorities CONTRACTOR is not allowed to close or divert roads or water courses without prior approval from the COMPANY and the concerned authorities. CONTRACTOR shall never unnecesarilly hamper the users of the roads, railroads, buried services and/ or water courses. The water flow shall not be obstructed in any way.

3.2 COMPANY reserves the right to demand for individual crossings from the CONTRACTOR a separate detailed report for approval, containing :

- Time schedule
- Working method with equipment
- Test procedure
- Manpower deployment
- Calculations of temporary works
- Soil investigations, etc.
- Approval letter from Competent Authority.

Such works shall be without any extra cost to COMPANY.

3.3 Pipeline crossings for road, railroad, canals and rivers etc., shall be hydrostatically pretested ex-situ, prior to joint coating, whenever,

- Crossing is executed by boring ;
- Crossing is installed in casing pipe;
- River crossing pipes which are to be continuously concrete weight coated (to be tested prior to concrete coating);
- Whenever, in COMPANY's opinion, the repair of pipeline at crossing, in case of a leak during final hydrostatic testing, would require inordinate amount of effort and/ or time;
- Whenever pretesting is insisted upon by the Authorities having jurisdication over the utility crossed.

The section of the pipeline for the crossings shall be tested as a single string. Unless specified otherwise in the CONTRACT, the test pressure shall be the one resulting in a hoop stress corresponding to 90% of SMYS of pipe material. Test pressure shall be retained in the pipeline for minimum period of 4 hours. Test section shall be visually examined for leaks/ defects, etc.

4.0 ROAD AND RAILROAD CROSSINGS

4.1 The work under crossings shall include necessary clearing, grading and trenching to required depths and widths, welding of casing (when required) and carrier pipes, coating, lowering-in, backfilling, clean-up, restoration to the original condition and further strengthening and protective works, testing, installation of assemblies, insulators and seals, and temporary works such as sheet pilling, bridges, etc.

The work shall be carried out in accordance with the approved drawings and job standards, as directed by COMPANY and to the satisfaction of COMPANY and the authorities having jurisdication over th facility crossed. The work carried out for road and railroad crossings shall meet the minimum requirements of API RP 1102, latest edition.

Before the installation work of crossings is started, the CONTRACTOR shall provide suitable barricades, temporary bridge/ bypass work (especially where roads are open-cut) with railing, if required by COMPANY for safety of traffic. Adequate traffic warning signals and/ or traffic lights and suitable diversions shall be provided as directed by COMPANY/ Authority having jurisdication over these areas. Such diversions shall not cross the pipeline where it has already been installed, unless proper safeguarding in COMPANY's opinion is ensured.

Prior approval from the statutory authorities shall be obtained to lay the pipeline across highways/ roads either by boring or by open-cut method. Installation of the crossing shall be by the method (i.e., boring/ open-cut) approved by Authorities having jurisdiction. Railroad crossings shall always be bored/ jacked.

4.2 Boring/ jacking of carrier pipes for crossings is allowed only if the pipes for boring/ jacking are provided with a suitable corrosion coating and CONTRACTOR remains liable for the suitablity of the pipe and weld-coating of carrier pipes to be bored and for which coating and method of application are anyhow to be authorised by COMPANY without prejudice to CONTRACTOR's liability. In all other cases the carrier pipes shall be cased.

Before start of the boring/ jacking CONTRACTOR shall execute a soil investigation and determine the ground water table. Based on these investigations CONTRACTOR shall prepare a construction drawing and submit to COMPANY for approval including time schedule and soil investigation report. The CONTRACTOR shall submit for approval of COMPANY the method of boring / trenchless to be carried out, depending on the nature of soil conditions, nature of crossing, local requirements etc.

During the execution of boring the ground water table over the length of the boring shall be lowered up to atleast 0.50 M below bottom of the pipeline. This water table is to be regularly inspected and maintained by CONTRACTOR and reported to COMPANY. To safeguard the stability of the borepit, CONTRACTOR shall, if necessary in COMPANY's opinion, use a closed sheetpiling which shall extend atleast over 50% of the length in undisturbed soil. The length of the boring shall be in accordance with

the length of the ROW of the crossing (road, railroad, etc.) with minimum 0.6 m extra on either side.

If the soil conditions and groundwater for a particular boring give reasons for this, CONTRACTOR is entitled to suggest to COMPANY for a relaxation of one or more of the following requirements as defined hereforth :

- Soil investigation
- Lowering of groundwater table
- Sheetpiling
- Length of boring etc.

In approaches to the crossing, CONTRACTOR shall eliminate unnecessary bending of pipe by conforming to the contour of the ground by gradually deepening the ditch at such approaches as directed by the COMPANY.

4.3 The bottom of the trench and/ or the pit for at least twelve (12) metres at the approach to each end of a casing shall be graded and if necessary backfilled with clean sand and compacted upto atleast 95% Proctor density to an elevation that will provide sufficient and continuous support to the pipeline so that the pipeline remains correctly aligned at the casing ends during and after backfilling.

4.4 The diameter of the hole for a bored section shall have a hole diameter as close as practicable to the outside diameter of the carrier or casing pipe. If excessive void or too large hole results, or if it is necessary, in the opinion of COMPANY, to abandon the bored hole, prompt remedial measures such as filling the hole with suitable material shall be taken to the entire satisfaction of the COMPANY and Authorities having jurisdication thereof at no extra cost to COMPANY. Equipment used for installation of casing pipe shall be of the type approved by COMPANY.

An installation consisting of hydraulic jacks shall be provided with easily readable pressure gauges (in bar) and sealable pressure limits. Their proper operation shall be demonstrated before the work is started. COMPANY can request that the maximum pressing force be limited.

At the front of the pipe there may be a cutting ring which may be 12mm larger than the outside diameter for the pipe or casing. A lubricating pipe can also be used in jacking, the nipples of which shall not protrude from the cutting edge. Said lubricating pipe shall not be fixed to the pipe casing. When jacking, only biologically degradable lubricants shall be used (e.g. WRC Medlube or an emulsion of bentonite).

Removal of soil from the pipeline during jacking shall be done mechanically by means of a standard, locked auger, which has to be safeguarded against jacking ahead of the pipe.

During jacking the progress of the pipe to be jacked and the cutting capacity of the auger shall be mutually adjusted, by regulating the speed of the auger, to prevent the road from bulging (rpm too low) or cave-ins (rpm too high). In any case no more soil

shall be removed than the volume of the pipe. The auger drive shall be provided with a clutch.

The progress in the work, the readings of the gauge pipes, the jacking pressures observed, etc., shall be recorded in a log book, to be shown to COMPANY upon request. All information shall be supplied to COMPANY on completion of the work.

If the jacking fails, the casing shall not be withdrawn. It shall be filled with sand and plugged at either end. The diameter of the casing pipe shall conform to API RP 1102 recommendations or as directed by the Engineer – in - charge.

COMPANY reserves the right to inspect certain lengths of pipes to assess damages, if any, to the corrosion coating of the carrier pipe used for boring. CONTRACTOR shall weld additional lengths of pipe and pull the required extra lengths of COMPANY's inspection. If during inspection any defects are noticed, CONTRACTOR, in consultation with COMPANY, shall carry out the remedial measures required.

4.5 While welding of the casing and vent/ drain pipes, internal high or low is not allowed. Welding of casing and vent/ drain pipes need not be radiographed, however, only normal visual checks shall be carried out. Before welding, the single length of pipe shall be inspected in order to check that there is no out of roundness and dents. When such defects are noticed, these must be completely removed before joining the pipes. If these defects cannot be repaired, the defective section shall be cut out.

4.6 In the case of crossing where excavation has been authorised, the welding for the casing pipe and for a continuous sectio of the pipeline corresponding to the expected length shall be carried out in the proximity of the crossing. Casing must be laid immediately after the trenching. Casing pipe must be laid with a single gradient in order to allow for an easy insertion and, if necessary at a future date, to allow for the removal or replacement of the pipeline, leaving the casing undisturbed.

4.7 The assembly of vent pipe units as approved by COMPANY shall be carried out by direct insertion and welding to the ends of the casing pipe before introducing the carrier pipe. The operation of assembling and extending the vent pipe shall be carried out in such a way that there is no contact with the carrier pipe. The painting/ coating of the vent pipes shall be applied before backfilling as per relevant specifications.

4.8 The casing pipe shall be considered ready for installation of the carrier pipe, after careful inspection and internal cleaning with the removal of soil, mud, stones and other foreign materials.

4.9 Insulators, as approved by COMPANY, shall be securely fastened to the pipe with all bolts and fixtures firmly tightened. The number of insulators and spacing shall be as shown in the drawings or at 2.5m intervals (whichever is more stringent). At the end of both sides of the casing, a double set of insulators shall be installed.

4.10 Care must be taken in pushing or pulling carrier pipe into the casing so that the pipe is aligned correctly in the casing and that the pushing or pulling force is evenly and

constantly applied to avoid damages to the insulators. A nose piece having a diameter equal to that of the pipe shall be welded on the front and back end of the carrier pipe to facilitate installation of the carrier pipe properly in the casing and to keep it dry and clean.

4.11 After installation of the carrier pipe section, the casing and the appurtenances, but prior to making tie-in welds and backfilling, an electrical test shall be conducted by the CONTRACTOR in the presence of the COMPANY, to determine the resistance between the casing and the carrier pipe or the carrier pipe and the soil. These tests shall show at least a resistance of 100 kohm/m^2. After backfilling and compaction, additional tests shall be conducted to determine if the casing is electrically shorted to the pipe. If the installation is found to be shorted, CONTRACTOR shall make the necessary corrections and repairs at his cost, until a test to the satisfaction of the COMPANY is obtained.

5.0 CROSSINGS OF BURIED SERVICES

5.1 The pipeline under construction may pass above or below the existing buried facilities such as pipelines, cables, etc. Type of crossing shall be such that a minimum depth of cover as required in the drawings and specifications are guaranteed. The minimum clearance required between pipeline and the existing facility shall be 500mm.

5.2 Whenever buried services in the ROW are to be crossed by CONTRACTOR, he shall safeguard the buried facilities and the required precautions shall be taken as approved by Owner of the buried services and by COMPANY.

5.3 For buried services to be crossed by boring/ jacking, the relevant provisions of Section 3.0 shall apply.

6.0 MINOR WATER COURSE CROSSINGS

6.1 Minor water crossings are crossings of ditches, canals, water courses, rivers, streams etc, whether the bed(s) contain(s) water or not, and not being specified as `Major Water Crossings' in the CONTRACT.

6.2 For minor water crossings a standard drawing or a separate detailed approved drawing for individual crossing shall be applicable, and all further specifications are applicable.

6.3 Whenever minor water crossings in the ROW are to be crossed, CONTRACTOR shall install/ temporary bridges to facilitate movement.

6.4 In crossings of water courses with either moderate flow rate or of torrential nature with marked and unpredictable flooding, an adequate survey shall be carried out before starting the work with the object of determining what precautions are necessary and the most favourable period for executing the work.

6.5 In case of crossings of water courses for which no special methods of laying are required, a pipe section of a size as per the the approved drawings shall be assembled and subsequently laid. Bends shall be of cold field type.

Whenever required by COMPANY, CONTRACTOR shall, before start of construction, execute a soil investigation. Based on this soil investigation he shall prepare construction drawings, work method and time schedule for approval of COMPANY as well as concerned local agencies.

The depth of the existing bottom of a minor water course crossing shall be determined in relation to the adjacent stable ground level by taking the average of four measurements. Measurement shall be taken with a gauge and with dimensions 60 x 60mm and having a flat bottom. The minimum force to be exerted shall be 360 N (36 kgf).

CONTRACTOR shall take special care to check with the responsible authorities for special conditions applying to working on, over, under or through minor water crossings and CONTRACTOR shall comply with any such conditions. Written arrangements with authorities shall be drawn up in cooperation with COMPANY.

6.7 For crossings beneath the bed of water courses, the pipe section shal be made in such a way that it conforms to the existing or future bed as indicated in the approved drawings. In crossings for which an individual drawing has not been prepared, the minimum cover of the pipeline shall not be less than that indicated in the standard drawings for a similar type of crossing.

6.8 Whenever the crossing requries a straight section of pipe between the lower bends coinciding with the river bed, this section shall be laid at a single horizontal level.

6.9 For crossings of ditches, canals, banked channels, etc. by boring, the pipe section shall be prepared, laid and tested in accordance with the applicable clauses of Section 3.0 of this specification.

6.10 The CONTRACTOR shall arrange temporary installation of diversions as may be necessary, to ensure the effective functioning of these water courses crossed, to the entire satisfaction of the concerned Local Authorities as well as the COMPANY.

6.11 Banks and trenches of minor water crossings shall be backfilled with soil which is to be approved by COMPANY and shall be thoroughly compacted to prevent soil and bank erosion as per the drawings and standards to the satisfaction of authorities having jurisdication thereof and the COMPANY. Whenever boulders, rock, gravel and other hard objects are encountered, they shall not be placed directly on the pipe. Sufficient earth, sand or selected and approved backfill material shall be backfilled initially around and over the pipe to provide a protective padding or cushion extending to a minimum thickness of 30 centimeters around the pipe before backfilling remainder of the trench with excavated or other material as per approved drawings and standards.

After the trench has been backfilled and during the clean up works, the minor water crossing shall be cleaned at least across the whole of the ROW.

When directed by the COMPANY, CONTRACTOR shall stabilise and restore the bank of the water crossings with materials to be supplied by him as follows.

The excavation shall be trimmed in steps-and-berms backfilled with well compacted solid soil, followed by a minimum 0.25m thick layer of properly shaped boulders (75-150mm) encased in a net of galvanised iron wire of dia 3mm spaced at a maximum distance of 50mm to be laid over the backfilled, compacted and graded banks.

The GI wire shall be made from steel having tensile strength of 400 N/mm^2 and with a minimum elongation at failure of 10%. The minimum zinc coating of 200 gm^{-2} shall be applied on single/ double twisted wire.

The length of the above protection shall be equal to the actual bank excavation edge including damage and extending 2m on either sides. The width of this protection on the slope shall be determined by the following :

- 2m plus the highest water level (recoverable) or upto the top of bank whichever is higher.
- Upto the bottom of the crossing or 20m below the highest water level whichever is smaller.

Bank stabilisation for certain minor water crossings shall be determined by COMPANY based on nature of crossing e.g. type of river, canal, major nallah, flood control banks and other water bodies; type of soil, regulations of local authorities; and any other socio-economic consideration evaluated by the COMPANY.

6.12 The crossing of any embankments shall be carried out strictly in accordance with approved drawings.

No drilling work on embankments shall be permitted without prior written approval from the competent authorities.

Rev. : 0
Edition : 1

SPECIFICATION
FOR
PIPING FABRICATION AND ERECTION

SPECIFICATION NO.: MEC/S/05/21/06

(OIL & GAS SBU)
MECON LIMITED
DELHI 110 092

MECON LIMITED REGD. OFF: RANCHI 834002	STANDARD TECHNICAL SPECIFICATION OIL & GAS SBU, DELHI		
TITLE	PIPING FABRICATION AND ERECTION	DOCUMENT NO. MEC/S/05/21/06	Page 1 of 1 REVISION : 0 EDITION : 1

CONTENTS

SL.NO.	DESCRIPTION
1.0	GENERAL
2.0	SCOPE
3.0	BASIS FOR WORK
4.0	FABRICATION
5.0	ERECTION
6.0	WELDING
7.0	ERECTION
8.0	INSPECTION
9.0	PROTECTIVE COATING
10.0	FLUSHING
11.0	HYDROSTATIC TESTING

ANNEXURE-1 - WELDING SPECIFICATION

EXHIBIT-A - ELECTRODE QUALIFICATIONS TEST RECORD
EXHIBIT-B - STRESS RELIEF HEAT TREATMENT PROCEDURE SPECIFICATION
EXHIBIT-C - STANDARD PROCEDURE SPECIFICATION NO.
EXHIBIT-D - COUPON TEST RECORD
EXHIBIT-E - WELDER's IDENTIFICATION CARD
EXHIBIT-F - RADIOGRAPHIC PROCEDURE FOR PIPE WELDING
EXHIBIT-G - WELDING SPECIFICATION CHART

ANNEXURE-2 - DESTRUCTIVE TESTING OF WELDED JOINT - BUTT WELDS

ANNEXURE-3 - ULTRASONIC INSPECTION

ANNEXURE-4 - RADIOGRAPHY

PREPARED BY:	CHECKED BY:	APPROVED BY:	ISSUE DATE :
(Shalini Singh)	(Sunil Kumar)	(A.K. Johri)	Dec. 2008

1.0 GENERAL

This specification covers general requirements of fabrication and erection of aboveground and trench piping systems at site. The specification covers the scope of work of contractor, basis of work to be carried out by contractor and standards, specifications and normal practice to be followed during fabrication and erection by the contractor.

2.0 SCOPE

Generally the scope of work of contractor shall include the following :

2.1 Transportation of required piping materials, pipe support and all other necessary piping materials from Owner's storage point or contractor's storage point (in case of contractor's scope of supply) to work site / shop including raising store requisitions for issue of materials in the prescribed format & maintaining an account of the materials received from Owner's stores.

2.1.1 Piping materials include the following but not limited to the same.

a. Pipes (All sizes and schedule)

b. Flanges (All sizes, types & Pressure ratings).

c. Fittings (All sizes, types and schedule)

d. Valves (All sizes, types and Ratings)

e. Gaskets (All sizes, types & Ratings)

f. Bolts, Nuts or M/C Bolts (All types)

g. Expansion Joint / Bellows (All types)

h. Specialty items like online filters, ejectors, sample coolers, steam traps, strainers, air traps etc.

i. Online instruments like control valve, orifice flange, rotameter, safety valves etc.

2.2 Shop & field fabrication and erection of piping in accordance with documents listed under Cl. 3.0 i.e. 'BASIS OF WORK' including erection of all piping materials enumerated above.

2.3 Fabrication and erection of pipe supports like shoe, saddle, guide, stops, anchors, clips, cradles, hangers, turn buckles, supporting fixtures, bracket cantilevers, struts, teeposts including erection of spring supports and sway braces.

2.4 Fabrication

2.4.1 Fabrication of piping specials like special radius bends, reducers, mitres etc.

2.4.2 Fabrication of plain and threaded nipples from pipes as required during erection.

2.4.3 Fabrication of swage nipples as and when required.

2.4.4 Fabrication of odd angle elbow like 60°, 30° or any other angle from 90/45° elbows as and when required.

2.4.5 Fabrication of flange, reducing flange, blind flange, spectacle blinds as and when required.

2.4.6 Fabrication of stub-in connection with or without reinforcement.

2.4.7 Grinding of edges of pipes, fittings, flanges etc. to match mating edges of uneven / different thickness wherever required.

2.5 Modifications like providing additional cleats, extension of stem of valve, locking arrangement of valves etc. as and when required.

2.6 Preparation of Isometrics, bill of materials, supporting details of all NON-IBR lines upto 2-1/2" within the unit battery limit and get subsequent approval from Engineer-in-Charge as and when called for.

2.7 Obtaining approval for drawings prepared by contractor from statutory authority, if required.

2.8 Spun concrete lining of the inside of pipes 3" NB & above including fittings and flanges as required in accordance with specification.

2.9 Rubber lining inside pipes, fittings, flanges as and when required, in accordance with specification.

2.10 Radiography, stress relieving, dye penetration, magnetic particle test etc. as required in specification.

2.11 Performing PMI using alloy analysers as per 'Standard Specification for Positive Material Identification at Construction Sites, 6-82-0002'.

2.12 Casting of concrete pedestals and fabrication & erection of small structures for pipe supports including supply of necessary materials.

2.13 Providing insert plates from concrete structures and repair of platform gratings around pipe openings.

2.14 Making material reconciliation statement and return of Owner's supply left over materials to Owner's storage.

2.15 Flushing and testing of all piping systems as per standard specification for inspection, flushing and testing of piping systems (Specification No. MEC/S/05/21/11).

3.0 BASIS FOR WORK

3.1 The complete piping work shall be carried out in accordance with the following

3.1.1 "Approved for Construction" drawings and sketches issued by MECON to the Contractor - Plans and/or Isometrics.

3.1.2 "Approved for Construction" drawings and sketches issued by Turn-key bidders to the Contractor - Plans and/or Isometrics.

3.1.3 Approved Process licensor's standards and specifications.

3.1.4 Drawings, sketches and documents prepared by contractor duly approved by Engineer-in-Charge' (such as isometrics and offsite piping etc.)

3.1.5 Approved construction job procedures prepared by Contractor as stipulated in 2.16

3.1.6 MECON specifications/documents as below :

a. Process and Instrument Diagram.

b. Piping Materials Specification

c. Piping support standards.

d. Line list / Number

e. Piping support index.

f. Standard specification of NDT Requirement of Piping

g. Welding specification charts for piping classes.

h. Standard specification for Pressure Testing of Erected Piping System.

i. Welding specification for fabrication of piping

j. Any other MECON or OTHER specifications attached with Piping Material Specification or special condition of contract.

k. Procedure for storage, preservation and positive identification of materials Contractors works / stores.

3.1.7 Following codes, standards and regulations

a. ASME B 31.3 : Process Piping
b. ASME Sec. VIII : Code for unfired pressure vessel.
c. IBR Regulations

d.	IS:823	:	Code for procedure for Manual Metal Are Welding of Mild Steel (for structural steel).
e.	NACE Std.	:	Code for Sour Services material requirements MR.

Note : All codes referred shall be latest edition.

3.2 Deviations

Where a deviation from the "Basis of Work" and approved job procedure described above is required or where the basis of work does not cover a particular situation, the matter shall be brought to the notice of Engineer - in - Charge and the work carried out only after obtaining written approval from him in each case.

4.0 FABRICATION

4.1 Piping Material

Pipe, pipe fittings, flanges, valves, gaskets, studs bolts etc. used in a given piping system shall be strictly as per the "Piping Material Specification" for the "Pipe Class" specified for that system. To ensure the above requirement, all piping material supplied by the Owner / Contractor shall have proper identification marks as per relevant standards / MECON's specifications / Licensors specification. Contractor shall provide identification marks on left over pipe lengths wherever marked up pipe lengths have been fabricated / erected. Material traceability is to be maintained for AS., S.S., NACE, LTCS, material for Hydrogen service and other exotic materials by way of transferring heat number, etc. (hard punching) as per approved procedure. This shall be in addition to colour coding for all piping materials to avoid mix-up.

4.2 Fabrication

4.2.1 All fabrication shall be carried out in accordance with piping general arrangement drawings, (prepared by CONTRACTOR and approved by COMPANY) including this specification and codes as specified in section 2.0.

4.2.2 CONTRACTOR shall be responsible for working to the exact dimensions as per the approved drawings. Dimensional tolerances to be adopted during implementation of fabrication work shall be as per attached sketch "TOLERANCES FOR FABRICATION".

4.2.3 Flange bolt holes shall generally straddle the established centre lines unless other orientation is required and as called out in approved drawings.

4.2.4 Threading shall be NPT to ANSI B 1.20.1. Threading shall preferably be done after bending, forging or heat treatment operation. However if it is not possible, precaution shall be taken to protect threading against deformation. Thread shall be clean cut with no burrs or stripping. Dies shall be new, sharp and properly designed for piping material. Ends shall be reamed to remove burrs.

4.2.5 All threaded joints shall be aligned properly. The pipe entering unions shall be true to centrelines so as to avoid forcing of union coupling during make up. Damaged threads shall be cut from the end of run and the pipe shall be rethreaded.

4.2.6 Immediately before testing the piping, all threads of pipe and fittings shall be thoroughly cleared of cuttings, fuel oil or other foreign matter. The male threads shall be sealed with thread sealant and the piping made up sufficiently for the thread to seize. Sealant shall be teflon tape.

4.2.7 Seal welding of threaded connections when specified shall include the first block valve, cover all threads. The joint shall be cleaned of all cutting oil and other foreign material and made up dry to full thread engagement. Instrument threaded connections which are frequently subjected to testing and maintenance shall not be seal welded.

4.2.8 All threaded connections shall be protected from rusting by applying greases or oil when in operating condition.

4.2.9 When socket weld fittings or valves are used, pipe shall be spaced approximately 1/16" to avoid bottoming which could result in excessive weld stress.

4.2.10 Where the ends of the piping components being welded have an internal surface misalignment exceeding 1.6mm, the wall of the component extending internally shall be trimmed by machining so that the adjoining internal surface will approximately flush.

For the purpose of common understanding the construction job procedure, to be submitted by the contractor, shall include proposal for

- Maximizing prefabrication, inspection and testing at fabrication shop with minimum field joints.
- Positive material identification, handling, storage & preservation.

4.3 Dimensional Tolerances

Dimensional tolerances for piping fabrication shall be as per MECON Standard Specification. The Contractor shall be responsible for working to the dimensions shown on the drawings. However, the Contractor shall bear in mind that there may be variations between the dimensions shown in the drawing and those actually existing at site due to minor variations in the location of equipments, inserts, structures etc. To take care of these variations "Field Welds" shall be provided during piping fabrication. An extra pipe length of 100 mm over and above the dimensions indicated in the drawing may be left on one side of the pipe at each of the field welds. During erection, the pipe end with extra length at each field weld, shall be cut to obtain the actual dimension occurring at site. Isometrics, if supplied may have the field welds marked on them. However, it is the responsibility of the Contractor to provide adequate number of field welds. In any case no extra claims will be entertained from the Contractor on this account. Wherever errors / omissions occur in drawings and Bills of Materials it shall be the Contractor's responsibility to notify the Engineer-in-Charge prior to fabrication or erection.

4.4 IBR Piping

4.4.1 Contractor shall be supplied generally with all drawings for steam piping falling under the purview of Indian Boiler Regulations duly approved by Boiler Inspectorate. The Contractor shall carry out the fabrications, erection and testing of this piping as per requirements of Indian Boiler Regulations and to the entire satisfaction of the local Boiler Inspector. The Contractor shall also get the approval of IBR inspector for all fabrication and testing done by him at his own cost. All certificates of approval shall be in proper IBR forms. . .

4.4.2 Approval of boiler inspector on the drawings prepared by the contractor shall be obtained by the contractor at his own cost.

4.5 Pipe Joints

The piping class of each line specifies the type of pipe joints to be adopted. In general, joining of lines 2" and above in process and utility piping shall be accomplished by butt welds. Joining of lines 1-1/2" and below shall be by socket welding / butt welding / threaded joints as specified in "Piping Material Specifications". However, in piping 1-1/2" and below where socket welding/ threaded joints are specified butt - welds may be used with the approval of Engineer-in-Charge for pipe to pipe joining in long runs of piping. This is only applicable for non-galvanized piping without lining.

Flange joints shall be used at connections to Vessels, Equipment's, Valves and where required for ease of erection and maintenance as indicated in drawings.

4.6 Butt Welded and Socket Welded Piping

End preparation, alignment and fit-up of pipe pieces to be welded, welding, pre-heat, post-heating and heat treatment shall be as described in the welding specification and NDT specification.

4.7 Screwed Piping

In general, Galvanized piping shall have threads as per IS:554 or ANSI B 2.1 NPT as required to match threads on fittings, valves etc. All other piping shall have threads as per ANSI B 2.1, tapered unless specified otherwise.

Threads shall be clean cut, without any burrs or stripping and the ends shall be reamed. Threading of pipes shall be done preferably after bending, forging or heat treating operations. If this is not possible, threads shall be gauge checked and chased after welding heat treatment etc.

During assembly of threaded joints, all threads of pipes and fittings shall be thoroughly cleaned of cuttings, dirt, oil or any other foreign matter. The male threads shall be coated with thread sealant and the joint tightened sufficiently for the threads to seize and give a leakproof joint.

Threaded joints to be seal-welded shall be cleaned of all foreign matter, including sealant and made up to full thread engagement before seal welding.

4.8 Flange Connections

All flange facings shall be true and perpendicular to the axis of pipe to which they are attached. Flanged bolt holes shall straddle the normal centerlines unless different orientation is shown in the drawing.

Wherever a spectacle blind is to be provided, drilling and tapping for the jack screws in the flange, shall be done before welding it to the pipe.

4.9 Branch Connections

Branch connections shall be as indicated in the piping material specifications. For end preparation, alignment, spacing, fit-up and welding of branch connections refer welding specifications. Templates shall be used wherever required to ensure accurate cutting and proper fit-up.

For all branch connections accomplished either by pipe to pipe connections or by using forged tees the rates quoted for piping shall be inclusive of this work.

Reinforcement pads shall be provided wherever indicated in drawings/ specifications etc.

4.10 Bending

Bending shall be as per ASME B31.3 except that corrugated or creased bends shall not be used.

Cold bends for lines 1-1/2" and below, with a bend radius of 5 times the nominal diameter shall be used as required in place of elbows wherever allowed by piping specifications. Bending of pipes 2" and above may be required in some cases like that for headers around heaters, reactors etc.

The completed bend shall have a smooth surface, free from cracks, buckles, wrinkles, bulges, flat spots and other serious defects. They shall be true to dimensions. The flattening of a bend, as measured by the difference between the maximum and minimum diameters at any cross-section, shall not exceed 8% and 3% of the nominal outside diameter, for internal and external pressure respectively.

4.11 Forging and forming

Forging and forming of small bore fittings, like reducing nipples for piping 1-1/2" and below, shall be as per ASME B 31.3.

4.12 Mitre Bends and Fabricated Reducers

The specific application of welded mitre bends and fabrication reducers shall be governed by the Piping Material Specifications. Generally all 90 deg. mitres shall be 4-piece 3-weld type and 45 deg. mitres shall be 3-piece 2-weld type as per MECON Standard unless otherwise specified. Reducers shall be fabricated as per directions of Engineer-in-Charge. The radiographic requirements shall be as per Material Specifications for process and utility systems and NDT Specification for steam piping under IBR, radiographic requirements of IBR shall be complied with.

4.13 Cutting and Trimming of Standard Fittings & Pipes

Components like pipes, elbows, couplings, half-couplings etc. shall be cut / trimmed / edge prepared wherever required to meet fabrication and erection requirements, as per drawings and instructions of Engineer-in-Charge. Nipples as required shall be prepared from straight length piping.

4.14 Galvanised Piping

Galvanised carbon steel piping shall be completely cold worked, so as not to damage galvanised surfaces. This piping involves only threaded joints and additional external threading on pipes may be required to be done as per requirement.

4.15 Jacketed Piping

The Jacketing shall be done in accordance with MECON Specification or Licensors specification as suggested in material specification or special condition of contract.

Pre-assembly of jacketed elements to the maximum extent possible shall be accomplished at shop by Contractor. Position of jumpover and nozzles on the jacket pipes, fittings etc. shall be marked according to pipe disposition and those shall be prefabricated to avoid damaging of inner pipe and obstruction of jacket space. However, valves, flow glasses, in line instruments or even fittings shall be supplied as jacketed.

4.16 Shop Fabrication / Prefabrication

The purpose of shop fabrication or pre-fabrication is to minimise work during erection to the extent possible. Piping spool, after fabrication, shall be stacked with proper identification marks, so as facilitate their withdrawal at any time during erection. During this period all flange (gasket contact faces) and threads shall be adequately fabricated by coating with a removable rust preventive. Care shall also be taken to avoid any physical damage to flange faces and threads.

4.17 Miscellaneous

4.17.1 Contractor shall fabricate miscellaneous elements like flash pot, seal pot, sample cooler, supporting elements like turn buckles, extension of spindles and interlocking arrangement of valves, operating platforms as required by Engineer-in-Charge.

4.17.2 Spun Concrete Lining

The work of inside spun concrete lining of pipes and specials of diameter 3" and above shall be done as per material specifications and special condition contract.

4.17.3 Fabrication of pipes from plate

Pipes shall be fabricated at site as and when required as per the specifications attached and the actual Piping Material Specification.

5.0 ERECTION

5.1 Cleaning of Piping before Erection

Before erection all pre-fabricated spool pieces, pipes, fittings etc. shall be cleaned inside and outside by suitable means. The cleaning process shall include removal of all foreign matter such as scale, sand, weld spatter chips etc. by wire brushes, cleaning tools etc. and blowing with compressed air/or flushing out with water. Special cleaning requirements for some services, if any shall be as specified in the piping material specification or isometric or line list. S.S jacketed piping requiring pickling shall be pickled to remove oxidation and discolouring due to welding.

5.2 Piping Routing

No deviations from the piping route indicated in drawings shall be permitted without the consent of Engineer- in-Charge.

Pipe to pipe, pipe to structure / equipments distances / clearances as shown in the drawings shall be strictly followed as these clearances may be required for the free expansion of piping / equipment. No deviations from these clearances shall be permissible without the approval of Engineer-in-Charge.

In case of fouling of a line with other piping, structure, equipment etc. the matter shall be brought to the notice of Engineer-in-Charge and corrective action shall be taken as per his instructions.

5.3 Cold Pull

Wherever cold pull is specified, the Contractor shall maintain the necessary gap, as indicated in the drawing. Confirmation in writing shall be obtained by the Contractor from the Engineer-in-Charge, certifying that the gap between the pipes is as indicated in the drawing, before drawing the cold pull. Stress relieving shall be performed before removing the gadgets for cold pulling.

5.4 Slopes

Slopes specified for various lines in the drawings / P&ID shall be maintained by the Contractor. Corrective action shall be taken by the Contractor in consultation with Engineer-in-Charge wherever the Contractor is not able to maintain the specified slope.

5.5 Expansion Joints / Bellows

Installation of Expansion Joints/Bellows shall be as follows:

- All Expansion joints / Bellows shall be installed in accordance with the specification and installation drawings, supplied to the Contractor.
- Upon receipt, the Contractor shall remove the Expansion Joints/ Bellows from the case(s) and check for any damage occurred during transit.
- The Contractor shall bring to the notice of the Engineer-in-Charge any damage done to the bellows / corrugations, hinges, tie-rods, flanges / weld ends etc.
- Each Expansion Joint / Bellow shall be blown free of dust / foreign matter with compressed air or cleaned with a piece of cloth.
- For handling and installation of Expansion Joints, great care shall be taken while aligning. An Expansion Joints shall never be slinged from bellows corrugations / external shrouds, tie / rods, angles.
- An Expansion Joints / Bellow shall preferably be slinged from the end pipes / flanges or on the middle pipe.
- All Expansion Joints shall be delivered to the Contractor at "Installation length", maintained by means of shipping rods, angles welded to the flanges or weld ends or by wooden or metallic stops.
- Expansion Joints stop blocks shall be carefully removed after hydrostatic testing. Angles welded to the flanges or weld ends shall be trimmed by saw as per manufacturer's instructions and the flanges or weld ends shall be ground smooth.
- The pipe ends in which the Expansion Joint is to be installed shall be perfectly aligned or shall have specified lateral deflection as noted on the relevant drawings.
- The pipe ends / flanges shall be spaced at a distance specified in the drawings.
- The Expansion Joint shall be placed between the mating pipe ends / flanges and shall be tack welded/bolted. The mating pipes shall again be checked for correct alignment.
- Butt-welding shall be carried out at each end of the expansion joint. For flanged Expansion Joint, the mating flanges shall be bolted.

- After the Expansion Joint is installed the Contractor shall ensure that the mating pipes and Expansion Joints are in correct alignment and that the pipes are well supported and guided.

- The Expansion Joint shall not have any lateral deflection. The Contractor shall maintain parallelism of restraining rings or bellows convolutions.

- Precautions

  - For carrying out welding, earthing lead shall not be attached with the Expansion Joint.

  - The Expansion bellow shall be protected from arc weld spot and welding spatter.

  - Hydrostatic Testing of the system having Expansion Joint shall be performed with shipping lugs in position. These lugs shall be removed after testing and certification is over.

5.6 Flange Connections

While fitting up mating flanges, care shall be exercised to properly align the pipes and to check the flanges for trueness, so that faces of the flanges can be pulled together, without inducing any stresses in the pipes and the equipment nozzles. Extra care shall be taken for flange connections to pumps, turbines, compressors, cold boxes, air coolers etc. The flange connections to these equipments shall be checked for misalignment, excessive gap etc. after the final alignment of the equipment is over. The joint shall be made up after obtaining approval of Engineer-in-Charge.

Temporary protective covers shall be retained on all flange connections of pumps, turbines, compressors and other similar equipments, until the piping is finally connected, so as to avoid any foreign material from entering these equipments.

The assembly of a flange joint shall be done in such a way that the gasket between these flange faces is uniformly compressed. To achieve this the bolts shall be tightened in a proper sequence. All bolts shall extend completely through their nuts but not more than 1/4".

Steel to C.I. flange joints shall be made up with extreme care, tightening the bolts uniformly after bringing flange flush with gaskets with accurate pattern and lateral alignment.

5.7 Vents and Drains

High point vents and low point drains shall be provided as per the instructions of Engineer-in-Charge, even if these are not shown in the drawings. The details of vents and drains shall be as per piping material specifications / job standards.

5.8 Valves

Valves shall be installed with spindle / actuator orientation / position as shown in the layout drawings. In case of any difficulty in doing this or if the spindle orientation / position is not shown in the drawings, the Engineer-in-Charge shall be consulted and work done as per his instructions. Care shall be exercised to ensure that globe valves, check valves, and other uni-directional valves are installed with the "Flow direction arrow "on the valve body pointing in the correct direction. If the direction of the arrow is not marked on such valves, this shall be done in the presence of Engineer-in-Charge before installation.

Fabrication of stem extensions, locking arrangements and interlocking arrangements of valves (if called for), shall be carried out as per drawings / instructions of Engineer-in-Charge.

5.9 Instruments

Installation of in-line instruments such as restriction orifices, control valves, safety valves, relief valves, rotameters, orifice flange assembly, venturimeters, flowmeters etc. shall form a part of piping erection work.

Fabrication and erection of piping upto first block valve / nozzle / flange for installation of offline Instruments for measurement of level, pressure, temperature, flow etc. shall also form part of piping construction work. The limits of piping and instrumentation work will be shown in drawings / standards / specifications. Orientations / locations of take-offs for temperature, pressure, flow, level connections etc. shown in drawings shall be maintained.

Flushing and testing of piping systems which include instruments mentioned above and the precautions to be taken are covered in flushing, testing and inspection of piping. Care shall be exercised and adequate precautions taken to avoid damage and entry foreign matter into instruments during transportation, installation, testing etc.

5.10 Line Mounted Eqipments / Items

Installation of line mounted items like filters, strainers, steam traps, air traps, desuperheaters, ejectors, samples coolers, mixers, flame arrestors, sight glasses etc. including their supporting arrangements shall form part of piping erection work.

5.11 Bolts and Nuts

The Contractor shall apply molycoat grease mixed with graphite powder (unless otherwise specified in piping classes) all bolts and nuts during storage, after erection and wherever flange connections are broken and made-up for any purpose whatsoever. The grease and graphite powder shall be supplied by the Contractor within the rates for piping work.

5.12 Pipe Supports

Pipe supports are designed and located to effectively sustain the weight and thermal effects of the piping system and to prevent its vibrations. Location and design pipe supports will be shown in drawing for lines 2" NB. However, any extra supports desired by Engineer-in-Charge

shall also be installed.

No pipe shoe / cradle shall be offset unless specifically shown in the drawings.

Hanger rods shall be installed inclined in a direction opposite to the direction in which the pipe move during expansion.

Preset pins of all spring supports shall be removed only after hydrostatic testing and insulation is over. Springs shall be checked for the range of movement and adjusted if necessary to obtain the correct positioning in cold condition. These shall be subsequently adjusted to hot setting in operating condition. The following points shall be checked after installation, with the Engineer-in-Charge and necessary confirmation in writing obtained certifying that :

- All restraints have been installed correctly.
- Clearances have been maintained as per support drawings.
- Insulation does not restrict thermal expansion.
- All temporary tack welds provided during erection have been fully removed.
- All welded supports have been fully welded.

6.0 WELDING

Welding of pipelines shall be done as per applicable codes and **Annexure-1**

7.0 ERECTION

7.1 Pre-fabrication and Field Assembly

Extent of pre-fabrication shall be purely at the discretion of CONTRACTOR keeping in view the following :-

7.1.1 Field joint shall be decided by CONTRACTOR keeping in view the transportation of pre-fabricated pieces to site.

7.1.2 There can be some variations in the dimensions and level appearing in the arrangement drawings and those actually occurring at site due to minor variations in the location of equipments, structures, cut out etc. Adequate field joints shall be provided, permitting assembly and erection of pipe work without major modification.

7.2 Supporting

Location and design of pipe supports shown in approved drawings and support drawings shall be strictly followed.

7.2.1 Supports shall be installed in such a way that they do not contribute to over stressing of a line.

7.2.2 Fabrication and erection of additional supporting elements and structural fixtures which in COMPANY's view are required for proper supporting of the system, shall be carried out by CONTRACTOR at no extra cost.

7.2.3 All temporary supports, elements required for alignment, erection and assembly shall be removed after completion of work.

7.3 **Equipment hook-up**

7.3.1 Prior to hook-up, the alignment and trueness of flange faces shall be checked to ensure that no undue stresses shall be induced in the system while hooking up.

8.0 **INSPECTION**

8.1

8.2 CONTRACTOR shall provide all facilities/ assistance to COMPANY for proper execution of their inspection without any extra charge.

8.3 All piping work shall be subjected to inspection by COMPANY at any time during fabrication. CONTRACTOR shall furnish to COMPANY detailed work programme sufficiently in advance, in order to enable COMPANY to arrange for inspection.

9.0 **PROTECTIVE COATING**

9.1 All above ground piping system shall be applied with protective coating in accordance with specification for shop & field painting.

9.2 All under ground portion of piping system shall be coated with three layer P.E. coating. CONTRACTOR shall prepared procedure for epoxy painting of burried pipeline for approval of COMPANY. Procedure shall include surface preparation, brand and type of coating to be adopted. Coating of pipes shall not commence without approval of coating procedure. Total dry film thickness to be achieved shall not be less than 300 microns. Compatible primer and finish coat as recommended by coating manufacturer shall only be applied. Coating integrity shall be checked by "Holiday detector" over full length of coated pipe work. Coating to be supplied by CONTRACTOR shall be suitable for design temperature.

9.3 Once the coating has been accepted by COMPANY, backfiling operation can be started. In order to protect coated pipe from damage, the excavated trench shall be examined for stone, rock and any other hard substance detrimental to coating. All such substances shall be removed before lowering the pipe in the trench. COMPANY may ask for a 100mm padding of clear sand under and above pipeline in rocky or otherwise hard soil area. No additional payment on account of padding shall however be admissible.

10.0 FLUSHING

Completed piping systems shall be flushed by CONTRACTOR with fresh water, to clean the pipe of all dirt, debris, and foreign material. CONTRACTOR shall prepare a procedure for flushing of the system for approval of COMPANY. Flushing shall not be commenced without approval of flushing procedure.

10.1 CONTRACTOR shall perform all activities like dismantling and reinstalling of all strainers, in line instruments etc. before and after completion of flushing.

10.2 Flushing shall be considered as complete only after inspection and approval by COMPANY.

10.3 Disposal of muck and flushing media shall be arranged by CONTRACTOR as directed by COMPANY, in such a manner that it does not spoil the adjacent installation. CONTRACTOR shall obtain COMPANY approval regarding the place and method to be adopted for disposal of debris.

10.4 Record of flushing giving following details shall be submitted by CONTRACTOR to COMPANY for its approval and records :

a) Date of flushing

b) Identification of line : flushed-line number

11.0 HYDROSTATIC TESTING

11.1 Completed piping system as approved by COMPANY shall be hydrostatically tested in the presence of COMPANY. The general requirements of hydrostatic testing shall be in accordance with codes specified in section 2.0.

11.2 CONTRACTOR shall prepare hydrostatic test procedure based on specified codes. The hydrostatic test shall commence only after approval of procedure by COMPANY.

11.3 Piping system shall be hydrostatically tested to a pressure corresponding to 1.4 times the design pressure.

11.4 Fresh water shall be used as test media. CONTRACTOR shall locate the source of water supply and arrange for transportation of water to test site. CONTRACTOR shall arrange at his own cost the water analysis and confirm that water is suitable for testing. In case any corrosion inhibitor is to added, the same shall be done after approval of COMPANY.

11.5 Lines repaired subsequent to hydrostatic test shall be retested using the same procedure as originally adopted. However COMPANY may waive such retest in case of minor repairs by taking precautionary measures to ensure sound construction.

11.6 All equipment and instruments used for hydrostatic test shall be approved by COMPANY before start of tests.

11.7 Pressure gauges shall be installed on line to measure test pressures. In case of longer lines two or more pressure gauges shall be installed as directed by COMPANY. One gauge shall be installed at the discharge of the pressurising pump. Pressure gauge used for hydrostatic testing shall be calibrated with dead weight tester in the presence of Engineer-in-charge. Range of pressure gauge shall generally be 1.5 times the test pressure.

11.8 Orifice plates and restriction orifices shall not be installed until hydrostatic testing is completed. Temporary gaskets shall be used during testing.

11.9 First block valve of pressure instruments shall be half open & plugged at the time of hydrostatic testing. Temperature connections shall be blanked off during testing.

11.10 All equipments, in line instruments, relief valves shall be disconnected from piping system by means of blinds during testing. Control valves shall be replaced by spool pieces during testing.

11.11 High point vents and low point drain required for testing in addition to those marked in the drawings shall be provided by CONTRACTOR at his own cost.

11.12 All welded and screwed joints shall be kept clean for detecting leaks during testing.

11.13 Test pressure shall be maintained long enough to facilitate complete inspection of the system. Minimum duration of test shall be 6 hours unless other wise specified. Pressurising equipment shall be isolated immediately after test pressure is attained.

11.14 After successful completion of hydrostatic testing, the piping system shall be dewatered. All lines shall be completely dried using compressed air. CONTRACTOR shall make his own arrangement for supply of compressed air. Drying of lines shall be considered complete on approval by COMPANY.

11.15 **Test Records**

The records in duplicate shall be prepared and submitted by CONTRACTOR as below :

a) Date of test
b) Identification of pipe tested - line number
c) Test pressure
d) Test results
e) Signature of CONTRACTOR
f) Approval signature by COMPANY.

ANNEXURE-1

WELDING SPECIFICATION

1.0 GENERAL

This specification shall be followed for the fabrication of all types of welded joints of carbon steel above ground natural gas service piping systems.

The welded pipe joints shall include the following :

a) All line pipe joints of the longitudinal and circumferential butt welded.

b) Attachments of castings, forgings, flanges.

c) Welded manifold headers and other sub-assemblies

d) Welded branch connections with or without reinforcing pads.

e) Joints in welded/ fabrication piping components.

f) The attachments of smaller connections for vents drain drips and other instrument tappings.

Any approval granted by the Engineer-in-charge or owner's inspectors shall not relieve the contractor of his responsibilities & guarantees.

1.1 Applicable Codes & Standards

All welding work, equipments for welding, heat treatment, other auxiliary functions and the welding personnel shall be as per the requirements of the latest editions of the following approved standards and procedures :-

i) Code for gas transmission and distribution piping systems. ANSI B31.8.
ii) Code for petroleum refinery piping, ANSI B31.3.

In addition, the following codes/ specifications referred to in the relevant code of fabrication shall be followed for the welding/ brazing qualifications, consumable qualifications and non destructive test procedures.

i) Standard for welding of pipelines and related facilities API-1104.
ii) Material Specifications - Welding rods, electrodes and filler materials - ASME Sec. - IIC.
iii) Code for non destructive examination ASME Sec-V.
iv) Qualification standard for welding and brazing procedure and welders, brazers, welding and brazing operators - ASME Sec-I

In the event of any difference due to the additional requirements mentioned in this specification, over and above those obligation as per codes, this specification shall be binding.

1.2 **Base Material**

a) In general carbon steel is used in this plant. The details of material specifications are given in the welding Specification Chart.

b) The contractor shall provide the Manufacturer's test certificates for every heat of the materials supplied by him.

1.3A **Filler Materials**

a) The Contractor shall provide all the necessary welding electrodes, filler materials, etc. required for the execution of the work.

b) The welding electrodes/ filler wires supplied by the Contractor shall conform to the class specified in the welding specification chart. The materials shall be of the make approved by the Engineer-in-charge.

c) The electrode shall be suitable for the welding process recommended and base metal used. Unless otherwise specified physical properties of the welds produced by a electrode recommended for the welding of a particular base metal shall not be lower than the minimum valves specified for the base metal and shall correspond to the physical properties of the class of electrode adopted. The choice of electrode shall be made after conducting the required tests on the electrodes as per relevant standards, and shall be the sole prerogative of the Engineer-in-charge.

d) Tungsten electrodes used shall conform to ASME Sec. II C SFA 5.12 specification. Thoriated Tungsten electrodes shall not be permitted due to possible radiation hazard. Instead, ceriated Tungsten Electrodes (EWCe-2 or equivalent) shall be used for GTA Welding.

e) Electrode qualification test records should be submitted as per the **Exhibit-A** (attached) in respect of the electrodes tested by the contractor, for obtaining the approval of the Engineer-in-charge.

f) The Contractor shall submit batch test certificate from the electrode Manufacturers giving details of physical and chemical tests carried out by them, for each batch of electrodes to be used.

g) All electrodes shall be purchased in sealed containers and stored properly to prevent deterioration. The electrodes removed from the containers shall be kept in holding ovens at temperature recommended by the electrode Manufacture. Out-of-the oven time of electrodes before they are consumed shall not exceed the limits recommended by the electrodes manufacturer. The electrodes shall be handled with care to avoid any damage to flux covering.

h) All low hydrogen type of electrodes shall be rebaked at 350°C for 1 hour minimum and stored in ovens kept at 80-100°C before use. Recommendations of the electrode Manufacturer shall be followed if available.

i) The electrodes, filler wires and flux used shall be free from rust, oil, greases, earth and other foreign matter which can affect the quality of welding.

1.3B **SHIELDING & PURGING GAS**

a) Argon gas used in GTA welding for shielding purposes shall be 99.995% pure. The purity of the gas shall be certified by the manufacturer. The rate of flow for shielding purposes shall be established through procedure qualification tests. Normally this rate may be 12-20 CFH.

b) Argon gas with a purity level of 99.995% shall be used for purging.

c) When GTAW process alone or a combination of GTA Wand SMAW processes is recommended for the production of a particular joint, the purging shall be maintained during the root pass and for the first filling pass to minimize oxidation on the inner side of the pipe, unless otherwise specified in Welding Specification Chart.

d) Initial purging shall be maintained for sufficient period of time so that at least 4-5 times the volume between the dams is displaced, in order to completely remove the entrapped air. In no case should the initial purging period be less than 10 minutes. High gas pressure should be avoided.

e) After initial purging, the flow of the backing gas should be reduced to a point where only a slight positive pressure prevails. For systems, which have a small volume (up to 1/2 cubic foot) to be purged, a gas flow rate of 6-CFH is usually adequate. Systems of larger volume may require higher flow rates and these should be established during procedure qualification tests.

f) Gas backing (purging) is not required for socket type of welded joints.

g) Dams, used for conserving inert gas during purging, shall be removed after completion of the welding, and shall be accounted for. Wherever, removal of dams is not possible after welding, use of water-soluble dams should be made.

1.4 **Welding Consumables**

The Contractor shall provide at this own expense all the welding consumables necessary for the execution of the job such as electrodes filler wires, oxygen, acetylene, etc. and these should bear the approval of the COMPANY.

1.5 **Equipment & Accessories**

1.5.1 The Contractor should have the arrangement of sufficient number of welding and cutting equipments, auxiliaries and accessories of sufficient capacities so as to meet the target schedule.

1.5.2 All the equipment for performing the heat treatment, including transformers, thermocouples, flow meters, automatic temperature recorders with suitable calibration arrangement etc. shall be provided by the Contractor, at his own expense and these should bear the approval of the COMPANY.

1.5.3 Contractor shall make necessary arrangements at his own expense for providing the radiographic equipment, radiographic films, and all the equipment/ materials required for carrying out the dye penetrant/ magnetic particle test for satisfactory and timely completion of the job.

1.5.4 Redoing of any work necessitated by faulty equipments or operation used by the Contractor, will be done at his own expense.

1.6 **Welding Processes**

1.6.1 Welding of various materials under this specification shall be carried out using Shielded Metal Arc Welding (SMAW) Process with the approval of the Engineer-in-charge.

1.6.2 The welding processes to be employed are given in the welding specification chart. Any deviation desired by the Contractor shall be obtained through the express consent of the Engineer-in-charge.

1.6.3 Automatic and semi-automatic welding processes shall be employed only with the express approval of the Engineer-in-charge. The welding procedure adopted and consumables used shall be specifically approved.

1.6.4 A combination of different welding processes or a could be employed for a particular joint only after duly qualifying the welding procedure as per the requirements of code of fabrication to be adopted and obtaining the approval of the Engineer-in-charge.

1.7 **End Preparation**

1.7.1 **End Preparation**

The edges to be welded shall be prepared to meet the joint design requirements by gas cutting, machining or grinding method. After gas cutting, oxides shall be removed by chipping or grinding.

1.7.2 **Cleaning**

a) The ends to be welded shall be properly cleaned to remove paint, oil, greases, rust, oxides, sand, earth and other foreign matter. The ends shall be

completely dry before the welding commences.

b) On completion of each run, craters, welding irregularities, slag etc., shall be removed by grinding and chiseling. Wire brushes used for cleaning stainless steel joints shall have stainless steel wires and the grinding wheels used for grinding stainless steel shall be of a suitable type. Separate grinding wheels and wire brushes should be used for carbon steels and stainless steels.

1.8 **Alignment and Spacing**

a) Prior to alignment, the contractor shall inspect the pipe ends inside and outside for damage, dents, laminations etc. Pipe for welding shall be set up correctly spaced. Temporary attachment of any kind shall not be welded. Every effort shall be made to reduce misalignment by the use of clamp and rotation of pipes to the best fit. For pipes of same nominal wall thickness, the off set should not exceed 1.6mm. Any branch connections sleeve shall be at least 150mm from any other weld. The welds for fitting shall be so located that top of the weld shall not come within 50mm of any other weld. The use of internal line up clamps is mandatory for diameters 10" and above. However, in case where it is impossible to use internal line up clamp, external line up clamp may be used.

b) Tack welds, for maintaining the alignment, of pipe joints shall be made only by qualified welders using approved WPS. Since the tack welds become part of the final weldment they shall be executed carefully and shall be free from defects. Defective tack welds must be removed prior to the actual welding of the joints.

1.9 **Weather Conditions**

1.9.1 The parts being welded and the welding personnel should be protected from rain and strong winds. In the absence of such a protection no welding shall be carried out.

1.9.2 During field welding using GTAW process, particular care shall be exercised to prevent any air current affecting the welding process.

1.10 **Welding**

1.10.1 **Root Pass**

a) Root pass shall be made with electrodes/ filler wires recommended in the welding specification chart. The preferable size of the electrode is 2.5mm diameter (12 SWG) but in no case greater than 3.25mm (10 SWG).

b) Uphill welding shall be adopted for welding pipes weld fixed with its axis horizontal. Downward technique of welding shall not be used for welding of pipes in horizontal position, unless specifically permitted by Engineer-in-charge for a particular case.

c) The root pass of but joints should be executed properly so as to achieve full penetration with complete fusion of the root edges. Weld projection inside the pipe shall not exceed .4mm wherever not specified by the applicable code.

d) Any deviations desired from the recommended welding technique and electrodes indicated in the welding specification chart should be adopted only after obtaining express approval of the Engineer-in-charge.

e) Welding shall be continuous & uninterrupted during a pass.

f) On completion of each run, craters, welding irregularities, slag etc., shall be removed by grinding and chiselling.

g) While the welding is in progress care should be taken to avoid any kind of movement of components, to prevent occurrence of weld cracks.

h) Fillet welds shall be made by shielded metal arc/ GTAW welding process irrespective of the thickness and class of piping.

i) Peening shall not be used unless specified in the welding specification chart.

1.10.2 **Joint Completion**

a) Joint shall be completed using the class of filler wires/ electrodes, recommended in the welding specification chart. Size of the electrode shall not exceed 4 mm in diameter for stainless steels and alloy steels used for low temperature applications.

b) Two weld beads shall not be started at the same point in different layers.

b) Butt joints shall be completed with a cover layer that would effect good cover at the joint edge and a gradual notch free surface.

d) Each weld joints should have a workman like finish.

e) Weld identification mark shall be stamped clearly at each joint, just adjacent to the weld. Metal stamping shall not be used on the thin wall pipe. Suitable paint shall be used on thin wall pipes for identification.

f) No painting shall be done until the weld joint has been hydrostatically tested.

1.10.3 **Dissimilar Welds**

Where welds are to be produced between carbon steels and alloy steels, preheat and post weld heat treatment requirements shall be those specified for corresponding alloy steels and filler wire / electrodes shall correspond to ER 70 S-G or AWS E-7016/7018 type. For welds between two dissimilar Cr-Mo low alloy steels, preheat and post weld

heat treatments shall be those specified for higher alloy steel and electrodes used shall correspond to those specified for steel of lower alloy content. For carbon steel or alloy steel to stainless welds, use of filler wire / electrodes E/ER-309/E-310/E NiCr Fe-3 shall be made. The welding procedure, electrodes / filler wires to be used shall be approved by the Engineer-in-Charge.

1.11 Heat Treatment

1.11.1 Preheating

a) Preheating requirements for the various materials shall be as per the welding specification chart attached. No welding shall be carried out without preheating the joint to 10°C (50°F) when the ambient temperature is below 10 degree.

b) Preheating shall be performed using resistance or induction heating methods. Preheating by gas burners, utilising any acetylene or oxy-propane gas mixtures, with neutral flame may also be carried out when permitted by the Engineer-in-charge.

c) Preheating shall extend uniformly to atleast three times the thickness of the joint, but not less than 50mm, on both sides of the weld.

d) Preheating temperature shall be maintained over the whole length of the joint during welding. Temperature indicating crayons or other temperature indicating devices shall be provided by the contractor to check the temperature.

e) Preheating temperature shall be maintained over the whole length of the joint during welding. Temperature recorders shall be provided by the Contractor to record the temperature.

1.11.2 Post Heating

In case of alloy steel materials such as Cr-Mo steels, if the post weld heat treatment is not performed immediately after welding, the weld joint and adjacent portion of pipe, at least 50 mm on either side of weld, shall be uniformly heated to 300°c. This temperature shall be maintained for half an hour minimum, and then wrapped with mineral wool before allowing it to cool to room temperature. If the Post Heating temperature specified in the Welding Specification Charts exceeds 300°C, the same shall be followed. Similarly, if the welding specification chart specifies post-heat time, the same shall be applicable. Post weld heat treatment as specified in the Welding Specification Chart shall be carried out later on.

1.11.3 Postweld Heat Treatment

a) Post weld heat treatment, wherever required for joints between pipes, pipes an fittings, pipe body and supports shall be carried out as per the relevant specifications, applicable standards and the instructions of the Engineer-in-charge. In this regard procedure qualification to be done before carrying out

PWHT in production welds.

b) The heat treatment of welded joints shall be carried out as per the requirements laid down in ANSI B31.8 and welding specification chart.

c) The contractor shall submit for the approval of the Engineer-in-charge, the details of the post weld heat treatment procedure, as per **Exhibit `B'** attached, that the propose to adopt for each of the materials/ assembly/ part involved, well before carrying out actual heat treatment.

d) Post weld heat treatment shall be done by using an electric resistance or induction heating equipment as decided by the Engineer-in-charge.

e) While carrying out local post weld heat treatment, technique of application of heat must ensure uniform temperature attainment at all points of the portion being heat treated. Care shall be taken to ensure that width of treated band over which specified post weld heat treatment is carried out, the temperature attained is atleast as that specified in the relevant applicable standards/ codes.

f) Throughout the cycle of heat treatment, the portion outside the heated band shall be suitably wrapped under insulation so as to avoid any harmful temperature gradient at the exposed surface of pipe. For this purpose temperature at the exposed surface of the pipes should not be allowed to exceed 400°C.

g) The temperature attained by the portion under heat treatment shall be recorded by means of thermocouple pyrometers. Adequate number of thermocouples should be attached to the pipe directly at the equally spaced location along the periphery of the pipe joint. The minimum number of thermocouples attached per joint shall be 1 upto 6" dia, 2 upto 10" dia and 3 upto 12" and above. However the Engineer-in-charge can increase the required minimum number of thermocouples to be attached if found necessary.

h) Automatic temperature recorders which have been duly calibrated should be employed. The calibration chart of each recorder should be submitted to the Engineer-in-charge prior to starting the heat treatment operation and his approval should be obtained.

i) Immediately on completion of the heat treatment, the post weld heat treatment charts/ records alongwith the hardness test results on the weld joints (whenever required as per the welding specification chart), shall be submitted to Engineer-in-charge for his approval.

j) Each joint shall bear an identification number which shall be maintained in the piping sketch to be prepared by the contractor. The joint identification number should appear on the corresponding post weld heat treatment charts. The same identification numbers shall also be followed for identification for corresponding radiographic films. The chart containing the identification

numbers and piping sketch shall be submitted to the Engineer-in-charge in suitable folders.

k) The hardness of the heat affected zone as well as of the weld metal, after heat treatment, shall be measured using suitable hardness tester and shall not exceed the maximum hardness specified in the welding specification chart. The weld joint shall be subjected to re-heat treatment when hardness measured exceeds the specified limit, at the contractor's own expenses.

l) The contractor shall arrange for the hardness testing and shall maintain the records of all joints tested. These records shall be checked by the plant Owner's inspector.

1.12 Cleaning of the Weld Joints

All weld joints shall be free from adherent weld spatter, slag, dirt or foreign matter. This can be achieved by brushing.

1.13 Inspection & Testing

1.13.1 General

a) The owner's inspector shall have free access to all concerned areas, where the actual work is being performed. The contractor shall also offer the Owner's inspector all means and facilities necessary for carrying out inspection.

b) The owner is entitled to depute his own inspector to the shop or field where pre-fabrication and erection of pipelines are being done with (but not limited to) the following objectives :-

i. To check the conformance to relevant standards and suitability of various welding equipments and the welding performance.
ii. To supervise the welding procedure qualification.
iii. To supervise the welder performance qualifications.

c) Contractor shall intimate sufficiently in advance the commencement of qualification tests welding works and acceptance tests, to enable the plant owner's inspector to be present to supervise them.

1.13.2 Welding Procedure Qualifications

a) Welding Procedure Qualification shall be carried out in accordance with the relevant requirements of API 1104/ ASME Sec-IX or other applicable codes and other job requirements by the contractor at his expense. The contractor shall submit the welding procedure specifications in format as per **Exhibit-C** (attached) immediately after the receipt of the order.

b) COMPANY's inspector will review, check and approve the welding procedure submitted and shall release the procedure for procedure qualification tests. The procedure qualification test shall be carried out by the Contractor under field conditions at this own expense. A complete set of test results in format as per **Exhibit-D** (attached) shall be submitted to the COMPANY's inspector for approval immediately after completing the procedure qualification test and atleast 2 weeks before the commencement of actual work. Standard tests as specified in the code shall be carried out in all cases. In addition to these tests, other tests like radiography, macro/ micro examination, hardness testers, dye penetrant examination, Charpy V-notch etc. shall be carried out on specimens. It shall be the responsibility of the contractor to carry out all the tests required to the satisfaction of the COMPANY's Inspector. The destructive testing of welded joints shall be as per **Annexure-2** and ASME Sec-IX.

1.13.3 **Welder's Qualification**

a) Welders shall be qualified in accordance with the API 1104/ ASME IX and other applicable codes by the contractor at his expense. The butt weld test pieces of the qualification test shall meet the radiographic tests requirements as mentioned in this specification. The COMPANY's inspector shall witness the test and certify the qualification of each welder separately. Only those welders who have been approved by the COMPANY's inspector shall be employed for welding. Contractor shall submit the welder qualification test reports in the standard format and obtain express approval, before commencement of the work. No welder shall be permitted to work without the possession of the identify card. It shall be the responsibility of contractor to carry out Qualification tests of welders.

b) The welders shall always have in their possession the identification card as shown in **Exhibit-E** and shall produce it on demand by the COMPANY's Inspector. It shall be the responsibility, of the Contractor to issue the identify cards after it has been duly certified by the COMPANY. If a welder is found to perform a type of welding for which he is not qualified, he shall be debarred from doing any further work. All welds performed by an unqualified welder shall be cut and redone by a qualified welder at the expense of the Contractor.

1.13.4 **Visual Inspection**

Inspection of all welds shall be carried out by COMPANY as per the latest editions of the applicable codes and specifications. All finished welds shall be visually inspected for parallel and axial alignment of the work, excessive reinforcement, concavity of welds, shrinkage, cracks, under cuts, dimensions of the weld, surface porosity and other surface defects. Under-cutting adjacent to the completed weld shall not exceed the limits specified in the applicable standard/ code.

1.13.5 **Non-destructive Examination**

The non destructive examination shall mainly consist of examination using x-ray radiography as detailed in **Annexure-4.**

Radiographic examination of one hundred percent (100%) girth welds will be required by the COMPANY. Welds shall meet the standards of acceptability as set forth in API 1104 and as per the requirements laid in subsequent paragraphs.

The CONTRACTOR shall make all the arrangements for the radiographic examination of work covered by this specification at his expense.

The COMPANY will review all the radiographs of welds and inform the CONTRACTOR regarding unacceptable welds. The decision of the COMPANY shall be final and binding in this regard.

All requirements mentioned in the specification shall be arranged and executed by the CONTRACTOR through his own resources. In addition, for pipes with wall thickness 9.5mm and above, ultrasonic inspection is required in the following cases as per **Annexure-3** of this specification.

a) On the first 100 welded joints corresponding to each automatic (GTAW/ GMAW) welding procedure used.

b) When 20mm or more are cut from the pipe end as supplied, the ends shall be ultrasonically inspected for an additional length of 20mm to ensure no lamination exist.

c) When welds are repaired.

d) When in the opinion of COMPANY, ultrasonic inspection is required to confirm or clarify defects indicated by radiography.

e) When automatic procedure is used at least 10cm on each weld shall be ultrasonically inspected at COMPANY's discretion.

In addition, ultrasonic inspection may be required for certain critical weldings of the pipeline (i.e. tie-ins, welding of valves, flanges) randomly selected at COMPANY's discretion. All fillet and groove welds other than that radiographed shall be subjected to dye pentrant/ MP inspection. The non destructive test system used for inspecting welds must be approved by the COMPANY.

Weld quality is judged on the basis of the acceptability criteria mentioned below :

Any weld which as a result of radiographic and / or ultrasonic examination in the opinion of COMPANY **exhibits** imperfections greater than the limits stated in API-1104 latest edition or as superseded in this article shall be considered defective and shall so be marked with an identification paint marker.

In addition to the API-1104 requirements, the welds containing cracks including crater cracks regardless of size of location are unacceptable.

i. Any amount of inadequate penetration of the root bead as defined by API-1104 is unacceptable.

ii. Any amount of incomplete fusion between the root and bevel as defined by API-1104 is unacceptable.

iii. Unrepaired burn through areas are unacceptable.

Contractor shall appoint agency for carrying out the radiography works at site from the list of agency (ies) enclosed in the bid document.

- The Radiographic Examination procedures to be adopted shall be submitted by the contractor as per **Exhibit-F** and shall be got approved from the Owner's Inspector prior to employment. A person qualified to ASNT Level-II or ASNT Level-III in Radiographic testing shall prepare the procedure. The Radiography Procedure shall be established to demonstrate that the required sensitivity can be consistently achieved under the most unfavorable parameters (e.g. source to film distance, geometric unsharpness, thickness etc.). The radiographic technique and procedure adopted shall conform of the requirements mentioned in Article 2 as well as Article 22 of ASME Sec.V. The IQI sensitivity obtained shall be equal to or better than the requirements mentioned in Article 2 of ASME Sec.V. Source side penetrameter shall be used in establishing radiographic procedure / technique. The acceptance criteria shall be as per the relevant codes of Fabrication and over riding requirements if mentioned else where in the technical specifications of the contract. The Contractor shall be responsible for carrying out Radiography; rectification of defects and re-radiography of welds repaired/rectified at his cost.

- The extent of Radiography shall be as per specifications to be supplied to the Contractor. For welds between dissimilar materials, the extent of Radiographic Examination shall be the more stringent of the two recommended for the materials being welded. Wherever random Radiography is called for, in a particular piping class, the dissimilar materials weld joints shall essentially be included.

- Type of Radiation source and film to be used shall be as per **Exhibit-H** for carrying out radiographic examination. However if specifications (as given else where in the contract) for some critical material require usage of X-Radiation, then Radiography shall be done using X-Rays only.

- The Contractor shall fulfill all the statutory and owner's safety requirements while handling X-ray and Gamma-ray equipments.

- In case of random radiography, the joints for Radiography shall be selected by the Owner's Inspector and the Radiography shall be performed in his presence, if he instructs the contractor to do so. The contractor shall furnish all the radiographs, to the Owner's Inspector immediately after processing along with evaluation by a person qualified to ASNT Level-II in Radiographic testing, inline with Article 2 of ASME Sec.V. The certificate of ASNT / ISNT Level II qualification of the NDT personnel shall be submitted to owner's inspector for his approval prior to start of job.

- The Contractor shall provide the Owner's Inspector, all the necessary facilities at site such as a dark room with controlled temperature, illuminator (viewer) suitable for varying densities, a duly calibrated electronic densitometer with batteries, magnifying glass, tracing papers, ruler, marking pencils etc. to enable him to review the radiographs.

- Where random radiography is specified, the first weld of each welder shall be completely radiographed. In the case of pipe of size 6" and below, the first two welds shall be completely radiographed.

- For each weld performed by a welder found unacceptable, two additional checks shall be carried out on welds performed by the same welder. This operation is iterative and the of two additional welds for each weld deemed unsatisfactory shall be continued till such time that two consecutive welds of satisfactory quality are found for every defective weld.

- The Contractor shall carry out these additional radiographic testing at his own expense. To avoid the possibility of too many defective welds by a single welder remaining undetected for a long period to time, the Contractor shall promptly arrange for Radiographic Examination so that there is no accumulation of defective joints.

- Contractor shall quote rates for X-ray as well as Gamma Ray for joints indicated to be radiographed by X-ray in Table of **Exhibit-H.**

1.13.6 **Check shots**

(a) Owner / Engineer- in- charge or his representative shall select 5% of the total joints radiographed on a day for check shots. Contractor shall carry out check shots as directed.

(b) Weld profiles of check shots shall be compared with weld profile observed in the earlier Radiographs. In the event of anyone variation in the check shots and earlier Radiographs, contractor shall re-shoot the entire lot of joints radiographed by particular Radiography agency on the particular date. All the re-shot films shall be compared with the originally submitted films.

1.13.7 **Magnetic Particle & Liquid Penetrant Examination**

a) Whenever such tests are specified, the tests shall be carried out on joints chosen by the Owner's inspector, as per ASME Section V article 6 and 7 respectively. The tests are to be performed by a person possessing a valid ASNT / ISNT Level-II qualification in the method being used.

(b) For austenitic stainless steels and other nonmagnetic materials, liquid (dye) penetrant test shall be carried out. For carrying out this test, the materials shall be brought within a temperature limit of 15° to 50°C.

1.13.8 **Hardness Test**

Hardness requirements for welds shall be as per the Welding Specification Chart / Non Destructive Examination Specification attached elsewhere in the contract. Hardness testing shall be carried out by Vickers Hardness Tester during welding procedure qualification and shall be cross sectional. For production welds, hardness testing shall be carried out by portable digital hardness testers. Poldi hardness tester shall not be permitted. Contractor shall produce documentary evidence/calibration certificate to the Owner's Inspector and obtain approval of the hardness testing equipment.

1.13.9 **Proof Tests**

Hydrostatic and pneumatic tests shall be performed as per the requirements laid down in the respective flushing & testing specification/ applicable codes to demonstrate the soundness of the welds. The tests shall be conducted only after fulfilling the requirements of visual examination, radiography etc. and after the entire work has been certified by the Owner's inspector, as fit for subjecting to such test.

1.14 **Repairs of Welds**

a) Defects ascertained, through the inspection methods, which are beyond acceptable limits shall be removed from the joint completely by the process of chipping and grinding.

b) When an entire joint is judged unacceptable, the welding shall be completely cut and the edges be suitably prepared as per required alignment tolerances. The welded joint shall again be examined following standard practices.

c) No repair shall be carried out without prior permission of the Owner's inspector.

d) Where random radiography is specified, the test welds of each welder shall be completely radiographed. In the case of pipes of sizes 6" and below, the first two welds shall be completely radiographed.

e) For each weld found unacceptable due to a welder's fault, two additional checks should be carried out on welds performed by the same welder. This operation is interactive and the procedure of radiographing two additional

welds for each weld deemed unsatisfactory shall be continued till such time that the two consecutive welds of satisfactory quality are found for every defective weld.

The contractor shall carry out these additional radiographic testing.

To avoid the possibility of too many defective welds by a single welder remaining undetected for a long period of time, the Contractor shall promptly arrange for radiographic examination so that there is no accumulation of defective joints.

1.15 **Limitations on Repairs**

Only one attempt at repair of any region is permitted. Repairs are limited to a maximum 30% of the weld length. For internal or external repairs which open the weld root, only 20% of the weld length may be repaired. Repairs opening the root must only be carried out in the presence of COMPANY. The minimum length of a repaired area shall be 100mm as measured over the recapped length. Welds containing cracks shall be cut out and rebevelled to make a joint, COMPANY shall authorise all repairs.

1.16 **Weld Rejected by Accumulation of Defects**

Where a weld is rejected by the accumulation of defect clause, as defined by API-1104 and this specification, repairs within these limitations are permitted. Defects in the filling and capping passes shall be repaired preferentially.

1.17 **DOCUMENTS TO BE SUBMITTED BY CONTRACTOR (4 COPIES EACH)**

a) Electrode and Welding Consumable Qualification Records as per **Exhibit-A, f**or the Welding Consumables tested and approved for the work.
b) Batch Test Certificates, for the Electrodes used, obtained from the Electrode Manufacturers.
c) Proposed Heat Treatment Procedure as per **Exhibit-B.**
d) Heat Treatment Charts.
e) Weld joint hardness test results.
f) Welding Procedure Specifications as per **Exhibit-C** immediately after receipt of the order.
g) Welding Procedure Qualification records as per **Exhibit-D.**
h) Welder Performance Qualification records as per **Exhibit-E** immediately after conducting Welder Qualification Tests.
i) Radiography Procedure as per **Exhibit-F** and other NDT procedures.
j) Radiographic test Report along with Radiographs and other NDT reports.
k) Piping Sketch (Isometric) giving all the details regarding the pipe specifications, welded joints, joints radiographed magnetic particle, tested, ultrasonic tested, penetrant tested, joints heat treated, WPS used, welders identification number, etc.

EXHIBIT-A

ELECTRODE QUALIFICATIONS TEST RECORD

A : Tested at (Site Name) Date :

Test Period :

Manufacturer's Name :

Brand Name :

Batch Number & size Tested :

Classification & Code :

Intended for Welding in positions :

In combination with (if any) :

Code of Reference (used for testing) :

Special requirements (if any) :

B : **All - Weld Tensile Test**

Base Material used :

Pre-heat temperature :

Postweld Heat Treatment Details :

Visual Examination :

Radiographic Examination Results :

Tensile Test Results :

Sl. No.	Identification Number	U.T.S.	Yield Point	Elongation	Remarks

C : **Impact Test Results**

Test Temperature : Notch in :

Type of Specimens (Impd, Charpy : Size of Specimens :

Specimen No.	Impact Value	Average
1.		
2.		
3.		
4.		
5.		

D : **Chemical Analysis Result**

Electrode size used :

Batch No.

%C	%S	%P	%Si	%Mn	%Cr	%Ni	%Mo

E : **Fillet Weld Test Results**

Welding Positions :

Base Materials :

Size of electrode used :

Visual Inspection Results : 1)
2)
3)

Micro Test Results

Fracture Test Results :

Remarks :

F : **Other Test Results**

i) Transverse Tensile Test :

In Combination with :

Base Material used :

Position of Welding :

Preheat Temperature :

Postweld Heat Treatment :

Radiography :

Identification No.	U.T.S.	Fracture in	Remarks

2. **Guide Bend Test**

Position	ID No.	Root, Face or Side Bend	Remarks
	1		
	2		
	3		
	4		
	5		

3. **Any other tests**

Conclusions

Approved By :

EXHIBIT-B
Sheet 1 of 2

STRESS RELIEF HEAT TREATMENT PROCEDURE SPECIFICATION

Name of the Heat - Treatment :.....
Name of the Project :.....Specification
Reference No. .....

1. **General Details**

Name of the Equipment : .....

Name of the Assembly/ Part : .....

Assembly/ Part Drawing No. : .....

Material : .....

2. **Furnace Details**

Type of Heating : Gas/ Oil/ Elec. Res./ Induction (Tick Mark)

Capacity (size) : .....
Maximum Temp. (°C)

Method of temp. measurement : .....

Atmosphere Control : .....

3. **Heat Treatment Cycle Details**

Charging Temp. °C : .....

Rate of Heating, °C/Hr : .....

Soaking Temp., °C : .....

Soaking Time, Hrs. : .....

Rate of Cooling, °C/Hr : .....

Mode of Cooling : .....

4. Other Details, if any : .....

5. The following documents are to be furnished :
along with these specification :

   i) Material Test Certificates

   ii) Assembly/ Part Details

EXHIBIT-C
Sheet 1 of 2

STANDARD PROCEDURE SPECIFICATION NO.

for ..... Welding of ..... Pipe and Fittings

- Process & type ..... (Details of special machines).
- Material ..... (Pipes to which the procedure applied, grade of steel, type of pipe, Reference Specification).
- Diameter and wall thickness ..... (Series of dia and thickness to which procedure is applicable)
- Joint Design .....
- Filler Metal and Number of Beads .....
- Electrical or Flame Characteristics .....
- Position .....
- Direction of Weldings ..... (Uphill, Downhill, Mixed)
- Number of Welders .....
- Time Lapse between passes .....
- Type of Line-up Clamp .....
- Removal of Line-up Clamp ..... (Minimum percentage of welding carried out before removal of clamps)
- Cleaning .....
- Preheat, Stress Relief .....
- Shielding Flux .....
- Speed of Travel .....
- Sketches and Tabulations (to be attached) .....
- Wire Speed (rate of wire speed and variation range) .....
- Minimum No. of passes which must be completed before discontinuing weld.

- Minimum No. of welders required for the first pass and second pass :

  Tested : ..... Welder .....

  Approved : ..... Welding Supt. .....

  Accepted : ..... Chief Engineer .....

EXHIBIT-D
Sheet 1 of 2

COUPON TEST RECORD

Location .....
Date ..... State ..... Roll Weld ..... Fixed position weld ..... welder ..... Mark
..... Welding Time ..... Time of day
..... M. Temperature ..... F. Weather Condition
..... Wing break used ..... Voltage
..... Amperage ..... Type of welding machine
..... Size ..... Filler Metal
..... Size of reinforcement
..... Pipe kind and Grade
..... Wall thickness
..... Dia O.D. .....

---

1 2 3 4 5 6 7

Bead No. ..... Size of electrode
..... No. of electrode
.....

---

1 2 3 4 5 6 7

Coupon Stenciled ..... Original Dimension of Plate ..... Original area of plate (inch^2) ..... Maximum Load
..... Tensile S/ in. plate area
..... Fracture Location
.....

Procedure	Qualifying Test	Qualified
Welder	Line Test	Disqualified

Max. tensile strength ..... min. tensile strength .....

Avg. tensile strength ..... Remarks on tensile strength .....

1. .....

2. .....

3. .....

4. .....

Remarks on Bend Tests

1. .....

2. .....

3. .....

4. .....

Remarks on Nick Tests

1. .....

2. .....

3. .....

4. .....

Other Tests .....

(Use back for additional remarks)

EXHIBIT-E

WELDER's IDENTIFICATION CARD

Name :

Identification :

Date of Testing :

Valid Unit :

Approval of Welding :

Welding Position :

Material :

Diameter :

Wall Thickness :

Type of Welding Consumable :

Approved By :

Employer's Signature
with Seal

EXHIBIT-F
Sheet 1 of 1

RADIOGRAPHIC PROCEDURE FOR PIPE WELDING

1. Location
2. Date of Testing
3. Name of Supervised Contractor
4. Material
5. Dia. & Thickness
6. Type of Weld Joint
7. Radiation Source (X-ray, gamma ray)
8. Type of equipment (external/ internal)
9. Intensifying screens and material
10. Filter type and placement mask, diaphragm lead screen etc. adjacent to radiation sources or specimen.
11. Geometric relationship (source local spot size, max and min source strength, object to film distance, radiation angle with respect to weld and film).
12. Limit of film coverage
13. Film type and make
14. Exposure Time
15. Processing (time temperature for development stop bath or rinse, fixation, washing, drying etc.)
16. Density
17. Sensitivity
18. Type of penetrameter

Approval of the COMPANY

Signature of CONTRACTOR
with seal

WELDING SPECIFICATION CHART

EXHIBIT-G
Sheet 1 of 2

Class :

Material Specification :

Pipes : API 5L Gr. X 60, API 5L Gr. B API 5L Gr. X 42

Fittings : A 105, A234 Gr. WPB. MSS-SP-75, Gr. WPHY42, MSS-S

Flanges : A 105, MSS-SP-44 Gr. F42, MSS-SP as Gr. WPH 60

Other : _____ 44 Gr. F6C

Base Metal of NCL :

Welding Processes : Groove Joints : Butt

Root Pass SMAW Filler Pass SMAW Root Pass SMAW Filler Pass SMAW Filler Joints/ Socket Joints : SMAW

Welding Materials : Groove Joints : Butt

Root Pass E6010G/ E7010G Filler Pass F7010G/ E8010G/ E8818G
Root Pass E7010/ E7018G/ E8018G Filler Pass F7016/ E7018G/ E80118G

Filler Joints/ Socket Joints : E7016/ E7018/ E7018G/ E8018G

Backing Page _____ Consumable :

Gases : Purging _____ Sheilding

Gas Composition : Purging _____ Sheilding

Preheating : 10 min for all welds, 100°C Post heating

Post weld heat treatment :

Holding temp. : 595-650 C Holding Time : 1 Hr. per inch thk
Rate of heating : 200 C/hr max. Min holding time : 1 hr.
Method of cooling : Controlled Rate of cooling : 200°C/hr max.

Mechanical property requirements :

Charpy `V' notch impact test valve :

Normal	:	22 J
Average	:	27 J
At temperature	:	0 °C
Hardness	:	300 HV10 (for weld & HAZ)

Code of fabrication : ANSI B31.8; API 1104 and welding specifications.

TECHNICAL NOTES

1. Welding, heat treatment and non destructive testing shall be carried out in accordance with the requirement of ANSI B31.8/ API-1104 and additional requirement specified in the specification. In case of conflict between code and specification more stringent conditions shall be applicable.

2. No welding shall be carried out without preheating the joint to 10°C (50 °F) when the ambient temperature is below 10°C (50 °F).

3. Preheat shall be applied while welding the following material as detailed below :

API 5L Gr. B	:	Thickness upto and inclusive of 12mm	100 °F min.
A 105	:		
MSS-SP-44 Gr. F60	:	Thickness beyond	200 °F
A 234 Gr. WPB	:	12 mm	
MSS-SP-75-WPHY60			

4. For fillet welds complete welding may be carried out using the electrodes recommended for filler passes.

5. All weldments & HAZ shall meet the hardness requirements of 300 HV10 during procedure qualification. If the hardness exceeds 300 HV10 the joints shall be heat treated at temp. 1100-1250 °F for one hour. The heating and cooling rates shall be decided during procedure qualification subject to a maximum of 200 °C/Hr. Hardness testing shall be carried out by Vickers hardness tester during welding procedure qualification test only. No hardness test is required for production welds.

6. The electrodes used shall meet the following additional requirement :

Specification	UTS (Min.) (As welded)	Impact (As welded)
E7018-G	52.7 kg/mm^2	20 ft. lb. at 0°C
E7018-I	52.7 kg/mm^2	-
E6010	-	-
E6018	-	20 ft. lb. at 0°C

7. All the weldments & HAZ shall meet the impact test requirement of 20 ft. lb at 0°C.

ANNEXURE-2

1.0 DESTRUCTIVE TESTING OF WELDED JOINT - BUTT WELDS

1.1 Preparation

Having passed the visual and the non destructive inspection, the test weld shall be subjected to mechanical test.

After satisfactory completion of all visual and non destructive testing the procedure test weld shall be set aside for a period not less than 24 hours. No further work on the test weld and no cutting of test specimens from the weld be performed till a period of at least 24 hours has expired.

Weld specimens, for pipe diameter greater than or equal to 12.3/4" shall be taken from the positions indicated in Fig. 1 of this specification from areas as free from defects as possible. For this reason it is necessary to take the previous non destructive tests into account. The minimum no. of tests to be carried out is given in Table-I of this specification.

The test shall be carried out at laboratories approved by COMPANY. The specimens shall be prepared in accordance with the figure given in the paragraphs which refer to the individual test.

Table-I

TYPE AND NUMBER OF TEST SPECIMENS FOR PROCEDURE QUALIFICATION TEST

Pipe Size, Out-side diameter Inches	Number of Specimens									
	Tensile API	Tensile ISO	Nick Break	Root Bend	Face Bend	Side Bend	Macro	Hard-ness	Impact	Total
Wall Thickness > ½ inch (12.7mm) and under										
Under 2 3/8	0	0	2	2	0	0	0	0	0	4
2 3/8 to 4½ incl.	0	0	2	2	0	0	0	0	0	4
Over 4½ less than 12 3/4	2	0	2	2	2	0	2	2	12	24
12 3/4 and over	2	2	4	4	4	0	2	2	24	44
Wall Thickness > ½ inch (12.7mm)										
4½ and smaller	0	2	0	0	0	2	0	0	0	4
Over 4½ less than 12 3/4	2	0	2	2	2	0	2	2	12	24
12 3/4 and over	2	2	4	0	0	8	2	2	24	44

1.2 **Tensile Strength**

Specimens for pipe diameter over 12 3/4" shall be taken from the position indicated in Fig. 1 of this specification. Two API type specimen shall be taken for pipe diameter greater than or equal to 12 3/4".

1.3 **Nick-Break Test**

1.3.1 **Preparation**

Specimens for nick-break test with notches thus worked can break in the base metal, instead of in the fusion zone; therefore an alternative test piece may be used after authorisation by the COMPANY with a notch cut in the reinforcement of outside weld bead to a maximum depth of 1.5mm measured from the surface of the weld bead.

1.4 **Macroscopic Inspection**

1.4.1 **Preparation**

Specimens shall be taken from the positions indicated in Fig. 1 of this specification and shall be prepared in accordance with ASTM E2 and E3.

The width of the macrosection has to be at least three times the width of the weld. The section is to be prepared by grinding or polishing and etching to clearly reveal the weld metal and heat effected zone.

1.4.2 **Method**

Specimens shall be carefully examined under the microscope with a magnification of at least 25 times. The COMPANY may ask for a macrograph with 5 times magnification for documentation purposes.

1.4.3 **Requirements**

Under macroscopic examination, the welded joints shall show good penetration and fusion, without any defect exceeding the limits stated in the evaluation criteria of the nick break test.

1.5 **Hardness Test**

1.5.1 **Preparation**

The prepared macrosection is to be used for hardness testing using the Vickers method with 100 N (10 kg) load. Indentations are to be made along traverses each approximately 1mm below the surface at both side of the weld.

In the weld metal a minimum of 6 indentations equally spaced along the traverses are to be made. The HAZ indentations are to be made along the traverses for approximately 0.5mm each into unaffected material, and starting as close to the fusion line as possible.

One indentation at each side of the weld along each traverse has to be made on parent metal. Reference is made to fig. 3 of this specification. The indentation are to be made in the adjacent region as well as on the opposite side of the macrosection along the specified traverses.

1.5.2 **Method**

The test shall be carried out in accordance with Recommendation ISO R81, Vickers hardness, using laboratory type machine controlled as per-recommendation of ISO R 146 and using a diamond pyramid penetrator set at 2.37 rad. (136) with a load of 100 N (10 kg).

1.5.3 **Requirements**

Hardness value shall not exceed 300 H VI0 . In case of a single reading slightly (+10 HV) higher than the specified limit, further indentations should be made to check if the high value was an isolated case.

All the hardness values obtained from the heat effected zone shall not exceed 100 HV with respect to the average hardness of the values obtained for the base metal.

If these additional tests mentioned above give a hardness within the specification limit, the slightly higher value may be accepted.

1.6 **Charpy-V-notch Impact Test**

1.6.1 Specimens shall be taken from the position indicated in Fig. 1 of this specification. The test specimens will be prepared in accordance with ISO R 148. Charpy V-notch specimens shall have dimensions as given in Fig. 3 of the specification.

Three test specimens shall be taken from each sample and they shall be cut and worked so that their length is transversal and perpendicular to the weld bead with the notch position as shown in Fig. 4 of this specification. The notch shall be perpendicular to the roller surface. The test specimens width shall depend upon the pipe wall nominal thickness as following :

Nominal wall thickness in mm	Test Specimens width in mm
> 12	12
> 9.5 and ≤ 12	7.5

≥ 7 and ≤ 9.5	5
< 7	2.5

1.6.2 **Test Method**

The test shall be carried out as indicated in ISO R 148 "Beam Impact Test V-notch.

Test pieces shall be immersed in a thermostatic bath and maintained at the test temperature for at least 15 minutes. They shall than be placed in the testing machine and broken within 5 seconds of their removal from the batch.

1.6.3 **Requirements**

The impact energy shall be greater or equal to :-

Test Specimens in mm	Average of Three specimens Joule (min) (Note-2)	Minimum Single Value Joules (Note 1)
10	27	22
7.5	21.5	17.5
5	18.5	15.0
2.5	10.0	8.0

Note:
1) Only one value is permitted to be lower than average upto the value specified.

1.7 **Bend Test Requirements**

The bend test specimens shall be made and tested as per the requirements of API-1104 sixteenth edition - May, 1983 except that the dimensions of Jig for guided bend test fig. 5 para 2.6 API-1104 shall be modified as follows :

Radius of the plunger	°A'	= 2 t
Radius of the die	°B'	= 3 t + 1.6mm
Width of the die	°C'	= 50.8

The acceptance criteria shall however be as per para 2.643 and 2.653 of API-1104 sixteenth edition - May, 1983.

Note t = Thickness of Specimen (nominal)

ANNEXURE-3

1.0 ULTRASONIC INSPECTION

In addition to the radiographic inspection ultrasonic inspection is required as per conditions mentioned in **Annexure-1** of this specification.

This section concerns manual ultrasonic inspection. However ultrasonic inspection by automatic equipment may be used if approved by the COMPANY.

1.1 Equipment and Operators

The CONTRACTOR who carries out the ultrasonic inspection shall have sufficient qualified personnel, equipment and instrument at his disposal to be able to effect the tests without hindering or delaying the pipeline assembly operations.

- Calibrate the equipment;
- Perform an operational test under production conditions;
- Interpret the screen picture;
- Evaluate the size and location of reflectors
- Interpret the type of defects detected.

The COMPANY has the option of checking the ability of personnel employed for ultrasonic testing by means of qualification tests.

The CONTRACTOR appointed to carry out UT inspection shall supply the instruments necessary for their execution on site.

1.2 Specification for Ultrasonic Testing Procedure

Qualification

Before work begins the CONTRACTOR shall present a specification describing the proposed U.T. procedure qualification.

This specification shall be state, as an indication only but not limited to the following information :

- Type of U.T. equipment used
- Type and dimensions of transducers
- Frequency range
- Details for calibration
- Coupling medium
- Inspection technique
- Record details
- Reference to the welding procedure where it is intended to adopt the specification.
- Temperature range of the joints to be inspected.

1.3 **Qualification of Ultrasonic Inspection Procedure**

The ultrasonic inspection procedure shall be approved by the COMPANY. Before inspection begins, the COMPANY may require the qualification test of the ultrasonic inspection procedure. This specification test consists in testing (under normal operating conditions) some CONTRACTOR welds made according to the same production procedure, when there are typical defects the test intends to detect.

1.4 **Test Procedure**

Circumferential weld shall be inspected from both sides using angled. Probes.

The surface with which the probe comes into contact shall be free of metal spatter, dirt, iron oxide and scales of any type: therefore it shall be necessary to clean a strip at least 50mm wide on both sides of the weld with steel - wire brushes and anyhow the cleaned strip must be atleast wide enough to allow full skip examination.

If during the test, echoes of doubtful origin appear, it shall be necessary to inspect a convenient area on the pipe surface, close to the weld, with a straight beam transducer in order to check whether any manufacturing defects are present which could have interfered with the ultrasonic beam.

By way of an example, the equipment shall include but not be limited to the following :

- Ultrasonic equipment and coupling medium
- Sample sections for calibration of instruments.
- Equipment for cleaning of surface to be examined.
- Rulers calibrated in centimeters for exact location of the position of defects.

The characteristics of the above-listed instruments and equipment shall guarantee:

a) that the required standards of the inspection procedure, as previously established and approved by the COMPANY, are satisfied.

b) continuous operation

All the instruments and equipment shall be approved by the COMPANY before being used. The COMPANY has the authority to reject any item which is considered unsuitable. The decision of the COMPANY is final. The CONTRACTOR appointed to carry out ultrasonic inspection shall also ensure the operational efficiency and maintenance of the instruments and equipment, and shall immediately substitute any item rejected by the COMPANY.

All the instrument and equipment necessary for carrying out ultrasonic inspection on site shall satisfy the requirements laid down by the public board of institutions which regulate "safety at work".

1.5 **Ultrasonic Instruments**

The ultrasonic instruments :

- Shall be each pulse type, able to generate, receive and display, on the screen a cathode ray tube (CRT) pulse, at frequencies between 1 and 6 mhz. The useful part of the CRT screen shall be at least 70m wide and at least 50mm high.
- Shall have various amplification, with steps of 1 or 2 dB over a range of a least 60 dB.
- The regulation control shall be accurate to within 1 dB and this accuracy shall be certified by the instrument manufacturer.
- May be powered by a battery or an electric generator. In the first case, the autonomy of operation (endurance) of the instrument shall be sufficient to carry on working without frequent interruptions, and the instrument shall be equipped with an automatic switch which switches it off when the battery runs down, in the second case, there must be a voltage stabilising device with a tolerance of 2 volts.

1.6 **Probes**

The probes used shall have dimensions, frequencies, and a refraction angle suited to the type of steel, the diameter the thickness of the pipeline and to the joint design.

1.7 **Reference Sample Pieces**

The efficiency of the equipment used, the effective refraction angle of the probe, and the beam output points, shall be checked using a V_1 and V_2 sample block, IIW type or the calibration block ASTM E-428.

For the calibration of runs and the regulation of detection sensitivity during the test, a calibration piece be used. This piece shall be taken from the production material, and will be at least 150mm long (measured in the direction of the axis), and at least 50mm wide (measured in the direction of the circumference), (see Fig. 4 of this specification).

In the middle of the inside and the outside surface of the calibration piece a groove shall be made. The groove will have a rectangular cross-section, a flat bottom and the following dimensions :-

- Depth : 1 +/- 0.1mm
- Breadth (measured parallel to the 150mm side) : 1 +/- 0.1mm
- Length (measured parallel to the 50mm side) not less than 30mm.

In addition, the calibration piece shall have a hole, 2mm in diameter, passing through its thickness and positioned so that during calibration the echoes returning from the two grooves do not interfere with those returning from the hole.

1.6 **Calibration**

For a precise check of the sound paths necessary for a full inspection of the weld joint, the probe shall be moved (half skip and full skip distance) until internal and external notches on the test piece are detected (see Fig. 5 of this specification).

The relevant defect limits the path lengths on the time base. The calibration of reference sensitivity is obtained by utilising the through drilled test hole in the thickness of the reference block to draw the distance amplitude correction curve relevant to the test probe.

Calibration shall be carried out according to the following procedure : place its internal vertex until the maximum height of echo is displayed on the screen; this echo is adjusted to 80% of full screen height by means of the sensitivity adjuster set in dB. Without varying the amplification, the probe placed at full skip distance from the hole is moved to detect the external vertex the hole until the maximum height of echo is obtained. The straight line connecting the peaks of the two echoes obtained by the above procedure, represents the 100% reference level, while the one connecting the two points at half height of the same echoes represents "50% reference level".

The two straight lines shall be marked on the screen with a pen. Calibration shallbe repeated each time tests are re-started at intervals not longer than 30 minutes during normal operations; each time the conditions fixed in advance are altered. This calibration is applicable provided that the crystal of the probe is 8 x 9mm size. Should this size of the crystal be different, the value of the sensitivity obtained from the calibration by a crystal of a different size shall be brought to the value of sensitivity obtained from the calibration by a 8 x 9mm crystal. The sensitivities of the two different size probes shall be compared through the echoes obtained on the notch of the test piece with the probe position at half skip of the distance.

1.9 **Regulation of Amplification during Production Testing**

The amplification during production testing shall be obtained by adding 2-6 dB (according to the surface condition of the pipe and its cleanness) to the reference amplification.

1.10 **Qualification of Ultrasonic Testing Operators**

Before the inspection begins or during the same inspection, the COMPANY may require a qualification test for the ultrasonic equipment operators.

1.11 **Evaluation of Indications given by Ultrasonic Tests**

Each time that echoes from the weld bead appear during production testing, the instrument amplification shall be altered to coincide with the reference amplifications and the probe shall be moved until maximum respond is obtained paying attention all the time to the probetube coupling.

If, under these conditions, the height of the defer echo is equal to or greater than that of the reference echo, the defect shall be evaluated. If the defect has also been detected by the radiographic and or visual examination, the dimensions shall be judged according to the type of examination which detects the greater defects. Returns which are less than 50% of the reference echo, will not be considered. It returns are above 50% but lower than 100% of the reference echo, and if the operator has good reasons to suspect that the returns are caused by unfavorably oriented cracks, he shall inform the COMPANY. Moreover, when there is a defect to be repaired such defect shall be removed for a length corresponding to the one where no more return echo is given.

1.12 **Other Equipment**

The use of rules calibrated in centimeters, attached if possible to the probe, for the precise location of the position of welding defects, it recommended. Defect location is effected by measuring the projection distance between the probe output and the reflecting surface.

The operators carrying out the tests shall have besides the probing instrument, tools for cleaning the pipe surface (files, brushes, etc.) as well as the coupling liquid or paste appropriate for the temperature of the section to be examined.

ANNEXURE-4

RADIOGRAPHY

1.0 **SCOPE**

This annexure covers the radiographic inspection of all types of welded joints of the main pipeline. The welded joints shall include the following :

i) Full girth welds on the mainline construction including double jointing of pipe, if adopted.

ii) Welds for installation of block valves, insulating joints and other appurtenances and tie-ins.

iii) Welds at scraper launching and receiving barrels

iv) Terminal Piping.

2.0 **APPLICABLE STANDARDS**

This specification shall apply in conjunction with the following (all latest edition) :

i) API 1104, Standard for welding pipelines and related facilities.

ii) ANSI B31.8, code for Gas Transmission and Distribution Piping Systems.

iii) ANSI B31.4, Code for Liquid Petroleum Transportation Piping System.

iv) ASTM E94, Recommended practice for Radiographic Testing.

v) ASTM, E 142, Standard Method for Controlling Quality of Radiographic Testing.

vi) The American Society for non-destructive Testing. Recommended Practice No. SNT-TC-1A Supplement-A.

3.0 **PROCEDURE**

3.1 The radiographic examination procedure to be adopted shall be submitted by the CONTRACTOR as per **Exhibit-F.**

3.2 The procedure of radiographic examination shall be qualified to the entire satisfaction of COMPANY prior to use. It shall include but not be limited to the following requirements.

i) Lead foil intensifying screens, at the rear of the film shall be used in all exposures.

ii) Type 2 and 3 films as per ASTM E-94 shall be used.

iii) A densitometer shall be used to determine film density. The transmitted film density shall be 2.0 and 3.5 through out the weld. The unexposed base density of the film shall not exceed 0.30.

iv) Radiographic identification system and documentation for radiographic interpretation reports and their recording system.

3.3 The CONTRACTOR shall qualify each procedure in the presence of the COMPANY prior to use.

3.4 The procedure of radiographic examination shall produce radiographs of sufficient density, clarity and contrast so that defects in the weld or in the pipe adjacent to the weld, and the outline and holes of the pentrameter are clearly discernible.

3.5 All the girth welds of mainline shall be subjected to 100% radiographic examination. The CONTRACTOR shall furnish all the radiographs to the COMPANY, immediately after processing them, together with the corresponding interpretation reports on approved format. The details of the radiographs alongwith the joint identification number shall be duly entered in a register and signed by the CONTRACTOR and submitted to the COMPANY for approval.

3.6 When the radiation source and the film are both on the outside of the weld and located diametrically opposite each other, the maximum acceptable length of film for each exposure shall not exceed the values given in Table 4 of API 1104. The minimum film overlap, in such cases, shall be 40mm. The ellipse exposure technique may be used on nominal pipe sizes of 2 inch and smaller provided that the source to film distance used is a minimum of 12 inches.

3.7 Three copies of each acceptable radiographic procedure (as outlined in Specification no. MEC/S/O5/62/02) and three copies of radiographic qualification records, shall be supplied to COMPANY. One set of the qualifying radiographs on the job shall be kept by the CONTRACTOR's authorised representative to be used as a standard for the quality of production radiographs during the job. The other two sets shall be retained by COMPANY for its permanent record.

3.8 Three copies of the exposure charts relating to material thickness, kilo voltage, source to film distance and exposure time shall also be made available to aCOMPANY by the CONTRACTOR.

3.9 The CONTRACTOR shall, on a daily basis, record for each radiograph (1) radiography number (2) approximate chainage of weld location, (3) whether or not the welds meet the specified acceptance standards and (4) the nature and approximate location of unacceptable defects observed. It must be possible to relate to a particular butt weld and welder on piping drawing and pipeline alignment drawing.

3.10 Each day's production of processed radiographs shall be properly packaged separately, identified by at least the (1) date, (2) radiographic unit, (3) job locations, (4) starting and ending progress survey stations and (5) shall include original and three copies of the daily radiographic record. The package shall be submitted to the COMPANY daily when possible, but in no event later than noon of the following day.

3.11 The CONTRACTOR shall provide all the necessary facilities at site, such as a dark room with controlled temperature, film viewer etc. to enable the COMPANY to examine the radiographs.

3.12 The CONTRACTOR, if found necessary, may modify the procedure of radiographic examination suiting the local conditions prevailing. This shall, however, be subject to the approval of the COMPANY.

3.13 COMPANY shall have free access to all the CONTRACTOR's work facilities in the field.

3.14 Any approval granted by the COMPANY shall not relieve the CONTRACTOR of his responsibilities and guarantees.

4.0 RADIATION SOURCE

4.1 Radiographic examination shall be carried out using x-radiations. Radiographic examination by Gamma rays may be allowed, at the discretion of the COMPANY, in case of inaccessible joints.

4.2 Whenever possible, pipeline welds will be inspected by placing the radiation source inside the pipe, on the pipeline axis, with a radiation of 6.28 rad. (360°).

If it is impossible to place the radiation source inside the pipe, the weld will be inspected with the source on the outside. An overlap of at least 40mm at the ends of each film shall be required to ensure that the first and last location increment numbers are common to successive films and to establish that no part of a weld has been omitted.

5.0 LEVEL OF QUALITY

The quality level of radiographic sensitivity required for radiographic inspection shall be at least equivalent to the values in Figure-6.

6.0 PENETRAMETERS

6.1 The image quality indicator (abbreviation : IQI) shall be used for the qualification of the welding procedure and during normal line production. Radiographic sensitivity shall be measured with the wire image quality indicator (Penetrameter). The penetrameter shall be selected according to DIN 54109 or ISO 1027. For radiographs made with the source on the outside, a penetrameter shall be placed on each side of the film with the smaller wire of the penetrameter turned towards the end of the film itself. When a complete weld is radiographed in a single exposure using a source inside the piping,

four penetrameters approximately equally spaced around the circumference shall be used. During the procedure qualification, IQI shall be placed both on the source side and on the film side. The sensitivity obtained with IQI on the source side shall not be less than the values shown in Fig. 6 of this specification.

The sensitivity limit may be considered to have been reached when the outline of the IQI, its identification number and the wire of the required diameter show up clearly on the radiographs.

The COMPANY may authorise use of types of IQI other than those planned, provided that they conform with recognised standards and only if the CONTRACTOR is able to demonstrate that the minimum sensitivity level required is obtained. For this demonstration, a test shall be carried out comparing the IQI specified and the CONTRACTOR's to show up the identification number and other details of the proposed IQI, which must be visible in the test radiograph.

7.0 FILM IDENTIFICATION MARKERS

All films shall be clearly identified by lead numbers, letters, and/ or markers. The image of the markers shall appear on the films, without interfering with the interpretation. These markers positions shall also be marked on the part to be radiographed and shall be maintained during radiography.

8.0 PROTECTION AND CARE OF FILM

8.1 All unexposed films shall protected and stored properly as per the requirements of API 1104 standard and ASTM E 94.

8.2 The exposed and unexposed film shall be protected from heat, light, dust and moisture. Sufficient shielding shall be supplied to prevent exposure of film to damaging radiation prior to and following the use of the film for radiographic exposure.

9.0 RE-RADIOGRAPHY

9.1 The weld joints shall be re-radiographed in case of unsatisfactory quality of the radiographs, at the expense of the CONTRACTOR.

9.2 All the repaired weld joints shall be re-radiographed at no extra cost to the COMPANY in the same manner as that followed for the original welds. In addition, the repaired weld area shall be identified with the original identification number plus the letter `R' to indicate the repair.

9.3 When evaluating repair film, radiographers shall compare each section (exposure) of the weld with the original film to assure repair was correctly marked and original defect removed.

9.4 The COMPANY will review prior to any repair of welds, all the radiographs of welds which contain, according to the CONTRACTOR's interpretation, unacceptable defects.

The final disposition of all unacceptable welds shall be decided by the COMPANY.

10.0 QUALIFICATION OF RADIOGRAPHERS

10.1 Pipeline radiographers shall be qualified in according with the requirement of API 1104 and to the full satisfaction of COMPANY.

10.2 Certification of all the radiographers, qualified as per 10.1 above, shall be furnished by the CONTRACTOR to the COMPANY before a radiographer will be permitted to perform production radiography. The certificate record shall include :

i) Background and experience record
ii) Training course record
iii) Technical examination record
iv) Doctor's report on radiographer's Oaecuer 0-1 acquity eye test.
v) Date of qualification.

10.3 The radiographers shall be required to qualify with each radiographic procedure they use, prior to performing the work assigned to him in accordance with the specification.

11.0 PRESERVATION OF RADIOGRAPHS

11.1 The radiographs shall be processed to allow storage of films without any discoloration for at least three years. All the radiographers shall be presented in suitable folders for preservation alongwith necessary documentation.

11.2 All radiographs shall become property of the COMPANY.

12.0 EQUIPMENT AND ACCESSORIES

12.1 CONTRACTOR shall make necessary arrangement at his own expense, for providing the radiographic equipment, radiographic films and the accessories for carrying out the radiographic examination for satisfactory and timely completion of the job.

12.2 For carrying out the mainline radiographic examination the CONTRACTOR shall be equipped with suitable mobile/ stationary type with rooms. These shall have all the required facilities for film processing. Film viewer used shall be equipped with the film illuminator that has a light source of sufficient intensity and can be suitably controlled to allow viewing film densities upto 4.0 without damaging the film.

13.0 RADIATION PROTECTION

13.1 CONTRACTOR shall be responsible for the protection and personal monitoring of every man with or near radiation sources.

13.2 The protection and monitoring shall comply with local regulations.

13.3 In view of visual hazards in the handling of radioactive source of material, CONTRACTOR shall be solely responsible for complying with all rules and regulations set forth by Atomic Energy Commission or any other Government agencies of India in this regard and COMPANY shall not be responsible and shall be kept indemnified by the CONTRACTOR for default(s) of whatever nature by the Contractor. Safety equipment as considered adequate by the COMPANY for all necessary personnel shall be made available for use and maintained for immediate and proper use by the CONTRACTOR.

14.0 DISPLAY OF SAFETY INSTRUCTIONS

14.1 The safety provisions shall be brought to the notice of all concerned by display on a notice board at prominent place at the work spot. The person responsible for the "safety" shall be named by the CONTRACTOR.

15.0 ENFORCEMENT FOR SAFETY REGULATIONS

15.1 To ensure effective enforcement of the rules and regulations relating to safety precautions, the arrangement made by the CONTRACTOR shall be open to inspection by COMPANY or its representatives.

16.0 FIRST AID INDUSTRIAL INJURIES

16.1 CONTRACTOR shall maintain first aid facilities for its employees and those of its sub-contractors.

16.2 CONTRACTOR shall make outside arrangements for ambulance service and for treatment of industrial injuries. Names of those providing these services shall be furnished to COMPANY prior to start of work and their telephone no. shall be posted prominently in CONTRACTOR's field office.

16.3 All critical industrial injuries shall be reported promptly to the COMPANY and a copy of CONTRACTOR's report covering each personal injury requiring the attention of physician shall be furnished to the COMPANY.

17.0 NO EXEMPTION

17.1 Not withstanding the above there is nothing in these clauses to exempt the CONTRACTOR from the operation of any other act or rules in force.

Rev. : 0
Edition : 1

SPECIFICATION
FOR
SHOP & FIELD PAINTING

SPECIFICATION NO.: MEC/S/05/21/07

(OIL & GAS SBU)
MECON LIMITED
DELHI 110 092

MECON LIMITED REGD. OFF: RANCHI 834002	STANDARD TECHNICAL SPECIFICATION OIL & GAS SBU, DELHI		
TITLE	**SHOP & FIELD PAINTING**	DOCUMENT NO. **MEC/S/05/21/07**	Page 1 of 1 REVISION : 0 EDITION : 1

CONTENTS

SL. NO.	DESCRIPTION
1.0	GENERAL
2.0	SCOPE
3.0	CODES & STANDARDS
4.0	EQUIPMENT
5.0	SURFACE PREPARATION
6.0	PAINT MATERIALS
7.0	PAINTING SYSTEMS
7.1	PRE-ERECTION/ PRE-FABRICATION AND SHOP PRIMING FOR CARBON STEEL, LOW TEMPERATURE CARBON STEEL & LOW ALLOY STEEL, STEEL STRUCTURES, PIPING AND EQUIPMENT ETC.
7.2	REPAIR OF PRE-ERECTION/ FABRICATION AND SHOP PRIMING AFTER ERECTION/ WELDING FOR CARBON STEEL, LOW TEMPERATURE CARBON STEEL & LOW ALLOY STEEL, ITEMS IN ALL ENVIRONMENTS.
8.0	FIELD PAINT SYSTEM FOR NORMAL CORROSIVE ENVIRONMENT (FOR CARBON STEEL, LOW TEMPERATURE CARBON STEEL & LOW ALLOY STEEL)
9.0	FIELD PAINT SYSTEM FOR CORROSIVE ENVIRONMENT (FOR CARBON STEEL, LOW TEMPERATURE CARBON STEEL AND LOW ALLOY STEEL)
10.0	FIELD PAINT SYSTEM FOR HIGHLY CORROSIVE AREA (FOR CARBON STEEL, LOW ALLOY STEEL) EXTERNAL SURFACE OF UNINSULATED COLUMNS, VESSELS, HEAT EXCHANGERS, BLOERS, PIPING, PUMPS, TOWERS, COMPRESSORS, FLARE LINES, STRUCTURAL STEEL ETC.
11.0	FIELD PAINT SYSTEM FOR CARBON STEEL STORAGE TANKS (EXTERNAL) FOR ALL ENVIRONMENTS
12.0	FIELD PAINT SYSTEM FOR CARBON STEEL AND LOW ALLOY STEEL STORAGE TANK (INTERNAL)
13.0	COATING SYSTEM FOR EXTRNAL SIDE OF UNDERGROUND CARBON STEEL, PLANT PIPING AND TANKS.
14.0	PAINTING UNDER INSULATION FOR (HOT, COLD & SAFETY) CARBON STEEL LOW TEMPERATURE CARBON STEEL & STAINLESS STEEL PIPING AND EQUIPMENT IN ALL ENVIRONMENT
15.0	INTERNAL PROTECTION OF CARBON STEEL WATER BOXES AND TUBE SHEETS OF COOLERS/ CONDENSERS.
16.0	FIELD PAINTING SYSTEM FOR GI TOWERS/ NON-FERROUS TUBE SHEET
17.0	STORAGE
18.0	COLOURS CODE FOR PIPING
19.0	IDENTIFICATION OF VESSELS, PIPING ETC.
20.0	PAINTING FOR CIVIL DEFENCE REQUIREMENTS
21.0	INSPECTION AND TESTING
22.0	GUARANTEE
23.0	QUALIFICATION CRITERIA O PAINTING CONTRACTOR.
24.0	PROCEDURE FOR APPROVAL OF NEW PAINT MANUFACTURERS.

ANNEXURE-I- LIST OF RECOMMENDED MANUFACTURES

ANNEXURE-II- LIST OF RECOMMENDED MANUFACTURE'S PRODUCTS.

PREPARED BY:	CHECKED BY:	APPROVED BY:	ISSUE DATE :
(Shalini Singh)	(Sunil Kumar)	(A.K. Johri)	Dec. 2008

1.0 **GENERAL**

1.1 These technical specifications shall be applicable for the work covered by the contract, and without prejudice to the various codes of practice, standard specifications etc. it is understood that contractor shall complete the work in all respects with the best quality of materials and workmanship and in accordance with the best engineering practice and instructions of Engineer-in-charge.

1.2 Wherever it is stated in the specification that a specific material is to be supplied or a specific work is to be done it shall be deemed that the same shall be supplied or carried out by the contractor.

Any deviation from this standard without within deviation permit from appropriate authority will result in rejection to job.

2.0 **SCOPE**

Scope of work covered in the specification shall include, but not limited to the following.

2.1 This specification defines the requirements for surface preparation, selection and application of paint on external surfaces of equipment, vessels, machinery, piping, ducts, steels structures, external & internal protection of storage tanks for all services RCC Chimney & MS Chimney with or without refractory lining and flare lines etc.

2.2 **Extent of Works**

2.2.1 The following surface and materials shall require shop, pre-erection and field painting.

a. All uninsulated C. S. & A.S. equipment like columns, vessels, drums, storage tanks, heat exchangers, pumps, compressors, electrical panels and motors etc.

b. All uninsulated carbon and low alloy piping fitting and valves (including painting of identification marks), furnace, ducts and stacks.

c. All items contained in a package unit as necessary.

d. All structural steel work, pipe, structural steel supports, walkways, handrails, ladders, platforms etc.

e. RCC/ MS chimneys with or without refractory lining & Flare lines.

f. Identification colour bands on all piping as required including insulated aluminium clad, galvanised, SS and non-ferrous piping.

g. Identification lettering/ numbering on all painted surface of equipment/ piping insulated aluminium clad, galvanised, SS and non-ferrous piping.

h. Marking/ identification signs on painted surfaces of equipment/ piping for hazardous service.

i. Supply of all primers, paints and all other materials required for painting other than owner's supply.

j. Over insulation surface of equipments and pipes wherever required.

k. Painting under insulation for carbon steel and stainless steel as specified.

l. Repair work of damaged/ preerection/ fabrication shop primer and weld joints at field.

2.2.2 The following surface and materials shall not be painted unless otherwise specified:

a. Uninsulated austentic stainless steel.

b. Plastic and/ or plastic coated materials.

c. Non ferrous materials like aluminium, galvanised "piping", "gratings" and "handrails" etc. except G. I. Towers.

2.3 Documents

2.3.1 The contractor shall perform the work in accordance with the following documents issued to him for executions of work.

a. Bill of quantities for piping, equipment, machinery and structure etc.

b. Piping line list.

c. Painting specifications including special civil defence requirement.

2.4 Unless otherwise instructed final painting on pre-erection/ shop primed pipes and equipments shall be painted in the field, only after mechanical completion and testing on system are completed as well as, after completion of steam purging wherever required.

2.5 Changes and deviations required for any specific job due to clients requirement or otherwise shall be referred to MECON for deviation permit.

3.0 CODES & STANDARDS

3.1 Without prejudice to the provision of clause 1.1 above and the detailed specifications of the contract, the following codes and standards shall be followed for the work covered by this contract.

IS:5	:	Colour coding
IS-101	:	Methods of test for ready mixed paint and enamels.
IS-2379:1990	:	Indian standard for pipe line Identification –Colour code.
ASTM Vol. 6.01 and 6.03	:	American standard test methods for Paints and coatings.
ANSI A 13.1-1981	:	Scheme for Identification of piping systems : American National Standard Institution.

3.2 Surface Preparation Standards:

Following standards shall be followed for surface preparations:

3.2.1 Swedish Standard : SIS-05 5900-1967/ ISO-8501-1-1998
(Surface preparation standards for painting steel surfaces).

This standard contains photographs of the various standards on four different degrees of rusted steel and as such is preferable for inspection purpose by the Engineer-in-Charge.

3.2.2 Steel structure painting Council, U.S.A (surface preparations specifications (SSPC-SP).

3.2.3 British standard (surface finish or Blast-cleaned for painting) BS:4232

3.2.4 National Associations of Corrosion Engineers, U.S.A. (NACE)

3.2.5 Various International Standards equivalent to swedish Standard for surface preparation are given in Table-I.

3.3 The contractor shall arrange, at his own cost, to keep a set of latest edition of any one of the above standards and codes at site.

3.4 The paint manufacturer's instructions shall be followed as far as practicable at all times. Particular attention shall be paid to the following:

a. Instructions for storage to avoid exposure as well as extremes of temperature.

b. Surface preparations prior to painting.

c. Mixing and thinning.

d. Application of paints and the recommended limit on time intervals between coats.

4.0 EQUIPMENT

4.1 All tools, brushes, rollers, spray guns, abrasive materials hand/ power tools for leaning and all equipments, scaffolding materials, shot/ wet abrassive blasting, water blasting equipments & air compressors etc. required to be used shall be suitable for the work and all in good order and shall be arranged by the contractor at site and in sufficient quantity.

Mechanical mixing shall be used for paint mixing operations in case of two pack systems except that the Engineer-in-Charge may allow the hand mixing of small quantities at his discretion.

5.0 SURFACE PREPARATION, SHOP COAT, COATING APPLICATION & REPAIR AND DOCUMENTATION

5.1 General

5.1.1 In order to achieve the maximum durability, one or more of following methods of surface preparation shall be followed, depending on condition of steel surface and as instructed by Engineer-in-Charge. Adhesion of the paint film to surface depends largely on the degree of cleanliness of the metal surface. Proper surface preparation contributes more to the success of the paint protective system:

a. Manual or hand tools cleaning.
b. Mechanical or power tool cleaning.
c. Blast cleaning.

5.1.2 Mill scale, rust, rust scale and foreign matter shall be removed fully to ensure that a clean and dry surface is obtained. The minimum acceptable standard in case of manual or hand tool cleaning shall be St. 2 or equivalent, in case of mechanical or power tool cleaning it shall be St. 3 or equivalent, in case of blast cleaning it shall be Sa 2½ or equivalent as per Swedish Standard SIS-055900-1967/ ISO-8501-1-1988. Where highly corrosive condition exits, then blast cleaning shall be Sa3 as per Swedish Standard.

Remove all other contaminants, oil, grease etc. by use of an aromatic solvent prior to surface cleaning.

5.1.3 Blast cleaning shall not be performed where dust can contaminate surfaces undergoing such cleaning or during humid weather conditions having humidity exceeding 85%.

5.1.4 Irrespective of the method of surface preparation, the first coat of primer must be applied on dry surface. This should be done immediately and in any case within 4 hours of cleaning of surface. However, at times of unfavourable weather conditions, the Engineer-in-Charge shall have the liberty to control the time period, at his sole discretion and / or to insist on recleaning, as may be required, before primer application is taken up. In general, during unfavourable weather conditions, blasting and painting shall be avoided as far as practicable.

5.1.5 The external surface of R.C.C. chimney to be painted be dry and clean. Any loose particle of stand, cement, aggregate etc. shall be removed by rubbing with soft wire brush if necessary, acid etching with 10-15% HCL solution about 15 minutes shall be carried out and surface must be thoroughly washed with water to remove acid & loose particles then dry completely before application of paint.

5.2 Procedure of Surface Preparation.

5.2.1 Blast Cleaning

5.2.1.1 Air Blast Cleaning

The surface shall be blast cleaned using one of the abrasives: AL_20_2 particles chilled casts iron or malleable iron and steel at pressure of 7kg. Cm^2 at appropriate distance and angle depending on nozzle size maintaining constant velocity and pressure. Chilled cast iron, malleable iron and steel shall be in the form of shot or grit of size not greater than 0.055" maximum in case of steel and malleable iron and 0.04" maximum in case of chilled iron. Compressed air shall be free form moisture and oil. The blasting nozzles should be venturei style with tungsten carbide or boron carbide as the material for liners. Nozzles orifice may vary from 3/16" to ¾". On completion of blasting operation, the blasted surface shall be clean and free from any scale or rust and must show a grey white metallic lusture. Primer or first coat of paint shall be applied within 4 hours of surface preparation. Blast cleaning shall bot be done outdoors in bad weather without adequate protection or when there is dew on the metal which is to be cleaned, surface profile shall be uniform to provide good key to the paint adhesion (i.e.35to 50μ). If possible vacuum collector shall be installed for collecting the abrasive and recycling.

5.2.1.2 Water Blast cleaning

Environmental, health and safety problems associated with abrassive blast cleaning limit the application of air blast cleaning in many installations. In such case water blast cleaning is resorted to.

Water blast cleaning can be applied with or without abrassive and high-pressure water blasting. The water used shall be inhibited with sodium chromate/ phosphate. The blast cleaned surface shall be washed thoroughly with detergents and wiped solvent and dried with compressed Air. For effective cleaning abrassives are used. The most commonly used pressure for high pressure water blast cleaning for maintenance surface preparation is 3000 to 6000 psi at 35-45 liters/ minute water volume and pressure upto 10000 psi and water volume of 45 liters/ minute provide maximum cleaning.

The wate blast cleaned surface shall be comparable to SSPC-SP-12/ NACE No. 5. The operation shall be carried out as per SSPC guidelines for water blast cleaning. The indicative values for sand injection is

Air : 300 to 400 Cu.ft/ min.

Water	:	5-10 liter/ min. with corrosion inhibitor
Sand	:	200-400 lbs/ hr.
Nozzle	:	0.5 to 1" dia

Special equipments for water blast cleaning with abrasives now available shall be used.

5.2.2 Mechanical of Power tool cleaning

Power tool cleaning shall be done mechanical striking tools, chipping hammers, griding wheels or rotating steels wire-brushes. Excessive burnish of surface shall be avoided as it can reduce paint adhesion. On completion of cleaning, the detached rust mill scale etc. shall be removed by clean rags and/ or washed by water or stream and thoroughly dried with compressed air jet before application of paint.

5.2.3 Manual or hand tool cleaning

Manual or hand tool cleaning is used only where safety problems limit the application of other surface preparation procedure and hence dones not appear in the specifications of paint systems.

Hand tool cleaning normally consists of the following:

a. Hand descaling and/ or hammering
b. Hand scraping
c. Hand wire brushing

Rust, mill scale spatters, old coating and other foreign matter, shall be removed by hammering, scrapping tools, emery paper cleaning, wire brushing or combination of the above methods. On completion of cleaning, loose materials shall be removed from the surface by clean rags and the surface shall be brushed, swept, deducted and blown off with compressed air/ steam to remove all loose matter. Finally the surface may be washed with water and dried for effective cleaning.

5.3 **Non compatible shop coat primer**

The compatibility of finishing coat should be confirmed from the paint manufacturer. In the event of use of primer such as zinc rich epoxy, inorganic zinc silicate etc. as shop coat the pant system shall depend on condition of shop coat, if shop coat is in satisfactory condition showing no major defects, the shop

coat shall not be removed. The touch up primer and finishing coat(s) shall be identified for application by Engineer-in-Charge.

5.4 Shop coated (coated with primer & finishing coat) equipment should not be repainted unless paint is damaged.

5.5 Shop primed equipment and surface will only be 'spot cleaned' in damaged areas by means of power tool brush cleaning and then spot primed before applying one coat of filed primer unless otherwise specified. If shop primer is not compatible with field primer then shop coated primer should be completely removed before applications of selected paints system for particular environment.

5.6 For packaged units/ equipment, shop primer should be as per the paint system given in this specification. However, manufacturer's standard can be followed after review.

5.7 **Coating Procedure and Application:**

5.7.1 Surface shall not be coated in rain, wind or in environment where injurious airbone elements exists, when the steel surface temperature is less than 5° F above dew point when the relative humidity is greater then 85% or when the temperature is below 40° F.

5.7.2 Blast cleaned surface shall be coated with one complete application of primer as soon as practicable but in no case later than 4 hrs. the same day.

5.7.3 To the maximum extent practicable, each coat of material shall be applied as a continuous film uniform thickness free of probes. Any spots or areas missed in application shall be recoated and permitted to dry before the next coat is applied. Applied paint should have the desired wet film thickness.

5.7.4 Each coat shall be proper state of cure or dryness before the application of succeeding coat. Material shall be considered dry for recoating when an additional coat can applied without the development of any detrimental film irregularities such as lifting or loose of adhesion of the under coat. Manufacturer instruction shall be followed for intercoat interval.

5.7.5 When the successive coat of the same colour have been specified, alternate coat shall be tinted, when practical, sufficiently to produce enough contrast to indicate complete coverage of the surface. The tinting material shall be compatible with the material and not detrimental to its service life.

5.7.6 Air spray application shall be in accordance with the following:

a. The equipment used shall be suitable for the intended purpose, shall be capable of properly atomizing the paint to be applied, and shall be equipped with suitable pressure regulators and gauges. The air caps, nozzles, and needles shall be those recommended by the manufacturer of the equipment for the material beign sprayed. The equipment shall be kept in satisfactory condition to permit proper paint application.

b. Traps or separators shall be provided to remove oil and condensed water from the air. These traps or separators must be of adequate size and must be drained periodically during operations. The air from the spray gun impinging against the surface shall show condensed water or oil.

c. Ingredients shall be kept properly mixed in the spray pots or containers during application by continuous mechanical agitation.

d. The pressure on the material in the pot and of the air at the gun shall be adjusted for optimum spraying effectiveness. The pressure on the material in the pot shall be adjusted when necessary for change in elevation of the gun above the pot. The atomizing air pressure at the gun shall be high enough to properly atomize the paint but not so high as to cause excessive fogging of paint, excessive evaporation of solvent, or less by overspray.

e. Spray equipment shall be kept sufficiently clean so that dirt, dried paint, and other foreign materials are not deposited in the paint film.

Any solvents left in the equipment shall be completely removed before applying paint to the surface begin painted.

f. Paint shall be applied in a uniform layer, with overlapping at the edge of the spray pattern. The spray patterns shall be adjusted so that the paint is deposited uniformly. During application the gun shall be held perpendicular to the surface and at a distance which will ensure that a wet layer of paint is deposited on the surface. The trigger of the gun should be released at the end of each stroke.

g. All runs and sags shall be brushed out immediately or the paint shall be removed and the surface repainted.

h. Areas inaccessible to the spray gun shall be painted by brush: if not accessible by brush, daubers or sheepking shall be used.

i. All nameplates, manufacturer's identification tags, machined surface instrument glass, finished flange faces, control valve items and similar items shall be masked to prohibit coating disposition. If these surface are coated, the component shall be cleaned and restored to its original condition.

j. Edges of structural shapes and irregular coated surface shall be coated first and an extra pass made later.

k. If spray gun shown choking, immediately dechoking procedure shall be followed.

5.7.7 Airless spray application shall be in accordance with the following procedure: as per steel structure paint manual vol. 1 & vol. 2. By SSPC, U.S.A., Air less spray relies on hydraulic pressure rather than air atomization to produce the desired spray. An air compressor or electric motor is used to operate a pump to produce pressures of 1,000 to 6.000 psi. Paint is delivered to the spray gun at this pressure through a single hose within the gun, a single paint stream is divided into separate streams, which are forced through a small orifice resulting in atomization of paint without the use of air. This result in more repaid coverage with less overspray. Airless spray usually is faster, cleaner, more economical and easier to use than conventional airspray.

Airless spray equipment is mounted on wheels, and paint is aspirated in a hose that sucks paint from any container, including drums. The unit shall have in built agitator that keep the paint uniformly mixed during the spraying. The unit shall consists of in built strainer. Usually very small quantities of thinning is required before spray. Incase of High Build epoxy coating (two pack), 30:1 pump ratios and 0.020-0.023" tip size will provide a good spray pattern. Ideally fluid hoses should no be less than 3/8" ID and not longer than 50ft to obtain optimum results.

In case of gun choking, decoking steps shall be followed immediately.

5.7.8 Brush application of paint shall be in accordance with the following:

a. Brushes shall be of a style and quality that will enable proper application of paint

b. Round or oval brushes are most suitable for rivets, bolts, irregular surfaces and rough or pitted steel. Wide flat brushes are suitable for large flat areas, but they shall not have width over five inches.

c. Paints shall be applied into all corners.

d. Any runs or sags shall be brushed out.

e. There shall be minimum of brush marks left in the applied paint

f. Surface not accessible to brushes shall be painted by spray, duubers, or sheepkin.

5.7.9 Manual application by sling (where 6 O' clock position of pipe is not approachable)

A canvas strip (alternatively a tinplate strip) about 450mm wide and 1.5m longs is hold under the pipe by two men. Liquid coating poured on the sling at each side of the pipe. The men holding this sling move it up and down and walk slowly forward while fresh coating is poured on the pipe and they manipulate the sling so that an even coating is ontained all round the bottom. This work shall be done vey carefully and by experienced personnel. There shall bot be any formation of "Whiskers" and holes in the coating. The coating film shall be inspected by mirror.

5.7.10 For each coat the painter should know the WFT corresponding to the specified DFT and standardise the paint application technique to achieve the desired WFT. This is to be ensured in the qualification trial.

5.8 **Drying of Coated Surface**

5.8.1 No coat shall be applied unit the preceding coat has dried. The material shall be considered dry for re-coating when another coat can be applied without the development of any film irregularities such as lifting or loss of adhesion of undercoats. Drying time of the applied coat should not exced maximum specified for it as a first coat; if it exceeds the paint material has possible deteriorated or mixing is faulty.

5.8.2 No paint shall be force dried under condition which will cause checking, wrinkling blistering formation of pores, or detrimentally after the condition of the paint.

No drier shall be added to a paint on the job unless specifically called for in the manufacturer's specification for the paint.

Paint shall be protected from rain, condensation, contamination snow and freezing until dry to the fullest extent practicable.

5.9 **Repair of damaged paint surface.**

5.9.1. Where paint has been damaged in handling and in transportation, the repair of damaged coating of pre-creation/ fabrication shall be as given below.

5.9.2. Repair of damaged inorganic zinc silicate primer after erection/ weldding:

Quickly remove the primer from damaged area by mechanical scraping and emery paper to expose the white metal. Blasts clean the surfaces possible. Feather the primer over the intact adjacent surface surrounding the damaged area by emery paper.

5.9.3 Repair of damaged pre-erection and shop priming in the design temperature of 90° C to 500° C.

- Surface preparation shall be done as per procedure 5.9.2

- One coat of F-9 shall be applied wherever damaged was observed on pre-erection/ pre-fabrication/ shop primer of inorganic zinc silicate coating (F-9) shall not be applied if damaged area is not more than 5 x 5 cm.

5.10 **PAINT APPLICATION**

5.10.1 Shop priming/ pre-erection priming with F9 of F12 shall be done only on blasted surface.

5.10.2 Shop priming/ pre-erection priming with F-9 or F-12 shall be done only with airless spray.

5.10.3 For large flat surface field painting shall be done by airless spray otherwise brush can be used.

5.11 **Assessment of Painting Requirement**

The paint system to be applied for a specific job shall be arrived as sequentially as given below :

- Identify the environment from area classification details and chose the appropriate table.

- Identify the design temperature from the technical documents.

- Identify the specific field paint system and surface preparation requirement from the above identified table and temperature range.

- Identify the shop priming requirement from Table 7.1 based on compatibility of the above paint system.

- Identify the need of repair of shop primer and execute as per Table 7.2.

5.12 **Documentation.**

A written quality plan with procedure for qualification trials and for the actual work.
Daily progress report with dedtails of weather condition, particular of application no of coats and type of materials applied, anomolies, progress of work versus programme.
Result of measurement of temperature relative humidity, surface profile, film thickness, holiday detection, adhesion tests with signature of appropriate authority.
Particular of surface preparation and paint application during trials and during the work.
Details of non-compliance, rejects and repairs.
Type of testing equipments and calibration.
Code and batch numbers of paint material used.

TABLE-I (for clause 5.0)
SURFACE PREPARATION STANDARDS

S. NO.	DESCRIPTION	VARIOUS INTERNATIONAL STANDARDS (EQUIVALENT)				REMARK
		SWEDISH STANDARD SIS-05-5900 1967	SSPC-SP USA	NACE USA	BRITISH STANDARD BS-4232: 1967	
1.	MANUAL OR HAND TOOL CLEANING REMOVAL OF LOOSE RUST LOOSE MILL SCALE AND LOOSE PAINT, CHIPPING, SCRAPING, SANDING AND WIRE BRUSHING, SURFACE SHOULD HAVE A FAINT METALLIC SHEEN.	ST.2	SSPC-SP-2	-	-	THIS METHOD IS APPLIED WHEN THE SURFACE IS EXPOSED TO NORMAL ATMOSPHERIC CONDITION WHEN OTHER METHODS CANNOT BE ADOPTED AND ALSO FOR SPOT CLEANING DURING MAINTENANCE PAINTING.
2.	MECHANICAL OR POWER TOOL CLEANING REMOVAL OF LOOSE RUST, LOOSE MILL SCALE AND LOOSE PAINT TO DEGREE SPECIFIED BY POWER TOOL CHIPPING, DESCALING, SANDING, WIRE BRUSHING AND GRINDIN, AFTER REMOVAL OF DUST, SURFACE SHOULD HAVE A PRONOUNCED METALLIC SHEEN.	ST.3	SSPC-SP-3	-	-	-DO-

TABLE-I (for clause 5.0)
SURFACE PREPARATION STANDARDS

S. NO.	DESCRIPTION	VARIOUS INTERNATIONAL STANDARDS (EQUIVALENT)				REMARKS
		SWEDISH STANDARD SIS-05-5900 1967	SSPC-SP USA	NACE USA	BRITISH STANDARD BS-4232: 1967	
3.	BLAST CLEANING (AIR & WATER) THERE ARE FOUR COMMON GRADES OF BLAST CLEANING					
3.1	WHITE METAL BLAST CLEANING TO WHITE METAL CLEANLINESS REMOVAL OF ALL VISIBLE RUST, MILL SCALE PAINT & FOREIGN MATTER 100% CLEANLINESS WITH DESIRED SURFACE PROFILE.	SA-3	SSPC-SP-5	NACE#1	FIRST QUALITY	WHERE EXTREMELY CLEAN SURFACE CAN BE EXPECTED FOR PROLONG LIFE OF PAINT SYSTEMS.
3.2	NEAR WHITE METAL BLAST CLEANING TO NEAR WHITE METAL CLEANLINESS, UNIT AT LEAST 95% OF EACH ELEMENTS OF SURFACE AREA IS FREE OF ALL VISIBLE RESIDUES WITH DESIRED SURFACE PROFILE.	SA 2 ½	SSPC-SP-10	NACE #2	SECOND QUALITY	THE MINIMUM REQUIREMENT FOR CHEMICALLY RESISTANT PAINT SYSTEM SUCH AS EPOXY, VINYL, POLYURETHANE BASED AND INORGANIC ZINC SILICATE PAINTS, ALSO FOR CONVENTIONAL PAINT SYSTEM USED UNDER FAIRLY CORROSIVE CONDITIONS TO OBTAIN DESIRED LIFE OF PAINT SYSTEM.

TABLE-I (for clause 5.0)
SURFACE PREPARATION STANDARDS

S. NO.	DESCRIPTION	VARIOUS INTERNATIONAL STANDARDS (EQUIVALENT)				REMARKS
		SWEDISH STANDARD SIS-05-5900 1967	SSPC-SP USA	NACE USA	BRITISH STANDARD BS-4232: 1967	
3.3	COMMERCIAL BLAST BLAST CLEANING UNIT AT LEAST TWO—THIRD OF EACH ELEMENT OF SURFACE AREA IS FREE OF ALL VISIBLE RESIDUES WITH DESIRED SURFACE PROFILE.	SA-2	SSPC-SP-6	No. 3	THIRD QUALITY	FOR STEEL REQUIRED TO BE PAINTED WITH CONVENTIONAL PAINTS FOR EXPOSURE TO MILDLY CORROSIVE ATMOSPHERE FOR LONGER LIFE OF THE PAINT SYSTEMS.
3.4	BRUSH-OFF BLAST BLAST CLEANING TO WHITE METAL CLEANLINESS, REMOVAL OF ALL VISIBLE RUST, MILL SCALE , PAINT & FOREIGN MATTER, SURFACE PROFILE IS NOT SO IMPORTANT.	SA-1	SSPC-SP-7	No. 4		

6.0 PAINT MATERIALS

Paint manufacturers shall furnish all the characteristics of paint material on printed literature, alongwith the test certificate for all the specified characteristics given in this specifications. All the paint materials shall be of first quality and conform to the following general characteristics as per the table 6.1, 6.2 and 6.3.

PAINT MATERIALS
TABLE NO.: 6.1 PRIMERS

S. No.	DESCRIPTION	P-2	P-4	P-6
1.	Technical Name	Chlorinated rubber Zinc Phosphpate primer	Etch primer/ wash primer	Epoxy zinc phosphate primer
2.	Type and composition	Single pack, air drying chlorinated rubber based medium plasticised with unsaponlfiable plasticizer, plgmented with Zic phosphate.	Two pack polyvinyl butyral resin medium cured with phosphoric acid solution pogmented with zic tetroxy choromate.	Tow component polyamide cured epoxy resin medium, pigmented with zinc phosphate.
3.	Volume solids (approx)	40%	7-8%	40%
4.	DFT (Dry dilm thickness) per coat (approx)	40-50μ	8-10μ	40-50μ
5.	Theoretical covering capacity in M2/ coat/ litre (approx)	8-10	8-10	8-10
6.	Welght per litre in kgs/ litre (approx)	1.3	1.2	1.4
7.	Touch dry at 30° C (approx)	30 minutes	2 hrs.	After 30 mins.
8.	Hard dry at 30° C (approx)	Min.: 8 hrs. Max.: no limitation	Min.: 2 hrs. Max.: 24 hrs.	Min.: 8 hrs. Max.: 3-6 months
9.	Over Coating Interval (approx.)	Min : 8 hrs Max : No limitation	Min : 4.6 hrs Max : 24 hrs	Min : 8 hrs Max : 3-6 months
10.	Pot life (approx) at 30° C for two component paints (approx).	Not applicable	Not applicable	8 hrs.
11.	Temperature Resistance	60°C	Not applicable	80°C

PAINT MATERIALS
TABLE NO.: 6.2FINISH PAINT

S. No	DESCRIPTION	F-2	F-3	F-6	F-7
1.	Technical Name	Acrylic polyurethane finish paint	Chlorinated rubber based finish paint	Epoxy-High build finish paint	High build coaltar epoxy coating.
2.	Type and composition	Two-pack aliphatic isocynate cured acrylic finish paint	Single pack plasticised chlorinated rubber based medium with chemical and weather resistant pigments.	Tow- pack polyamide/ ployamine cured epoxy resin medium suitable pigmented.	Tow pack polyamide cured epoxy resin blended with coal/ tar medium, suitably pigmented.
3.	Volume solids (approx)	40%	40%	62%	65%
4.	DFT (Dry film thickness) per coat (approx)	30-40μ	40-50μ	100-125μ	100-125μ
5.	Theoretical covering capacity in M2/ coat/ litre (approx)	10-13	8-10	5-6	5-2-6.5
6.	Welght per litre in kgs/ litre (approx)	1.3	1.2	1.4	1.5
7.	Touch dry at 30° C (approx)	1 hrs.	30 minutes	3 hrs.	4 hrs.
8.	Hard dry at 30° C (approx)	Overnight	8 hrs.	Overnight	48 hrs.
9.	Overcoating interval (approx)	Min.: Overnight (12) hrs. Max.: Unlimited	Min.: Overnight Max.: Unlimited	Min.: Overnight Max.: 5 day	Min.: 24 hrs. Max.: 5 day
10.	Pot life at 30° C for two component paints (approx).	6-8 hrs.	Not applicable	4-6 hrs.	4-6 hrs.
11.	Temperature Resistance	80°C	60°C	80°C	125°C

PAINT MATERIALS
TABLE NO.: 6.3 FINISH PAINTS

S. No	DESCRIPTION	F-8	F-9	F-11	F-12
1.	Technical Name	Self priming type surface tolerant high build epoxy coating (Complete rust control coating)	Inorganic Zinc Slicate coating	Heat resistant synthetic medium based two pack aluminum paint suitable upto 250°C dry temperature	Heat resistant silicone aluminum paint suitable upto 500° C temperature
2.	Type and composition	Two-pack epoxy resin based suitable pigmented and capable pigmented and capable of adhering to manually prepared surface and old coating	A two-pack air drying self-curing solvent based inorganic zinc silicate coating.	Heat resistant synthetic medium based two pack aluminum paint suitable upto 250°C	Single pack silicone resin based medium with aluminum flakes.
3.	Volume solids (approx)	72%	60%	25%	20%
4.	DFT (Dry film thickness) per coat (approx)	100-125μ	65-75μ	20-25μ	20-25μ
5.	Theoretical covering capacity in M2/ coat/ litre	6.0-7.2	8-9	10-12	8-10
6.	Welght per litre in kgs/ litre (approx)	1.4	2.3	1.2	1.1
7.	Touch dry at 30° C (approx)	3 hrs.	30 min.	3 hrs.	30 min.
8.	Hard dry at 30° C (approx)	24 hrs.	12 hrs.	12 hrs.	24 hrs.
9.	Overcoating interval (approx)	Min.: 10 hrs. Max.: 6 months	Min.: 8 hrs. at 20°C and 50% RH. Max.: Unlimited	Min.: 16 hrs. Max.: Unlimited	Min.: 16 hrs. Max.: Unlimited

S. No	DESCRIPTION	F-8	F-9	F-11	F-12
10.	Pot life (approx) at 30° C for two component paints (approx).	90 min.	4-6 hrs.	Not applicable	Not applicable
11.	Temperature resistance	80°C	400°C	250° C	500° C

F-14: Specially for mulated polyamine cured coal tal epoxy suitable for-45°C to 125°C for application under insulation
F-15: Two pack cold curved epoxy phenolic coating suitable for 45°C to 125°C for application under insulation
F-16: Eoxy siloxane anser coat 738

PAINT MATERIALS
TABLE NO. 6.4 FINISH PAINTS

Sl. No.	Description	F-14	F-15	F-16	F-17
1.	Technical name	Polyamine cured coal tar epoxy	Two-component Epoxy phenolic coating cured with polyamine adduct hardner system (primer + intermediate coat + finish paint)	Ambient temperature curing Poly Siloxane coating / High build cold applied inorganic copolymer based aluminum coating suitable for under insulation coating of CS and SS piping for high temperature service.	Two component solvent free type high build epoxy phenolic / novalac epoxy phenolic coating cured with Polyamine adduct hardner system.
2.	Type & composition	Specially formulated polyamine cured coal tar epoxy suitable for application under insulation	Two pack ambient temperature curing epoxy phenolic coating system suitable for application under insulation of CS / SS piping.	Amercoat 738 from Ameron Products, USA / Berger 938 from Berger Paints Ltd., or Intertherm 751 CSA from Akzo Nobel coating. Note : 6	Two component solvent free type high build epoxy phenolic / novalac epoxy phenolic coating cured with Polyamine adduct hardner system.
3.	Volume Solids (minimum)	70%	65%	60%	98-100%
4.	DFT (Dry Film thickness) per coat (minimum)	125 μm	75 - 100 μm	75 - 100 μm	125- 150 μm
5.	Theoretical covering capacity in M^2 / coat / litre (minimum)	5.5	6.5-8.5	6.0-8.0	6.5-8.0
6.	Weight per liter in kgs/litre (max paint) (minimum)	1.5	1.7	1.3	1.7
7.	Touch dry at 30°C (maximum)	4 hrs.	2 hrs.	1 hr.	2 hrs.

Sl. No.	Description	F-14	F-15	F-16	F-17
8.	Hard dry at 30°C (maximum) Full cure 30°C (for immersion / high temp. service)	24 hrs. 168 hrs.(7 days)	24 hrs. 168 hrs.(7 days)	16 hrs. -	24 hrs. 168 hrs.(7 days)
9.	Over-coating interval	Min. 6 hrs. Max. 5 days	Min. 36 hrs. Max. 21 days	Min. 16 hrs. Max. Not applicable	Min. 16 hrs. Max. 21 days.
10.	Pot life at 30°C for two component paints (minimum)	4 hrs.	1.5 hrs.	1 hr.	1 hr.
11.	Temperature Resistance (min.)	-45°C to 125°C under insulation	-45°C to 125°C under insulation (Note : 5)	Up to 400°C for CS & SS under insulation	-45°C to 150°C for immersion service

Notes:

1. Covering capacity and DFT depends on method of application. Covering capacity specified above are theoretical. Allowing the loose during the application, minimum specified DFT should be maintained.

2. All primers and finish coats should be cold cured and air drying unless otherwise specified.

3. All paints shall be applied in accordance with manufacturer's instruction for surface preparation, intervals, curing and application. The surface preparation, quality and workmanship should be ensured.

4. Technical data sheets for all paints shall be supplied at the time of submission of quotations.

6.4 List of recommended manufacturers

The paint shall conform to the specifications given above and the best quality in their products range of the manufacturers listed in Annexure-I.

7.0 PAINT SYSTEM

The paint system should vary with type of environment envisaged in and around the plants. Three types of environment as given below are considered for selection of paint system. The paint system is also given for specific requirements.

Primers & finish coats covered in table nos. 7.0 to 15.0

PRIMERS

P-2	:	Chlorinated Rubber Zinc Phosphate Primer
P-4	:	Etch Primer/ Wash Primer
P-6	:	Epoxy Zic Phosphate Primer

FINISH COATS/ PAINTS

F-2	:	Acrylic- Polyurethane finish paint
F-3	:	Chlorinated Rubber Finish Paint
F-6	:	High Build Epoxy finish coating
F-7	:	High Build Coal Tar epoxy coating
F-8	:	Self-priming surface tolerant high build epoxy coating
F-9	:	Inorganic Zinc Silicate Coating.
F-11	:	Heat resistant Synthetic medium based Aluminum paint.
F-12	:	Heat resistant Silicone Aluminum paint.
F-14	:	Specially formulated polyamine-cured coal for Epoxy coating
F-15	:	Epoxy phenolic coating
F-16	:	Epoxy Siloxane Coating : Amercoat 738
F-17	:	Two component solvent free type high built epoxy phenolic / novalac epoxy phenolic coating cured with polyamine.

TABLE 7.1: PRE-ERECTION/ PRE-FABRICATION AND SHOP PRIMING FOR CARBON STEEL, LOW TEMPERATURE CARBON STEEL & LOW ALLOY STEEL, STEEL STRUCTURE, PIPING AND EQUIPMENT ETC.

S. No.	DESIGN TEMPERATURE IN °C	SURFACE PREPARATION	PAINT SYSTEM	TOTAL DFT IN MICRONS (MIN.)	REMARKS
7.1.1	-90 TO 400	SSPC-SP-10	1 COAT OF F-9	65-75	No overcoating is to be done
7.1.2	401 To 500	SSPC-SP-10	1 COAT OF F-12	40-50	Finish Coat at Site
7.1.3	-40 to 150 for Structures, hand rails and Grating only	SSPC-SP-3	1 COAT OF F-9 OR 2 COATS OF P-7 @ 40μ DFT / COAT	65-75 OF F-9 OR 80 (P-7)	For Damaged Area of more than 5 x 5 Cm2.

TABLE 7.2: REPAIR OF PRE-ERECTION/ PRE- FABRICATION AND SHOP PRIMING AFTER ERECTION/ WELDING FOR CARBON STEEL LOW TEMPERATURE CARBON STEEL & LOW ALLOY STEEL, ITEMS IN ALL ENVIRONMENT.

S. No.	DESIGN TEMPERATURE IN °C	SURFACE PREPARATION	PAINT SYSTEM	TOTAL DFT IN MICRONS (MIN.)	REMARKS
7.2.1	-90 TO 400	SSPC-SP-3 (FOR REPAIR ONLY) SSPC-SP-10	1 COAT OF F-9	65-75	FOR DAMAGED AREA OF MORE THAN 5X5 CM.
7.2.2	401 TO 550	SSPC-SP-3	1 COAT OF F-12	20	FOR DAMAGED AREA OF MORE THAN 5X5 CM.

TABLE 8.0: FIELD PAINT SYSTEM FOR NORMAL CORROSIVE ENVIRONMENT (FOR CARBON STEEL, LOW TEMPERATURE CARBON STEEL & LOW ALLOY STEEL)

ALL NORMAL CORROSIVE AREAS SUCH AS OFF SITES EXTERNAL SURFACE OF UNINSULATED COLUMNS, VESSELS, HEAT EXCHANGERS, BLOWERS, PIPING, PUMPS, TOWERS, COMPRESSORS, STRUCTURAL STEEL WORKS, RCC CHIMNEY WITH OR WITHOUT REFRACTORY LINE INSIDE CHIMNEY (ALL ENVIRONMENTS), EXCLUDING TANK TOPS, FLARE LINES, D.M. PLANTS, INTERIOR OF TANKS ETC. FLARE LINES FOR NORMAL CORROSIVE ENVIRONMENT ALSO TO NE PAINTED AS PER TABLE 9.0

S. NO.	DESIGN TEMPERATURE IN C	SURFACE PREPARATION	PAINT SYSTEM		TOTAL DFT IN MICRONS (MIN.)	REMARKS
			FIELD PRIMER	FINISH PAINT		
8.1	-90 TO –15	SSPC-SP-10	REPAIR OF PRE-FABRICATION PRIMER 1 COAT OF F-9 @65-75μ DFT/ COAT	NONE	65-75	No over coating to be done follow repair procedure only on damaged areas of pre-erection/ pre-fabrication primer/ coating F-9
8.2	-14 TO 60	SSPC-SP-10	REPAIR OF PRE-FABRICATION PRIMER 1 COAT OF F-9 @ 65-75μ DFT/ COAT + 2 COATS OF P-2 @ 40μ DFT/ COAT 2 X 40 = 80	2 COATS OF F-3 @ 40 μ DFT/ COAT 2 X 40 = 80	225	
8.3	61 TO 80	SSPC-SP-10	REPAIR OF PRE-FABRICATION PRIMER 1 COAT OF F-9 @ 65-75μ DFT/ COAT + 2 COATS OF P-6 @ 40μ DFT/ COAT 2 X 40 = 80	1 COATS OF F-6 @ 100 μ DFT/ COAT	245	

S. NO.	DESIGN TEMPERATURE IN C	SURFACE PREPARATION	PAINT SYSTEM		TOTAL DFT IN MICRONS (MIN.)	REMARKS
			FIELD PRIMER	FINISH PAINT		
8.4	81 TO 250	SSPC-SP-10	REPAIR OF PRE-FABRICATION PRIMER 1 COAT OF F-9 @ 65-75μ DFT/ COAT	3 COATS OF F-11 @ 20 μ DFT/ COAT 3 X 20 = 60	125	
8.5	251 TO 400	SSPC-SP-10	REPAIR OF PRE-FABRICATION PRIMER 1 COAT OF F-9 @ 65-75μ DFT/ COAT	2 COATS OF F-12 @ 20 μ DFT/ COAT 2 X 20 = 40	105	
8.6	401 TO 500	SSPC-SP-10	REPAIR AS PER 7.2.2	2 COATS OF F-12 @ 20 μ DFT/ COAT 2 X 20 = 40	80	

NOTE 1 : FOR MS CHIMNEY OR WITHOUT REFRACTORY LINING 8.3, 8.4 AND 8.5 SHALL BE FOLOWED.

NOTE 2 : FOR EXTENAL SURFACE OF RCC CHMNEY: 2 COATS OF F-6 @ 100 μ DFT/ COAT TO OBBTAIN 2 X 100=200μ SHALL BE APPLIED AFTER MAKING SURFACE PREPARATION AS PER GUIDELINES IN 1.5

NOTE 3 : WHEREVER REQUIRED S.NO. 8.3 SHALL BE USED FOR 14°C TO 80°C AND S.NO. 8.2 WILL BE DELETED.

TABLE 9.0: FIELD PAINT SYSTEM FOR CORROSIVE ENVIRONMENT (FOR CARBON STEEL, LOW TEMPERATURE CARBON STEEL & LOW ALLOY STEEL)

FOR ALL CORROSIVE AREAS ABOVE GROUND WHERE H_2S, SO_2 FUMES OR SPILLAGE'S OF ACID/ ALKALI/ SALT ARE LIKELY TO COME IN CONTACT WITH SURFACE SUCH AS EXTERNAL SURFACE OF UNINSULATED COLUMNS, VESSELS, HEAT EXCHANGERS, BLOWERS, PIPING, PUMPS, TOWERS, COMPRESSORS, FLARE LINES, STRUCTURAL STEEL ETC.

S. NO.	DESIGN TEMPERATURE IN °C	SURFACE PREPARATION	PAINT SYSTEM		TOTAL DFT IN MICRONS (MIN.)	REMARKS
			FIELD PRIMER	FINISH PAINT		
9.1	-90 TO –15	SSPC-SP-10	REPAIR OF PRE-FABRICATION PRIMER 1 COAT OF F-9 @ 65-75μ DFT/ COAT	NONE	65-75	Repair of pre-erection/ pre fabrication primer shall be done wherever damage is observed.
9.2	-14 TO 80	SSPC-SP-10	REPAIR OF PRE-FABRICATION PRIMER 1 COAT OF F-9 @ 65-75μ DFT/ COAT + 1 COATS OF P-6 @40 μ DFT/ COAT	1 COATS OF F-6 @ 100μ DFT/ COAT + 1 COAT OF F-2 @ 40μ DFT/ COAT	225	Surface preparation is required only for repairing of damaged pre-erection/ fabrication primer
9.3	81 TO 400	SSPC-SP-10	REPAIR OF PRE-FABRICATION PRIMER 1 COAT OF F-9 @ 65-75μ DFT/ COAT	2 COATS OF F-12 @ 20 μ DFT/ COAT 2 X 20 = 40	105	
9.4	401 TO 500	SSPC-SP-10	REPAIR 2S PER 7.2.2	2 COATS OF F-12 @ 20 μ DFT/ COAT	80	

TABLE 10.0: FIELD PAINT SYSTEM FOR HIGHLY CORROSIVE (FOR CARBON STEEL, LOW TEMPERATURE CARBON STEEL & LOW A LLOY STEEL) EXTERNA L SURFACES OF UNINSULA TED COLUMNS, VESSELS, HEAT EXCHANGERS, BLOWERS, PIPING PUMPS, TOWERS, COMPRESSORS, FLARE LINES, STRUCTURE STEEL ETC.

EXPOSED TO SPILLAGE OR FUMES OF HCL H_2S0_4, SALTY WATER IMPINGEMENT, CHLORIDE ETC.

S. NO.	DESIGN TEMPERATUR E IN °C	SURFACE PREPARATION	PAINT SYSTEM		TOTAL DFT IN MICRONS (MIN.)	REMARKS
			FIELD PRIMER	FINISH PAINT		
10.1	-90 TO –15	SSPC-SP-10	REPAIR OF PRE-FABRICATION PRIMER 1 COAT OF F-9 65-75μ DFT/ COAT	NONE	65-75	Repair of pre-erection/ fabrication primer shall be followed. No over coating is allowed
10.2	-14 TO 80	SSPC-SP-10	REPAIR OF PRE-FABRICATION PRIMER 1 COAT OF F-9 @ 65-75μ DFT/ COAT + 1 COATS OF P-6 @40 μ DFT/ COAT	2 COATS OF F-6 @ 100μ DFT/ COAT = 2 X 100= 200 + 1 COAT OF F-2 @ 40μ DFT/ COAT	345	Surface preparation is required only for repairing of damaged pre-erection/ fabrication primer.
10.3	81 TO 400	SSPC-SP-10	REPAIR OF PRE-FABRICATION PRIMER 1 COAT OF F-9 @ 65-75μ DFT/ COAT	2 COATS OF F-12 @ 20 μ DFT/ COAT 2 X 20 = 40	105	
10.4	401 TO 500	SSPC-SP-10	REPAIR AS PER 7.2.2	3 COATS OF F-12 @ 20 μ DFT/ COAT 2 X 20 = 40	80	

TABLE 11.0 : FIELD PAINT SYSTEM FOR CARBON STEEL STORAGE TANKS (EXTERNAL) FOR ALL ENVIRONMENTS.

S. NO.	DESIGN TEMPERATURE IN °C	SURFACE PREPARATION	PAINT SYSTEM		TOTAL DFT IN MICRONS (MIN.)	REMARKS
			FILED PRIMER	FINISH PAINT		
1.1 EXTERNAL SHELL. WIND GIRDERS APPARATUSES, ROOF TOPS OF ALL GROUND TANK INCLUDING TOP SIDE OF FLOATING ROOF OF OPEN TANK AS WELL AS COVERED FLOATING ROOF AND ASSOCIATED STRUCTURAL WORK ROLLING AND STATIONARY LADDERS, SPIRAL STAIRWAYS, HAND TAILS FOR ALL ENVIRONMENTS FOR GRUDE OIL, LDO, HSD, ATF KEROSENE, GASOLINE, MOTOR SPIRIT, DM WATER, FIREWATER, RAW WATER, POTABLE WATER, ACIDS, ALKALIS SOLVENTS AND CHEMICALS ETC.						
11.1.1	-14 TO 80	SSPC-SP-10	1 COAT OF F-9 @ 65-75µ DFT/ COAT + 1 COATS OF P-6 @40 µ DFT/ COAT 65 X 40 = 105	1 COATS OF F-6 @ 100µ DFT/ COAT + 2 COATS OF F-2 @ 40µ DFT/ COAT 2 X 40 = 80	285	F-6 should be suitable for occasional water immersion
11.1.2	81 TO 500	SSPC-SP-10	1 COAT OF F-9 @ 65-75µ DFT/ COAT	2 COATS OF F-12 @ 20 µ DFT/ COAT 2 X 20 = 40	105	
11.2 EXTERNAL SURFACE OF BOTTOM PLATE (SOIL SIDE) FOR ALL STORAGE TANKS.						
11.2	-14 TO 80	SSPC-SP-10	1 COAT OF F-9 @ 65-75µ DFT/ COAT	3 COATS OF F - 7 @ 100 µ DFT/ COAT 3 X 100 = 300	365	F7 should be suitable for immersion service of the products given.

TABLE 12.0 : FIELD PAINT SYSTEM FOR CARBON STEEL AND ALLOY STORAGE TANK: (INTERNAL)

S. NO.	DESIGN TEMPERATURE IN °C	SURFACE PREPARATION	PAINT SYSTEM		TOTAL DFT IN MICRONS (MIN.)	REMARKS
			FILED PRIMER	FINISH PAINT		
INTERNAL SURFACE OF UNDERSIDE OF FLOATING ROOF, INTERNAL STRUCTURAL OF CONE ROOF, BOTTOM PLATE, ROOF STRUCTURE, STEEL, LADDERS SUPPORTS FOR STORING GRUIDE OIL, LDO AND HSD (EXCLUDING WHITE OIL PRODUCTS)						
12.1	-14 TO 80	SSPC-SP-10	1 COAT OF F-9 @ 65-75μ DFT/ COAT	3 COATS OF F-7 @ 100μ DFT/ COAT 3 X 100 = 300	365	F7 should be suitable for immersion service of the products given.
12.2	BARE SHEEL OF INSIDE FLOATING ROOF TANK AND CONE ROOF TANK FOR PRODUCTS MENTIONED IN 12.1					
12.2.1	-14 TO 80	SSPC-SP-10	PHOSPHATING TREATMENT WITH PHOSPHATING CHEMICALS (2 COATS)	2 COATS OF @10 μ 2 X 10 = 20	20	
12.3	FLOATING CONE ROOF TANKS FOR PETROLEUM PRODUCTS SUCH AS ATF, GASOLINE, NAPHTHA, KEROSENE, MOTOR SPIRIT, INSIDE OF BOTTOM PLATE, UNDERSIDE OF FLOATING ROOF AND SHELL ABOVE MAXIMUM LIQUID LEVEL AND STRUCTURAL STEEL , LADDERS ETC.					
12.3.1	-14 TO 80	SSPC-SP-10	1 COAT OF F-9 @ 65-75μ DFT/ COAT	3 COATS OF F-6 @ 100μ DFT/ COAT 3 X 100 = 300	365	F-6 should be suitable for immersion service of petroleum produce like ATF, Kerosene, petrol etc.
12.4	BARE SHELL OF INSIDE OF FLOATING CONE ROOF TANKS FOR PRODUCTS MENTIONED IN 12.3					
12.4.1	-14 TO 80	SSPC-SP-10	1 COAT OF F-9 @ 65-75μ DFT/ COAT	NONE	65-75	No over coating is allowed same as per pre-erection primer, if any
12.5	INTERNAL PROTECTION IF FIXED ROOF TYPE STORAGE TANKS FOR POTABLE WATER: INSIDE OF SHELL, UNDER SIDE OF ROOF AND ROOF STRUCTURE INSIDE SURFACE BOTTOM PLATE AND STRURAL STEEL WORKS, LADDERS, WALKWAYS, PLATFORMS ETC.					
12.5.1	-14 TO 80	SSPC-SP-10	2 COAT OF F-6 @ 40μ DFT/ COAT 2 X 40 = 80	2 COATS OF F-6 @ 100μ DFT/ COAT 2 X 100 = 200	280	F-6 shall be suitable for immersion service.
12.6	D. M. (DEMINERALISED WATER) AND HYDROCHLORIC ACID (HCL): INTERNAL SHELL, BOTTOM PLATE AND ALL ACCESSORIES					
12.6.1	-14 TO 80	SSPC-SP-10	EBONITE RUBBER LINING AS PER SMMS SPECIFICATION 6-06-204			
12.7	EG TANKS (INTERNAL SHELL, BOTTOM PLATE ROOF AND ALL ACCESSORIES)					
12.7.1	ALL	SSPC-SP-10	3 COATS VINYL CHLORIDE CO-POLYMER AMERCOAT 23 @ 75μ / COAT		225	

S. NO.	DESIGN TEMPERATURE IN °C	SURFACE PREPARATION	PAINT SYSTEM		TOTAL DFT IN MICRONS (MIN.)	REMARKS
			FILED PRIMER	FINISH PAINT		
12.8	INSIDE PONTOON AND INSIDE OF DOUBLE DECK OF ALL FLOATING ROOFS.					
12.8.1	-14 TO 80	SSPC-SP-3	1 COAT OF F-8 @ 100μ DFT/ COAT	1 COATS OF F-6 @ 100μ DFT/ COAT 1 X 100 = 100	200	
12.9	INTERNAL SURFACE OF AMINE & SOUR WATER STORAGE TANKS					
12.9.1	-14 TO 80	SSPC-SP-10	1 COAT OF F-9 @ 65-75μ DFT/ COAT 2 X 40 = 80	2 COATS OF F-15 @ 75μ DFT/ COAT 2 X 75 = 150	215-225	

TABLE 13.0 : COATING SYSTEM FOR EXTERNAL SIDE OF UNDERGROUND CA RBON STEEL PLANT PIPING AND TANKS

S. NO.	DESIGN TEMPERATURE IN °C	SURFACE PREPARATION	PAINT SYSTEM		TOTAL DFT IN MICRONS (MIN.)	REMARKS
			PRIMER	FINISH PAINT		
13.1	CARBON STEEL PLANT PIPING (UNDERGROUND)					
13.1.1	YARD COATING					
13.1.1.1	25 TO 60	SSPC-SP-10	1 COAT OF SYNTHETIC FAST DRYING PRIMER TYPE-B AS PER AWWA-C-203 (1991)	4mm THICK COALTAR COATING WRAPPING AS PER AWWA-C-203 IN 2 LAYER OF EACH 2mm THICKNESS	4mm	CTE coating shall confirm to 120/ 5 as per BS: 4164
13.1.2	OVER THE DITCH COATING					
13.1.2.1	25 Tto 60	SSPC-SP-10	1 COAT OF SYNTHETIC FAST DRYING PRIMER TYPE-B AS PER AWWA-C-203 (1991)	2 LAYERS OF COALTAR BASED TAPE COATING AS PER AWWA-C-203.	4 mm	
13.2	CARBON STEEL PLANT PIPING (UNDERGROUND)					
13.2.1	61 TO 400	SSPC-SP-10	1 COAT OF F-9 @ 65-75μ DFT/ COAT	NONE	65-75	
13.3	EXTERNAL SIDE OF UNINSULATED UNDERGROUND STORAGE TANKS:					
13.3.1	40 TO 80	SSPC-SP-10	1 COAT OF F-9 @ 65-75μ DFT/ COAT	3 COATS OF F-7 @ 100μ DFT/ COAT 3 X 100 = 300	365	
13.3.2	-90 TO –41 81 TO 400° c	SSPC-SP-10	1 COAT OF F-9 @ 65-75μ DFT/ COAT 1 COAT OF AMERCOAT 738 @ 250μ DFT/ COAT	NONE NONE	65-75 250	

TABLE 14.0 : PAINTING UNDER INSULATION FOR INSULATED (HOT COLD SAFETY CARBON STEEL, LOW ALLOY STEEL, LOW TEMPERATURE CARBON STEEL & STAINLESS STEEL PIPING, STORAGE TANKS EQUIPMENTS IN ALL ENVIRONMENT

S. NO.	DESIGN TEMPERATURE IN °C	SURFACE PREPARATION	PAINT SYSTEM		TOTAL DFT IN MICRONS (MIN.)	REMARKS
			PRIMER	FINISH PINTS		
14.1	INSULATED CARBON STEEL, LOW ALLOY STEEL AND LTCS PIPING AND EQUIPMENT & TANKS					
14.1.1	-4 TO 125	SSPC-SP-10	REPAIR OF PRE-FABRICATION PRIMER F-9 @ 65-75μ DFT	2 COATS OF F-14 @ 125μ DFT/ COAT 2 X 125 = 250 OR 3 COATS OF F-15= 3 X 80=240	315	For other temprature ranges no painting is required under insulation.
14.1.2	OPERATING TEMPERATURE –45 TO 125° C BUT DESIGN TEMPERATURE 126-400° C	SSPC-SP-10	REPAIR OF PRE-FABRICATION PRIMER F-9 @ 65-75μ DFT	3 COATS OF F-12 @ 20μ DFT/ COAT 3 X 20 = 60	105-115	
14.2	INSULATED STAINLESS STEEL INCLUDING ALLOY-20- PIPING					
14.2.1	BELOW 0° C TO ALL MINUS TEMPRATURE	ALUMINUM SHEETING WITH ALUMINUM FOIL AND CHLORIDE FREE MINERAL SEALANT CONTAINING BARIUM CHROMATE SHALL BE APPLIED				If the piping & equipments are already erected then surface shall be prepared by cleaning with emery paper and wash/ flush with chloride free DM water followed by wiping with organic solvent
14.2.2	0 TO 120	SSPC-SP-10 (15-25μ SURFACE PROFILE)	NONE	2 COATS OF F-14 @ 125μ DFT/ COAT 2 X 125 = 250 OR 3 COATS OF F-15= 3 X 80 = 240	250	

S. NO.	DESIGN TEMPERATURE IN °C	SURFACE PREPARATION	PAINT SYSTEM		TOTAL DFT IN MICRONS (MIN.)	REMARKS
			PRIMER	FINISH PINTS		
14.2.3	121 TO 500	SSPC-SP-10	NONE	3 COATS OF F-12 @ 20μ DFT/ COAT 3 X 20 = 60	60	No pre erection primer to be applied
14.2.4	501 TO 1000	SSPC-SP-10	NONE	1 COAT OF AMERCOAT 738 @ 150μ DFT/ COAT	150	Only Amorcoat 738 from Amoron is available for this temperature range.
14.2.5	CYCLIC SERVICE-196 TO 480 EXCEPTING –45 TO 120	SSPC-SP-10	NONE	1 COAT OF AMERCOAT 738 @ 150μ DFT/ COAT	150	
14.3	NO PAINTING REQUIRED FOR INSULATED MONEL, IN COLOY AND NICKEL LINES					

TABLE 15.0 : INTERNAL PROTECTION OF CARBON STEEL WATER BOXES AND TUBE SHEETS OF COOLERS/ CONDENSERS WATER BOXES, CHANNELS, PARTITION PLATES, END COVERS AND TUBE SHEETS ETC.

S. NO.	DESIGN TEMPERATURE IN °C	SURFACE PREPARATION	PAINT SYSTEM		TOTAL DFT IN MICRONS (MIN.)	REMARKS
			PRIMER	FINISH PAINT		
15.1	Upto 65	SSPC-SP-10	1 COATS OF F-6 @ 40μ DFT/ COAT	2 COATS OF F-7 @ 125μ DFT/ COAT 2 x 125 = 250	290	For C. S.
15.2	Upto 65 NON FERROUS AND BRASS TUBE SHEETS	SSPC-SP-10	1 COATS OF P-4 @ 8μ DFT/ COAT 1 COATS OF P-6 @ 40μ DFT/ COAT	2 COATS OF F-7 @ 125μ DFT/ COAT 2 x 125 = 250	300	FOR NON FERROUS SURFACE

TABLE 16.0 FIELD PAINTING SYSTEM FOR GI TOWERS/ NON-FERROUS TUBE SHEET

S. NO.	DESIGN TEMPERATURE IN °C	SURFACE PREPARATION	PAINT SYSTEM		TOTAL DFT IN MICRONS (MIN.)	REMARKS
			FILED PAINT	FINISH PAINT		
16.1	Upto 65	SSPC-SP-10	1 COATS OF P-4 @ 8-10μ DFT/ COAT + 1 COAT OF P-6 @ 4μ DFT/ COAT	2 COATS OF F-2 @ 40μ DFT/ COAT 2 x 40 = 250	130	SHADE AS PER DEFENCE REQUIREMENTS
16.2	Upto 65 NON FERROUS AND BRASS TUBE SHEETS	SSPC-SP-10	1 COATS OF P-4 @ 8μ DFT/ COAT 1 COATS OF P-6 @ 40μ DFT/ COAT	2 COATS OF F-7 @ 125μ DFT/ COAT 2 x 125 = 250	300	

17.0 STORAGE

17.1 All paints and painting materials shall be stored only in rooms to be arranged by contractor and approved by Engineer-in-Charge for the purpose. All necessary precautions shall be taken to prevent fire. The storage building shall preferably be separate from adjacent building. A signboard bearing the words " PAINT STORAGE NO NAKED LIGHT-HIGHLY INFLAMMABLE" shall be clearly displayed outside.

18.0 COLOUR CODE FOR PIPING

For identification of pipeline, the colour code as per Table 18.1 shall be used. Paint material for color-coding shall be as specified in this standard in clause- 6.0.

18.1 Colour coding scheme for pipe, equipment, machinery & structure:

SR. NO.	DESCRIPTION	GROUND COLOUR	FIRST COLOUR BAND	SECOND COLOUR BAND
18.1.1	ALL KINDS OF WATER			
	DRINKING WATER	Sea Gree	French Blue	Signal Red
	DE-MINERALISED WATER	-do-	Gulf Red	-
	COOLING WATER	-do-	French Blue	-
	BOILER FEED WATER	-do-	Gulf Red	-
	CONDENSATE	-do-	Light Brown	Signal Red
	QUENCH WATER	-do-	Dark Grey	-
	WASH WATER	-do-	Ganary Yellow	-
	PROCESS WATER	-do-	Oxide Red	-
	PROCESS WATER	-do-	Crimson Red	-
	FIRE WATER	Fire red	White	-
	SEA WATER	Sea Green		-
18.1.2	STEAM			
	VERY HIGH PRESSURE STEAM (VHP)	Aluminiumto IS2339	Signal Red	-
	HIGH PRESSURE STEAM (SH)	-do-	French Blue	-
	MEDIUM PRESSURE STEAM (SH)	-do-	Gulf Red	
	LOW PRESSURE STEAM (SL)	-do-	Canary Yellow	Canary Yellow
	DILUTION STEAM/ PURGE STEAM	-do-	Grey	

SR. NO.	DESCRIPTION	GROUND COLOUR	FIRST COLOUR BAND	SECOND COLOUR BAND
18.1.3	COMPRESSED AIR PLANT AIR INSTRUMENT AIR NITROGEN OXYGEN CO_2	Sky Blue -do- -do- Canary Yello -do- -do-	Signal Red Silver Grey French Blue Black White Light Grey	- - - - - -
18.1.4	GASES FUEL GAS AND SOUR GAS CHARGE GAS RESIDUE GAS, LPG ACETYLENE SWEET GAS	 Canary Yellow -do- -do- -do- -do-	 Grey Signal Red Oxide Red Service Brown Grey	 Dark Violet French Blue White - -
18.1.5	ACIDS AND CHEMICALS SULFURIC ACID NITRIC ACID HYDROCHLORIC ACID ACETIC ACID CAUSTIC CHLORINE	 DARK Violet -do- -do- -do- smoke Grey Canary Yellow	 Briliant Green French Blue Signal Red Silver Grey Light Orange Dark Violet	 Light Orange -do- -do- -do- - -do-
18.1.6	HYDRO CARBONS NAPTHAS PROPYLENE PROPYLENE C.G. (LIQ) ETHYLENE GLYCOL ETHYLENE DICHLORIDE BENZENE BUTADIENE ETHANE(LIQ) PROPYLENE(LIQ) ETHYLENE(LIQ) TAR AROMATIC GASOLINE METHANOL (LIQ) PYROLYSIS GASOLINE MIXED C4(LIQ) LPG(LIQ) KEROSENE DIESEL OIL (WHITE) DIESEL OIL (BLACK)	 Dark Admiralty Grey -do- -do- -do- -do- -do- -do- Dark Admiralty Grey -do- -do- -do- -do- -do- -do- -do- -do- Light Brown -do- -do-	 Brilliant Green -do- -do- -do- Gulf Red Canary Yellow Black Light Grey Signal Red Light Grey Signal Grey Brilliant Green White Brilliant Green Signal Green Brilliant Gren -do- -do- -	 Black Smoke Grey Gulf Red - - - French Blue Black Black Brilliant Green Canary Yellow Gulf Red Black Light Brown Dark Violet - -

18.2 The colour code scheme is intended for identification of the individual group of the pipeline. The system of colour coding of a ground colour and colour bands superimposed on it.

18.3 Ground colours as given in Table 18.1 shall be applied throughout the entire length for uninsulated pipes, on the metal cladding & on surfaces covered by Clause 2.2.2, ground colour coating of minimum 2m length or of adequate length not to be mistaken as colour band shall be applied at places requiring colour bands. Colour band(s) shall be applied at the following location.

a. At battery limit points

b. Intersection points & change of direction points in piping ways.

c. Other points, such as midway of each piping way, near valves, junction joints of services appliances, walls, on either side of pipe culverts.

d. For zong stretch/ xard piping at 50M interval.

e. At start and terminating points.

18.4 **Identification Sign**

18.4.1 Flow direction shall be indicated by an arrow in the location stated in Para a,b,c & d and as directed by Engineer-in-charge.

18.4.2 Colours of arrows shall be black or white and in contrast to the colour on which they are superimposed.

18.4.3 Product names shall be marked at pump inlet, outlet and battery limit in a suitable size as approved by Engineer-in-charge.

18.4.4 Size of arrow shall be either of those given in 18.5.

18.5 **Colour Bands**

18.5.1 As a rule minimum width of colour band shall conform to the following table:

Nominal Pipe Size	Width : L(mm)
3" NB and below	25mm
Above 3" NB upto 6" NB	50mm
Above 8" NB upto 12" OD	75mm
Above 12" OD	100mm

Note: For insulated pipes, nominal pipe size means the outside diameter of insulation.
Nominal pipe size figures are to be inches.

18.5.2 Colour band(s) shall be arranged in the sequence shown in Table 18.1 and the sequence follows the direction of flow. The relative proportional width of the first colour band to the subsequent bands shall be 4:1, minimum width of any band shall be as per Clause 18.5.1.

18.5.3 Whenever it is required by the Engineer-in-charge to indicate that a pipeline carries a hazardous material, a hazard marking of diagonal strips of black and golden yellow as epr IS:2379 shall be painted on the ground colour.

18.6 Wherever it is required by the Engineer-in-charge to indicate that a pipeline carries a hazardous material, a hazard marking of diagonal strips of black and golden yellow as per IS:2379 shall be painted on the ground colour.

19.0 IDENTIFICATION OF VESSELS, PIPING ETC.

19.1 Equipment number shall be stencilled in black or white on each vessel, column, equipment & machinery (insulated or uninsulated) after painting. Line number n black or white shall be stencilled on all the pipelines of more than one location as directed by Engineer-in-charge, size of letters printed shall be as below :

Column & Vessels	-	150mm(high)
Pump, Compressor and other machinery	-	50mm (high)
Piping	-	40-150mm

19.2 **Identification of storage tanks**

The storage tanks shall be marked as detailed in the drawing.

20.0 **PAINTING FOR CIVIL DEFENCE REQUIREMENTS**

20.1 Following items shall be painted for camouflaging if required by the client.

a. All columns
b. All tanks in offsites
c. Large vessels
d. Spheres

20.2 Two coats of selected finishing paint as per defence requirement shall be applied in a particular pattern as per 20.3 and as per the instructions of Engineer-in-charge.

20.3 **Method of Camouflaging**

20.3.1 Disruptive painting for camouflaging shall be done in three colours in the ratio of 5:3:2 (all matt finish).

Dark Green	Light Green	Dark Medium Brown
5:	3:	2

20.3.2 The patches should be asymmetrical and irregular.

20.3.3 The patches should be inclined at 30 degree to 60 degree to the horizontal.

20.3.4 The patches should be continuous where two surfaces meet at an angle.

20.3.5 The patches should not coincide with corners.

20.3.6 Slits and holes shall be painted and dark shades.

20.3.7 Width of patches should be 1 to 2 meters.

21.0 INSPECTION AND TESTING

21.1 All painting materials including primers and thinners brought to site by contractor for application shall be procured directly from manufacturers as per specifications and shall be accompanied by manufacturer's test certificates. Paint formulations without certificates are not acceptable.

21.2 Engineer-in-Charge at his discretion, may call for tests for paint formulations. Contractor shall arrange to have such tests performed including batchwise test of wet paints for physical & chemical analysis. All costs there shall be borne by the contractor.

21.3 The painting work shall be subject to inspection by Engineer-in-Charge at all times. In particular, following stagewise inspection will be performed and contractor shall offer the work for inspection and approval of every stage before proceeding with the next stage. The record of inspection shall ne maintained in the registers. Stages of inspection are as follows:

a. Surface preparation
b. Primer application
c. Each coat of paint

In addition to above, record should inculde type of shop primer already applied on equipment e. g. Redd oxide zinc chromate or zinc chromate or Red lead primer etc.

Any defect noticed during the various stages of inspection shall be rectified by the contractor to the entire satisfaction of Engineer-in-Charge before proceeding further. Irrespective of the inspection, repair and approval at intermidiate stages of work. Contractor shall be responsible for making good any defects found during final inspection/ guarantee period/ defect liability period as defined in general condition of contract. Dry film thickness (DFT) shall be checked and recorded after application of each coat and extra coat of paint should be applied to make-up the DFT specified without any extra cost to owner, the extra cost should have prior approval of Engineer-in-Charge.

21.4 **Primer Application**

After surface preparation the primer should be applied to cover the crevices, corners, sharp edges etc. in the presence of inspector nominated by Engineer-in-Charge.

21.5 The shades of successive coats should be slightly different in colour in order to ensure application of individual coats, the thickness of each coat and complete coverage should be checked as per provision of this specification. This should be approved by Engineer-in-Charge before application of successive coats.

21.6 The contractor shall provide standard thickness measurement instrument with appropriate ranges(s) for measuring.

Dry film thickness of each coat, surface profile guage for checking of surface profile in case of blast cleaning. Holiday directors and pinhole detector and positector whenever required for checking in case of immersion conditions.

21.7 Prior to application of paints on surface of chimneys the thickness of the individual coat shall be checked by application of each coat of same paint on M. S test panel. The thickness of paint on test panel shall be determined by using guage such as 'Elkomere'. This thickness of each coat shall be checked as per provision of this specification. This shall be approved by Engineer-in-Charge before application of paints on surface of chimney.

21.8 At the discretion of Engineer-in-Charge, the paint manufacturer must provide the expert technical service at site as and when required. This service should be free of cost and without any obligation to the owner, as it would be in the interest of the manufacturer to ensure that both surface preparation and application are carried out as per their recommendations.

21.9 Final inspection shall include measurement of paint dry film thickness. Adhesion Holiday detection check of finish and workmanship. The thickness should be measured at as many points/ locations as decided by Engineer-in-Charge and shall be within + 10% of the dry thickness, specified in the specifications.

21.10 The contractor shall arrange for spot checking of paint materials for Sp. Gr., flow time (ford cup) and spreading rate.

22.0 GUARANTEE

22.1 The contractor shall guarantee that the chemical and physical properties of paint materials used are in accordance with the specifications contained herein/ to be provided during execution of work.

22.2 The contractor shall produce test report from manufacturer regarding the quality of the particular batch of paint supplied. The Engineer-in-Charge shall have the right the test wet samples of paint at random, for quality of same as stipulated in clause 11 above. Batch test report of manufacturer's for each batch paint supplied shall be made available by the contractor.

23.0 QUALIFICATION CRITERIA OF PAINTING CONTRACTOR

Painting contractor who is awarded any job for MECON, projects under this standard must have necessary equipments, machinery, tool and tackles for surface preparation, paint application and inspection. The contractor must have qualified trained and experienced surface preparation, paint applicator, inspector, and supervisors. The contractor supervisor, inspector surface perpetrator and paint applicator must be conversant with the standards referred in this specification the contractors capacity, capability and competency requirements for the job shall be quantified in the tender document and shall be assessed by an MECON team before awarding any job.

24.0 PROCEDURE FOR APPROVAL OF NEW COATING MATERIALS AND MANUFACTURER'S

Following procedure is recommended to be followed for approval of new manufacturers.

24.1 The manufacturer should arrange testing of the inorganic zinc silicate coating materials as per the list of tests given in para 24.5 below from one of the reputed Government laboratories.

24.2 Samples of coating should be submitted to the Govt. laboratory in sealed containers with batch no. and test certificate on regular format of manufacturer's testing laboratory. The sampling shall be certificate and sealed by a citifying agency.

24.3 All test panels should be prepared by govt. testing agency coloured photographs of test panels should be taken before and after the test should be enclosed alongwith test report.

Sample batch. No. and manufacturer's test certificate should ne enclosed alongwith the report. Test reports contain details of observation and rusting if any, as per the testing code. Suggested government laboratories are:

RRL, Hayderabad
HBTI, Kanpur
DMSRDE, Kanpur
IIT, Mumbai
BIS Laboratory
UDCT, Mumbai
RITES, Calcutta
PDIL

24.4 Manufacturers should intimate the company, details of sample submitted for testing name of Govt. testing agency, date, contact personnel of the Govt. testing agency. At the end of the test the manufacturer should submit the test report to the company for approval. The manufacturer(s) shall be qualified based on the result of these tests and other assessment and the Company's decision in this regard shall be final and binding on the manufacturer.

24.5 Tests required for evaluation of acceptance of coating materials for offshore application.

Test	ASTM Test Method
Density	D 1475
Dipping properties	D 823
Film Characteristics	
Drying time	D 1640
Flexibility	D 1737/ D 522
Hardness	D 3363
Adhesion	D 2197
Abrasion resistance	D 968/ D 1044
DFT/ Coat	AS PER SSPC GUIDELINES
Storage Stability	D 1849
Resistance to	
Humidity for 2000 hrs.	D 2247
Salt Spray for 2000 hrs.	B 117
Accelerated Weathering	D 822
% Zn in DFT	G 53

24.6 Coating system for panel test shall be decided after discussion with MECON.

ANNEXURE-I

LIST OF RECOMMENDED MANUFACTURERS

Indian Vendors

1.0 Asian Paints(I) Ltd.
2.0 Berger Paints Ltd.
3.0 Goodlass Nerlolac Paints Ltd.
4.0 Jenson And Nicholson Paint Ltd & chokuGu Jenson & Nicholson Ltd.
5.0 Shalimar Paints Ltd.
6.0 Sigma Coating, Mumabai
7.0 CDC Carboline Ltd.
8.0 Premier Products Ltd.
9.0 Coromandel Paints & Chemicals Ltd.
10.0 Anupam Enterprises
11.0 Grand Polycoats
12.0 Bombay Paints Ltd.
13.0 Vanaprabha Esters & Glycer, Mumbai
14.0 Sunil Paints and Varnishes Pvt. Ltd.
15.0 Courtaulds Coating & Sealants India (Pvt.) Ltd.
16.0 Mark-chem Incorporated, Mumbai (for phosphating chemicals only)
17.0 VCM Polyurethane Paint (for polyurethane Paint only)

FOREIGN VENDORS FOR OVERSEAS PRODUCTS

1.0 Sigma Coating, Singapore
2.0 Ameron, USA
3.0 Kansai Paint, Japan
4.0 Hempel Paint, USA
5.0 Valspar Corporation, USA
6.0 Courtaulds Coating, UK.

Note: This list subjected to revision based fresh approval which will be intimated to PDD/ Vendor Cell.

ANNEXURE-II

LIST OF RECOMMENDED MANUFACTURER'S PRODUCTS

S. No.	MANUFACTURER NAME	P2 CHLORINATED RUBBER Zp PRIMER	P4 ETCH PRIMER/ WASH PRIMER	P6 EPOXY ZINC PH. PRIMER	F9 INORGANIC ZINC SILICATE PRIMER/ COATING
1.	ASIAN PAINTS (I) LTD.	ASIOCHL OR HB. ZN.PH PRIMER RO PC 168	APCONYL WP 636 (PC 335)	APCODUR HB. RO.ZP-PC433	APCOCIL 605
2.	BARGER PAINT LTD.	LINSOL HIGH BUILD ZP PRIMER	BISON WASH PRIMER	EPILUX 610	ZINC ANODE 304
3.	AMERON/ GODDLASS NEROLAC PAINTS LTD.	-	AMERCOAT 187	AMERCOAT 71	DIMET COTE-9
4.	JENSON & NICHOSON PAINTS LTD. AND CHOKUGU JENSON NICHOLSON	JENSOLAC CHLORINATED RUBBER HB ZN.PH. PRIMER	J & N ETCH PRIMER	EPILAC ZINC PHOSPHATE PRIMER	-
5.	SHALIMAR PAINTS LTD.	CHIOROKOTE ZINC PHOSPHATE PRIMER GREY	TUFFKOTE ETC PRIMER	EPIGUARD 4 ZINC PHOSPHATE PRIMER GREY	TUFFKOTE ZILICATE TL
6.	SIGMA COATING	SIGMA NUCOL UNICOAT 7321	SIGMA COVER PRIMER (7413)	COLTURE CM PRIMER 7412	SIGMASIL MC (7568)
7.	CDC CARBOLINE LTD.	-	-	CARBOLINE 893	CARBOZINC 11
8.	PRIMER PRODUCTS LTD.	-	-	P-15/3A U-16/92	U17/ 92 ETHYL SILICATE INORGANIC ZINC
9.	CORAMANDEL PAINTS CHEMICALS LTD.	COROCLORE CR HB. ZN. PH. PRIMER	CPC WASH PRIMER	COROPEX EPOXY ZH. PH. HIGH BILD PRIMER	-

S. No.	MANUFACTURER NAME	P2 CHLORINATED RUBBER Zp PRIMER	P4 ETCH PRIMER/ WASH PRIMER	P6 EPOXY ZINC PH. PRIMER	F9 INORGANIC ZINC SILICATE PRIMER/ COATING
10.	ANUPAM ENTERPRISES	ANUCHLOR ZP PRIMER	ANUPRIME 291	ANUPAM ANILICOR A-EZP-500	-
11.	GRAND POLYCOATS	GP CHILOROPRIME 601	GP PPRIME 401	-	-
12.	BOMBAY PAINTS LTD. THEMPEL MAKINE PAINTS	HEMPA TEX HIGHBUILD 4633	PENTOLITE WASH PRIMER 8520	HEMPEL'S SHOP PRIMER E-1530	GALVASOL 1570
13.	VANAPRABHA ESTERS & GLYCERIDES,	VEGCHLOR HB PRIMER 1143	VEG WASH PRIMER 1181	VEGPOX 1241 Z/ P	-
14.	SUNIL PAINTS AND VARNISHED PVT. LTD.	SUNCHLOR HB ZINC PHOSPHATE PRIMER	SUN WASH	SUNPOXY ZINC PHOSPHATE PRIMER	-
15.	COURTAULDS COATING LTD.	-	-	INTERGARD 251	INTERZINC
16.	MARK-CHEM INCOPORATED, (FOR PHOSPHATING CHEMICAL ONLY)	RUST PREVENTIVE LIQUID DRSAIO			
17.	VCM POLYURETHANE PAINTS (FOR POLY EURETHANE PAINTS ONLY)				
18.	JOTUN PAINTS			EPOXY CQ	JOTACOTE – 2

S. No.	MANUFACTURER NAME	P2 CHLORINATED RUBBER Zp PRIMER	P4 ETCH PRIMER/ WASH PRIMER	P6 EPOXY ZINC PH. PRIMER	F9 INORGANIC ZINC SILICATE PRIMER/ COATING
				SPECIAL ZINC PHOSPHATE PRIMER	
19.	KCC PRODUCTS (KOREA)				EZ 180(N)

LIST OF RECOMMENDED MANUFACTURER'S PRODUCTS (Contd.…)

S. No.	MANUFACTURER NAME	F2 ACRYLIC-POLY YURETHANE FINISH PAINT	F3 CHLORINATED RUBBER FINISH PAINT	F6 HIGH BUILD FINISH PAINT	F7 HIGH BUILD COAL TAR EPOXY COATING
1.	ASIAN PAINTS (I) LTD.	APCOTHANE CF76 (PC 1109)	ASIOCHLOR CF 621 (PC 161)	APCODUR HB COATING 9466	APCODUR CF 300
2.	BARGER PAINT LTD.	BARGER THANE ENAMEL (81)	LINOSOL CHLORINATED RUBBER HB COATING	EPILUX 04 AND 78 HB EPOXY COATING	EPILUX 555
3.	AMERON/ GODDLASS NEROLAC PAINTS LTD.	AMERCOAT 450GL	AMERCOAT 515	AMER COAT 383 HS	AMERCOAT 78 HB
4.	JENSON & NICHOSON PAINTS	J & N 993 HB POLYURETHANE	JENSON HB CHLORINATED	EPILAC 981 ENAMEL	EPILAC SOLVENTLESS COAT

S. No.	MANUFACTURER NAME	F2 ACRYLIC-POLY YURETHANE FINISH PAINT	F3 CHLORINATED RUBBER FINISH PAINT	F6 HIGH BUILD FINISH PAINT	F7 HIGH BUILD COAL TAR EPOXY COATING
	LTD. AND CHOKUGU JENSON NICHOLSON	FINISH PAINT.	RUBBER FINISH PAINT		TAR EPOXY COATING
5.	SHALIMAR PAINTS LTD.	SHALITHANE FINISH	CHLORKOTE FINISH	EPIGARD KL FINISH	BIPIGARD'S BLACK HB COAL TAR EPOXY COATING
6.	SIGMA COATING	SIGMADOUR HS SEMIGLOSS 7530	SIGMA NUCOL FINISH 7308	SIGMA COVER CM 7456	COLTURIET TCN 300
7.	CDC CARBOLINE LTD.	CARBOLINE 132	-	CARBOLINE 191	CARBOMASTIC-14
8.	PRIMER PRODUCTS LTD.	U3/ 92 POLYURETHANE	CR-71 FINISH PAINT	42B/ 4A HIGH BUILD EPOXY	350B/ 3A, COAL TAR EPOXY COATING
9.	CORAMANDEL PAINTS CHEMICALS	-	COROCLORE CR FINISHING	COROPEX EPOXY HB COATING	COROPEX EPOXY COAL TAR COATING
10.	ANUPAM ENTERPRISES	ANUTHANE ENAMEL	ANUCHLOR HB ENAMEL	DURACOAT-6000	COROGUARD
11.	GRAND POLYCOATS	GP COAT 131, 132 GP BOND 141	GP CHILOROGAURD 631	GP GUARD HP 234	POLYGUARD GE

LIST OF RECOMMENDED MANUFACTURER'S PRODUCTS

S. NO.	MANUFACTURER'S NAME	F2	F3	F6	F7
12.	BOMBAY PAINTS LTD./ PAINTS	PENTATHANE FP 4510	HEMPATEX HIBUILD 4633	HEMPADUR HIGH BUILD 5520	HEMPADUR 1510
13.	VANAPRABHA ESTERS & GLYCERIDES,	VEGTHANE FP 3641	VEGCHLOR FP 3140	VEGPOX- 3265 VEGPOX 3562	VEGPOX 4265
14.	SUNIL PAINTS AND VARNISHED PVT. LTD.	SUNTHANE (ALIPHATIC)	SUNCHLOR HB CR COATING	LPOXY HB 'PS 901'	LPOXY BLACK P. S. 551
15.	COURTAULDS COATING LTD.	INTERTHANE	-	INTEGARD EM SERIES	INTERTUF JXA 006/ 007/ 010
16.	MARK-CHEM INCOPORATED, (FOR PHOSPHATE PAINTS ONLY)				
17.	VCM POLYURETHANE PAINTS (FOR POLY EURETHANE PAINTS ONLY)	PIPCOTHANE ALIPHATIC POLYURETHANE FINISH PAINT			
18.	JOTUN PAINTS	HARDTOP AS		PENGUARD	JOTAGUARD 85
19.	KCC PRODUCTS (KOREA)			KOPOX TOPCOAT HB ET 5740	EH 173

LIST OF RECOMMENDED MANUFACTURER'S PRODUCTS

S. NO.	MANUFACTURER'S NAME	F-8 EPOXY MASTIC COATING SURFACE TOLERANT	F-11 HEAT RESISTANCE SYNTHETIC MEDIUM ALUMINUM PAINT	F-12 HEAT RESISTANCE SILICON AL. PAINT
1.	ASIAN PAINTS (I) LTD.	APCODOR CF 640	ASIAN HR ALUMINUM PAINT (PC 300)	HR SILICON ALUMINUM PAINT (PC 189)
2.	BARGER PAINT LTD.	PROTECTOMASTIC	FERROLOT HR ALUMINUM PANT	BARGER HEAT RISISTANT SILICON ALUMINUM PAINT
3.	AMERON/ GODDLASS NEROLAC PAINTS LTD.	AMERLOCK 400		AMERCOAT 878
4.	JENSON & NICHOSON PAINTS LTD. AND CHOKUGU JENSON NICHOLSON	-	FERROTECT SYNTHETIC RUBBER H/R ALUMINUM PAINT 4000	FERRLOTECT SILICON HEAT RESISTANCE 1000
5.	SHALIMAR PAINTS LTD.	EPIPLUS 56	HEAT RESISTING LUSTROL ALUMINUM	LUSTOTHERM HIGH TEMP ALUMINUM PAINT
6.	SIGMA COATING	SIGMA ETPC ALUMINUM	HIGH TEMPERATURE RESISTANT EPOXY SUSTEM UPTO 200° C 4062	AROSTA FINISH HR
7.	CDC CARBOLINE LTD.	CARBOMASTIC-15	CARBOLINE 1248	CARBOLINE 4674
8.	PRIMER PRODUCTS LTD.	HB EPOXY MATIC 150B/ 150A		
9.	CORAMANDEL PAINTS CHEMICALS	-	SILVOTOL HR ALUMINUM PAINT	CPC SILICONE HR ALUMINUM PAINT
10.	ANUPAM ENTERPRISES	ANUMASTIC-102	-	ANUPAM HEAT GUARD

LIST OF RECOMMENDED MANUFACTURER'S PRODUCTS

S. NO.	MANUFACTURER'S NAME	F8	F11	F12
11.	GRAND POLYCOATS	GP PRIME GUARD 235		-
12.	BOMBAY PAINTS LTD./ HEMPEL MARINE PAINTS	HEMPADUR 1708	KANGAROO HHR ALUMINUM 4950	HEMPADUR HIGH BUILD 5520
13.	VANAPRABHA ESTERS & GLYCERIDES,	VEGEPOX MASTIC 2255	VEG HR AL PAINT TO IS211339	VEG HHR AL PAINT TO 600°C
14.	SUNIL PAINTS AND VARNISHED PVT. LTD.	LPOXY HIGHBUILD P.S.901	-	-
15.	COURTAULDS COATING LTD.	INTERPLUX	-	INTERTHERM 50
16.	MARK-CHEM INCOPORATED, (FOR PHOSPHATE PAINTS ONLY)			
17.	VCM POLYURETHANE PAINTS (FOR POLY EURETHANE PAINTS ONLY)	-		
18.	JOTUN PAINTS	JOTUMATIC 87		SOLVELITT HEAT RESISTANT SILICON PAINT
19.	KCC PRODUCTS (KOREA)	EH 4158H		QT 606

Rev. : 0
Edition : 1

SPECIFICATION

FOR

REPAIR OF PIPELINE CORROSION COATING

SPECIFICATION NO.: MEC/S/05/21/08

(OIL & GAS SBU)
MECON LIMITED
DELHI 110 092

MECON LIMITED REGD. OFF: RANCHI 834002	STANDARD TECHNICAL SPECIFICATION OIL & GAS SBU, DELHI		
TITLE	REPAIR OF PIPELINE CORROSION COATING	DOCUMENT NO. MEC/S/05/21/08	Page 1 of 1 REVISION : 0 EDITION : 1

CONTENTS

SL.NO.	DESCRIPTION
1.	SCOPE
2.	MATERIAL AND EQUIPMENT
3.	APPLICATION PROCEDURE
4.	INSPECTION/ TEST
5.	HOLIDAY INSPECTION
6.	DOCUMENTATION

PREPARED BY:	CHECKED BY:	APPROVED BY:	ISSUE DATE :
(Shalini Singh)	(Sunil Kumar)	(A.K. Johri)	Nov. 2008

1.0 **SCOPE** :

This specification covers the minimum requirement of material and equipment, installation procedure and inspection of repair of damaged polyethylene coatings on steel pipes.

1.1 The repair shall be carried out using repair patch made of radiation crosslinked Polyolefin backing, coated on the inside with semi-crystalline thermoplastic Adhesive and filler mastic

1.2 The repair patch shall have thermal indicators to ensure correct heat is being applied during application.

2.0 MATERIAL AND EQUIPMENT

2.1 CONTRACTOR shall supply all ,equipment and manpower required for a skillful and adequate application in the field in accordance with the specification.

2.2 The repair material shall be :

- Repair patch shall be cross linked polyolefin with semi-crystalline thermoplastic adhesive (PERP 80 patch make of Covalence Raychem or equivalent).
- Filler mastic : PERPFILLER of make Covalence Raychem or equivalent.
- PERP melt stick of make Covalence Raychem or equivalent.
- Certified by DIN to meet the requirement of EN12068 stress class CHT 80.

2.3 The material shall not be older than their period of validity at the time of Application by CONTRACTOR. Deteriorated/decomposed materials shall not be used.

2.4 Material shall be stored in sheltered storages in the manufacturer's original packing and away from direct sunlight and in accordance with manufacturer's recommendations.

3.0 **APPLICATION PROCEDURE**

The application procedure to be followed for Holiday type of damage shall be in accordance with manufacturer's instructions and minimum requirements specified below whichever is more stringent.

Preparation : Remove coating from damaged area with knife, scraper or power brush. Scrap off the damaged area and adjacent coating to remove oil, grease, ruse dirt and moisture.

Preheating : Preheat the exposed bare metal surface to about 80°C and adjacent pipe coating to about 60°C with a torch moved back and forth over the surface.

Application of the Filler : Plastic filler shall be applied to all exposed metal surface. The mastic is heated and smoothed down with a paint scraper to cover all bare metal in a manner such that all entrapped air is removed.

Application of repair tape : Cut a patch from the tape in a manner such that it extends 50 mm beyond the damaged area, position it over the damaged area, heat until the temperature sensitive paint on the outside of the patch changes colour. It shall be smoothed down to confirm with the contour of lap, and shall be freed of any air bubbles or wrinkles.

For cosmetic type of defects such as minor gauging tearing, scratches which do not indicate holiday during holiday inspection, following procedure shall be adopted :

The defect area shall be roughened to remove loose polyethylene coating, oil grease, dirt etc.

This shall be followed by application of repair patch as described above.

4.0 INSPECTION, TEST

A visual inspection shall be carried out for the following :

- Mastic extrusion on ends of the patch shall be examined.
- There shall be no sign of punctures or pin holes or bend failure. The external appearance of the patch shall be smooth, free from dimples, air entrapment or void formation.
- The entire repair patch shall have changed colour uniformly.

5.0 HOLIDAY INSPECTION

- The holiday detector used shall be checked and calibrated easily with an accurate D.C. Voltmeter. The detector electrode shall be in direct contact with the surface of coating to be inspected.

- The entire surface of the repaired section shall be inspected by means of a full circle holiday detector approved by company set to a DC Voltage of at least 25 KV. Inspection of repaired patch shall be conducted only after it has cooled below 50°C.

- No repaired point shall be covered or lowered in the trench until it has been approved by the COMPANY.

- Procedure qualification shall be carried out for repair patch. The value for peel strength to pipe surface and to factory coating carried out as per EN 12068 shall be 0.5 N/mm minimum at 60°C.

6.0 DOCUMENTATION

6.1 Prior to procurement of coating repair materials, Contractor shall furnish four copies of, but not limited to, the following for qualification of the Manufacturer and material :

i) Complete descriptive technical catalogs describing the materials offered alongwith samples of repair coating materials, its properties and installation instruction as applicable specifically to the project.

ii) Test certificate and results of previously conducted tests from independent inspection agency.

iii) Reference list of previous supplies of the similar material indicating the project details such as diameter, quantity, service conditions, year of supply, project name, contact person and feed back on performance.

Once the Company's approval has been given, any change in material or Manufacturer shall be notified to Company, whose approval in writing of all changes shall be obtained before the materials are manufactured.

6.2 Prior to shipment of materials from the Manufacturer's works. Contractor shall furnish six copies of the following :

i) Test Certificates for each batch of materials.
ii) Specific installation instruction with pictorial illustrations.
iii) Specific storage and handling instructions.

6.3 All documents shall be in English Language only.

Rev. : 0
Edition : 1

SPECIFICATION
FOR
PIPELINE MARKERS

SPECIFICATION NO.: MEC/S/05/21/10

(OIL & GAS SBU)
MECON LIMITED
DELHI 110 092

CONTENTS

SL.NO.	DESCRIPTION
1.0	SCOPE
2.0	REFERENCE CODES AND DRAWINGS
3.0	GENERAL
4.0	AERIAL MARKERS
5.0	KILOMETRE MARKERS
6.0	PIPELINE WARNING SIGN
7.0	ROW BOUNDARY MARKERS
8.0	DIRECTION MARKERS
9.0	NAVIGABLE WATERWAY PIPELINE CROSSING WARNING SIGN

REFERENCE DRAWINGS

MECON STANDARD DRAWINGS

MEC/TYP/05/21/10/001	:	TYPICAL ROW BOUNDARY MARKER
MEC/TYP/05/21/10/002	:	K.M. POST
MEC/TYP/05/21/10/003	:	PIPELINE WARNING SIGN
MEC/TYP/05/21/10/004	:	NAVIGABLE WATERWAY PIPELINE CROSSING WARNING SIGN
MEC/TYP/05/21/10/005	:	AERIAL MARKER
MEC/TYP/05/21/10/006	:	DIRECTION MARKER

1.0 **SCOPE**

1.1 This specification covers the minimum requirements for supply, fabrication and erection of pipeline markers to be installed by CONTRACTOR at various locations along the route of a cross-country pipeline.

1.2 This specification shall be read in conjunction with the conditions of all specifications and documents included in the CONTRACT between COMPANY and CONTRACTOR.

2.0 **REFERENCE CODES**

Reference has been made in this specification to the latest revision of the following code :

API RP 1109 : Recommended practice for marking liquid petroleum pipeline facilities.

3.0 **GENERAL**

3.1 CONTRACTOR shall supply, fabricate and install the pipeline markers along the pipeline route. The locations of markers as indicated in the approved drawings shall be treated for guidance purposes only and the exact location of the markers shall be based on AS BUILT drainage and as directed by COMPANY.

3.2 The pipeline markers shall be fabricated, painted (Painting shall be in accordance with the MECON Standard Specification for Shop & Field Painting) and installed in accordance with the MECON standard drawings included herein. Before start of fabrication of the markers, CONTRACTOR shall prepare and submit for COMPANY's approval the detailed scheme for the marker plates as applicable for the project.

3.3 The pipeline markers shall be installed, as far as possible, at locations such that to cause no hindrance to the regular use of the land or to the traffic.

4.0 **AERIAL MARKERS**

Aerial markers shall in general be installed along the pipeline at every five (5) kilometres intervals and at places specified by COMPANY. Refer MECON Standard Drawing No. MEC/TYP/05/21/10/005 for details.

5.0 **KILOMETRE MARKERS**

Kilometre markers shall in general be installed along the pipeline between the aerial markers at every one (1) kilometre interval. Markers shall indicate cumulative distance in kilometres from the reference station, as directed by COMPANY. A kilometre marker is not required if the relative length between its location and any pipeline warning sign is less than 200 metres. Refer MECON Standard Drawing No. MEC/TYP/05/21/10/002 for details.

6.0 PIPELINE WARNING SIGN

Pipeline Warning Sign shall in general be installed at

- National and State Highway Crossings (2 Nos.)
- Other Road Crossings (1 No.)
- Railway Crossings (2 Nos.)
- Minor Water Crossings (less than 15m width) (1 No.)
- Minor Water Crossings (above 15m width) (2 Nos.)
- Major Water Crossings (2 Nos.)
- Valve Station (1 No.)
- And at any other location as shown in the approved drawings and as directed by the COMPANY.

Pipeline Warning Sign shall identify the existence of the pipeline and display the name of the COMPANY, with an emergency telephone number, as shown in MECON Standard Drawing No. MEC/TYP/05/21/10/003 for details.

7.0 ROW BOUNDARY MARKERS

Right-of-Way boundary markers shall be fabricated and installed as per the drawings at every 250 metres interval along the entire pipeline route. These shall be installed on either side of the pipeline alignment to define the ROW boundary limits. These shall also be installed at pipeline turning points to maintain the continuity of the ROW limits. Refer MECON Standard Drawing No. MEC/TYP/05/21/10/001 for details.

8.0 DIRECTION MARKERS

Direction markers as shown in MECON Standard Drawing No. MEC/TYP/05/21/10/006 shall be installed to identify the significant turning points of the pipeline during aerial traverse. One direction marker shall be installed at each turning point, in addition, two more direction markers shall be installed along the pipeline alignment, one on either side of the turning point at 200m from the turning point.

9.0 SPECIAL MARKERS

As directed by Company, Special Marker shall be installed at Location where the following changes takes place :

- Change in pipeline diameter and wall thickness.
- Change in type of pipe.
- Change in class locations for pipeline conveying gas.

The above data may be provided on other types of marker (except RoU boundary marker), if the relative distance between the two does not exceed 100 m.

10.0 NAVIGABLE WATERWAY PIPELINE CROSSING WARNING SIGN

The Navigable Waterway Pipeline Crossing Warning Sign shall be fabricated in accordance with MECON Standard Drawing No. MEC/TYP/05/21/10/004. Such Warning Sign shall be installed one on each bank of navigable water courses at the pipeline crossing location, in lieu of the Pipeline Warning Sign described in clause 6.0 of this specification.

Rev. : 0
Edition : 1

SPECIFICATION
FOR
FLUSHING AND TESTING OF
PIPING SYSTEMS

SPECIFICATION NO.: MEC/S/05/21/11

(OIL & GAS SBU)
MECON LIMITED
DELHI 110 092

MECON LIMITED REGD. OFF: RANCHI 834002	STANDARD TECHNICAL SPECIFICATION OIL & GAS SBU, DELHI		
TITLE	FLUSHING AND TESTING OF PIPING SYSTEMS	DOCUMENT NO. MEC/S/05/21/11	Page 1 of 1 REVISION : 0 EDITION : 1

CONTENTS

SL. NO.	DESCRIPTION
1.0	SCOPE
2.0	REFERENCES
3.0	INSPECTION
4.0	FLUSHING
5.0	TESTING
5.1	EXTENT OF TESTING
5.2	GENERAL REQUIREMENT/TEST PREPARATION FOR TESTING
5.3	TESTING MEDIA, TEST PRESSURE AND TEST PRESSURE GAUGES.
5.4	TESTING PROCEDURE
5.5	COMPLETION OF TESTING
5.6	TEST RECORDS

PREPARED BY:	CHECKED BY:	APPROVED BY:	ISSUE DATE :
(Shalini Singh)	(Sunil Kumar)	(A.K. Johri)	Dec. 2008

1.0 SCOPE

This specification covers the general requirements for Inspection, flushing and testing of piping systems. However testing of steam lines falling under IBR shall also be governed by Indian Boiler Regulations.

Flushing and testing of all piping system shall be witnessed by the Consultant Representative / Engineer-in- Charge.

2.0 REFERENCE

ASME B31.3-2004 : Process Piping

IBR : Indian Boiler Regulations

3.0 INSPECTION

During various stage and after completion fabrication and erection, the piping system shall be inspected by the Consultant Representative / Engineer- in - Charge to ensure that :

- Proper piping material has been used.
- Piping has been erected as per drawings and the instruction of the engineer- in charge.
- All supports have been installed correctly.
- Test preparations mentioned in this specification have been carried out.

4.0 FLUSHING

Flushing of all lines shall be done before pressure testing.

Flushing shall be done by 'fresh potable water' or 'dry compressed air, wherever water flushing is not desirable' to clean the pipe of all dirt, debris or loose foreign materials.

Required pressure of water, flushing shall meet the fire hydrant pressure or utility water pressure. For air flushing the line, system will be pressurised by compressed air at the required pressure which shall be 50 psi maximum. The pressure shall then be released by quick opening of a valve, already in the line for this purpose. This procedure shall be repeated as many times as required till the inside of the pipe is fully cleaned.

In line instruments like control valves, orifice plates, rotameters, safety valves and other instruments like thermowells which may interfere with flushing shall not be included i m the flushing circuit.

From all permanent strainers the screens/meshes shall be removed before flushing. Screens/meshes shall be re- installed after flushing but before testing.

During flushing temporary strainers shall be retained. These shall be removed, cleaned and reinstalled after flushing, but, before testing.

In case an equipment such as column, vessel, exchanger etc. forms part of a piping circuit during flushing, this shall be done with the approval of Engineer- in - Charge. However equipment thus included in the circuit, shall be completely cleaned and dried with comprss4ed air, after flushing is completed.

During flushing discharged water/air shall be drained at the place directed the Engineer- in - Charge. If necessary, proper temporary drainage shall be provided by the contractor.

Care shall be taken during flushing so as not to damage/spoil work of other agencies. Precautions shall also be taken to prevent entry of water/foreign matter into equipment, electric motors, instruments, electrical installations etc. in the vicinity of lines being flushed.

The contractor shall carry out all the activities required before, during and after the flushing operation, arising because of flushing requirements, such as but not limited to the following.

Dropping of valves, specials, distance pieces, online instruments and any other piping part before flushing. The flanges to disengaged for this purpose shall be envisaged by the contractor and approved by the Engineer-in-Charge. These flanges shall be provided with temporary gaskets at the time of flushing.

After flushing is completed and approved, the valve, distance pieces, piping specials etc. shall be re-installed by the contractor with permanent gaskets. However, flanges of equipment nozzles and other places where isolation is required during testing, only temporary gaskets shall be provided.

Records in triplicate shall be prepared and submitted by the Contractor for each piping system for the flushing done in the proforma provided / approved by EIC.

5.0 TESTING

Pressure testing, in general shall be as per clause 345 of ASME B31.3, unless otherwise specified, herein. Lines carrying highly hazardous / poisonous fluids must have a sensitive leak test. For IBR lines, 'IBR Regulations' shall also be followed.

5.1 Extent of testing

With the exclusion of instrumentation. piping system fabricated or assembled in the field shall be tested irrespective of whether or not they have been pressure tested prior to site welding of fabrication.

To facilitate the testing of piping systems, vessels and other equipments may be included in the system with the prior approval of Engineer-in-charge, if the test pressure specified is equal to or less than that for the vessels and other equipments.

Pumps, compressors and other votary equipments shall not be subjected to field test pressures.

Lines which are directly open to atmosphere such as vents, drains, safety valves, discharge need not be tested, but all joints shall be visually inspected wherever necessary such lines shall be tested by continuous flow of fluid to eliminate the possibility of blockage. However, such lines if provided with block valve shall be pressure tested upto the first block valve.

Seats of all vales shall not be subjected to a pressure in excess of the maximum cold welding pressure of the valve. Test pressure applied to vales shall not be grater than the manufacturer is recommendation nor less than that required by the applicable code. Where desirable set pressure is less than test pressure, test shall be made through an open valve.

Instruments in the system to be tested, shall be excluded from the test by isolation or removal, unless approved otherwise by the Engineer-in-charge. Restrictions which interfere with filling, venting and drawing such as orifice plates etc. shall not be installed unless testing is complete.

Control valves shall not be included in the test system. Where by-passes are provided test shall be performed through the by-pass end/or necessary spool shall be used in place of the control valve.

Pressure gauges which are part of the finished system, but cannot withstand test pressure shall not be installed until the system has been tested. Where piping systems to be tested are directly connected at the battery limits to piping for which the responsibility tests with other agencies, the piping to be tested shall be isolated from such piping by physical disconnection such as valves or blinds.

5.2 General Requirement/Test preparation for Testing

Test shall be carried out with permanent gaskets installed unless specified otherwise or instructed by the Engineer-in- charge.

No pressure test shall be carried out against close valve unless approved by the Engineer-in-charge.

The Engineer-in-charge shall be notified in advance by the contractor, of the testing sequence and programme, to enable him to be present for witnessing the test. The contractor shall be fully responsible for making arrangements with the local boiler inspector to witness the tests for steam lines falling under IBR. IBR certificates for these tests shall be obtained in the relevant IBR forms and furnished to the Engineer-in-charge. Before testing, all piping shall be cleaned by flushing to make it free from dist loose scale, debris and other loose foreign materials.

All piping systems to be hydrostatically tested shall be vented at the high points and the systems purged of air before the test pressure is applied.

Wherever in the line any void is existing due to any reasons, for absence of control valve, safety valve, check valves etc. it shall be filled with temporary spools.

All joints welded, screwed or flanged shall be left exposed for examination during the test. Before pressuring the lines, each weld joint shall be cleaned by wire brush to free it from rest and any other foreign matter.

Where a system is to be isolated of a pair of companion flanges, a blank shall be inserted between the companion flanges. Minimum thickness of the blank shall be designed in accordance with applicable design code.

Open ends of piping system where blanks cannot be used, such as pumps, compressors, turbines or wherever equipment or pipe spool have been receivered or disconnected prior to hydrostatic testing, shall be blinded – off by using standard blind flanges of same rating as the piping system being tested.

Pressure gauges used in testing shall be installed as close as possible to the lowest point in the piping system to be tested, to avoid overstressing of any of the lower portion of the system. For longer lines and vertical lines, two or more pressure gauges shall be installed at locations selected by the Engineer-in-charge. For lines containing check valves any of the following alternatives shall be adopted for pressure testing. Wherever possible pressurise up-stream side of valve.

Replace the valve by a temporary spool and re-install the valve after testing.

Provide blind on valve flanges and test the upstream and downstream of the line separately and remove the blind after testing. All these flanges, temporary gaskets shall be provided during testing and shall be replaced by permanent gaskets subsequently. For check valves in lines 1-1/2" and below, flapper or seat shall be

removed during testing (if possible). After completion of testing the flopper/ seat shall be refitted.

Gas lines when hydrostatically tested shall be provided with additional temporary supports during testing as directed by Engineer-in-charge.

Piping which is spring or counter – weight supported shall be temporarily supported, where the weight of the fluid would overload the support. Retaining pins for spring supports shall be removed only after testing is completed and test fluid is completely drained.

When testing any piping system, air or steam of approximately 2 kg/cm^2 (g) may be used as preliminary test to detect missing gaskets etc. as this avoids the necessity of purging the gas to make repairs. However, this method may not be used for this purpose, if the steam temperature is more than the design temp. of the line.

For jacketed pipes testing of core pipes shall be done on individual pieces where the pipe is continuously packed, before it is jacketed. The outer jacket shall be tested separately as a system for piping with discontinuous jacketing, the core pipe and the jacket shall be tested as separate system.

5.3 Testing Modes, Test pressure and Test Pressure Gauges

5.3.1 Testing Modes

In general all pressure test shall be hydrostatic using iron free water, which is clean and free of silt. Maximum clorine content in water for hydrostatic testing for MS piping shall be 15-20 ppm. Air shall be used for testing only if water would cause corrosion of the system or overloading of supports etc. in special cases as directed by Engineer-in-charge.

If operating fluid in the line is much lighter than testing fluid, the additional weight of testing fluid may render piping supports (as designed) inadequate. This will call for additional temporary supports. The typical examples are flare and vapor lines. It is preferable that hydrostatic testing is avoided in such systems and instead pneumatic testing may be specified.

Where air/water tests are undesirable substitute fluid such as gas, oil, methanol etc. shall be used as the testing medium, with due consideration to the hazards involved. These test fluids shall be specified in the line list given to the contractor.

5.3.2 Test Pressure

The hydrostatic/pneumatic test pressure shall be as indicated in the line list or as per the instruction of Engineer-in-charge.

The selection of the piping system for one individual test shall be based on the following :-

Test pressure required as per line list.

Maximum allowable pressure for the material of construction of piping depending upon the above requirements and based on construction progress, maximum length of piping shall be included in each test.

5.3.3 Test Pressure Gauge

All gauge used for field testing shall have suitable range so that the test pressure of the various system falls in 35% to 65% of gauge scale range. Pressure gage shall be minimum of 150 mm. Size of Bourdon shall not be less than 75% of nominal diameter of dial range. Gauge shall be of a good quality and in first class working condition.

Prior to the start of any test or periodically during the field test programmes, all test gauges shall be calibrated using a standard dead weight gauge tester or other suitable approved testing apparatus. Any gauge having an incorrect zero reading or error of more than ± 2% of full scale range shall be discarded. The Engineer-in-charge shall check the accuracy of master pressure gauge used for calibration.

5.4 Testing Pressure

5.4.1 Hydrostatic Test

All vents and other connections used as vents shall be kept open while filling the line with test fluid for complete removal of air. For pressurising and depressurising the system, temporary isolating valves shall be provided if valves, vents, drains do not exist in the system.

Pressure shall be applied only after the system/line is ready and approved by the Engineer-in-charge.

Pressure shall be applied by means of a suitable test pump or other pressure source which shall be isolated from the system as the desired test pressure is reached and stabilised in the system.

A pressure gauge shall be provided at the pump discharge for guiding the system to the required pressure.

The pump shall be attended constantly during the test by an authorised person. The pump shall be isolated from the system wherever the pump is to be left unattended.

Test pressure shall be maintained for a sufficient length of time to permit through inspection of all joints for leakage or signs of failure. Any joint found leaking during a pressure test, shall be re-tested to the specified pressure after repair. Test period shall be maintained for a minimum of four hours.

The pump and the piping system to be tested are to be provided with separate pressure indicating test gauges. There gauges are to be checked by the standard test gauge before each pressure test.

Care shall be taken to avoid increase in the pressure due to atmospheric variation during the test.

5.4.2 Air Test

When testing with air, pressure shall be supplied by means of a compressor. The compressor shall be portable type with a receiver after cooler & oil separator.

Piping to be tested by air shall have joints covered with a soap and water solution so that the joints can be examined for leaks.

All other activities shall be same as per hydrotesting procedure (specified above).

5.5 Completion of Testing

After the hydrostatic test has been completed, pressure shall be released in a manner and at a rate so as not to endanger personnel or damage equipments.

All vents and drains shall be opened before the system is to be drained and shall remain open till all draining is complete, so as to prevent formation of vacuum in the system. After draining lines/systems shall be dried by air.

After testing is completed the test blinds shall be removed and equipment/piping isolated during testing shall be connected using the specified gaskets, bolts and nuts. These connections shall be checked for tightness in subsequent pneumatic tests to be carried out by the contractor for complete loop/circuit including equipments (except rotary equipments).

Pressure tests shall be considered complete only after approved by the Engineer-in-charge. Defects, if any, noticed during testing shall be rectified immediately and retesting of the system/line shall be done by the contractor at his cost.

5.6 Test Records

Records in triplicate shall be prepared and submitted by the contractor for each piping system, for the pressure test done in the proforma provided / approved by the Engineer-in-charge.

SPECIFICATION
FOR
CASING INSULATORS
AND END SEALS

SPECIFICATION NO. MEC/S/05/62/12

(PROCESS & PIPING DESIGN SECTION)
MECON LIMITED
DELHI - 110 092

CONTENTS

PART-A CASING INSULATIONS

1.0 SCOPE

2.0 FUNCTION

3.0 DESIGN

4.0 MATERIAL

5.0 INSPECTION AND TESTING

PART-B CASING END-SEALS

1.0 SCOPE

2.0 FUNCTION

3.0 DESIGN

4.0 MATERIAL

5.0 INSPECTION AND TESTING

PART-C SUPPLEMTARY REQUIREMENTS

PART-A CASING INSULATORS

1.0 SCOPE

This specification covers the minimum requirements of design, material, manufacture and supply of casing insulators intended to be used for cased pipeline crossings.

2.0 FUNCTION

Pipeline insulators shall be used to support the carrier pipe inside the casing pipe and electrically isolate the carrier pipe from the casing pipe at the cased crossings.

The casing insulators shall:

- Resist cold flow and will not soften at design temperature.
- Resist corrosion
- Resist mechanical damage while being pulled into the casing.
- Have high electrical insulating value and low water absorption, thus preventing leakage and maintain electrical isolation between carrier and casing pipes
- Have high compressive strength in order to assure a permanent support to the carrier pipe.

3.0 DESIGN

The arrangement of insulator shall be generally in accordance with Fig. 3.0. It shall be made in segments duly held together with cadmium plated bolts and nuts, to be supplied with casing insulators.

The number of segments shall be two for pipe diameters upto 12" (generally). For larger diameters, the number of segments may be more than two, but their number shall be kept minimum.
The skid height shall be such that it is slightly less than the value obtained by following formula.

Casing internal dia-carrier outer dia
2

Manufacturer shall obtain prior approval from COMPANY on casing insulators drawings/designs.

4.0 MATERIAL

Casing insulators shall be made of injection moulded high density polyethylene or other material equivalent or superior as approved by COMPANY and shall meet the following specifications:

Property	Value	ASTM Test Method
Dielectric strength	450-500 Volts/Mil	D-149
Compresssive strength	3200 psi	D-695i
Tensile strength	3100-5000	D-638, D-651
Impact strength	4.Oft. 1b./inch of notch	D-256
Water Absorption	0.01%	D-570

5.0 INSPECTION AND TESTING

Manufacturer shall furnish material test certificates of the components used in the assembly of casing insulations as per the requirements of clause 4.0 of this specification.

PART-B CASING END-SEALS

1.0 SCOPE

This specification covers the minimum requirements of design, material, fabrication and supply of casing end-seals intended to be used for pipeline cased crossings.

2.0 FUNCTION

Casing end seals are intended to be used for sealing the annular space between casing pipe and carrier pipe at casing ends so as to prevent ingress of moisture and water.

3.0 DESIGN

The scale shall be suitable for the casing and carrier pipe diameters as applicable for each case.

The casing end-seal shall be flexible to cater for the expansion and contraction of carrier and casing pipes and shall be able to tolerate both angular and concentric misalignment of casing pipe without loss of sealing efficiency.

The design of the casing end-scale shall permit easy installation of the seal to the cased pipeline crossing.

It shall provide moisture-proof seals when installed for the entire anticipated life of the buried pipeline.

Manufacturer shall obtain prior approval from COMPANY on casing end seals design/drawings.

4.0 MATERIAL

The casing end-scale shall be made of head shrink high density radiation crosslinked polyethylene with an adhesive having a melt point suitable for the pipeline service temperature and ambient temperatures foreseen during construction. End-seals material shall be resistant to heat, cold, vibration, impact, abrasion, corrosive fluids, disbonding, organic and bio-deterioration. Manufacturer shall confirm compatibility of end seals with carrier pipe coating.

Casing end seals shall meet following minimum property requirements:

Property	Minimum Value	Test Method
a) Backing (Sleeve and closure patch)		
Tensile strength	2200 psi	ASTM D-638
Ultimate Elongation	400%	ASTM D-638
Heat Shock	No visual cracks, flow or drips (at 225°C, 4 hours)	ASTM D-2671
b) Adhesive		
Ring and Ball softening point	90°C	ASTM E-28
Lap Shear	60°C - 25 psi 23°C - 250 psi (2 inch/min)	ASTM D-1002
c) System (as applied)		
Peel strength (To casing and carrier pipe and closure patch)	5 pli (10 inch/min.)	ASTM D-1000

5.0 INSPECTION AND TESTING

Manufacturer shall furnish material test certificates of the components used in the assembly of casing end-seals as per the requirements of this specification.

PART-C SUPPLEMENTARY REQUIREMENTS

1.0 The Manufacturer shall replaces, at no extra cost, any material not conforming to the material and performance requirements of this specification.

2.0 Manufacturer shall submit detailed specification of the materials used in the assemblies, along with instructions for handling, use and installation of the material for COMPANY approval prior to procurement.

3.0 Manufacturer shall submit all the documents, test reports, records and other information in six copies to the COMPANY for record after approval as per clause 2.0 above.

Rev. : 0
Edition : 1

SPECIFICATION

FOR

FIELD JOINT COATING (ONSHORE PIPELINES)

SPECIFICATION NO.: MEC/S/05/21/13

(OIL & GAS SBU)
MECON LIMITED
DELHI 110 092

CONTENTS

SL. NO.	DESCRIPTION
1.0	SCOPE
2.0	REFERENCE DOCUMENTS
3.0	MATERIAL AND EQUIPMENT
4.0	APPLICATION PROCEDURE
5.0	INSPECTION
6.0	TESTING
7.0	REPAIRS
8.0	DOCUMENTATION

1.0 SCOPE

This specification covers the minimum requirements of materials, equipment and installation of field joint anti-corrosion coating of underground onshore factory coated pipelines with either three layer polyethylene or fusion bonded epoxy (FBE) coating by heat shrink wraparound sleeves conforming to DIN EN 12068 – "Cathodic Protection – External Organic Coatings for the Corrosion Protection of Buried or Immersed Steel Pipelines used in Conjunction with Cathodic Protection – Tapes and Shrinkable Materials" and the requirements of this specification. Unless modified / replaced by this specification, all requirements of DIN EN 12068 shall remain fully applicable and complied with.

This specification shall be read in conjunction with the conditions of all specifications and documents included in the Contract between Company and Contractor. Unless specified otherwise, all sections of this specification shall apply to all specifications referred in this specification.

2.0 REFERENCE DOCUMENTS

Reference has been made to the latest edition (edition enforce at the time of floating the enquiry) of the following standards, codes and specifications:

a) ASTM D-149 : Standard Test Methods of Dielectric Breakdown voltage and Dielectric Strength of solid electrical insulating materials at commercial frequencies.

b) ASTM D-257 : Standard Test Methods for D-C Resistance or conductance of insulating materials.

c) ASTM D-570 : Standard Method of Test for Water Absorption of Plastics.

d) ISO 8502-3 : Preparation of Steel Stubstrates before Application of Paints and Related Products – Part-3 – Assessment of Dust on Steel Surfaces Prepared for Painting (Pressure Sensitive Tape Method).

e) ISO:8503-1 : Part-1 : Specification and definitions for ISO surface profile comparator for the assessment of abrasive blast cleaned surfaces.

f) ISO:8503-4 : Part-4 : Methods for calibration of ISO surface profile comparator and for the determination of surface profile – Stylus instrument procedure.

g) SIS-055900 : Pictorial surface Preparation Standard for Painting Steel Surfaces.

h) SSPC-SP 1 : Steel Structure Painting Council.

In case of conflict between the requirements of this specification and that of above referred documents, the requirements of this specification shall govern.

The Contractor shall be familiar with the requirements of these documents and shall make them readily available at the site to all personnel concerned with carrying out the works specified in this specification.

3.0 MATERIALS AND EQUIPMENT

3.1 Contractor shall supply joint coating materials, all equipment and manpower required for a skillful and adequate application of coating in the field in accordance with the specifications.

Contractor shall submit and demonstrate to Company proposed materials and works procedures for applying field coating and repair procedures for same. These proposed procedures and all materials, equipment and tools used in the work shall be subject to Company's approval.

3.2 Field Joint Corrosion Coating Material

Field joint anti-corrosion coating material shall be either heat shtrinktable wraparound sleeve or cold applied tape suitable for a maximum operating temperature of (+) 65°C (T_{max}) and shall conform to designation EN 12068 – C HT 60 UV. In addition the field joint anti-corrosion coating shall comply the requirements specified in para 3.3 of this specification.

3.2.1 Heat Shrinkable Wraparound Sleeve

Heat shrinkable wrap around sleeve shall consist of radiation cross-linked thermally stabilised, ultraviolet resistant semi-rigid polyolefin backing with a uniform thickness of high shear strength thermoplastic/copolymer hot melt adhesive. The joint coating system may consist of a solvent free epoxy primer applied to the pipe surface prior to sleeve application. The backing shall be coated with thermochrome paint which will change colour when the desired heat during shrinking is attained. The wraparound sleeve shall be supplied in pre-cut sizes to suit the diameter and the requirements of overlap.

The total thickness of heat shrinkable wraparound sleeve in the as applied condition shall be as follows :

Pipe Size (Specified Outside Diameter)	Thickness (mm)	
	On Pipe Body (Min.)	On Weld Bead (Min.)
4" (114.3 mm) to 10" (273.0 mm)	2.0 mm	1.6 mm
12" (323.9 mm) to 18" (457.2 mm)	2.2 mm	1.8 mm
20" (508.0 mm) to 30" (762.0 mm)	2.5 mm	2.0 mm
≥ 32" (812.8 mm)	3.0 mm	2.5 mm

The heat shrink wraparound sleeve shall have the required adhesive properties when applied on various commercial pipe-coating materials. The pre-heat and application temperatures required for the application of the shrink sleeve shall not cause loss of functional properties of the pipe coating.

Heat shrinkable wraparound field joint coating system manufactured by M/s Covalence and M/s Canusa are acceptable for the supply of field joint coating materials. The Contractor shall propose the specific grade of field joint coating system meeting the requirements of this specification from these manufacturers. In case the Contractor proposes to supply heat shrinkable wraparound sleeve from any other manufacturer, then the Contractor shall propose only those coating systems that have been previously used for pipelines of size same or higher than the size indicated in tender, for a length of 50 km and above in a single project for similar operating conditions.

3.2.2 **Cold Applied Tapes**

Cold applied tape system shall comprise of primer, an inner wrap and an outer wrap. The inner and outer wraps shall be asymmetric 3-ply tape with co-extruded polyethylene carrier film and butyl rubber adhesive layers on both sides. The inner layer of butyl rubber adhesive of inner wrap shall have a thickness of min. 1.0 mm. The inner and outer wraps are to be spirally wrapped with 55% overlap, equivalent to two layers each providing a total minimum thickness of 3.0 mm on the pipe body and 2.5 mm on the weld.

The Contractor shall propose only those cold applied tape coating systems that have been previously used in pipelines of size 16" and above and a length of 50 km and above in a single project for similar operating conditions.

3.3 **Functional Requirements of Field Joint Coating**

3.3.1 Properties of the PE backing and the as applied joint corrosion coating shall be as follows :

Sl. No.	Property	Unit	Requirement	Test Method
i)	Tensile Strength @+25°C	N/mm^2	≥12	DIN EN 12068
ii)	Ultimate Elongation % @+ 25°C	%	≥250	DIN EN 12068
iii)	Dielectric withstand KV with 1000 Volts/sec	kv	≥30	ASTM D 149
iv)	Water absorption @+ 25°C for 24 hours	%	≤0.05	ASTM D 570
v)	Volume Resistivity @+25°C	Ohm-cm	$\geq 10^{15}$	ASTM D 257
vi)	Resistance to thermal aging at 100°C	%	Change in elongation ≤ 250	DIN 30672

3.3.2 **Functional Properties of Joint Coating System (As applied)**

As applied field joint coating system shall comply the requirements of DIN EN 12068. Table 1 and 2 corresponding to designation DIN EN 12068 – C HT 60 UV, except as modified below :

a) Cathodic Disbondment Resistance at T_{max} i.e. 60°Cshall be 20mm when tested as per Annexure K of DIN EN 12068. Test shall be carried out at (+) 60°C.

b) Peel Strength shall be as follows :

Peel Strength		Unit	Requirement for Mech Resistance Class C (Minimum)	Test Method as per DIN EN 12068
Inner to Inner + Outer to Inner	@23°C	N/mm	1.5	Annexure-B
	@T_{max}	N/mm	0.3	
Outer to Outer	@23°C	N/mm	1.5	
	@T_{max}	N/mm	0.3	
To Pipe Surface	@23°C	N/mm	3.5	Annexure-C
	@T_{max}	N/mm	0.3	
To Factory Coating	@23°C	N/mm	3.5	
	@T_{max}	N/mm	0.3	

Notes

(T_{max} shall be (+) 60°C)

Contractor shall obtain prior approval from Company regarding the manufacturer of the joint coating material. Complete technical details alongwith test certificates complying with the requirements of clause 3.2.1 and 3.2.2 shall be submitted to Company for this purpose. The Contractor shall furnish test certificates from an independent DIN recognized / approved laboratory for all the properties required for the specified EN designation of field joint coating and the requirements of this specification.

3.3 The materials shall not be older than their period of validity at the time of application by CONTRACTOR. Deteriorated/ decomposed material shall be disposed of and replaced by CONTRACTOR at his own expense.

CONTRACTOR shall ensure that the coating materials supplied by him are properly packed and clearly marked with the following :

- Manufacturer's name
- Material qualification
- Batch number
- Date of manufacturing and date of expiry.

3.4 CONTRACTOR shall ensure that the manufacturer has carried out all quality control tests on each batch and manufacturer shall provide test certificates to certify that the supplied materials meet the manufacturer's specifications as indicated in the purchase order and as approved by COMPANY. Certificates and data sheets certifying the qualities of the coating materials shall be submitted by CONTRACTOR to COMPANY prior to application. COMPANY reserves the right to have the materials tested by an independent laboratory.

3.5 Materials shall be stored in sheltered storage in the manufacturer's original packing and away from direct sunlight and in accordance with manufacturer's instructions.

3.6 CONTRACTOR shall provide and maintain mobile facilities which contains all necessary equipment and its spares for cleaning, coating repairs, inspection and tests.

3.7 CONTRACTOR shall furnish sufficient number of the following equipment and the required spares as a minimum for inspection and test purpose for each crew.

a) Fully automatic full circle adjustable holiday detector with a visible and audible signal system for inspection of coatings.
b) Thickness gauge for measuring thickness.
c) Contact type temperature recording thermometer (Digital Pyrometer with flat probe type contact).
d) Roughness profile measuring (Stylus) instrument

4.0 APPLICATION PROCEDURE

4.1 General

4.1.1 The application procedure shall be in accordance with manufacturer's instruction and the minimum requirements specified below whichever are the most stringent and shall be demonstrated to and approved by the Company. Manufacturer's expert shall supervise the application and shall be available at site upon request during qualification of application procedure and during construction at Contractor's cost.

4.1.2 Operators for coating application shall be given necessary instructions and training before start of work, by the Contractor. To verify and qualify the application procedures, all coating applied during the qualification test, shall be removed for destructive testing until the requirements stated in sections "Inspection" and "Testing" of this specification are met.

4.1.3 Oil, grease and salt shall be removed from steel surface by wiping with rags soaked with suitable solvents such as naphtha or benzene. Kerosene shall not be used for this purpose. Solvent cleaning procedure according to SSPC-SP1 shall be followed.

4.1.4 Each field joint shall be blast cleaned using a closed cycle blasting unit or an open expendable blasting equipment. With the first equipment type, steel or chilled shot and iron grit shall be used and Garnet material with the second one (in case the authority having jurisdiction have no objection, the contractor may adopt sand blasting instead of garnet material). During blast cleaning the pipe surface temperature shall be simultaneously more than 5° and more than 3°C above ambient Dew Point, while the ambient Relative Humidity shall not be greater than 85%. Prior to surface cleaning the surface shall be completely dry. The surface shall be cleaned to a grade Sa 2½ in accordance with Swedish Standard SIS-055900 with a roughness profile of 50-70 microns. Surface roughness profile shall be measured using an approved profile comparator in accordance with ISO 8503-1 and shall be calibrated prior to the start of the work in accordance with ISO:8503-3 or ISO:8503-4. The blast cleanliness shall be checked on every joint and the roughness profile shall be checked 1 every 10 joints.

Dust grit or foreign matter shall be removed from the cleaned surface by an industrial vacuum cleaner. The dust contamination allowed shall be of a rating max 2 as per ISO:8502-3. The frequency of checking for dust contamination shall be 1 every 10 joints.

Blast cleaned field joint shall be coated within 2-4 hours according to the conditions below :

- Relative Humidity (RH) > 80% - 2 Hours
- Relative Humidity (RH) 70-80% - 3 Hours
- Relative Humidity (RH) < 70% - 4 Hours

Pipes delayed beyond this point or pipes showing any visible rust stain shall be blast cleaned again.

4.1.5 The field joint surface shall be inspected immediately after blast cleaning and any feature of the steel surface such as weld spatter, scabs, laminations or other imperfections considered injurious to the coating integrity made visible during blast cleaning shall be reported to the Company Representative and on permission from Company Representative, such defects shall be removed by filing or grinding. Pipes affected in this manner shall be then re-blast cleaned if the defective area is larger than 50 mm in diameter.

4.1.6 The ends of existing pipe protective coating shall be inspected and chamfered. Unbounded portions of the coating shall be removed and then suitably trimmed. Portions where parent coating is removed shall be thoroughly cleaned as specified. The adjacent chamfered areas of the line pipe coating shall be cleaned and abraded, to expose a clean uniform fresh surface of uncontaminated factory applied coating.

4.1.7 All steel joint surfaces shall be thoroughly examined before the application of the coating in order to ensure the surface are free of soil, grease, rust, mud, earth or any other foreign matter. All these substances shall be removed before coating, to the procedures herein described.

4.1.8 Protection coating shall be applied on the joints immediately after the completion of cleaning operation.

4.2 **Application of Heat Shrink Wraparound Sleeves**

In addition to the general requirements stated above, following shall be taken into account :

4.2.1 The wrap around sleeves shall be of a size such that a minimum overlap of 50mm is ensured (after shrinking) on both sides of yard applied corrosion coating of the pipes.

In cases where carrier pipe is installed by direct boring/jacking, the overlap on the mill coating for the leading edges of the joints shall be minimum 200mm. When this extra overlap is achieved by providing an additional patch of heat shrink tape/wraparound, it shall be applied in such a manner that the square edge of the patch on the joint coating is in the direction opposite to the direction of boring/jacking.

4.2.2 Before centering the wraparound sleeve, the bare steel surface shall be preheated with torch moved back and forth over the surface or by induction heating. The minimum preheat temperature shall be as recommended by manufacturer and shall be checked by means of contact type temperature recording thermometer (Digital Pyrometer with flat probe type contract) to check this, approved temperature indicates shall be used. Temperature indicating crayons shall not be used. Pre-heat temperature shall be checked on every joint. Care shall be taken to ensure that the entire circumference of the pipe is heated evenly. Temperature measuring instruments shall be calibrated immediately before the start of the works and thereafter at intervals recommended by the manufacturer of the instrument.

4.2.3 Upon pre-heating the pipe surface shall be applied with two pack epoxy primer of wet film thickness 150 microns or as per manufacturer's recommendation whichever is higher, to cover the exposed bare metal of the welded field joint and 10mm min. onto the adjacent pipe coating if recommended by the manufacturer. The wet film thickness of the primer shall be checked or every joint with a wet film thickness gauge prior to installation of sleeve. Thickness gauge shall be calibrated once per shift.

4.2.4 Immediately after application of epoxy primer, the wraparound sleeve shall be entirely wrapped around the pipe within the stipulated time recommended by the manufacturer. Sleeve shall be positioned such that the closure patch is located to one side of the pipe in 10 or 2 O'clock position, with the edge of the undergoing layer facing upward and an overlap of min. 50mm. Gently heat by appropriate torch the backing and the adhesive of the closure and press it firmly into place.

4.2.5 A heat shrinking procedure shall be applied to shrink the sleeve in such a manner to start shrinkage of the sleeve beginning from the center of the sleeve and heat circumferentially around the pipe. Continue heating from the center towards one end of the sleeve until recovery is completed. In a similar manner, heat and shrink the remaining side. Shrinking has been completed when the adhesive begins to ooze at the sleeve edges all around the circumference.

The complete shrinking of the entire sleeve shall be obtained without undue heating of existing pipe coating and providing due bonding between pipe, sleeve and pipe coating. The installed sleeve shall not be disturbed until the adhesive has solidified.

The coatings mentioned are for undergrounds installations.

For HDD Joint Coating fiber glass reinforced heat shrinkable sleeve certified to Stress class C60 type CANUSA-TBK or COVALENCE / DIRAX shall be used. Directional drilling kit, multilayer sleeve system or equivalent to be approved by Owner / Engineer.

Only coating material C-60 Class as per EN 12068 and DVGW certified (wrapping tape and heat shrinkable material) will be accepted for all material to be coated.

For the buried valve station (moulded piece, valves, elbows etc) Thermoset plastic coatings may be used. They will be of type S50 certified as per DIN 30671 & DIN 30677.

Underground bare valves if any will be coated with above material.

At the point of transition from the aboveground pipe to underground pipe special coating material FIBAROLL or equivalent to be used over the coated part of U.G. pipe and painted part of A.G. Pipe end over lapping shall be at least 500 mm inside the ground and 500 mm on painted AG line. Minimum thickness shall be 1.5 mm. The application of the material will be as per supplier's specification.

Wherever Thrust Boring (Jacking) method is carried out, for mechanical protection of coating of carrier pipe extra layer of hard cold applied tapes C-70 class as per DIN 30675-1 or solvent free PUR (1000 microns) as per DIN 3067712 Ep-50 types shall be applied. Surface preparation (sand blasting) of PE layer shall be appropriate as per applicator's recommendations. The type & thickness of coating must got approved by Owner / Engineer prior to coating.

4.3 Application of Cold Applied Tapes

In addition to general requirements stated above following shall be taken care of:-

4.3.1 Cold applied joint protection tapes shall be of the type which can be applied by spirally wrapping on the pipe.

4.3.2 Immediately after the completion of surface preparation the approved primer of wet film thickness 150 microns or as per manufacturer’s recommendation whichever is higher to cover the exposed bare metal of the welded field joint and 10mm min. onto the adjacent pipe coating if recommended by the manufacturer. Any dirt on the primed surface shall be removed. If the primer is damaged, the damaged area shall be cleaned and re-primed.

4.3.3 Approximately 100mm of tape interleaving paper shall be peeled back and tape shall be applied with the adhesive side to the pipe. Whilst continuously removing the interleaving paper, the tape shall be spirally applied to provide a minimum of 55% overlap. Sufficient tension shall be applied to ensure good conformity, avoiding air pockets and also continuously smooth out as the wrapping proceeds. The wrapping shall start and finish to give a minimum of 50mm overlap on to the adjoining yard applied coating. Outer wrap shall also be applied in similar method.

In the cases where carrier pipe is installed by direct boring/jacking, the overlap on the mill coating for the leading edges of the joints shall be minimum 200mm. The direction of spiral wrapping in these cases shall be such that the square edge of the wrapping with the joint coating is in the direction opposite to the direction of boring/jacking.

4.4 **Pre-Qualification of Field Joint Coating System**

The field joint coating system materials and the procedures proposed by the Contractor shall be pre-qualified during the sleeve installation start-up phase. Five joints (5) shall be coated with the requirements of this specification and then inspected and tested in accordance with the requirements of this specification with respect to the following :

i) Surface preparation cleanliness, roughness profile and dust contamination
ii) Pre-heat temperature (as applicable)
iii) Primer thickness
iv) As applied coating thickness
v) Holiday detection
vi) Peel test at (+) 23°C & (+) 60°C on pipe surface & factory applied coating and at over laps (as applicable). If required to achieve the temperature of (+) 60°C, suitable thermal blanket may be used.
vii) Visual appearance and void after installation on the body, area adjoining the weld and area adjoining the factory applied coating. (To establish voids adjoining the weld and factory coating a strip of 50 mm wide and 200 mm long shall be stripped and examined).

Company Representative shall witness the tests and inspection. Regular application of field joint coating shall commence only upon successful completion of the pre-qualification testing.

After successful completion of the pre-qualification testing as above, the entire field joint coating shall be removed, the pipe surface re-blasted and field joint coating re-applied as per the requirements of this specification.

5.0 **INSPECTION**

5.1 A visual inspection shall be carried out for the following :

- Mastic extrusion on either ends of the sleeve shall be examined. (applicable for heat shrink wraparounds).
- There shall be no sign of punctures or pinholes or bend failure. The external appearance of the sleeve shall be smooth, free of dimples, air entrapment or void formation.
- Weld bead profile shall be visible through the sleeve.
- The entire closure patch shall have changed colour uniformly (applicable for heat shrink wraparounds).

5.2 **Holiday Inspection**

The holiday detector used shall be checked and calibrated daily with an accurate DC voltmeter. The detector electrode shall be in direct contact with the surface of coating to be inspected.

The entire surface of the joint section shall be inspected by means of a full circle holiday detector approved by Company set to a DC voltage of at least 25 kV. Inspection of the sleeves shall be conducted only after the joint has cooled below 50°C. (applicable for heat shrink wraparounds).

5.3 No field joint shall be covered or lowered in the trench until it has been approved by the Company.

5.4 **As-applied Coating Thickness**

Coating thickness shall be checked by non-destructed methods for each field joint. Average thickness of the as-applied coating on pipe body shall be established based on measurement at min. eight locations i.e. four measurement on either sides of the girth weld at 3, 6, 9, & 12 O'clock positions. To establish the minimum thickness on the girth weld, four measurement shall be taken on apex on the weld at 3, 6, 9 & 12 O'clock positions. All such measurements shall be recorded. Company Representative reserves the right to ask for additional measurement at any location on the field joint coating, whenever doubt arises.

6.0 **TESTING**

6.1 Company reserves the right to remove and test one out of every 50 joint coatings or one joint coating out of every day's production whichever is stringent. Contractor shall provide all assistance in removing and testing of field joint coatings.

6.2 From each test sleeve, one or more strips of size 25mm x 200 shall be cut perpendicular to the pipe axis and slowly peeled off.

The required peel strength shall meet the requirements of clause 3.2.4.2 (ii) as applicable for 23°C or 60°C whichever is feasible. This test shall be conducted between wrapping & metal and mill coating & between layers at overlap with joint coating (wherever applicable). After removal of strip the bulk of adhesive shall remain adhered to the pipe showing on bare metal, otherwise, test shall be considered failed. The adhesive layer that remains on the pipe surface shall generally be free of voids resulting from air or gas inclusion. In case the peel strength test at a different temperature than that specified in warranted due to the ambient site conditions, then the peel strength shall comply the recommendation of the manufacturer. Manufacturer

shall be asked to furnish peel strength values corresponding to various expected temperatures, prior to start of the works.

6.3 If the sleeve taken away for test does not meet the requirements of clause 6.2 the adjacent two sleeves shall also be removed and inspected.

If the adjacent two sleeves are acceptable the test rate shall be increased to one sleeve in every twenty five until Company's Representative is satisfied. The test rate can then be reduced as per clause 6.1.

If either or both of the adjacent two sleeves do not meet the requirements of clause 6.2, the field coating shall be stopped. (Refer clause 7.0).

6.4 Company Representative reserve the right of 100% removal of sleeves if he is not convinced that the requirements of clause 6.2 are achieved.

6.5 Coating thickness shall be checked by non-destructive methods for each fields joints.

7.0 **REPAIRS**

7.1 If a field joint is detected to be unacceptable after testing as per section 6.0 of this specification the Contractor shall, at his own cost :

- determine the cause of the faulty results of the field coating.
- mobilise the expert of manufacturer, if required.
- test to the complete satisfaction of the Company, already completed field coatings.
- stop field coating until remedial measures are taken against the causes of such faults, to the entire satisfaction of the Company.

7.2 Contractor shall replace all joint coating found or expected to be unacceptable a per section 6.0 of this specification.

7.3 Contractor shall, at his own cost repair all areas where the coating has been removed for testing by the Company.

7.4 After the coating work on welded joints, fittings and repairs to the coating have been completed the coating as a whole shall be tested with a spark-tester before lowering or jacking the pipeline.

7.5 Company shall be entitled to check the coating on buried pipelines or parts of pipelines with equipment such as the "Pearson Meter" and the resistance meter. If Coating defects are establish, the Contractor shall be responsible for excavations at such points, repairing the coating, spark testing and backfilling the excavation without extra charge.

8.0 DOCUMENTATION

8.1 Prior to procurement of coating materials, Contractor shall furnish the following information for qualification of the Manufacturer and material :

i. Complete descriptive technical catalogs describing the materials offered along with samples of corrosion coating materials, its properties and application instruction as applicable specifically to the project.

ii. Test certificates and results of previously conducted tests, for all properties listed in clause 3.2.4 of this specification.

iii. Reference list of previous supplies, in last 5 years, of the similar material indicating the project details such as diameter, quantity, operating temperature, years of supply, project name, contact person and feed back on performance.

Once the Company's approval has been given, any change in material or Manufacturer shall be notified to Company, whose approval in writing of all changes shall be obtained before the materials are manufactured.

8.2 Prior to shipment of materials from the Manufacturer's Works Contractor shall furnish the following documents :

i. Test certificates/ results as per Manufacturer's Quality Control Procedure for each batch of materials.
ii. Specific application instructions with pictorial illustrations.
iii. Specific storage and handling instructions.

8.3 All documents shall be in English Language only.

Rev. : 0
Edition : 1

SPECIFICATION
FOR
VENTS, DRAINS AND WELLS

SPECIFICATION NO.: MEC/S/05/21/15

(OIL & GAS SBU)
MECON LIMITED
DELHI 110 092

MECON LIMITED REGD. OFF: RANCHI 834002	STANDARD TECHNICAL SPECIFICATION OIL & GAS SBU, DELHI		
TITLE	VENTS, DRAINS AND WELLS	DOCUMENT NO. MEC/S/05/21/15	Page 1 of 1 REVISION : 0 EDITION : 1

CONTENTS

SL. NO.	DESCRIPTION OF DRAWING	DRAWING NO.
1.	Vent & Drain for Line 2" & above	MEC/SD/05/21/15/01
2.	Wells Installation 1½ Dia Taps	MEC/SD/05/21/15/02 (Sheet 1 of 2)
3.	Wells Installation 1½ Dia Taps	MEC/SD/05/21/15/02 (Sheet 2 of 2)
4.	Vent & Drain for lines 1½" & below	MEC/SD/05/21/15/03
5.	Pressure Tapping	MEC/SD/05/21/15/05

PREPARED BY:	CHECKED BY:	APPROVED BY:	ISSUE DATE :
(Binita Brahma)	(Sunil Kumar)	(A.K. Johri)	Feb. 2009

TYPE	VENT	DRAIN

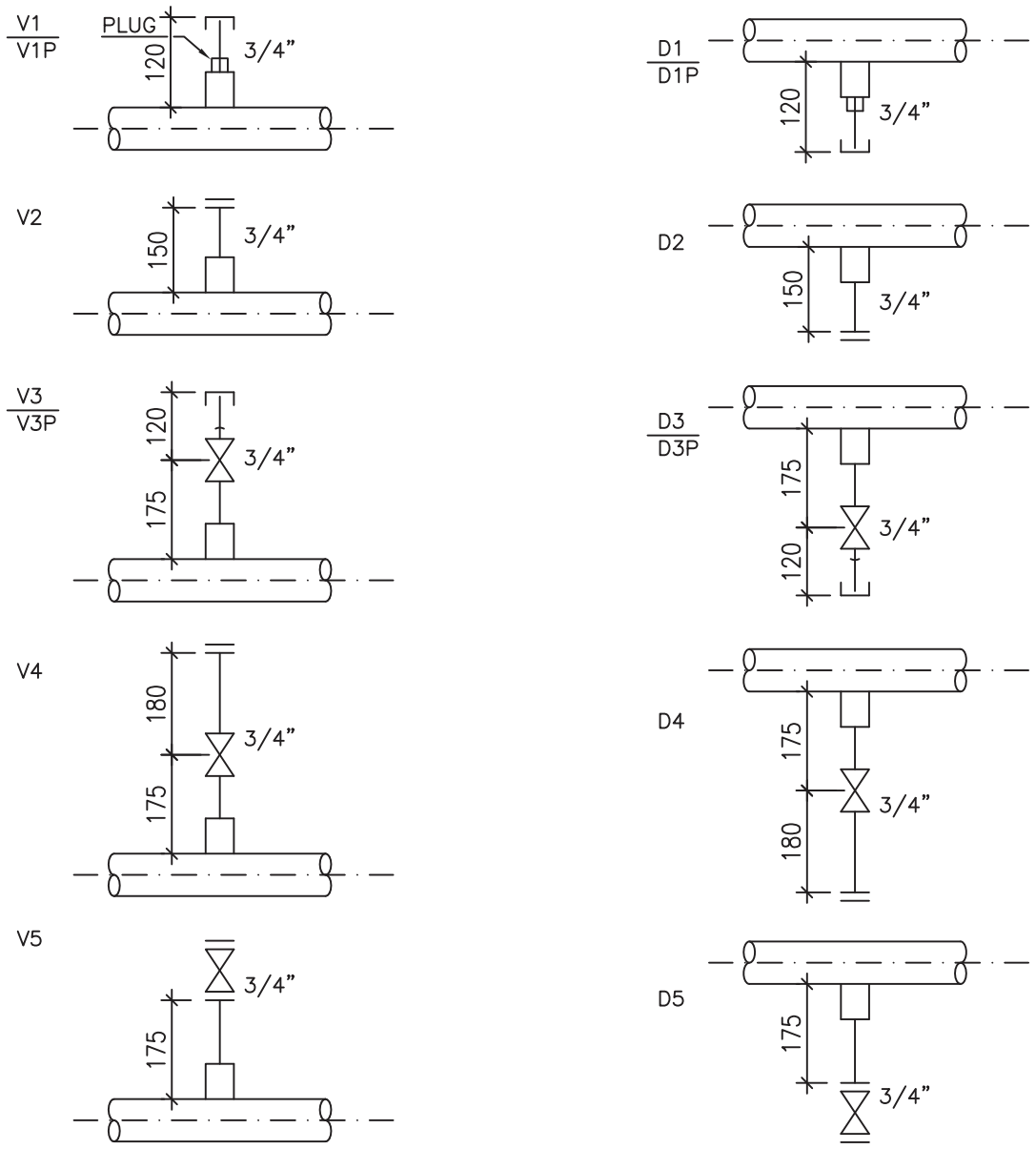

NOTES:–

1. DIMENSIONS ARE VALID FOR 75mm (MAX.) THICKNESS INSULATION FOR HIGHER INSULATION THICKNES INCASE DIMENSIONS AS REQUIRED.
2. VENTS & DRAINS SHALL BE PROVIDED WITH GATE, GLOBE OR PLUG VALVE WITH HALF COUPLING OR STUB IN WITH CAP OR FLANGE, BLIND FLANGE, AS PER PIPING SPECIFICATIONS.
3. VENTS/DRAINS CAN BE PROVIDED ON FLAT SIDE OF ECCENTRIC REDUCERS ON SIZES 4" & ABOVE.
4. LEGEND V=VENT, D=DRAIN, C=CAP, F=FLANGE, P=PLUG
5. PLUGGED END OF VALVE OR FITTING SHALL BE THREADED.

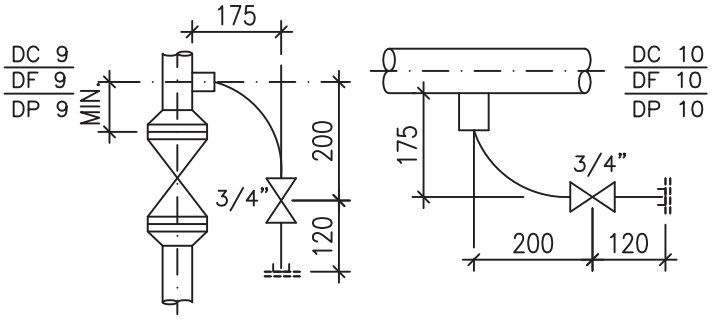

REV NO	DATE	ZONE	DESCRIPTIONS	BY	APPRD	REFERENCES	DRG. NO.

REVISIONS

SECTION: P&PD	NAME	DATE	CHKD	DATE
DSGN				
DRWN				
APPROVED				

VENT & DRAIN FOR LINES 2" & ABOVE

MECON LIMITED

SCALE : N.T.S.

DRG.NO MEC/SD/05/21/15/01

REV 0

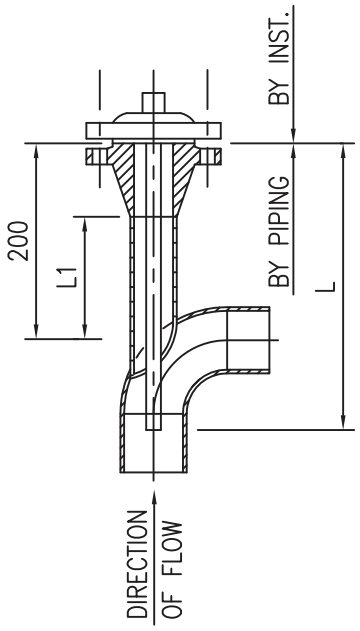

TYPE TW-1

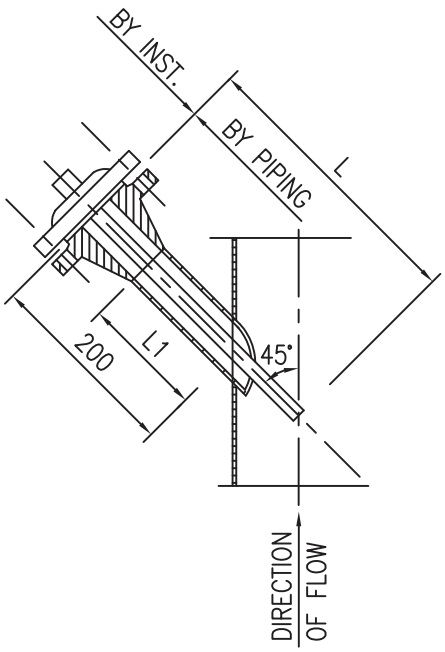

TYPE TW-2

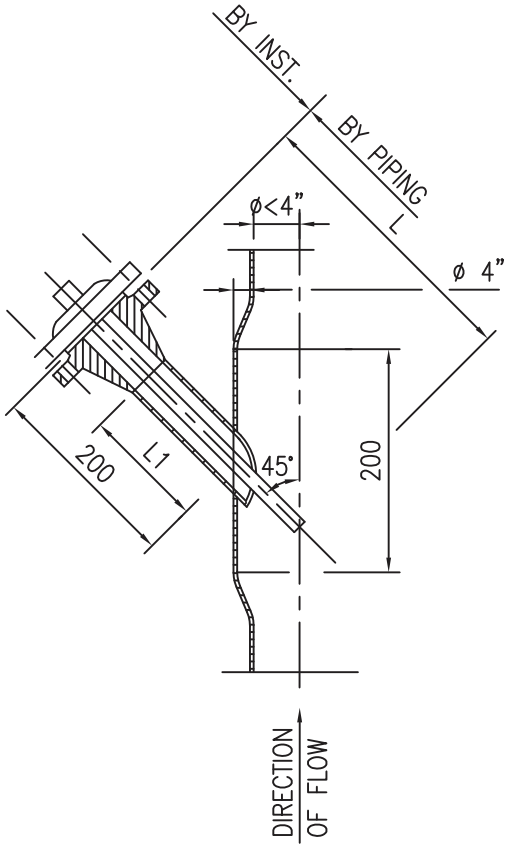

TYPE TW-4

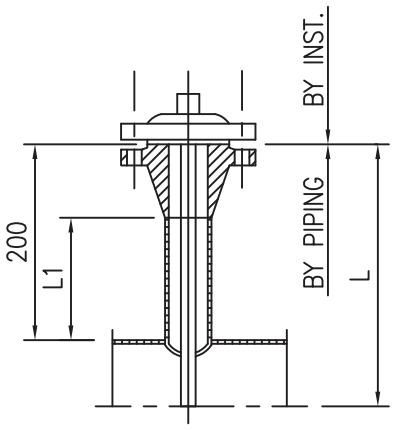

TYPE TW-3

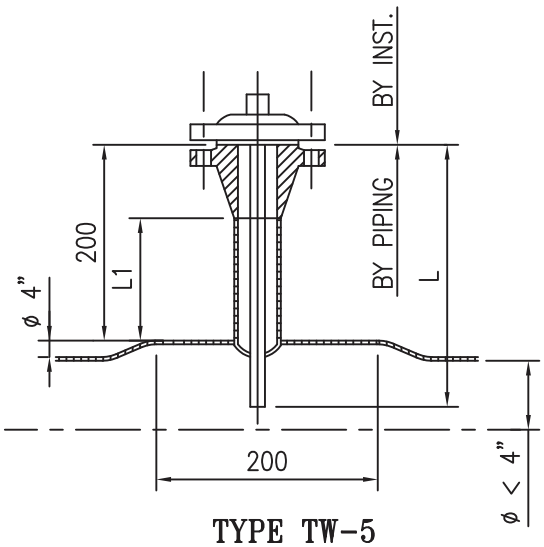

TYPE TW-5

LINE DIA	L 1.5" FLANGED WELL
4"	200
6"	300
8"	300
10"	300
12"	300
14"	300
16"	400
18"	400
20" & LARGER	500
VESSELS	AS REQUIRED

1. ELBOW MIN. 4" ø OR LARGER
2. VERTICAL LINE 4" ø OR LARGER
3. HORIZONTAL LINE 4" ø OR LARGER
4. VERTICAL LINE DIA LESS THAN 4"
5. HORIZONTAL LINE DIA LESS THAN 4"

NOTES:

1. BOLTS, NUTS AND GASCKETS BY PIPING.
2. MIN. CLEARANCE FOR REMOVAL L+550
3. L1 DIMENSIONS ARE CALCULATED FOR WN, RF FLG. ONLY.
4. IN CASE ANY DEVIATION IS REQUIRED FOR INSTALATION TAPS FROM THIS STD. INST. DEPTT. TO BE CONSULTED.

REV NO	DATE	ZONE	DESCRIPTIONS	BY	APPRD		
REVISIONS						REFERENCES	DRG. NO.

SECTION: P&PD				
	NAME	DATE	CHKD	DATE
DSGN				
DRWN				
APPROVED				

WELLS INSTALLATION
1½" DIA TAPS

MECON LIMITED

SCALE : N.T.S.

DRG.NO MEC/SD/05/21/15/02 (SH. 1 OF 2)

REV 0

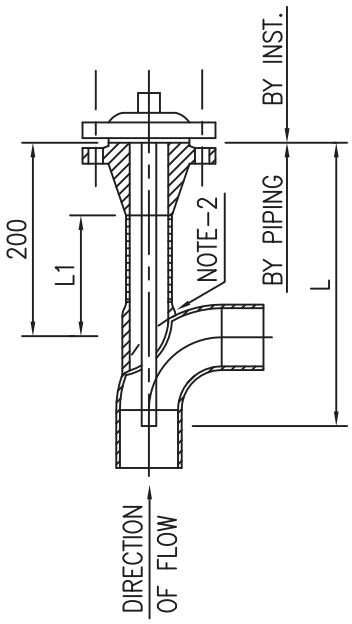

TYPE TW-6

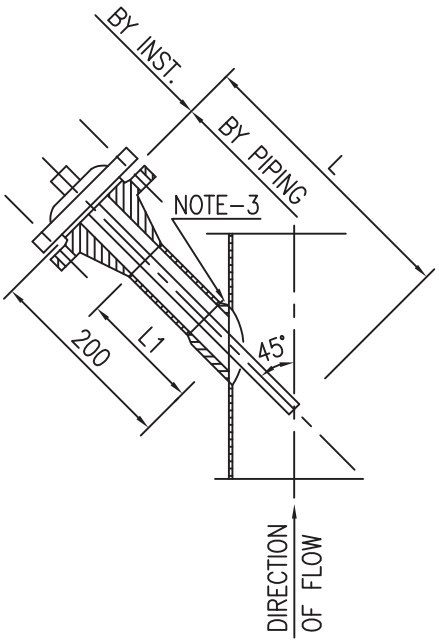

TYPE TW-7

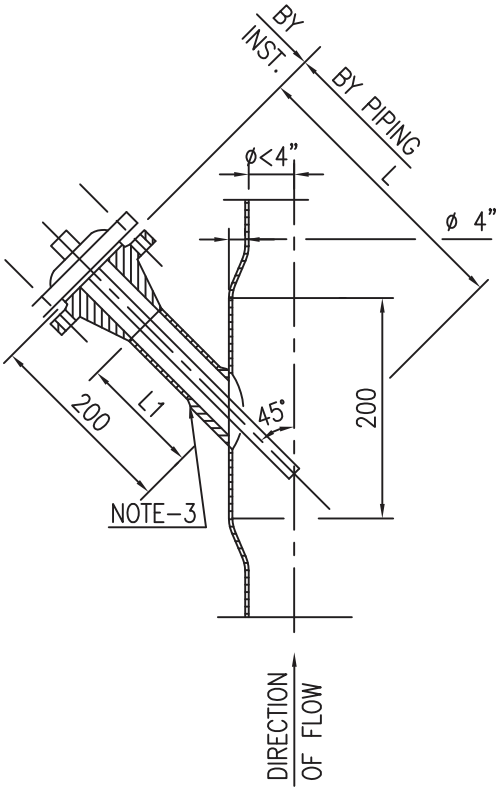

TYPE TW-9

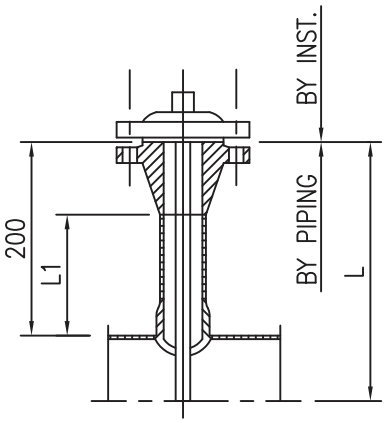

TYPE TW-8

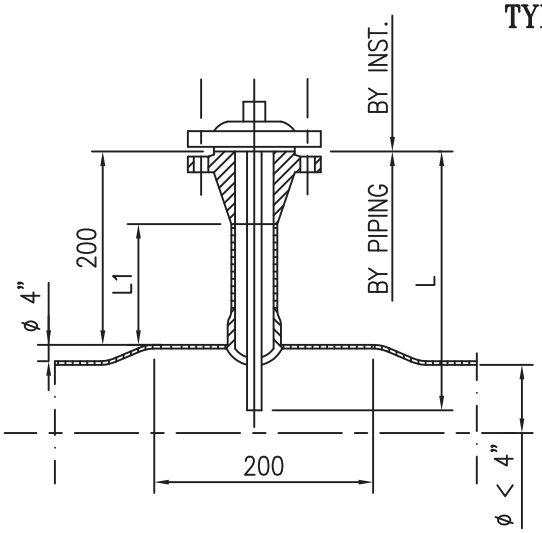

TYPE TW-10

LINE DIA	L 1.5" FLANGED WELD
4"	200
6"	300
8"	300
10"	300
12"	300
14"	300
16"	400
18"	400
20" & LARGER	500
VESSELS	AS REQUIRED

6. ELBOW MIN. 4" ø OR LARGER
7. VERTICAL LINE 4" ø OR LARGER
8. HORIZONTAL LINE 4" ø OR LARGER
9. VERTICAL LINE DIA LESS THAN 4"
10. HORIZONTAL LINE DIA LESS THAN 4"

NOTES:

1. BOLTS, NUTS AND GASCKETS BY PIPING.
2. MIN. CLEARANCE FOR REMOVAL L+350.
3. COUPLING TO BE SPECIAL LENGTH.

REV NO	DATE	ZONE	DESCRIPTIONS	BY	APPRD	REFERENCES	DRG. NO.
			REVISIONS				

SECTION: P&PD

	NAME	DATE	CHKD	DATE
DSGN				
DRWN				

APPROVED

WELLS INSTALLATION
1 1/2" DIA TAPS

MECON LIMITED

SCALE : N.T.S.

DRG.NO MEC/SD/05/21/15/02 (SH. 2 OF 2)

REV 0

VC 2
VF 2
VP 2

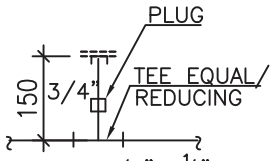

VENT ON LINE 3/4"–1½"

VC 2
VF 2
VP 2

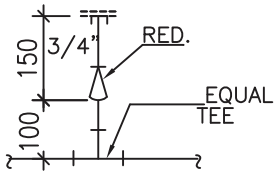

VENT ON LINE 1"–1½"

VC 3
VF 3
VP 3

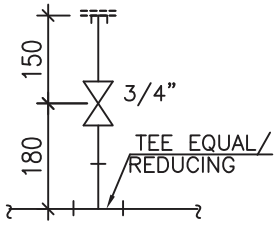

VENT ON LINE 3/4"–1½"

VC 4
VF 4
VP 4

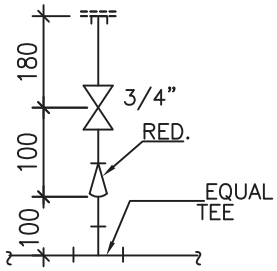

VENT ON LINE 1"–1½"

VC 5
VF 5

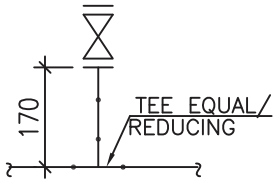

VENT ON LINE 3/4"–1½"

VC 6
VF 6

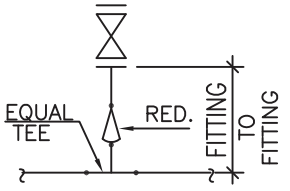

VENT ON LINE 1"–1½"

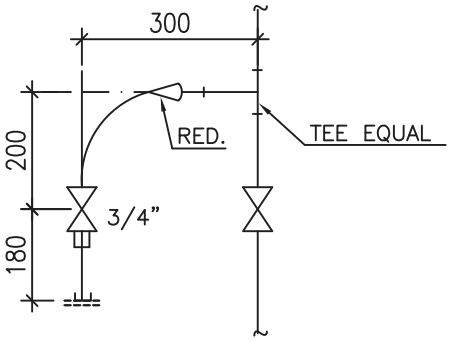

DRAIN ON LINE 1"–1½"

DC 7
DF 7
DP 7

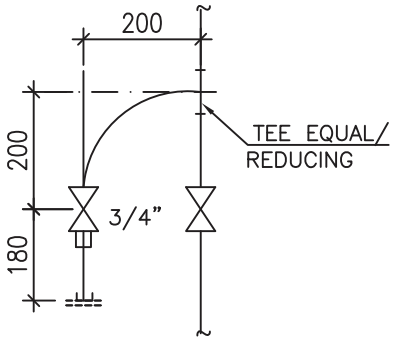

DRAIN ON LINE 3/4"–1½"

DC 8
DF 8
DP 8

DC 2
DF 2
DP 2

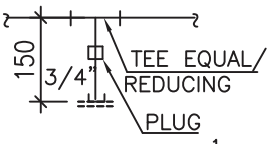

DRAIN ON LINE 3/4"–1½"

DC 2
DF 2
DP 2

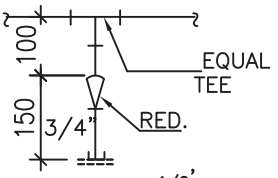

DRAIN ON LINE 1'–1$^{1/2}$'

DC 3
DF 3
DP 3

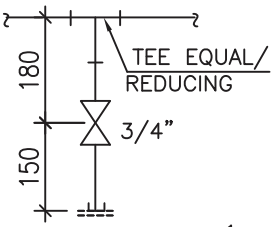

DRAIN ON LINE 3/4"–1½"

DC 4
DF 4
DP 4

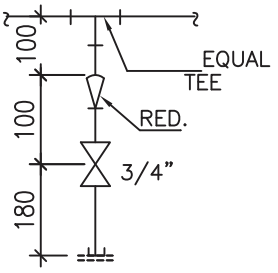

DRAIN ON LINE 1"–1½"

DC 5
DF 5

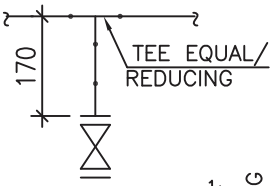

DRAIN ON LINE 3/4"–1½"

DC 6
DF 6

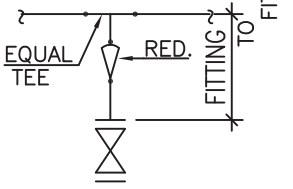

DRAIN ON LINE 1"–1½"

NOTES:–

1. DIMENSIONS ARE VALID FOR 50mm (MAX.) THICKNESS INSULATION. FOR HIGHER INSULATION THICKNES INCASE DIMENSIONS AS REQUIRED.
2. VENTS & DRAINS SHALL BE PROVIDED WITH GATE, GLOBE OR PLUG VALVE
3. LEGEND V=VENT, D=DRAIN, C=CAP, F=FLANGE, R=REDUCER, COUPLING OR SWAGE, P=PLUG
4. PLUGGED END OF VALVE OR FITTING SHALL BE THREADED.

REV NO	DATE	ZONE	DESCRIPTIONS	BY	APPRD
REVISIONS				REFERENCES	DRG. NO.

SECTION: P&PD

	NAME	DATE	CHKD	DATE
DSGN				
DRWN				

APPROVED

VENT & DRAIN ON LINES 1½" & BELOW

MECON LIMITED

SCALE : N.T.S.

DRG.NO MEC/SD/05/21/15/03

REV 0

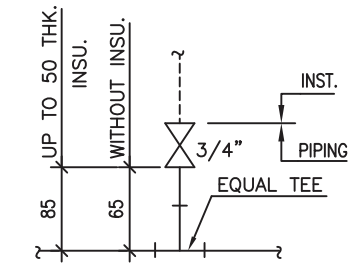

PC-1 ON LINE 3/4"

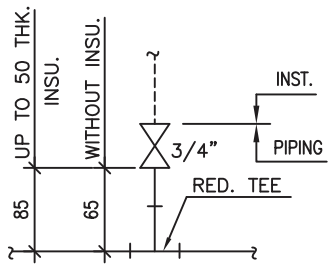

PC-2 ON LINE 1"-1 1/2"

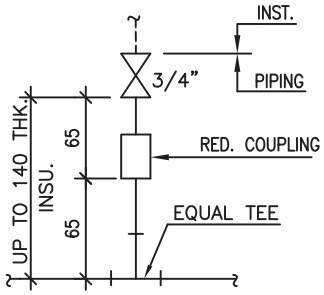

PC-3 ON LINE 1"-1 1/2"

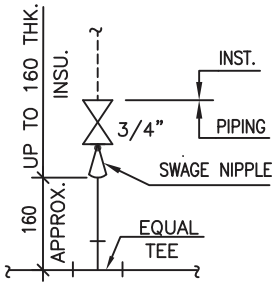

PC-4 ON LINE 1"-1 1/2"

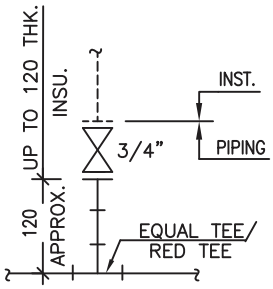

PC-5 ON LINE 3/4"-1 1/2"

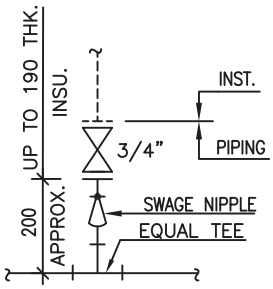

PC-6 ON LINE 1"-1 1/2"

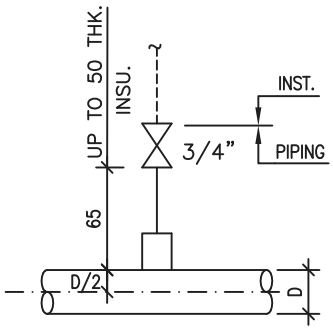

PC-10 ON LINE 2" & ABOVE

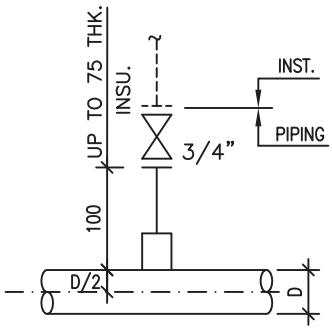

PC-11 ON LINE 2" & ABOVE

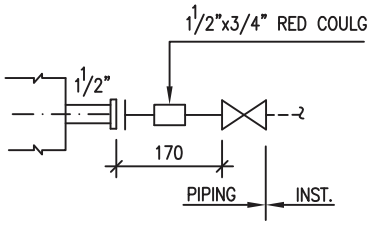

PC-12

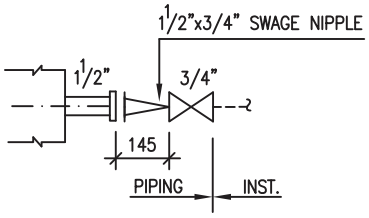

PC-13

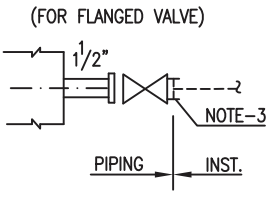

PC-14

PC-15 WITH 2" VALVE

ON VESSELS/ COLUMNS

NOTES:-

1. THE INDICATED DIMENSIONS ARE IN MINIMUM WHICH ALSO COVER INSULATION TO THE EXTENT SHOWN ABOVE. IN HIGHER THICKNESS OF INSULATION THAN INDICATED, THE DIFFERENCE SHALL BE ADDED IN THE DIMENSIONS SHOWN ABOVE ACCORDINGLY.
2. PRESSURE TAPPING SHALL BE PROVIDED WITH GATE, GLOBE OR PLUG VALVE WITH TEE, HALF COUPLING OR STUB-IN, AS PER PIPING SPECIFICATION.
3. IN CASE OF FLGD. VALVES BOLTING & GASKET ON BOTH SIDES OF VALVE SHALL BE IN PIPING SCOPE.
4. IN CASE OF TAPPINGS PROVIDED OTHER THAN INDICATED IN THIS STD FOR LAYOUT REASONS DETAILED DIMENSIONS WILL BE CALLED OUT.

REV NO	DATE	ZONE	DESCRIPTIONS	BY	APPRD	REFERENCES	DRG. NO.
			REVISIONS				

SECTION: P&PD

	NAME	DATE	CHKD	DATE
DSGN				
DRWN				

APPROVED

PRESSURE TAPPING

MECON LIMITED

SCALE : N.T.S.

DRG.NO MEC/ SD/05/21/15/05

REV 0

Rev. : 0
Edition : 1

STANDARD SPECIFICATION

FOR

BLASTING

SPECIFICATION NO.: MEC/S/05/21/18

(OIL & GAS SBU)
MECON LIMITED
DELHI 110 092

MECON LIMITED REGD. OFF: RANCHI 834002	STANDARD TECHNICAL SPECIFICATION OIL & GAS SBU, DELHI		
TITLE	**BLASTING**	DOCUMENT NO. **MEC/S/05/21/18**	Page 1 of 1 REVISION : 0 EDITION : 1

C O N T E N T S

Sl.No.	Description
1.0	SCOPE
2.0	REFERENCE DOCUMENTS
3.0	GENERAL
4.0	MATERIALS
5.0	PERSONNEL
6.0	STORAGE OF EXPLOSIVES
7.0	PREPARATION OF EXPLOSIVES
8.0	PREPARATION OF PRIMERS
9.0	CHARGING OF HOLES
10.0	ELECTRICAL FIRING
11.0	VIBRATION RECORDING
12.0	MISFIRES
13.0	DISPOSAL OF DETERIORATED EXPLOSIVES

PREPARED BY:	CHECKED BY:	APPROVED BY:	ISSUE DATE :
(Shalini Singh)	(Sunil Kumar)	(A.K. Johri)	Jan. 2009

1.0 SCOPE

- This specification covers the minimum requirements for materials, personnel, transportation, storage and use of explosives for grading of Right of Use (RoU) and excavation of trenches for onshore pipeline installation in rocky terrain.

- This specification does not cover the construction or operation of permanent magazines.

2.0 REFERENCE DOCUMENTS

Reference has also been made to the latest edition of the following standards, codes and specifications. The edition enforce at the time of floating the enquiry shall be termed as latest edition.

a) BS-5607 : Safe use of Explosives in the Construction Industry

b) IS4081 : Safety Code for Blasting and Related Drilling Operations

c) NFPA-495 : Manufacture, Transportation, Storage & Usage of Explosive Materials.

d) Safety Rules of Chief Controller of Explosives, Nagpur

3.0 GENERAL

- The Contractor shall acquaint himself and comply with all the applicable local laws and regulations concerning storing, handling and the use of explosives. All such laws, regulations and rules etc., as enforced from time to time shall be binding upon the Contractor. National / Local Laws and Regulations shall take precedence over this specification in the event of conflict. All conflicts shall be brought to the notice of the Company.

- The requirements stated herein however in no way relieve the Contractor of his responsibility of carrying out safe blasting operations. The Contractor shall be solely responsible for damages and claims thereof.

- The use of explosives requires an approval from the Chief Controller of Explosives and/or his authorized Inspector. It shall be the responsibility of the Contractor to obtain all such permits and. approvals and comply all requirements regarding the safe storage, handling and use of explosives. All expenses incurred in this regard shall be to Contractor's account.

- Contractor shall inform the Company in writing at least four (4) weeks prior to planned use of explosives.

- Contractor shall notify the Company prior to any blasting in the proximity of overhead power lines, roads, communication lines, pipelines, utility services or other services and structures above and below ground. Before, starting blasting operations, local authorities and owners of utilities shall be consulted to check on the presence of services, which could be damaged and their approval obtained to undertake blasting operations. The distances to nearest structures (houses, offices, factories) or service shall also be taken into consideration when, planning blasts so that ground vibration and air-over pressure is kept within acceptable levels as given in section 11.0 of this specification

- Contractor shall prepare an Explosives Handling and Usage Procedure for the information of the Company, which shall include the following:

  - Detailed procedure and calculations.
  - Nature of blasting operations, including hole diameter, depth and presence of cavities
  - Rock characteristics
  - Type of explosives
  - Temperature likely to be encountered in use

- Unless specified otherwise, blasting shall not be allowed within 20 m of any above ground or underground structure, pipelines or other facilities. However, in case it is necessary to carry out blasting operation within 20 m from any under ground or above ground structures, pipelines or other facilities, the blasting may be allowed, at discretion of Company, subjected to the following :

  a) Minimum clear distance from the facility is 5 m.

  b) Contractor demonstrates the blasting technique proposed by him doesn't result in any damage to the existing facility. (Contractor shall carry out mock demonstration as per the direction of Company Representative for this purpose).

  c) Contractor fulfills the conditions laid out by the Owner of the existing facilities.

  d) Contractor fulfills the requirements laid-out by National / Local Laws and Regulations and other statutory/regulatory Authorities.

  In case of presence of overhead power lines/cables, specific approvals shall be obtained by Contractor from the concerned Authorities having jurisdiction over it.

4.0 MATERIALS

- All materials such as explosives, detonators; fuses, tamping materials etc. that are proposed to be used by the Contractor in blasting operations, shall be as approved for use in the Country.

- All electric detonators used in the blast shall be of the same electrical sensitivity and be produced / procured from the same manufacturer.

- The detonators used shall be capable of giving effective blasting of the explosives. Damaged explosive materials shall be destroyed by a responsible person as per manufacturer's instructions or returned to the manufacturer.

- No explosive material shall be abandoned.

- All blasting materials and testing equipment shall be regularly tested for correct performance. The intervals between test shall be decided after consideration of the local factors, but tests shall always be carried out if the blasting materials and / or test equipment have been subjected to abnormal conditions, or following any misfires. Guidelines / recommendations of the manufacturer shall be adhered to.

- All packaging and other waste materials gathered together during blasting operation shall be burnt after the blast has been fired. The burning site shall be chosen at a safe distance with due respect to prevailing wind strength and direction, at least 100 meters from explosives stores and other premises. A minimum of two fire extinguishers shall be on hand during burning activities.

5.0 PERSONNEL

- Excavation by blasting will be permitted only under personal supervision of competent and licensed persons and by trained workmen.

- The storage of explosives shall be in the charge of a person approved by the Company. Company may, if necessary, ask police inquiries being made as to his reliability, antecedents etc.

6.0 STORAGE OF EXPLOSIVES

- The Contractor shall build a magazine for storing the explosives. The site of the magazine, its capacity and design shall be subject to approval by the Company and the Inspector of Explosives before the fabrication is taken up. As a rule the explosives should be stored in a clean, dry, well ventilated, bullet proof and fire proof building, at an isolated site. Adequate security shall be provided to ensure no unauthorized entry into the magazine. A notice shall be hung next to magazine entrance prohibiting entry of unauthorized persons.

- Contractor shall comply with National / Local Regulations and specifications for truck mounted mobile explosives store. Mobile stores shall only carry ONE DAY's Explosives requirements and shall be parked overnight inside the compound at the authorized magazine.

- All safety precautions and necessary equipment for maintenance, operation of mobile stores, as required by local authorities or regulatory bodies shall also be installed / provided on the Mobile Store.

- A careful and day-to-day account of all explosives shall be kept by the Contractor in a register and in an approved manner. The register shall be produced by the Contractor, for the inspection of the Company / Inspector of Explosives when so required by the later.

  Any loss, damage or theft shall be reported immediately to the necessary local authorities and to the Company.

- The magazine shall on no account be opened during or on the approach of a thunderstorm and no person shall remain in the vicinity of the magazine during such period.

- Magazine-shoes without nails shall, at all times, be kept in the magazine, and a wood-tub or cement trough, filled with water shall be fixed near the door of the magazine.

- Persons entering the magazine must put on the magazine-shoes and shall comply to following:

  I) not to put their feet on the clean floor unless they have magazine-shoes on.

  II) not to allow the magazine-shoes to touch the ground outside the clean floor.

  III) not to allow any dirt or grit to fall on the clean floor.

- No matches or inflammable material shall be allowed in the magazine. Light shall be obtained from an electric storage battery lamp.

- No person having articles of steel or iron on him shall be allowed to enter the magazine. No tools or implements other than those of copper, brass, gun metal or wood shall be allowed inside the magazine.

  Oily cotton. rags, waste and articles liable to spontaneous ignition, shall not be allowed inside the magazine.

- Boxes of explosives shall not be thrown down or dragged along the floor and shall be stacked on wooden trestles. Open boxes of explosives shall never be exposed to the direct rays of the sun. Empty boxes or loose packing materials shall not be kept inside the magazine.

- The magazine shall have a lightning conductor, which shall be got tested periodically, by an officer authorized by the Company, the testing fee shall be to the Contractor's account.

- The magazine shall be inspected periodically by an officer representing the Company, who will see that all the rules are strictly complied with. He will notify all omissions etc. to the Contractor, who shall rectify the defects within a period of 3 days from the date of receipt of the notice, failing which the Company may take whatever actions it considers suitable.

7.0 PREPARATION OF EXPLOSIVES

- Contractor shall submit the following procedures for INFORMATION of the Company as a minimum.

  - Loading of explosives
  - Drilling of new holes and extending existing holes
  - Handling of explosives at site
  - Tamping explosives into holes,
  - Machines, tools and cables required
  - Initiation of blasting
  - Safety of personnel
  - Vibration control
  - Blast pattern and shot size establishment
  - Misfires
  - Emergency procedures

- Trial blasts in conjunction with vibration recording shall be carried out for each rock and trench type, in order to assess rock breakability and vibration levels. These trial blasts shall be carried out prior to actual trench blasting of the pipeline route. Contractor shall conduct trial digs as directed by Company in order to check suitability of the blasting pattern and to measure vibration levels to ensure vibration levels are below the allowable maximum.

- "Weight per Distance Tables" shall be drawn up from these trials.

- The detonators shall never be forced into the primer cartridge. It shall be inserted in a hole made by a wooden, copper, brass or aluminum pricker. The detonator shall be firmly embedded in the primer so that it is not pulled out of place during loading.

- Detonators shall be activated electrically. In proximity of electric over-head power lines, Contractor may use non-electric system with the approval of Company. Fly rock shall be minimized by the use of approved blast mats and by careful selection of shot size and drill hole configuration.

- Use of explosives is prohibited in areas exposed to flammable gasses or dust.

- Explosive and detonators shall be carried in separate boxes, tightly closed, and transported separately. For the conveyance of primers special containers shall be used.

- Explosives shall be stored and used chronologically to ensure that the ones received earlier are being used first.

- A make-up house shall be provided at each working place in which cartridges shall be made up by experienced men as required. The make-up house shall be separated from other buildings. Only electric storage battery lamps shall be used in this house.

- No smoking shall be allowed in the make-up house.

8.0 PREPARATION OF PRIMERS

The primers shall not be prepared near open flames or fires. The work of preparation of primers shall always be entrusted to the qualified and approved personnel. Primers shall be used as soon as possible after they are ready.

9.0 CHARGING OF HOLES

- The work of charging shall not commence before all the drilling work at the site is completed and the Company has satisfied itself to that effect by actual inspection.

- The lead wires shall be kept away from conductors or sources of stray current. While charging, open lamps/flames shall be kept away.

- Only wooden tamping rods without any kind of metal on them shall be used.

- Only one cartridge shall be inserted at a time and gently inserted to the required depth with the tamping rod. The sand, clay or other tamping material used for filling the hole completely shall not be tamped too hard.

- Blasting shall not take place after sunset or before sunrise unless specific approval is first obtained by Contractor from local authorities and the Company.

- The site of blasting operations shall be prominently demarcated by red danger flags. The order of fire shall be given only by the Supervisor-In-Charge of the work and this order shall be given only after giving the warning signal three times, so as to enable all the labor, watchmen etc. to reach safe shelter and after having ascertained that nobody is within the danger zone.

- A buegle with a distinctive note shall be used to give the warning signals. The buegle shall not be used for any other purpose. All the labor shall be made acquainted with the sound of the buegle and shall be strictly warned to leave their work immediately at the first warning signal and to take safe shelters, and not to leave the shelters until the all clear signals have been given.

- All the roads and footpaths leading to the blasting area shall be watched. All the escape routes shall have been clearly marked.

10.0 ELECTRICAL FIRING

- Only the Supervisor-In-Charge shall keep the key of the firing apparatus and shall keep it always with himself.
- Special apparatus shall be used as source of current for the firing operations. Power lines shall not be tapped for the purpose.
- The firing cable shall have a proper insulating cover so as to avoid short circuiting due to contact with water, metallic parts or rock.
- The use of earth as a return line shall not be permitted.
- The firing cable shall be connected to the source of current only after ascertaining that nobody is in the area of blasting.
- Before firing, the circuit shall be checked by a suitable apparatus.
- After firing, whether with or without an actual blast, the contact between the firing cable and the source of current shall be cut off before any person is allowed to leave the shelter.
- During storms, charging with electrical detonators shall be suspended. The charges already placed into the holes shall be blasted as quickly as possible after taking all the safety precautions and giving necessary warning signals. If this is not possible, the site shall be abandoned till the storm has passed.

11.0 VIBRATION RECORDING

- Contractor shall use Company approved vibration recording system capable of measurement in three axes (tri-axial). The device shall have an accuracy of 0.0025 mm and a resonance of2 Hz.

  - The device shall measure both frequency and amplitude of vibration.

- All the measurement devices shall be calibrated by an APPROVED certification body.
- Particle velocity shall not exceed the following:

  - Areas beyond 500 m of proposed pipeline centreline

- 50 mm/sec at a surface distance of 15 m from trench centerline.

- Areas with existing buried or above ground facilities within 500 m of proposed pipeline centreline.

  - 20 mm/sec at a surface distance from the trench centre line towards the nearest existing facilities.

➢ The particle velocity levels are provided for the guidance only, Contractor shall be responsible and liable for any injury to life or damage to property/facilities.

➢ Air-over pressure/sound levels shall be limited to 100 db in inhabited areas.

12.0 MISFIRES

➢ If it is suspected that part of the blast has failed to fire, or is delayed, sufficient time shall be allowed to lapse before entering the danger zone. When fuse and blasting caps are used, a safe time should be allowed and then the Supervisor alone shall leave the shelter to see the misfire.

➢ Drilling near the hole that has misfired shall not be permitted until one of the two following operations have been carried out by the Supervisor:

I) The Supervisor should very carefully (when the tamping is of damp clay) extract the tamping with a wooden scraper of jet of water or compressed air (using a pipe of soft material) and withdraw the fuse with the primer and detonator attached. A fresh primer and detonator with fuse shall then be placed in this hole and fired.

II) The Supervisor shall get one foot of the tamping cleaned off and indicate the direction by placing a stick in the hole. Another hole may then be drilled at least 9" away and parallel to it, this hole should then be charged and fired. The balance of the cartridges and detonators found in the muck shall be removed.

➢ The Supervisor shall at once report to the office all cases of misfire, the cause of the misfire and the steps taken in connection therewith.

➢ If a misfire has been found to be due to defective detonator, or explosive, the whole quantity from the box from which the defective articles were taken must be returned to the manufacturer for inspection to ascertain whether the whole box contains defective materials.

➢ Re-drilling the holes that have misfired either wholly or partly shall not be permitted.

13.0 DISPOSAL OF DETERIORATED EXPLOSIVES

All deteriorated explosives shall be disposed off in an approved manner. The Contractor shall prepare said disposal plan, which shall be approved by Company / Local Authorities / Controller of explosives. The quantity of the deteriorated explosives to be disposed off shall be intimated to Company prior to its disposal. All the records of such disposal shall be maintained by Contractor.

Rev. : 0
Edition : 1

SPECIFICATION
FOR
GASKETS, BOLTS & NUTS

SPECIFICATION NO.: MEC/S/05/21/19

(OIL & GAS SBU)
MECON LIMITED
DELHI 110 092

CONTENTS

SL.NO.	DESCRIPTION
1.0	GASKETS
2.0	NUTS AND BOLTS

TECHNICAL NOTES FOR GASKETS

1.0 All gaskets shall conform to the codes/standards and specifications given in the requisition. Vendor shall strictly comply with MR / PR stipulations and no deviations shall be permitted.

2.0 Process of manufacture, dimensions and tolerances not specified in requisition shall be in accordance with the requirements of the manufacturer's standards.

3.0 Test reports shall be supplied for all mandatory tests for gaskets as per the standards specified in the requisition.

4.0 Chemical composition and hardness of RTJ gaskets shall also be furnished in the form of test reports on samples.

5.0 For Spiral wound material following shall be furnished:

a. Manufacturer's test certificate for filler material and spiral material as per the relevant material specifications.

b. Manufacturer's test certificate for raw materials and tests for compressibility / seal-ability & recovery as per the relevant material specifications.

6.0 Full face gaskets shall have bolt holes punched out.

7.0 Filler material for spiral wound gaskets shall not have any colour or dye.

8.0 All spiral wound gaskets shall be supplied with Outer ring. Material of the outer ring shall be CS unless other wise specified in the MR.

9.0 For spiral wound gaskets, material of Inner Compression ring shall be same as Spiral Strip material. In addition to the requirements as per code and as specified in the MR, inner rings shall be provided for the following:

a. Sizes 26" and above.

b. Class 900 and above.

10.0 Hardness of metallic RTJ gaskets shall not exceed the values specified below unless otherwise specified in MR :

Ring Gasket Material	**Maximum Hardness (BHN)**
Soft Iron	90
Carbon steel	120
5 Cr. ½ Mo	130
Type 304, 316, 321, 347	140
Type 304L, 316L	120

11.0 Face finish of metallic RTJ gaskets shall be 32 to 63 AARH.

12.0 Gaskets of different types and sizes shall be placed in separate shipping containers and each container clearly marked with the size, rating, material specification and item code.

13.0 All items shall be inspected and approved by MECON Inspector or any other agency authorized by MECON.

14.0 Any additional requirements specified in the requisition, shall be fully complied with.

15.0 Non-metallic ring gaskets as per ASME B16.21 shall match flanges to ASME B16.5 upto 24" (except 22" size) and to ASME B16.47B above 24" unless specified otherwise. For 22" size, the matching flange standard shall be MSS-SP44 unless specified otherwise.

16.0 Spiral wound gasket as per ASME B16.20 shall match flanges to ASME B16.5 upto 24" (except 22" size) and to ASME B16.47B above 24" unless specifically mentioned otherwise. For 22" size, the matching flange standard shall be MSS-SP44 unless specified otherwise.

17.0 The following abbreviations have been used in the Material Requisition for Spiral Wound Gaskets :

(I)	:	Inner Ring
(O)	:	Outer Ring
CAF	:	Compressed Asbestos Fibre
GRAFIL	:	Grafoil Filler

TECHNICAL NOTES FOR BOLTS & NUTS

1.0 The process of manufacture, heat treatment, chemical & mechanical requirements and marking for all stud bolts, m/c bolts, jack screws & nuts shall be in accordance with the codes / standards and specification given in the requisition. The applicable identification symbol in accordance with the material specification shall be stamped on each bolt and nut. Vendor shall strictly comply with MR / PR stipulations and no deviations shall be permitted.

2.0 Test reports shall be supplied for all mandatory tests as per the relevant material specifications.

3.0 Material test certificate shall also be furnished. (Heat Analysis, Product Analysis and Mechanical Requirement)

4.0 Stress Rupture Test as detailed in ASTM A453 shall be carried out for all ASTM A453 bolting material irrespective of the temperature.

5.0 All bolting shall be as per ANSI B 18.2.1 for studs. M/c bolts and jackscrews and ANSI BI8.2.2 for nuts.

6.0 Threads shall be unified (UNC for 1" dia and BUN for> 1" dia) as per ANSI B.1.1 with class 2A fit for studs, M/c bolts and jackscrews and class 2B fit for nuts.

7.0 Stud bolts shall be threaded full length with two heavy hexagonal nuts. Length tolerance shall be in accordance with the requirement as per ANSI B 16.5.

8.0 The nuts shall be double chamfered, semi-finished, heavy hexagonal type and shall be made by the hot forged process and stamped as per respective material specification.

9.0 Heads of jackscrews and m/c bolts shall be heavy hexagonal type. Jackscrew end shall be rounded.

10.0 Each size of studs & m/c bolts with nuts and jackscrews shall be supplied in separate containers marked with size and material specifications. 'CRYO' shall be marked additionally in case 'CRYO' is specified in the requisition.

11.0 All items shall be inspected and approved (stagewise) by MECON inspector or any other agency authorized by MECON.

12.0 The heat treatment for stud bolts & nuts shall be as per code unless mentioned otherwise.

13.0 All austenitic stainless steel bolts, nuts, screws shall be supplied in solution annealed condition unless specified otherwise in the material specification.

14.0 Any additional requirements specified in the requisition shall be fully complied with.

15.0 Stud bolts, nuts & jackscrews shall be impact tested wherever specified in the material specification and also where the material specification is indicated as "CRYO". For" S.S. nuts and bolts minimum impact energy absorption shall be 27 Joules and test temperature shall be -196°C unless mentioned otherwise. For other materials impact energy and test shall be as per respective code.

16.0 Bolts / nuts of material of construction B7M / 2HM shall be 100% Hardness tested as per supplementary requirement S3 of ASTM A 193.

17.0 When specified as galvanized, the studs, m/c bolts and nuts shall be 'hot dip zinc coated' in accordance with requirements of 'class C' of 'ASTM A 153'. As an alternative, electro-galvanizing as per IS 1573, 'Service Grade Number 2' is also acceptable.

18.0 All Stud Bolts of Bolt diameter size 1" and above shall be provided with three nuts irrespective of whatever has been specified elsewhere in the MR.

PIPING MATERIAL SPECIFICATION
(DULIAJAN FEEDER LINE PROJECT)

DOC. NO. MEC/05/28/0085/M/000/1092, R0

(PROCESS & PIPELINE DESIGN SECTION)

MECON LIMITED

DELHI - 110 092

TABLE OF CONTENTS

1.0	SCOPE
2.0	CODES AND STANDARDS
3.0	MATERIAL SPECIFICATION
4.0	CLASS DESIGNATION CODE
5.0	PIPELINE
6.0	PIPING
7.0	FITTINGS
8.0	BENDS
9.0	FLANGES
10.0	GASKETS
11.0	BOLTING
12.0	THREAD SEALANT
13.0	VALVES
14.0	QUICK OPENING END CLOSURE
15.0	HYDROTESTING VENTS AND DRAINS
16.0	PIPELINE SPECIALITY ITEMS
TABLE-1	PIPE WALL THICKNESS DETAILS FOR MAINLINE
TABLE-2	INDEX OF PIPING MATERIAL SPECIFICATIONS
APPENDICES-I TO VI	PIPING MATERIAL SPECIFICATIONS AS PER TABLE - 2

PREPARED BY:	CHECKED BY:	APPROVED BY:	DATE ISSUED:
			July, 2026

1.0 SCOPE

This specification covers the requirements of various piping materials used in piping/ pipeline system handling Natural Gas / Re-gasified Liquid Natural Gas (RLNG) and associated utilities in the pipeline.

2.0 CODES AND STANDARDS

2.1 Pipeline and terminal facilities envisaged as a part of this project shall be designed and engineered primarily in accordance with the provision of ASME B 31.8 – Gas Transmission & Distribution Piping System - Latest edition and OISD Standard 226-Natural Gas Transmission Pipeline and City Gas Distribution Networks.

2.2 All codes standards and specifications referred herein shall be the latest edition of such documents.

2.3 For sake of brevity, the initials of the society to which the codes are referred are omitted in the specification, for example, B16.5 is a code referring to ANSI/ ASME, A 105 is a code referring to ASTM.

2.4 In addition, MECON specifications for various piping and pipeline materials shall also be applicable.

3.0 MATERIAL SPECIFICATION

Piping material specifications are classified for the general purpose of selection of material for the class of services. The maximum design pressure and design temperature together with the fluid in line governs the selection of material specifications. Deviation of materials from class specifications may occur due to specific design condition. These deviations are permissible if they are equal or better than the individual class requirements.

4.0 CLASS DESIGNATION CODE

The piping class designation consist of three digits numbering system made up of letter, number and letter e. g. A1A, B1A, D1A, etc as follows:

First letter indicates ANSI class rating e. g.
A-Class 150
B-Class 300
D-Class 600

The middle number indicates differences in the specification within the same rating and material.

The last letter indicates type of material e. g.

A-Carbon Steel

5.0 PIPELINE

The material for line pipe shall be as per the requirements of specification as indicated in Table-1.

6.0 PIPING

6.1 Carbon steel pipe shall be made by open hearth, electric furnace or basic oxygen process only. The steel used shall be fully killed and made with fine grain structure. The grade and wall thickness of various sizes of pipes shall be as per piping material specification for the applicable class.

6.2 Pipe dimension shall be in accordance with ANSI B 36.10 for carbon steel pipes and ANSI B 36.19 for stainless steel pipes.

6.3 All pipe threads shall conform to American Standard taper as per ANSI B 1.20.1 NPT, unless otherwise specified.

6.4 For butt weld end, bevel shall be in accordance to ANSI B 16.25/ API 5L as applicable.

7.0 FITTINGS

7.1 Fully killed carbon steel shall be used in the manufacture of fittings.

7.2 Threaded joints, if used shall conform to American Standard taper as per ANSI 1.20.1 NPT.

7.3 Dimension of socket weld/ screwed fittings shall conform to ASME B 16.11

7.4 Bore of socket welded fittings shall suit O. D. of pipe and its thickness.

7.5 Dimensions of butt-welded carbon steel fittings shall be as per ASME B 16.9 / MSS-SP-75, as applicable.

7.6 Butt welding ends shall conform to ANSI B 16.25/ API 5L. In case of difference in thickness of matching ends, requirements of ASME B 31.8 shall apply.

7.7 Integrally reinforced forged branch fittings such as sockolet, threadolet, weldolet, nippolet etc. shall be as per MSS-SP-97. Fittings not covered in ASME B 16.9 and MSS-SP-97 shall conform to manufacturer's standard.

7.8 Fittings thickness tolerances shall match pipe thickness tolerance.

8.0 BENDS

8.1 Unless otherwise specified for terminal piping, the elbow of radius R = 1.5 D shall only be used.

8.2 The radius of cold field bends shall not be less than 30 times the nominal diameter for pipes up to nominal diameter of 16" and shall not be less than 40 times the nominal diameter for pipes of nominal diameter of 18" and above. Limited use of long radius bends (R = 6D) may be permitted for reason of space constraints.

9.0 FLANGES

9.1 Flange rating shall be same as ANSI B 16.5/MSS-SP-44/ B 16.47 Series A as specified.

9.2 Dimensions of flanges shall be in accordance with ANSI B 16.5/ B 16.47 Series A, as applicable.

9.3 Neck of Weld Neck (WN) flanges to suit pipe bore and thickness.

9.4 Bore of Socket Welded (SW) flanges shall suit pipe O.D. and its thickness.

9.5 Threads for screwed flanges if used shall conform to American Standard taper as per ANSI B 1.20.1 NPT.

9.6 Sizes for blind flanges shall be indicated by nominal pipe sizes.

9.7 Carbon steel flanges faces shall have smooth finish as indicated in the material specification. Flanges faces shall have smooth finish to 125-250 micro inches AARH as per MSS-SP-6.

9.8 Butt welding ends of WN flanges shall conform to ANSI B 16.25.

9.9 Spectacle blind/ spacer & blinds shall be in accordance with ASME B 16.48 / Manufacturer's Standard. Spectacle blind shall be used for sizes up to 8" NB and spacer & blind for 10" & above shall be used.

9.10 Two jack screws 180° apart shall be provided for all spectacle blind assemblies. The jack screws shall be as per MECON's standard.

10.0 **GASKETS**

10.1 Spiral wound metallic gaskets shall conform to B 16.20 and API 601 shall be provided with graphite filler. All spiral wound gaskets shall be provided with stainless steel centering ring.

11.0 **BOLTING**

11.1 Nuts for stud bolts shall be American Standard Hexagonal Heavy series and double chamfered.

11.2 Dimension and tolerances for stud bolts and nuts shall be as per ANSI B 18.2.1 and 18.2.2 with full threading to ANSI B 1.1 Class 2A thread for bolts and Class 2B for nuts. Diameter and length of stud bolts shall be as per ANSI B 16.5/ ASME B 16.47 with full threading.

11.3 Threads for nuts shall be as per ANSI B 1.1, as follows:

Nuts for stud dia ¼" to 1"	:	UNC-2B
Nuts for stud bolts dia $1^{1/8}$" to 3 ¼"	:	8UN-2B

11.4 Threads for stud bolts shall be as per ANSI B 1.1, as follows.

Stud bolts dia ¼" to 1"	:	UNC-2A
Stud bolts dia $1^{1/8}$" to 3 ¼"	:	8UN-2A

11.5 Heads of jack screws shall be heavy hexagonal type. Jack screw end shall be rounded. Stud bolts shall be fully threaded with two hexagonal nuts.

12.0 **THREAD SEALANT**

12.1 Threaded joints shall be made with 1" wide PTFE Jointing tape.

13.0 VALVES

13.1 Valve ends shall be as per piping material specifications (Appendices).

13.2 Flange dimensions and face finish of flanged end valves shall confirm to clause 9.0 of this specification.

13.3 Butt welding ends of Butt-Welded valves shall conform to ANSI B 16.25.

13.4 Face to face and end to end dimensions shall conform to applicable standards.

13.5 Buried valves on mainline shall be provided with stem extension, sealant, vent/drain & shall have butt welded ends.

13.6 Sectionalizing Valves (Block valves) installed on the main pipeline shall be Ball valves with butt welded ends and shall be full bore to allow smooth passage of cleaning pigs as well as intelligent pigs.

13.7 Unless specified otherwise. Valves shall confirm to the following standards:

<u>Screwed / Socket welded / Flanged end valves (1 ½" and below)</u>

Ball Valves	-	BS 5351(latest)
Plug Valves	-	BS 5353(latest)
Globe Valves	-	BS 5352(latest)
Gate Valves	-	API 602(latest)

<u>Flanged / Butt weld end Valves (2" and above)</u>

Ball Valves	-	API 6D
Plug Valves	-	API 6D
Check Valves	-	API 6D
Globe Valves	-	BS 1873
Gate Valves	-	API 6D

13.8 Manual Valve operators shall be as indicated below, unless specified otherwise in the P&ID.

a) **Gate and Globe Valves**

i) For ANSI class 150 & 300 - Hand Wheel operated for size ≤12" NB.
Gear operated for size ≥14" NB.

ii) For ANSI class 600 -Hand Wheel operated for size ≤10" NB.
Gear operated for size ≥12" NB.

b) **Ball and Plug Valves**

i) For ANSI class 150, 300, 600 – Wrench operated for size ≤4" NB.
Gear operated for size ≥6" NB.

c) **Actuated Valves**- Actuated valves shall be as per P & ID.

14.0 QUICK OPENING END CLOSURE

Quick opening end closure to be installed on scrapper traps shall be equipped with safety locking devices in compliance with section VIII, division 1, UG-35.2 of ASME Boiler and Pressure Vessel code.

15.0 HYDRO TESTING VENTS AND DRAINS

High point vents and low point drains required for the purpose of hydro testing shall be of size 1" and consist of sockolet, Plug & Ball valve for vent, Globe & Ball Valve for drain, flange & blind flange.

16.0 PIPELINE SPECIALITY ITEMS

Pipeline Specialty items viz., Scrapper Traps, Flow Tee, Insulating Joints, LR bends, QOEC for Venting shall be as per respective data sheets, specifications and Project Specific drawing showing Mainline & Terminal materials.

TABLE-1

PIPE WALL THICKNESS DETAIL FOR MAIN LINE

Sl. No.	Pipe Material Description	Size (NB)	Thickness (mm)	Length
1.	API 5L Gr. X-70, PSL-2	24”	9.53	As per SOR Quantity
2.	API 5L Gr. X-70, PSL-2	24”	11.13	As per SOR Quantity
3.	API 5L Gr. X-70, PSL-2	24”	12.70	As per SOR Quantity
4.	API 5L Gr. X-70, PSL-2	24”	15.88	As per SOR Quantity

TABLE-2

INDEX OF PIPING MATERIAL SPECIFICATIONS

Class	Service	C.A. (mm)	Basic Material	Design Code	Enclosed as
A1A	Natural Gas/ RLNG	1.5	ASTM A 106 Gr. B / API 5L Gr. B / X-52	ANSI B31.8	Appendix-I
A4A	Natural Gas/ RLNG	1.5	ASTM A 333 Gr. 6	ANSI B31.8	Appendix-II
B1A	Natural Gas/ RLNG	1.5	ASTM A 106 Gr. B /API 5L Gr. B	ANSI B31.8	Appendix-III
B4A	Natural Gas/ RLNG	1.5	ASTM A 333 Gr. 6	ANSI B31.8	Appendix-IV
D1A	Natural Gas/ RLNG	1.5	ASTM A 106 Gr. B /API 5L Gr. B	ANSI B31.8	Appendix-V
D4A	Natural Gas/ RLNG	1.5	ASTM A 333 Gr. 6	ANSI B31.8	Appendix-VI

ANSI CLASS: 150 #	CORROSION ALLOWANCE: 1.5 MM	TEMP °C	−29	38.0	50	100	150	200
		PRESS. KG/CM^{2}g	19.98	19.98	19.57	18.05	16.11	14.07
SERVICE : NATURAL GAS		BASE MATERIAL: CARBON STEEL (MATERIAL GROUP 1.1)						

NOTES: −

1. ALL VENTS & DRAIN SHALL BE PROVIDED WITH PLUG VALVE UNLESS MENTIONED OTHERWISE IN P&IDs.
2. FITTINGS SHALL BE OF SEAMLESS CONSTRUCTION UP TO 16" AND SHALL BE OF WELDED CONSTRUCTION 18" AND ABOVE.
3. WALL THICKNESS FOR LINEPIPE USED IN VARIOUS SECTIONS SHALL BE AS PER TABLE−1 OF PMS.
4. BALL VALVE TO BE USED IN MAINLINE SHALL HAVE BUTT WELDED ENDS EXCEPT FOR THE VALVES USED FOR HOT TAPPING WHICH SHALL BE ONE SIDE BUTT WELDED AND OTHER SIDE FLANGED.
5. PROCUREMENT OF MATERIALS SHALL BE AS PER DETAILED RELEVANT SPECIFICATIONS.
6. DESIGN PRESSURE & TEMP. FOR PIPELINE AND RELATED FACILITIES ARE 19 Kg/Cm^{2}g & (−29° TO +65°C) RESPECTIVELY.
7. PRESSURE−TEMPERATURE RATING INDICATED ARE FOR FLANGES ONLY IN ACCORDANCE WITH ANSI B 16.5
8. FOR VALVES,STEELPIPE AND ASSOCIATED STEEL COMPONENTS OF 2" AND LARGER NOTCH TOUGHNESS PROPERTIES SHALL BE AS SPECIFIED IN RELEVANT SPECIFICATIONS/CODES, MECON'S STANDARD TECHNICAL SPECIFICATIONS AND DATA SHEETS ETC.
9. AT STATIONS, BRANCH CONNECTIONS SHALL BE AS PER BRANCH CONNECTION TABLE BELOW
10. ALL BUTT WELDS SHALL BE 100% RADIOGRAPHED.
11. 100% OF SOCKET WELD SHALL BE SUBJECTED TO MPI/DPT.
12. PRESSURE−TEMPERATURE RATING OF VALVE BODY SHALL BE AS PER API 6D.
13. PIPELINE DESIGN CODE − ASME B 31.8 & OISD 226.
14. FOR PIPELINE SPECIALITY ITEMS (SCRAPPER TRAP, BARRED TEE, IJ, LR BENDS ETC.) AND THEIR MATERIAL DESCRIPTIONS REFER DATA SHEET OF RESPECTIVE ITEMS.

STATION PIPING MATERIAL SPECIFICATION

ITEM	SIZE	DESCRIPTION
MAINTENANCE JOINTS	ALL	FLGD., BUT TO BE KEPT MINIMUM
PIPE JOINTS	1.5" & BELOW	SOCKET WELD
	2" & ABOVE	BUTT WELDED
DRAINS	ON LINES ≤ 1.5"	3/4", AS PER MEC/SD/05/21/15/03
	ON LINES ≥ 2"	3/4" OR AS PER P&ID, MEC/SD/05/21/15/01
VENTS	ON LINES ≤ 1.5"	3/4", AS PER MEC/SD/05/21/15/03
	ON LINES ≥ 2"	3/4" OR AS PER P&ID, MEC/SD/05/21/15/01
TEMP. CONN.	1.5"	FLGD. INSTL. AS PER MEC/SD/05/21/15/02
PRESS CONN.	3/4"	SCH. 160 NIPPLE WITH BALL VALVE TO SPEC. INSTALLATION AS PER MEC/SD/05/21/15/05

BRANCH CONNECTIONS

E	TEES BW
H	H. COUPLING
P	PIPE TO PIPE
R	REINFORCED
S	SOCKETLETS
T	TEES SW/
W	WELDOLETS
D	TEE WITH RED.

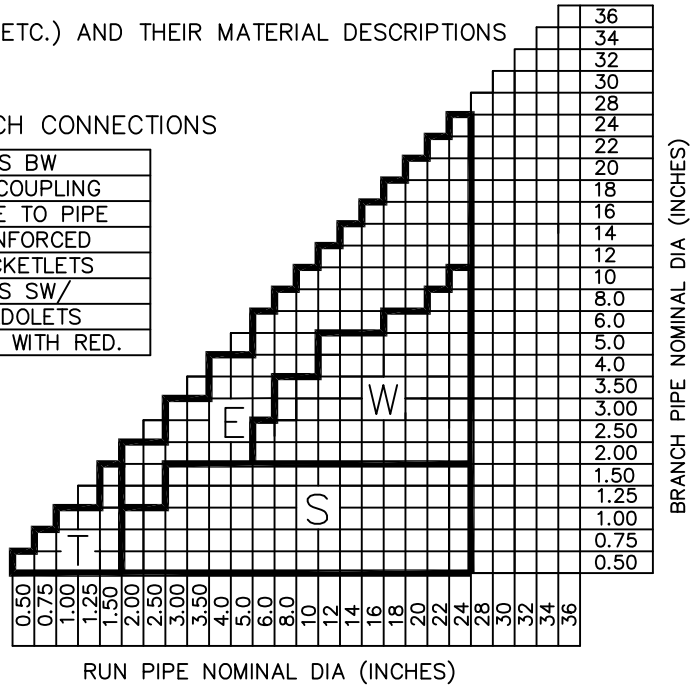

SECTION: OIL & GAS

NATURAL GAS PIPELINE PROJECT

PIPING MATERIAL SPECIFICATIONS 150# (A1A)

APPENDIX−I

SCALE : N.T.S.

(SH. 1 OF 2)

REV 0

मेकॉन लिमिटेड

MECON LIMITED

APPROVED	DRWN	DSGN	K.P.	S.S.
SUNIL KUMAR				
	NAME			
	DATE			
	CHKD			
	DATE			

REVISIONS: REV NO | DATE | ZONE | DESCRIPTIONS | BY | APPRD

REFERENCES

DRG. NO.

PIPELINE/PIPING DESIGN CODE		ASME B 31.8/ OISD 226								DESIGN FACTOR – 0.5										
ITEM	NOMINAL DIAMETER (INCHES)	0.50	0.75	1.00	1.50	2.00	3.00	4.00	6.00	8.00	10.0	12.0	14.0	16.0	18.0	20.0	22.0	24.0		
PIPE	WALL THICKNESS (MM/SCH)	S160	S160	XS	XS	XS	STD	STD	STD	S20	S20	S20	S10	S10	S10	7.1	7.9	8.7		
	MATERIAL	ASTM A106 GR.B				ASTM A106 GR.B (CHARPY)				API 5L GR.B PSL2										
	DIMENSION STD.	B36.10								API 5L										
	METHOD OF MANUFACTURE, ENDS	SEAMLESS PE				SEAMLESS BE										SAW, BE				
FLANGE	MATERIAL AND GRADE	ASTM A 105				ASTM A 105 (CHARPY)														
	TYPE, FLANGE FACING	SW. RF 125AARH				WN. THICKNESS TO MATCH PIPE THICKNESS, RF 125AARH														
	DIMENSION STD.	B16.5																		
BLIND FLANGE	MATERIAL AND GRADE	ASTM A 105				ASTM A 105 (CHARPY)														
	FLANGE FACING	RF 125AARH																		
	DIMENSION STD.	B16.5																		
BLANK	MATERIAL AND GRADE	ASTM A 105				ASTM A 105 (CHARPY)														
	FLANGE FACING	FF 125AARH																		
	DIMENSION STD.	B16.48																		
	TYPE	FIG.8 FLANGE									SPACER & BLIND									
BOLTING	STUD BOLTS (FULLY THREADED)	A 193 GR B7, B–18.2																		
	NUTS (HEAVY HEXAGONAL)	A 194 GR 2H, B–18.2																		
GASKET	TYPE, MATERIAL AND Dmn. STD.	SP. WND SS 316+GRAPHITE FILLED AS PER B 16.20/ANSI B 16.5																		
ELBOW–90 ELBOW–45	MATERIAL	ASTM A 105				ASTM A 234 GR.WPB (CHARPY)										ASTM A 234 GR.WPB–W (CHARPY)				
	END DETAIL	SW,6000#		SW,3000#		BW, 1.5D														
	DIMENSION STD.	B–16.11				B–16.9														
T–EQUAL T–RED	MATERIAL	ASTM A 105				ASTM A 234 GR.WPB (CHARPY)										ASTM A 234 GR.WPB–W (CHARPY)				
	END DETAIL	SW,6000#		SW,3000#		BW														
	DIMENSION STD.	B–16.11				B–16.9														
CAP	MATERIAL	ASTM A 105				ASTM A 234 GR.WPB (CHARPY)														
	END DETAIL	SCRF6000		SCRF3000		BW, THICKNESS TO MATCH PIPE THICKNESS														
	DIMENSION STD.	B–16.11				B–16.9														
FITTING	MATERIAL	ASTM A 105				ASTM A 234 GR.WPB (CHARPY)										ASTM A 234 GR.WPB–W (CHARPY)				
	END DETAIL	SW,6000#		SW,3000#		BW, THICKNESS TO MATCH PIPE THICKNESS														
	DIMENSION STD.	B–16.11				B–16.9														
	TYPE	COUPLING FULL,HALF LH.,RED.				RED. CON. RED. ECC.														
O'LET	MATERIAL	ASTM A 105				ASTM A 105 (CHARPY)														
	END DETAIL	SW,6000#		SW,3000#		BW														
	DIMENSION STD.	MSS–SP97				MSS–SP97														
	TYPE	SOCKOLET				WELDOLET														

SECTION: OIL & GAS

NATURAL GAS PIPELINE PROJECT

PIPING MATERIAL SPECIFICATIONS 150# (A1A)

APPENDIX–I

SCALE : N.T.S.

(SH. 2 OF 2)

REV 0

MECON LIMITED

मेकॉन लिमिटेड

	NAME	DATE
DRWN		
DSGN	K.P	
CHKD	S.S.	
APPROVED	SUNIL KUMAR	

REVISIONS

REV NO	DATE	ZONE	DESCRIPTIONS	BY	APPRD

REFERENCES

DRG. NO.

ANSI CLASS: 150#	CORROSION ALLOWANCE: 1.5MM	TEMP °C	−45	38	50	100	150	
		PRESS. KG/CM^{2}g	18.76	18.76	18.55	17.74	16.11	
SERVICE : RLNG		BASE MATERIAL: CARBON STEEL (MATERIAL GROUP 1.3)						

NOTES: −

1. ALL VENTS & DRAIN SHALL BE PROVIDED WITH PLUG VALVE UNLESS MENTIONED OTHERWISE IN P&IDs.
2. FITTINGS SHALL BE OF SEAMLESS CONSTRUCTION UP TO 16" AND SHALL BE OF WELDED CONSTRUCTION 18" AND ABOVE.
3. WALL THICKNESS FOR LINEPIPE USED IN VARIOUS SECTIONS SHALL BE AS PER TABLE−1 OF PMS.
4. BALL VALVE TO BE USED IN MAINLINE SHALL HAVE BUTT WELDED ENDS EXCEPT FOR THE VALVES USED FOR HOT TAPPING WHICH SHALL BE ONE SIDE BUTT WELDED AND OTHER SIDE FLANGED.
5. PROCUREMENT OF MATERIALS SHALL BE AS PER DETAILED RELEVANT SPECIFICATIONS.
6. PRESSURE−TEMPERATURE RATING INDICATED ARE FOR FLANGES ONLY IN ACCORDANCE WITH ANSI B 16.5
7. FOR VALVES,STEELPIPE AND ASSOCIATED STEEL COMPONENTS OF 2" AND LARGER NOTCH TOUGHNESS PROPERTIES SHALL BE AS SPECIFIED IN RELEVANT SPECIFICATIONS/CODES, MECON'S STANDARD TECHNICAL SPECIFICATIONS AND DATA SHEETS ETC.
8. AT STATIONS, BRANCH CONNECTIONS SHALL BE AS PER BRANCH CONNECTION TABLE BELOW
9. ALL BUTT WELDS SHALL BE 100% RADIOGRAPHED.
10. 100% OF SOCKET WELD SHALL BE SUBJECTED TO MPI/DPT.
11. PRESSURE−TEMPERATURE RATING OF VALVE BODY SHALL BE AS PER API 6D.
12. PIPELINE DESIGN CODE − ASME B 31.8 & OISD 226.
13. FOR PIPELINE SPECIALITY ITEMS (SCRAPPER TRAP, FLOW TEE, IJ, LR BENDS ETC.) AND THEIR MATERIAL DESCRIPTIONS, REFER DATA SHEET OF RESPECTIVE ITEMS.
14. DESIGN PRESSURE&TEMP. FOR PIPELINE AND RELATED FACILITIES ARE 19 KG/cm^{2}g &(−45° TO +65° C) RESPECTIVELY.

STATION PIPING MATERIAL SPECIFICATION

ITEM	SIZE	DESCRIPTION
MAINTENANCE JOINTS	ALL	FLGD., BUT TO BE KEPT MINIMUM
PIPE JOINTS	1.5" & BELOW	SOCKET WELD
	2" & ABOVE	BUTT WELDED
DRAINS	ON LINES ≤ 1.5"	3/4", AS PER MEC/SD/05/21/15/03
	ON LINES ≥ 2"	3/4" OR AS PER P&ID, MEC/SD/05/21/15/01
VENTS	ON LINES ≤ 1.5"	3/4", AS PER MEC/SD/05/21/15/03
	ON LINES ≥ 2"	3/4" OR AS PER P&ID, MEC/SD/05/21/15/01
TEMP. CONN.	1.5"	FLGD. INSTL. AS PER MEC/SD/05/21/15/02
PRESS CONN.	3/4"	NIPPLE WITH BALL VALVE TO SPEC. INSTALLATION AS PER MEC/SD/05/21/15/05

BRANCH CONNECTIONS

E	TEES BW
H	H. COUPLING
P	PIPE TO PIPE
R	REINFORCED
S	SOCKETLETS
T	TEES SW/
W	WELDOLETS
D	TEE WITH RED.

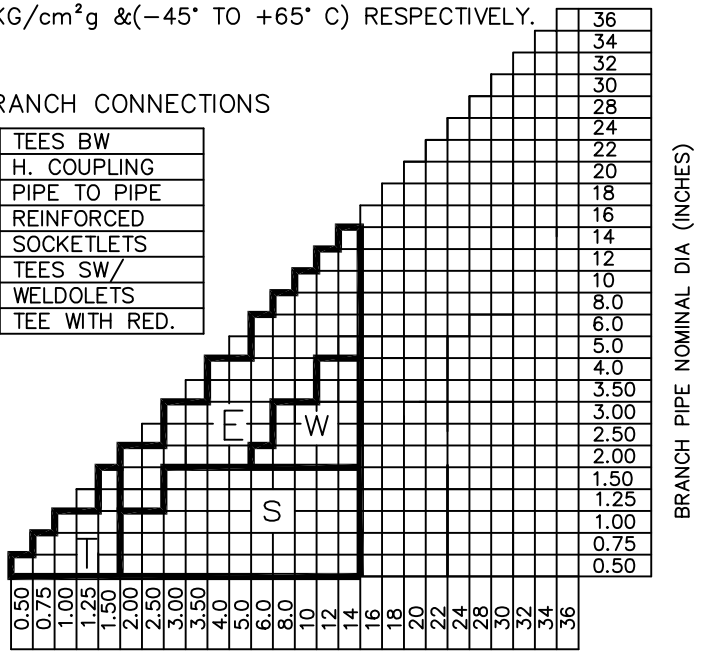

APPROVED | DRWN | DSGN KP | NAME | DATE | CHKD SS | DATE

SUNIL KUMAR

SECTION: OIL & GAS

PIPING MATERIAL SPECIFICATIONS 150# (A4A)

NATURAL GAS PIPELINE PROJECT

REVISIONS: REV NO | DATE | ZONE | DESCRIPTIONS | BY | APPRD

REFERENCES

SCALE : N.T.S.

APPENDIX−II

(SH. 1 OF 2)

DRG. NO.

REV 0

MECON LIMITED

मेकॉन लिमिटेड

PIPELINE/PIPING DESIGN CODE		ASME B 31.8/ OISD 226												DESIGN FACTOR – 0.5		
ITEM	NOMINAL DIAMETER (INCHES)	0.50	0.75	1.00	1.50	2.00	3.00	4.00	6.00	8.00	10.0	12.0	14.0			
PIPE	WALL THICKNESS (MM/SCH)	S160	S160	XS	XS	XS	STD	STD	STD	STD	STD	STD	STD			
	MATERIAL	ASTM A333 GR.6														
	DIMENSION STD.	B36.10														
	METHOD OF MANUFACTURE, ENDS	SEAMLESS PE				SEAMLESS BE										
FLANGE	MATERIAL AND GRADE	ASTM A 350 GR. LF2, CL–I														
	TYPE, FLANGE FACING	SW. RF 125AARH				WN. THICKNESS TO MATCH PIPE THICKNESS, RF 125AARH										
	DIMENSION STD.	B16.5														
BLIND FLANGE	MATERIAL AND GRADE	ASTM A 350 GR. LF2, CL–I														
	FLANGE FACING	RF 125AARH														
	DIMENSION STD.	B16.5														
BLANK	MATERIAL AND GRADE	ASTM A 350 GR. LF2, CL–I														
	FLANGE FACING	FF 125AARH														
	DIMENSION STD.	B16.48														
	TYPE	FIG.8 FLANGE												SPACER & BLIND		
BOLTING	STUD BOLTS (FULLY THREADED)	A 320 GR L7, B–18.2														
	NUTS (HEAVY HEXAGONAL)	A 194 GR 4, B–18.2														
GASKET	TYPE, MATERIAL AND Dmn. STD.	SPIRAL, SP.WND SS316+GRAPHITE FILLED, B–16.20–ANSI B16.5,														
ELBOW–90 ELBOW–45	MATERIAL	ASTM A350 GR.LF2						ASTM A 420 GR.WPL6								
	END DETAIL	SW,6000#		SW,3000#				BW, 1.5D								
	DIMENSION STD.	B–16.11						B–16.9								
T–EQUAL T–RED	MATERIAL	ASTM A350 GR.LF2						ASTM A 420 GR.WPL6								
	END DETAIL	SW,6000#		SW,3000#				BW								
	DIMENSION STD.	B–16.11						B–16.9								
CAP & PLUG (UPTO 1.5")	MATERIAL	ASTM A350 GR.LF2						ASTM A 420 GR.WPL6								
	END DETAIL	SCRF6000		SCRF3000				BW, THK TO MATCH PIPE THICKNESS								
	DIMENSION STD.	B–16.11						B–16.9								
FITTING	MATERIAL	ASTM A350 GR.LF2						ASTM A 420 GR.WPL6								
	END DETAIL	SW–6000		SW–3000				BW, THICKNESS TO MATCH PIPE THICKNESS								
	DIMENSION STD.	B–16.11						B–16.9								
	TYPE	COUPLING FULL,HALF LH.,RED.						RED. CON. RED. ECC.								
O'LET	MATERIAL	ASTM A350 GR.LF2						ASTM A 350 GR.LF2								
	END DETAIL	SW,6000#		SW,3000#				BW								
	DIMENSION STD.	MSS–SP97						MSS–SP97								
	TYPE	SOCKOLET						WELDOLET								

SECTION: OIL & GAS

NATURAL GAS PIPELINE PROJECT

PIPING MATERIAL SPECIFICATIONS 150# (A4A)

APPENDIX–II

SCALE : N.T.S.

(SH. 2 OF 2)

REV 0

मेकॉन लिमिटेड

MECON LIMITED

	NAME	DATE
DSGN	KP	
DRWN		
CHKD	SS	
APPROVED	SUNIL KUMAR	

REV NO	DATE	ZONE	DESCRIPTIONS	BY	APPRD

REVISIONS

REFERENCES

DRG. NO.

ANSI CLASS: 300 #	CORROSION ALLOWANCE: 1.5 MM	TEMP °C	−29.0	38.0	50	100	150	200
		PRESS. KG/CM^{2}g	52.1	52.1	51.10	47.52	45.98	44.60
SERVICE : NATURAL GAS		BASE MATERIAL: CARBON STEEL (MATERIAL GROUP 1.1)						

NOTES: –

1. ALL VENTS & DRAIN SHALL BE PROVIDED WITH PLUG VALVE UNLESS MENTIONED OTHERWISE IN P&IDs.
2. FITTINGS SHALL BE OF SEAMLESS CONSTRUCTION UP TO 16" AND SHALL BE OF WELDED CONSTRUCTION 18" AND ABOVE.
3. WALL THICKNESS FOR LINEPIPE USED IN VARIOUS SECTIONS SHALL BE AS PER TABLE–1 OF PMS.
4. BALL VALVE TO BE USED IN MAINLINE SHALL HAVE BUTT WELDED ENDS EXCEPT FOR THE VALVES USED FOR HOT TAPPING WHICH SHALL BE ONE SIDE BUTT WELDED AND OTHER SIDE FLANGED.
5. PROCUREMENT OF MATERIALS SHALL BE AS PER DETAILED RELEVANT SPECIFICATIONS.
6. DESIGN PRESSURE & TEMP. FOR PIPELINE AND RELATED FACILITIES ARE 49 Kg/cm² g & (−29° TO +65°C) RESPECTIVELY.
7. PRESSURE–TEMPERATURE RATING INDICATED ARE FOR FLANGES ONLY IN ACCORDANCE WITH ANSI B 16.5
8. FOR VALVES,STEELPIPE AND ASSOCIATED STEEL COMPONENTS OF 2" & LARGER NOTCH TOUGHNESS PROPERTIES SHALL BE AS SPECIFIED. IN RELEVANT SPECIFICATIONS/CODES, MECON'S STANDARD TECHNICAL SPECIFICATIONS AND DATA SHEETS ETC.
9. AT STATIONS, BRANCH CONNECTIONS SHALL BE AS PER BRANCH CONNECTION TABLE BELOW
10. ALL BUTT WELDS SHALL BE 100% RADIOGRAPHED.
11. 100% OF SOCKET WELD SHALL BE SUBJECTED TO MPI/DPT.
12. PRESSURE–TEMPERATURE RATING OF VALVE BODY SHALL BE AS PER API 6D.
13. PIPELINE DESIGN CODE – ASME B 31.8 & OISD 226.
14. FOR PIPELINE SPECIALITY ITEMS (SCRAPPER TRAP, BARRED TEE, IJ, LR BENDS ETC.) AND THEIR MATERIAL DESCRIPTIONS REFER DATA SHEET OF RESPECTIVE ITEMS.

STATION PIPING MATERIAL SPECIFICATION

ITEM	SIZE	DESCRIPTION
MAINTENANCE JOINTS	ALL	FLGD., BUT TO BE KEPT MINIMUM
PIPE JOINTS	1.5" & BELOW	SOCKET WELD
	2" & ABOVE	BUTT WELDED
DRAINS	ON LINES ≤ 1.5"	3/4", AS PER MEC/SD/05/21/15/03
	ON LINES ≥ 2"	3/4" OR AS PER P&ID, MEC/SD/05/21/15/01
VENTS	ON LINES ≤ 1.5"	3/4", AS PER MEC/SD/05/21/15/03
	ON LINES ≥ 2"	3/4" OR AS PER P&ID, MEC/SD/05/21/15/01
TEMP. CONN.	1.5"	FLGD. INSTL. AS PER MEC/SD/05/21/15/02
PRESS CONN.	3/4"	SCH. 160 NIPPLE WITH BALL VALVE TO SPEC. INSTALLATION AS PER MEC/SD/05/21/15/05

BRANCH CONNECTIONS

E	TEES BW
H	H. COUPLING
P	PIPE TO PIPE
R	REINFORCED
S	SOCKETLETS
T	TEES SW/
W	WELDOLETS
D	TEE WITH RED.

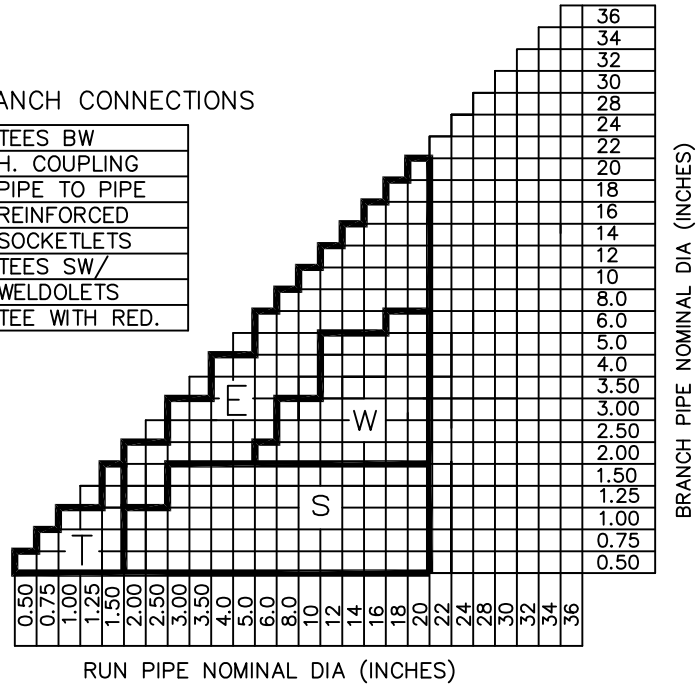

APPROVED | DRWN | DSGN KP | NAME | DATE | CHKD SS | DATE

SUNIL KUMAR

SECTION: OIL & GAS

REVISIONS: REV NO | DATE | ZONE | DESCRIPTIONS | BY | APPRD | REFERENCES | DRG. NO.

NATURAL GAS PIPELINE PROJECT

PIPING MATERIAL SPECIFICATIONS 300# (B1A)

SCALE : N.T.S.

APPENDIX–III (SH. 1 OF 2)

REV 0

मेकॉन लिमिटेड

MECON LIMITED

PIPELINE/PIPING DESIGN CODE		ASME B 31.8/ OISD 226									DESIGN FACTOR – 0.5							
ITEM	NOMINAL DIAMETER (INCHES)	0.50	0.75	1.00	1.50	2.00	3.00	4.00	6.00	8.00	10.0	12.0	14.0	16.0	18.0	20.0		
PIPE	WALL THICKNESS (MM/SCH)	S160	S160	XS	XS	XS	STD	S40	S40	7.9	STD	S40	S40	S40	S40	15.9		
	MATERIAL	ASTM A106 GR.B				ASTM A106 GR.B (CHARPY)					API 5L GR.B PSL2							
	DIMENSION STD.	B36.10									API 5L							
	METHOD OF MANUFACTURE, ENDS	SEAMLESS PE				SEAMLESS BE										BE SAW		
FLANGE	MATERIAL AND GRADE	ASTM A 105				ASTM A 105 (CHARPY)												
	TYPE, FLANGE FACING	SW. RF 125AARH				WN. THICKNESS TO MATCH PIPE THICKNESS,RF 125AARH												
	DIMENSION STD.	B16.5																
BLIND FLANGE	MATERIAL AND GRADE	ASTM A 105				ASTM A 105 (CHARPY)												
	FLANGE FACING	RF 125AARH																
	DIMENSION STD.	B16.5																
BLANK	MATERIAL AND GRADE	ASTM A 105				ASTM A 105 (CHARPY)												
	FLANGE FACING	FF 125AARH																
	DIMENSION STD.	B16.48																
	TYPE	FIG.8 FLANGE									SPACER & BLIND							
BOLTING	STUD BOLTS (FULLY THREADED)	A 193 GR B7, B–18.2																
	NUTS (HEAVY HEXAGONAL)	A 194 GR 2H, B–18.2																
GASKET	TYPE ,MATERIAL AND Dmn. STD.	SPIRAL 300# , SP.WND SS316+GRAPHITE FILLED, B–16.20–ANSI B16.5,																
ELBOW–90 ELBOW–45	MATERIAL	ASTM A 105				ASTM A 234 GR.WPB (CHARPY)												
	END DETAIL	SW,6000#		SW,3000#		BW, 1.5D												
	DIMENSION STD.	B–16.11				B–16.9												
T–EQUAL T–RED	MATERIAL	ASTM A 105				ASTM A 234 GR.WPB (CHARPY)												
	END DETAIL	SW,6000#		SW,3000#		BW, THICKNESS TO MATCH PIPE THICKNESS												
	DIMENSION STD.	B–16.11				B–16.9												
CAP	MATERIAL	ASTM A 105				ASTM A 234 GR.WPB (CHARPY)												
	END DETAIL	SCRF6000#		SCRF3000#		BW,THICKNESS TO MATCH PIPE THICKNESS												
	DIMENSION STD.	B–16.11				B–16.9												
FITTING	MATERIAL	ASTM A 105				ASTM A 234 GR.WPB (CHARPY)												
	END DETAIL	SW,6000#		SW,3000#		BW,THICKNESS TO MATCH PIPE THICKNESS												
	DIMENSION STD.	B–16.11				B–16.9												
	TYPE	COUPLING FULL,HALF LH.,RED.				RED. CON. RED. ECC.												
O'LET	MATERIAL	ASTM A 105				ASTM A 105 (CHARPY)												
	END DETAIL	SW,6000#		SW,3000#		BW												
	DIMENSION STD.	MSS–SP97				MSS–SP97												
	TYPE	SOCKOLET				WELDOLET												

APPROVED
DRWN
DSGN KP
SUNIL KUMAR
NAME DATE CHKD DATE
SS

SECTION: OIL & GAS

NATURAL GAS PIPELINE PROJECT

PIPING MATERIAL SPECIFICATIONS 300# (B1A)

REV NO | DATE | ZONE | DESCRIPTIONS | BY | APPRD

REVISIONS

REFERENCES

DRG. NO.

SCALE : N.T.S.

APPENDIX– III

(SH. 2 OF 2)

REV 0

MECON LIMITED

मेकॉन लिमिटेड

ANSI CLASS: 300#	CORROSION ALLOWANCE: 1.5MM	TEMP °C	−45	38	50	80	100	120	150
		PRESS. KG/CM^{2}g	48.95	48.95	48.44	46.72	46.19	45.54	44.76
SERVICE : RLNG		BASE MATERIAL: CARBON STEEL (MATERIAL GROUP 1.3)							

NOTES: −

1. ALL VENTS & DRAIN SHALL BE PROVIDED WITH PLUG VALVE UNLESS MENTIONED OTHERWISE IN P&IDs.
2. FITTINGS SHALL BE OF SEAMLESS CONSTRUCTION UP TO 16" AND SHALL BE OF WELDED CONSTRUCTION 18" AND ABOVE.
3. WALL THICKNESS FOR LINEPIPE USED IN VARIOUS SECTIONS SHALL BE AS PER TABLE−1 OF PMS.
4. BALL VALVE TO BE USED IN MAINLINE SHALL HAVE BUTT WELDED ENDS EXCEPT FOR THE VALVES USED FOR HOT TAPPING WHICH SHALL BE ONE SIDE BUTT WELDED AND OTHER SIDE FLANGED.
5. PROCUREMENT OF MATERIALS SHALL BE AS PER DETAILED RELEVANT SPECIFICATIONS.
6. PRESSURE−TEMPERATURE RATING INDICATED ARE FOR FLANGES ONLY IN ACCORDANCE WITH ANSI B 16.5
7. FOR VALVES,STEELPIPE AND ASSOCIATED STEEL COMPONENTS OF 2" & LARGER NOTCH TOUGHNESS PROPERTIES SHALL BE AS SPECIFIED. IN RELEVANT SPECIFICATIONS/CODES, MECON'S STANDARD TECHNICAL SPECIFICATIONS AND DATA SHEETS ETC.
8. AT STATIONS, BRANCH CONNECTIONS SHALL BE AS PER BRANCH CONNECTION TABLE BELOW
9. ALL BUTT WELDS SHALL BE 100% RADIOGRAPHED.
10. 100% OF SOCKET WELD SHALL BE SUBJECTED TO MPI/DPT.
11. PRESSURE−TEMPERATURE RATING OF VALVE BODY SHALL BE AS PER API 6D.
12. PIPELINE DESIGN CODE − ASME B 31.8 & OISD 226.
13. FOR PIPELINE SPECIALITY ITEMS (SCRAPPER TRAP, FLOW TEE, IJ, LR BENDS ETC.) AND THEIR MATERIAL DESCRIPTIONS REFER DATA SHEET OF RESPECTIVE ITEMS.
14. DESIGN PRESSURE &TEMP. FOR PIPELINE AND RELATED FACILITIES ARE 49 KG/cm^{2}g &(−45° TO +65° C)

RESPECTIVELY

STATION PIPING MATERIAL SPECIFICATION

ITEM	SIZE	DESCRIPTION
MAINTENANCE JOINTS	ALL	FLGD., BUT TO BE KEPT MINIMUM
PIPE JOINTS	1.5" & BELOW	SOCKET WELD
	2" & ABOVE	BUTT WELDED
DRAINS	ON LINES ≤ 1.5"	3/4", AS PER MEC/SD/05/21/15/03
	ON LINES ≥ 2"	3/4" OR AS PER P&ID, MEC/SD/05/21/15/01
VENTS	ON LINES ≤ 1.5"	3/4", AS PER MEC/SD/05/21/15/03
	ON LINES ≥ 2"	3/4" OR AS PER P&ID, MEC/SD/05/21/15/01
TEMP. CONN.	1.5"	FLGD. INSTL. AS PER MEC/SD/05/21/15/02
PRESS CONN.	3/4"	NIPPLE WITH BALL VALVE TO SPEC. INSTALLATION AS PER MEC/SD/05/21/15/05

BRANCH CONNECTIONS

E	TEES BW
H	H. COUPLING
P	PIPE TO PIPE
R	REINFORCED
S	SOCKETLETS
T	TEES SW/
W	WELDOLETS
D	TEE WITH RED.

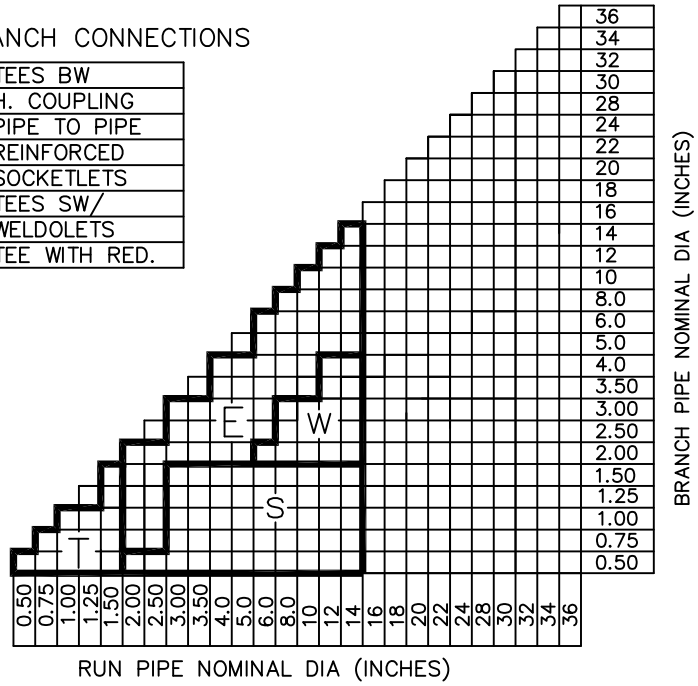

APPROVED | DRWN | DSGN KP | CHKD SS | SUNIL KUMAR

SECTION: OIL & GAS

NATURAL GAS PIPELINE PROJECT

PIPING MATERIAL SPECIFICATIONS 300# (B4A)

APPENDIX−IV

SCALE : N.T.S.

(SH. 1 OF 2)

REV 0

मेकॉन लिमिटेड

MECON LIMITED

REVISIONS | REV NO | DATE | ZONE | DESCRIPTIONS | BY | APPRD

REFERENCES

DRG. NO.

PIPELINE/PIPING DESIGN CODE		ASME B 31.8/ OISD 226										DESIGN FACTOR – 0.5							
ITEM	NOMINAL DIAMETER (INCHES)	0.50	0.75	1.00	1.50	2.00	3.00	4.00	6.00	8.00	10.0	12.0	14.0	16.0	18.0	20.0	22.0	24.0	
PIPE	WALL THICKNESS (MM/SCH)	S160	S160	XS	XS	XS	STD	STD	STD	STD	STD	S40	S40	S30	S30	S30	S30	S30	
	MATERIAL	ASTM A333 GR.6																	
	DIMENSION STD.	B36.10																	
	METHOD OF MANUFACTURE, ENDS	SEAMLESS PE				SEAMLESS BE								BE, SAW					
FLANGE	MATERIAL AND GRADE	ASTM A 350 GR. LF2, CL–I																	
	TYPE, FLANGE FACING	SW. RF 125AARH				WN. THICKNESS TO MATCH PIPE THICKNESS, RF 125AARH													
	DIMENSION STD.	B16.5																	
BLIND FLANGE	MATERIAL AND GRADE	ASTM A 350 GR. LF2, CL–I																	
	FLANGE FACING	RF 125AARH																	
	DIMENSION STD.	B16.5																	
BLANK	MATERIAL AND GRADE	ASTM A 350 GR. LF2, CL–I																	
	FLANGE FACING	FF 125AARH																	
	DIMENSION STD.	B16.48																	
	TYPE	FIG.8 FLANGE												SPACER BLIND					
BOLTING	STUD BOLTS (FULLY THREADED)	A 320 GR L7, B–18.2																	
	NUTS (HEAVY HEXAGONAL)	A 194 GR 4, B–18.2																	
GASKET	TYPE, MATERIAL AND Dmn. STD.	SPIRAL, SP.WND SS316+GRAPHITE FILLED, B–16.20–ANSI B16.5,																	
ELBOW–90 ELBOW–45	MATERIAL	ASTM A350 GR.LF2				ASTM A 420 GR.WPL6								ASTM A 420 GR.WPL6W					
	END DETAIL	SW,6000#		SW,3000#		BW, 1.5D													
	DIMENSION STD.	B–16.11				B–16.9													
T–EQUAL T–RED	MATERIAL	ASTM A350 GR.LF2				ASTM A 420 GR.WPL6								ASTM A 420 GR.WPL6W					
	END DETAIL	SW,6000#		SW,3000#		BW													
	DIMENSION STD.	B–16.11				B–16.9													
CAP & PLUG (UPTO 1.5")	MATERIAL	ASTM A350 GR.LF2				ASTM A 420 GR.WPL6								ASTM A 420 GR.WPL6W					
	END DETAIL	SCRF6000		SCRF3000		BW, THK TO MATCH PIPE THICKNESS													
	DIMENSION STD.	B–16.11				B–16.9													
FITTING	MATERIAL	ASTM A350 GR.LF2				ASTM A 420 GR.WPL6								ASTM A 420 GR.WPL6W					
	END DETAIL	SW–6000		SW–3000		BW, THICKNESS TO MATCH PIPE THICKNESS													
	DIMENSION STD.	B–16.11				B–16.9													
	TYPE	COUPLING FULL,HALF LH.,RED.				RED. CON. RED. ECC.													
O'LET	MATERIAL	ASTM A350 GR.LF2																	
	END DETAIL	SW,6000#		SW,3000#		BW													
	DIMENSION STD.	MSS–SP97				MSS–SP97													
	TYPE	SOCKOLET				WELDOLET													

APPROVED
DRWN
DSGN KP
SUNIL KUMAR

	NAME	DATE
CHKD	SS	
		DATE

SECTION: OIL & GAS

REV NO | DATE | ZONE | DESCRIPTIONS | BY | APPRD

REVISIONS

REFERENCES

NATURAL GAS PIPELINE PROJECT

PIPING MATERIAL SPECIFICATIONS
300# (B4A)

SCALE : N.T.S.

APPENDIX–IV

(SH. 2 OF 2)

DRG. NO.

REV 0

मेकॉन लिमिटेड

MECON LIMITED

ANSI CLASS: 600 #	CORROSION ALLOWANCE: 1.5 MM	TEMP °C	−29.0	38.0	50	100	150	200	250
		PRESS. KG/CM^{2}g	104.14	104.14	102.2	95.04	91.97	89.35	85.07
SERVICE : NATURAL GAS		BASE MATERIAL: CARBON STEEL (MATERIAL GROUP 1.1)							

NOTES: –

1. ALL VENTS & DRAIN SHALL BE PROVIDED WITH PLUG VALVE UNLESS MENTIONED OTHERWISE IN P&IDs.
2. FITTINGS SHALL BE OF SEAMLESS CONSTRUCTION UP TO 16" AND SHALL BE OF WELDED CONSTRUCTION 18" AND ABOVE.
3. WALL THICKNESS FOR LINEPIPE USED IN VARIOUS SECTIONS SHALL BE AS PER TABLE–1 OF PMS.
4. BALL VALVE TO BE USED IN MAINLINE SHALL HAVE BUTT WELDED ENDS EXCEPT FOR THE VALVES USED FOR HOT TAPPING WHICH SHALL BE ONE SIDE BUTT WELDED AND OTHER SIDE FLANGED.
5. PROCUREMENT OF MATERIALS SHALL BE AS PER DETAILED RELEVANT SPECIFICATIONS.
6. DESIGN PRESSURE & TEMP. FOR PIPELINE AND RELATED FACILITIES ARE 92 Kg/Cm^{2}g & (−29° TO +65°C) RESPECTIVELY.
7. PRESSURE–TEMPERATURE RATING INDICATED ARE FOR FLANGES ONLY IN ACCORDANCE WITH ANSI B 16.5
8. FOR VALVES,STEELPIPE AND ASSOCIATED STEEL COMPONENTS OF 2" AND LARGER NOTCH TOUGHNESS PROPERTIES SHALL BE AS SPECIFIED IN RELEVANT SPECIFICATIONS/CODES, MECON'S STANDARD TECHNICAL SPECIFICATIONS AND DATA SHEETS ETC.
9. AT STATIONS, BRANCH CONNECTIONS SHALL BE AS PER BRANCH CONNECTION TABLE BELOW.
10. ALL BUTT WELDS SHALL BE 100% RADIOGRAPHED.
11. 100% OF SOCKET WELD SHALL BE SUBJECTED TO MPI/DPT.
12. PRESSURE–TEMPERATURE RATING OF VALVE BODY SHALL BE AS PER API 6D.
13. PIPELINE DESIGN CODE – ASME B 31.8 & OISD 226.
14. FOR PIPELINE SPECIALITY ITEMS (SCRAPPER TRAP, BARRED TEE, IJ, LR BENDS ETC.) AND THEIR MATERIAL DESCRIPTIONS REFER DATA SHEET OF RESPECTIVE ITEMS.

STATION PIPING MATERIAL SPECIFICATION

ITEM	SIZE	DESCRIPTION
MAINTENANCE JOINTS	ALL	FLGD., BUT TO BE KEPT MINIMUM
PIPE JOINTS	1.5" & BELOW	SOCKET WELD
	2" & ABOVE	BUTT WELDED
DRAINS	ON LINES ≤ 1.5"	3/4", AS PER MEC/SD/05/21/15/03
	ON LINES ≥ 2"	3/4" OR AS PER P&ID, MEC/SD/05/21/15/01
VENTS	ON LINES ≤ 1.5"	3/4", AS PER MEC/SD/05/21/15/03
	ON LINES ≥ 2"	3/4" OR AS PER P&ID, MEC/SD/05/21/15/01
TEMP. CONN.	1.5"	FLGD. INSTL. AS PER MEC/SD/05/21/15/02
PRESS CONN.	3/4"	SCH. 160 NIPPLE WITH BALL VALVE TO SPEC. INSTALLATION AS PER MEC/SD/05/21/15/05

BRANCH CONNECTIONS

E	TEES BW
H	H. COUPLING
P	PIPE TO PIPE
R	REINFORCED
S	SOCKETLETS
T	TEES SW/
W	WELDOLETS
D	TEE WITH RED.

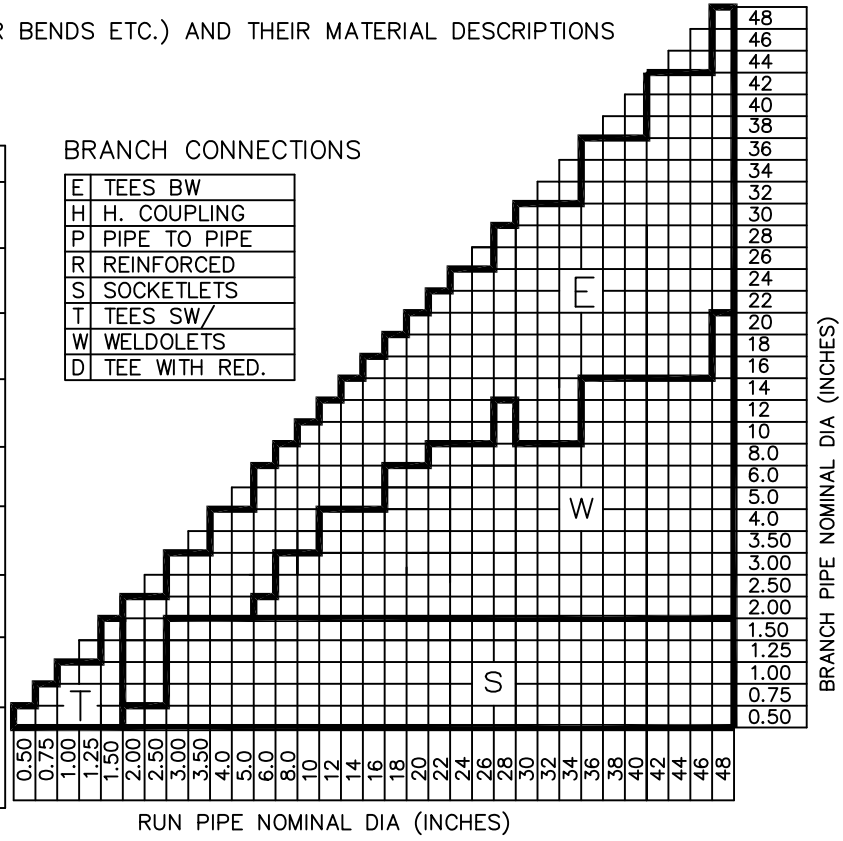

APPROVED | DRWN | DSGN KP | CHKD SS | SUNIL KUMAR

SECTION: OIL & GAS

REVISIONS: REV NO | DATE | ZONE | DESCRIPTIONS | BY | APPRD | REFERENCES | DRG. NO.

NATURAL GAS PIPELINE PROJECT

PIPING MATERIAL SPECIFICATIONS 600# (D1A)

SCALE : N.T.S.

APPENDIX–V (SH. 1 OF 2)

REV 0

MECON LIMITED

मेकॉन लिमिटेड

PIPELINE/PIPING DESIGN CODE		ASME B 31.8/ OISD 226									DESIGN FACTOR – 0.5									
ITEM	NOMINAL DIAMETER (INCHES)	0.50	0.75	1.00	1.50	2.00	3.00	4.00	6.00	8.00	10.0	12.0	14.0	16.0	18.0	20.0	24.0	28.0	30.0	
PIPE	WALL THICKNESS (MM/SCH)	S160	S160	S80	S80	S80	XS	XS	XS	14.3	XS	S60	14.3	17.5	S60	S60	19.1	22.2	23.8	
	MATERIAL	ASTM A106 GR.B				ASTM A106 GR.B (CHARPY)				API 5L GR.B PSL2	API 5L GR.X–52 PSL2									
	DIMENSION STD.	B36.10								API 5L										
	METHOD OF MANUFACTURE, ENDS	SEAMLESS PE				SEAMLESS BE					BE SAW									
FLANGE	MATERIAL AND GRADE	ASTM A 105				ASTM A 105 (CHARPY)					ASTM A 694 GR.F–52 (CHARPY)									
	TYPE, FLANGE FACING	SW. RF 125AARH				WN. THICKNESS TO MATCH PIPE THICKNESS,RF 125AARH														
	DIMENSION STD.	B16.5									B 16.47A									
BLIND FLANGE	MATERIAL AND GRADE	ASTM A 105				ASTM A 105 (CHARPY)														
	FLANGE FACING	RF 125AARH																		
	DIMENSION STD.	B16.5									B 16.47A									
BLANK	MATERIAL AND GRADE	ASTM A 105				ASTM A 105 (CHARPY)					ASTM A 516 GR.–70									
	FLANGE FACING	FF 125AARH																		
	DIMENSION STD.	B16.48									MNF' STD									
	TYPE	FIG.8 FLANGE									SPACER & BLIND									
BOLTING	STUD BOLTS (FULLY THREADED)	A 193 GR B7, B–18.2																		
	NUTS (HEAVY HEXAGONAL)	A 194 GR 2H, B–18.2																		
GASKET	TYPE ,MATERIAL AND Dmn. STD.	SPIRAL 600# , SP.WND SS316+GRAPHITE FILLED, B–16.20–ANSI B16.5,																		
ELBOW–90 ELBOW–45	MATERIAL	ASTM A 105				ASTM A 234 GR.WPB (CHARPY)					MSS–SP–75 GR.W PHY–52									
	END DETAIL	SW,6000#		SW,3000#		BW, 1.5D														
	DIMENSION STD.	B–16.11				B–16.9					MSS–SP–75									
T–EQUAL T–RED	MATERIAL	ASTM A 105				ASTM A 234 GR.WPB (CHARPY)					MSS–SP–75 GR.W PHY–52									
	END DETAIL	SW,6000#		SW,3000#		BW														
	DIMENSION STD.	B–16.11				B–16.9					MSS–SP–75									
CAP	MATERIAL	ASTM A 105				ASTM A 234 GR.WPB (CHARPY)					MSS–SP–75 GR.W PHY–52									
	END DETAIL	SCRF6000		SCRF3000		BW,THICKNESS TO MATCH PIPE THICKNESS														
	DIMENSION STD.	B–16.11				B–16.9					MSS–SP–75									
FITTING	MATERIAL	ASTM A 105				ASTM A 234 GR.WPB (CHARPY)					MSS–SP–75 GR.W PHY–52									
	END DETAIL	SW–6000#		SW–3000#		BW,THICKNESS TO MATCH PIPE THICKNESS														
	DIMENSION STD.	B–16.11				B–16.9					MSS–SP–75									
	TYPE	COUPLING FULL,HALF LH.,RED.				RED. CON. RED. ECC.														
O'LET	MATERIAL	ASTM A 105				ASTM A 105 (CHARPY)					ASTM A 694 GR.F–52 (CHARPY)									
	END DETAIL	SW,6000#		SW,3000#		BW					BW									
	DIMENSION STD.	MSS–SP97				MSS–SP97					MSS–SP97									
	TYPE	SOCKOLET				WELDOLET					WELDOLET									

APPROVED
DRWN
DSGN KP
NAME
DATE
CHKD SS
DATE
SUNIL KUMAR

SECTION: OIL & GAS

REVISIONS
REV NO | DATE | ZONE | DESCRIPTIONS | BY | APPRD

REFERENCES

DRG. NO.

NATURAL GAS PIPELINE PROJECT

PIPING MATERIAL SPECIFICATIONS
600# (D1A)

SCALE : N.T.S.

APPENDIX–V (SH. 2 OF 2)

REV 0

MECON LIMITED

मेकॉन लिमिटेड

ANSI CLASS: 600#	CORROSION ALLOWANCE: 1.5MM	TEMP °C	−45	38	50	100	150	200	
		PRESS. KG/CM^2 g	97.89	97.89	96.77	92.48	89.63	87.02	
SERVICE : RLNG		BASE MATERIAL: CARBON STEEL (MATERIAL GROUP 1.3)							

NOTES: –

1. ALL VENTS & DRAIN SHALL BE PROVIDED WITH PLUG VALVE UNLESS MENTIONED OTHERWISE IN P&IDs.
2. FITTINGS SHALL BE OF SEAMLESS CONSTRUCTION UP TO 16" AND SHALL BE OF WELDED CONSTRUCTION 18" AND ABOVE.
3. WALL THICKNESS FOR LINEPIPE USED IN VARIOUS SECTIONS SHALL BE AS PER TABLE–1 OF PMS.
4. BALL VALVE TO BE USED IN MAINLINE SHALL HAVE BUTT WELDED ENDS EXCEPT FOR THE VALVES USED FOR HOT TAPPING WHICH SHALL BE ONE SIDE BUTT WELDED AND OTHER SIDE FLANGED.
5. PROCUREMENT OF MATERIALS SHALL BE AS PER DETAILED RELEVANT SPECIFICATIONS.
6. DESIGN PRESSURE & TEMP. FOR PIPELINE AND RELATED FACILITIES ARE 92 Kg/cm² g & (−45° TO +65°C) RESPECTIVELY.
7. PRESSURE–TEMPERATURE RATING INDICATED ARE FOR FLANGES ONLY IN ACCORDANCE WITH ANSI B 16.5
8. FOR VALVES,STEELPIPE AND ASSOCIATED STEEL COMPONENTS OF 2" AND LARGER NOTCH TOUGHNESS PROPERTIES SHALL BE AS SPECIFIED IN RELEVANT SPECIFICATIONS/CODES, MECON'S STANDARD TECHNICAL SPECIFICATIONS AND DATA SHEETS ETC.
9. AT STATIONS, BRANCH CONNECTIONS SHALL BE AS PER BRANCH CONNECTION TABLE BELOW
10. ALL BUTT WELDS SHALL BE 100% RADIOGRAPHED.
11. 100% OF SOCKET WELD SHALL BE SUBJECTED TO MPI/DPT.
12. PRESSURE–TEMPERATURE RATING OF VALVE BODY SHALL BE AS PER API 6D.
13. PIPELINE DESIGN CODE – ASME B 31.8 & OISD 226.
14. FOR PIPELINE SPECIALITY ITEMS (SCRAPPER TRAP, FLOW TEE, IJ, LR BENDS ETC.) AND THEIR MATERIAL DESCRIPTIONS REFER DATA SHEET OF RESPECTIVE ITEMS.

STATION PIPING MATERIAL SPECIFICATION

ITEM	SIZE	DESCRIPTION
MAINTENANCE JOINTS	ALL	FLGD., BUT TO BE KEPT MINIMUM
PIPE JOINTS	1.5" & BELOW	SOCKET WELD
	2" & ABOVE	BUTT WELDED
DRAINS	ON LINES ≤ 1.5"	3/4", AS PER MEC/SD/05/21/15/03
	ON LINES ≥ 2"	3/4" OR AS PER P&ID, MEC/SD/05/21/15/01
VENTS	ON LINES ≤ 1.5"	3/4", AS PER MEC/SD/05/21/15/03
	ON LINES ≥ 2"	3/4" OR AS PER P&ID, MEC/SD/05/21/15/01
TEMP. CONN.	1.5"	FLGD. INSTL. AS PER MEC/SD/05/21/15/02
PRESS CONN.	3/4"	NIPPLE WITH BALL VALVE TO SPEC. INSTALLATION AS PER MEC/SD/05/21/15/05

BRANCH CONNECTIONS

E	TEES BW
H	H. COUPLING
P	PIPE TO PIPE
R	REINFORCED
S	SOCKETLETS
T	TEES SW/
W	WELDOLETS
D	TEE WITH RED.

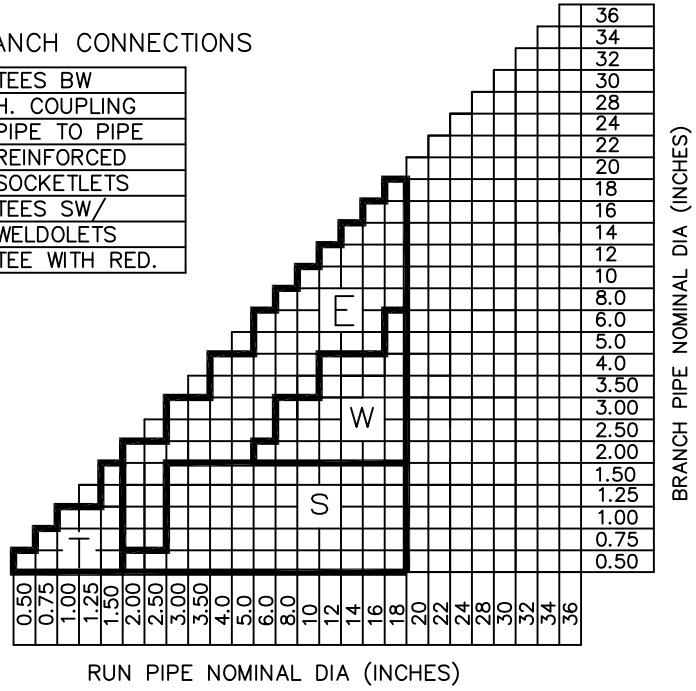

APPROVED | DRWN | DSGN KP | CHKD SS | SUNIL KUMAR

SECTION: OIL & GAS

NATURAL GAS PIPELINE PROJECT

PIPING MATERIAL SPECIFICATIONS 600# (D4A)

APPENDIX–VI

SCALE : N.T.S.

(SH. 1 OF 2)

REV 0

मेकॉन लिमिटेड

MECON LIMITED

REVISIONS: REV NO | DATE | ZONE | DESCRIPTIONS | BY | APPRD

REFERENCES

DRG. NO.

PIPELINE/PIPING DESIGN CODE		ASME B 31.8/ OISD 226									DESIGN FACTOR – 0.5								
ITEM	NOMINAL DIAMETER (INCHES)	0.50	0.75	1.00	1.50	2.00	3.00	4.00	6.00	8.00	10.0	12.0	14.0	16.0	18.0	20.0	22.0	24.0	
PIPE	WALL THICKNESS (MM/SCH)	S160	S160	XS	XS	XS	STD	XS	XS	XS	XS	19.0	20.6	22.2	25.4	22.2	25.4	26.3	
	MATERIAL	ASTM A333 GR.6																	
	DIMENSION STD.	B36.10																	
	METHOD OF MANUFACTURE, ENDS	SEAMLESS PE				SEAMLESS BE								BE SAW					
FLANGE	MATERIAL AND GRADE	ASTM A 350 GR. LF2, CL–I																	
	TYPE, FLANGE FACING	SW. RF 125AARH				WN. THICKNESS TO MATCH PIPE THICKNESS, RF 125AARH													
	DIMENSION STD.	B16.5																	
BLIND FLANGE	MATERIAL AND GRADE	ASTM A 350 GR. LF2, CL–I																	
	FLANGE FACING	RF 125AARH																	
	DIMENSION STD.	B16.5																	
BLANK	MATERIAL AND GRADE	ASTM A 350 GR. LF2, CL–I																	
	FLANGE FACING	FF 125AARH																	
	DIMENSION STD.	B16.48																	
	TYPE	FIG.8 FLANGE									SPACER & BLIND								
BOLTING	STUD BOLTS (FULLY THREADED)	A 320 GR L7, B–18.2																	
	NUTS (HEAVY HEXAGONAL)	A 194 GR 4, B–18.2																	
GASKET	TYPE, MATERIAL AND Dmn. STD.	SPIRAL, SP.WND SS316+GRAPHITE FILLED, B–16.20–ANSI B16.5,																	
ELBOW–90 ELBOW–45	MATERIAL	ASTM A350 GR.LF2				ASTM A 420 GR.WPL6								A 420 GR.WPL6.W					
	END DETAIL	SW,6000#		SW,3000#		BW, 1.5D													
	DIMENSION STD.	B–16.11				B–16.9													
T–EQUAL T–RED	MATERIAL	ASTM A350 GR.LF2				ASTM A 420 GR.WPL6								ASTM A 420 GR.WPL6.W					
	END DETAIL	SW,6000#		SW,3000#		BW													
	DIMENSION STD.	B–16.11				B–16.9													
CAP & PLUG (UPTO 1.5")	MATERIAL	ASTM A350 GR.LF2				ASTM A 420 GR.WPL6													
	END DETAIL	SCRF6000		SCRF3000		BW, THK TO MATCH PIPE THICKNESS													
	DIMENSION STD.	B–16.11				B–16.9													
FITTING	MATERIAL	ASTM A350 GR.LF2				ASTM A 420 GR.WPL6								ASTM A 420 GR.WPL6.W					
	END DETAIL	SW–6000		SW–3000		BW, THICKNESS TO MATCH PIPE THICKNESS													
	DIMENSION STD.	B–16.11				B–16.9													
	TYPE	COUPLING FULL,HALF LH.,RED.				RED. CON. RED. ECC.													
O'LET	MATERIAL	ASTM A350 GR.LF2																	
	END DETAIL	SW,6000#		SW,3000#		BW													
	DIMENSION STD.	MSS–SP97				MSS–SP97													
	TYPE	SOCKOLET				WELDOLET													

APPROVED

DRWN

DSGN KP

SUNIL KUMAR

NAME DATE CHKD SS DATE

SECTION: OIL & GAS

NATURAL GAS PIPELINE PROJECT

PIPING MATERIAL SPECIFICATIONS 600# (D4A)

APPENDIX–VI

SCALE : N.T.S.

(SH. 2 OF 2)

REV 0

MECON LIMITED

मेकॉन लिमिटेड

REVISIONS

REV NO | DATE | ZONE | DESCRIPTIONS | BY | APPRD

REFERENCES

DRG. NO.

TECHNICAL SPECIFICATION
FOR
PRE-COMMISSIONING AND COMMISSIONING

TS NO.: MEC/05/28/M/000/1093

(OIL & GAS SBU)
MECON LIMITED
DELHI 110 092

MECON LIMITED REGD. OFF: RANCHI 834002	TECHNICAL SPECIFICATION FOR PRE-COMMISSIONING AND COMMISSIONING TS NO.: MEC/05/28/M/000/1093	

C O N T E N T S

SL. NO.	DESCRIPTION
1.0	INTRODUCTION
2.0	RESPONSIBILITY OF CONTRACTOR
3.0	SCOPE OF WORK
4.0	DOCUMENTATION
5.0	SPARES AND CONSUMABLES
6.0	SAFETY

ANNEXURE – I : FORMAT FOR BIODATA OF KEY PERSONNEL FOR COMMISSIONING

ANNEXURE – II : QUESTIONNAIRE

ANNEXURE – III : FORMAT TO BE USED DURING PRE-COMMISSIONING AND COMMISSIONING (TOTAL 5 FORMATS)

F O R M A T – I : INTIMATION REGARDING SYSTEM COMPLETION

F O R M A T - II : CHECKLIST

F O R M A T - III : READY FOR PRE-COMMISSIONING CERTIFICATE

F O R M A T – IV : READY FOR COMMISSIONING CERTIFICATE

F O R M A T - V : COMPLETION OF COMMISSIONING CERTIFICATE

1.0 INTRODUCTION

This specification covers the minimum technical requirements for:

i) Pre-commissioning activities consists of:

- Carrying out pre-commissioning checks of the underground pipeline system including above ground piping at dispatch station and at receipt stations, Sectionalizing Valve (SV) stations and tap-off / hook-up piping.
- Dewatering of the pipeline.
- Flushing and dry air blowing of underground & above ground piping at dispatch and receipt stations, SV stations and tap-off/ hook–up point.
- Swabbing of pipeline.
- Preparation of detailed commissioning procedures

ii) Commissioning activities consisting of Drying, Inertisation, Gas-in/ Commissioning, stabilization and 72 hours run of all the pipe lines and facilities mentioned in (i).

Bidder, along with his bid documents, is required to submit the following:

- Execution plan and method statement for pre-commissioning and commissioning activities.
- Past experience of pre-commissioning and commissioning activities carried out for a similar pipeline system / network.
- Plan to engage an agency / subcontractor for these activities (if envisaged).
- Organization charts of bidder's proposed pre-commissioning and commissioning team indicating the positions with the required qualifications and experience.
- Bio datas of Key personnel comprising the commissioning team along with their contact nos. In case the member of commissioning team as mentioned in the offer is not available at the actual time of commissioning then the contractor shall ensure a replacement with equivalent qualification & experience. The format of bio data is enclosed as **Annexure-I**.
- Clause wise list of deviations, if any, from this technical specification. In the absence of this, it shall be considered that the bidder has no deviation.
- Questionnaire as given in **Annexure-II**.

2.0 RESPONSIBILITY OF CONTRACTOR

The contractor shall be responsible for all the pre-commissioning and commissioning activities that need to be carried out for the pipeline system.

2.1 Pre-commissioning

In order to execute and perform pre-commissioning activities, the contractor shall be responsible for (but not limited to):

- Carrying out pre-commissioning checks of the underground pipeline system including above ground piping at dispatch station and at receipt stations, Sectionalizing Valve (SV) stations and tap-off / hook-up piping.
- Dewatering of the pipeline.
- Flushing and dry air blowing of underground & above ground piping at dispatch and receipt stations, SV stations and hook–up point.
- Swabbing of pipeline.
- Low pressure leak check (with air) for the aboveground section of the pipelines.
- Supply and supervision of manpower for pre-commissioning.
- Supply and operation of machinery & equipment for pre-commissioning.
- Supply and use of materials and consumables as required for the pre-commissioning activities.
- Design and supply all temporary line connections, pig launcher/receiver, valves, instruments, manpower etc. as required during various operations.
- Preparation of detailed pre-commissioning procedures, activity schedules, bar charts, schemes etc. This shall include preparation of detailed procedures for dewatering, flushing, swabbing and low pressure leak check and shall address the sequence and methodology describing all operations, data on materials, equipment, instruments, consumables, communication systems, necessary calculations, detailed time schedule and organization chart.
- All necessary work to perform the job successfully including all modifications that would be required.

The contractor shall demonstrate to the COMPANY (for COMPANY's approval) the successful completion of all of the above-mentioned activities.

In the event of any detail, which is not fully addressed, contractor should warrant that work shall be performed in accordance with the relevant codes, Company's specifications and the best recognized Engineering guidelines and practices being followed in the on-shore pipeline industry.

2.2 Drying, Inertisation, Gas-in / Commissioning, stabilization and 72 hours run

In order to execute and perform commissioning related activities, the contractor shall be responsible for (but not limited to):

- Drying of the underground pipeline and above ground piping system at dispatch and receipt stations, above ground piping system at SV stations and hook-up / tap-off points to a water dew point of –8 °C at atmospheric pressure, and maintain this dew point in the pipeline, till inertisation and gas-in activities commence.

- Commissioning checks including Safety review prior to start of commissioning activities to achieve 'Ready for commissioning' status for underground pipeline and above ground piping system at dispatch and receipt stations, above ground piping system at SV stations and hook-up / tap-off points.
- Inertisation of the pipeline system including above ground piping system at dispatch and receipt stations, above ground piping system at SV stations and hook-up / tap-off points.
- Gas-in activities including pressurization, carrying out high pressure leak checks and establishment of flows in the pipeline system including above ground piping at dispatch and receipt stations, SV stations, IP station and hook-up points.
- Stabilization and 72 hours run of the pipeline system.
- Supply and supervision of manpower for commissioning.
- Supply and operation of machinery & equipment for commissioning.
- Supply and use of materials and consumables as required for the commissioning activities.
- Design and supply all temporary line connections, pig launcher/receiver, valves, instruments, manpower etc. as required during various operations.
- Preparation of detailed commissioning procedures, activity schedules, bar charts, schemes etc. This shall include preparation of detailed procedures for drying, inertisation, gas-in / commissioning operations, high pressure leak check operations, pressurization, establishing flows and 72 hours run of the pipeline system, and shall address the sequence and methodology describing all operations, data on materials, equipment, instruments, consumables, communication systems, necessary calculations, detailed time schedule and organization chart.
- Ensuring all communication facilities are in place and in proper working condition prior to start of commissioning activities of the pipeline system.
- All necessary work to perform the job successfully including all modifications that

would be required.

The contractor shall demonstrate to the COMPANY (for COMPANY's approval) the successful completion of all of the above-mentioned activities.

In the event of any detail, which is not fully addressed, contractor should warrant that work shall be performed in accordance with the relevant codes, Company's specifications and the best recognized Engineering guidelines and practices being followed in the on-shore pipeline industry.

2.3 Mechanical Completion

Mechanical Completion of system shall mean completion of underground / aboveground pipeline system and station work including pre-commissioning along with ECP of U/G pipeline and make the system ready to start commissioning activities.

3.0 SCOPE OF WORK

The work to be performed by the Contractor as part of the pre-commissioning activities for the facilities outlined in paragraphs (i) of Section-1.0 above and commissioning related activities for the facilities outlined in paragraphs (ii) of Section-1.0 above shall consist of the following:

3.1 Pre-commissioning activities

3.1.1 Pre-commissioning checks

Pre-commissioning checks shall be carried out for the pipeline system to ascertain that the pipeline system has been mechanically completed in all respects. These checks shall cover the pipelines including distribution network system, dispatch and receipt stations, I.P. stations, sectionalizing valve stations and the hook up points. The pre-commissioning checks shall include the following:

A) System Checks

The entire facilities shall be checked against the latest P&ID's, Engineering and Vendor drawings / documents and other design specifications. Any shortcomings observed shall be listed down in the form of punch lists and duly attended.

B) Checking of Field Instruments

All the field instruments like actuated valves, control valves, shutdown valves, transmitters, solenoid valves, shut down switches, alarms etc. shall be checked physically and also for their intended application by simulating the operating condition. It will also include checking of Different meters, gauges, action of

actuated valves, control valves, shutdown valves etc.

C) Survey of the Pipelines

This shall be performed to confirm that proper fittings/supports, cathodic protection system, route markets, warning signs, fencing around SV stations, crash barriers etc. have been installed along the pipeline.

D) Checking of Communication System

This is to check that there is proper communication with adequate back up power to ensure uninterrupted communication.

E) Checking of Electrical Distribution System

This is to ensure safety and also to ensure an uninterrupted power supply during startup and normal pipeline operation.

F) Checking of Instruments, Controls & Interlocks

This is to check that instrument controls and interlocks are functional as per the normal operating conditions.

G) Checking of Utilities

This is to check that utilities like power, nitrogen, UPS system, instrument air, etc. are available prior to start-up.

H) Any other checks as may be considered necessary.

3.1.2 Dewatering

3.1.2.1 General

Dewatering of a pipeline section shall be done subsequent to the hydro-test of the respective pipeline section. During the dewatering operation, the major quantity of hydro-test water shall be removed from the pipelines and distribution network. It is the responsibility of the contractor to develop suitable dewatering procedure and submit the same for Company's approval.

The disposal of the water shall be performed such that no harm is done to the environment and the Dewatering procedure should indicate this disposal methodology.

3.1.2.2 Operational requirements

The dewatering operation for the pipelines shall consist of a number of dewatering pig runs and dry air shall be used as propellant for pig trains.

Cup pigs shall be used and will be suitable for traversing the entire length of the pipelines / pipe segments being dewatered. Contractor shall ensure that all the pigs are designed to prevent damage to the pipeline's internal coating (if any).

The contractor shall propose the minimum speed and the backpressure of the pigs in order that continuous operation will be performed without the pig getting stuck. Contractor shall submit all the calculations regarding this procedure and a contingency plan for implementation in case the pigs get stuck.

Contractor shall provide a suitable compressor for oil-free air with sufficient capacity and pressure.

Upon arrival of the pigs at the receiving end, the Contractor in the presence of Company's representative shall remove the pigs without delay.

3.1.2.3 Flushing of aboveground piping

Flushing of above ground piping at dispatch and receipt stations, SV stations and hook-up / tap-off points shall be done with water to remove debris from within the piping and then with dry air to remove the residual amount of water from the aboveground piping.

3.1.2.4 Acceptance criteria

Before proceeding to the next stage of operations, Contractor shall ensure that bulk of the water has been removed from the pipeline system. Contractor shall specify when the dewatering phase (for the underground pipeline) and flushing and dry air blowing (for above ground piping) is finished and shall obtain approval of the company before proceeding to the next phase.

3.1.3 Swabbing

3.1.3.1 General

The swabbing operation, which shall be done subsequent to the dewatering operation, is meant to reduce the remaining water in the pipeline to acceptable condition and to ensure removal of free water left inside the pipeline prior to final drying, Inertisation and commissioning of the Pipeline system. This is done by driving number of foam pigs propelled by oil free compressed dry air, which can pick up free water in the pipeline. Hence for swabbing, air compressors of required capacity, after-coolers and dryers should be deployed by the contractor.

Contractor may suggest alternate methodology for Swabbing operation. The swabbing

activity is precursor for drying of the pipeline and is basically to reduce duration of drying.

The contractor shall submit the detailed procedure and the duration of the swabbing operation and obtain approval of the company before starting the operation.

3.1.3.2 Acceptance criteria

The Contractor shall ensure that swabbing operation is considered to be completed when it is considered that there is no free water left in the pipeline. This shall be subject to Company's approval.

3.1.4 Safety review prior to start of commissioning activities

A pre-startup safety review of the pipeline system including the underground pipeline and the above ground piping at dispatch and receipt stations, SV stations and hook-up / tap-of points shall be carried out by the Contractor before permitting entry of natural gas into the new pipeline facility. Company / Company's representative shall also participate in the pre-startup safety review.

3.2 Commissioning related activities

3.2.1 Drying

Before charging the line with gas, the contractor may propose to dry the pipeline either by super drying or vacuum drying or any other suitable technique as approved by Engineer-in-charge (EIC). Following specifications shall govern the drying procedures and shall be submitted for approval of the EIC.

3.2.1.1 **Vacuum Drying**

a) General

The contractor shall dry the underground pipeline and the above ground piping at dispatch and receipt stations, SV stations and hook-up / tap-off points with vacuum drying technique prior to charging natural gas.

Water vapour shall be evacuated from the pipeline by vacuum units alone or in combination with dry air or dry nitrogen vacuum purging as specified in the scope of work. The final dew point temp. of the dry pipeline shall be -8 °C, which is equivalent to a pressure of 3 mbar (absolute), unless otherwise specified in the scope of work.

Vacuum drying should consist of the following stages:

- pre-drying checks;
- one or more leak tests;
- pump-down;
- evaporation/evacuation, including vacuum purging(if applicable);
- soak test/acceptance test;

The size of the vacuum units should be sufficient to reduce the pressure in the pipeline to the vaporisation pressure during pump-down within typically 12 h to 36 h of commencement of the pump-down operation, depending on the length and diameter of the pipeline. Vacuum units having excessive capacity would draw down the pressure too rapidly, which could cause localised ice formation.

The Contractor shall prepare a theoretical pressure/ time graph each of the drying phases and submit it along with detailed work procedure for approval of PMC/CLIENT.

b) **Pre-drying checks**

Before commencement of vacuum drying the Contractor shall verify that:

- The pipeline has been isolated from other pipelines and piping by closing valves at the battery limit. As a precaution against possible “air-in” leaks through the battery limit valves, all valves immediately adjacent to the battery limit valves shall also be closed wherever possible;
- All pressure safety valves, actuator tappings etc. shall be isolated by closing the respective valves;
- All vent drain, utility connections, tapping valves shall be closed and ends shall be blind flanged;
- The blow down piping (if any) shall also be isolated by closing the respective valves;
- The bypass piping across the mainline valves at SV stations shall be isolated by closing all the by-pass valves;
- valves are designed for vacuum drying and have been placed in to the half open position;
- valve body bleeder parts are vacuum tight;
- Temporary connections, pig trap valves and pig trap end closure seals are able to withstand the prevailing vacuum pressure. If this is not the case, Contractor shall provide adequate seals for the vacuum drying operation and replace these seals by the permanent seals once the vacuum drying operation has been completed.

c) Leak tests

I. Low pressure leak check of aboveground station piping

The above ground station piping including all instrument impulse tubing shall be pressurised with air to a minimum pressure of 6 kg/cm^2. All flanged threaded and tubing joints shall be checked for leaks by soap solution.

II. Leak test of pipeline

The piping connecting the vacuum unit with the pipeline, including pig trap(s) and vacuum unit(s), shall be isolated from the pipeline and the pressure in the isolated

piping lowered to slightly above the theoretical evaporation pressure.

The vacuum unit shall be switched off and the isolated piping checked for leaks by soap solution. Leaks shall be cured by flange tightening etc.

The pipeline shall then be opened to the vacuum unit(s) and the pressure in the entire system reduced to a pressure of 50 mbar (abs) to 100 mbar (abs) for the final leak test. The pressure shall be maintained at this level and all other piping, such as at the pig trap system at the other end of the pipeline if vacuum drying is carried out from one end only, shall be checked for leaks. Leaks shall be cured as stated above.

After all leaks have been cured, where possible, the vacuum unit shall be turned off and isolated from the pipeline and the pressure in the pipeline and the associated pipework monitored for at least 1 hr. Pressure increases shall be recorded and plotted on a pressure/time chart. From the measured pressure increase, the total leak rate shall calculated. Curing of leaks shall be continued until the calculated total leak rate is less than 10 % of evacuation capacity of the vacuum units at the initial leak test pressure. The final in-leak rate shall be recorded for use when analysing the final soak test results

d) **Pump-down/ pull down**

The pressure in the pipeline shall then be reduced at a steady rate to a vacuum level of 40-50 torr (53- 67 mbar). Alternatively the contractor may reduce the pressure in the pipeline further to a level where the ambient temperature of the pipeline will cause the free water to boil and then eventually to evaporate. The approximate pressure value is calculated in advance but it is easily recognized at site by a fall in the rate of pressure reduction, which is noted from the plot of pressure against time.

A significantly shorter pump down time than that theoretically predicted could indicate freezing and shall be evaluated immediately. The pressure shall be kept at this level, and pig traps and piping inspected for vacuum tightness and any leaks cured.

e) **Evaporation/ evacuation**

As the pressure in the pipeline approaches the saturated vapour pressure at the pipeline's ambient temperature, the rate of vapour evolution will increase, resulting in a reduction in the rate of pressure decrease. During this phase, the pressure will remain at more or less constant level until all the free water has been converted into water vapour. The vaporisation pressure shall be maintained and water vapour evacuated by pumping until all residual water has evaporated. Once all the free water has evaporated from the pipeline, the rate of pressure decrease will increase.

Ice formation in the pipeline and associated fittings shall be avoided by control of the evacuation rate through the vacuum units. A vaporisation pressure plateau at a level markedly lower than expected or erratic pressure fluctuations during plateau are indications of ice formation.

Vaporisation and evacuation by pumping shall continue until the vapour pressure has reached the level that is equivalent to the dew point specified for the dry pipeline This pressure shall be maintained for at least 3 hrs to confirm that a stable balanced vacuum pressure is established throughout the pipeline. Evacuation shall then be stopped and a soak test carried out.

Vacuum purging with dry air or nitrogen at pressures in the range of 4 mbar (abs) to 10 mbar (abs) may be applied in addition to evacuation by pumping to reduce the time needed for conventional evaporation and water vapour evacuation. The rates and pressures are dependent on the performance curves of the vacuum equipment, as the aim is to increase the pressure in the pipeline to an efficient volume transfer level. If applied, purging and evacuation shall continue until the dew point at the vacuum unit is constantly below the dew point for a dry pipeline as specified in the scope of work while replacing at least twice the contents of the pipeline. Purging shall then be stopped, and the pressure reduced to 3 mbar (abs) and maintained at this level for at least 3 hrs to achieve stable conditions in the pipeline. A soak test shall then be performed.

f) **Soak test/acceptance test**

Soak test is carried out to ensure that all free water has been evaporated. All the equipment other than that required for pressure monitoring shall be temporarily isolated from pipeline for a period of at least 12 hrs and pressure is monitored at an interval of 1 hr.

Pressure monitoring shall be carried out by means of pressure gauges and recorders with range 0 mbar to 10 mbar, a reading division of 0.1 mbar and an accuracy of ± 1 % of the measured value.

Initially the pressure will rise as the higher pressure in the centre of the pipeline (or at the opposite end if a single vacuum plant is in operation) balances with that nearest to the vacuum plant. After this initial stabilisation, which should occur well below the evaporation plateau, the test shall be acceptable if the pressure remains more or less constant (+/-5% variation is acceptable) at 3 mbar. If this is not the case, the observed pressure increases must be due to further flashing-off of moisture vapour, indicating that additional drying is required.

3.2.2.2 Super drying

a) General

The pipeline shall be dried using super dry air or nitrogen. The contractor shall submit work procedure for super drying in line with the scope of work to Engineer-in-charge for approval prior to start of any activity.

The super drying operation shall follow within 48 hrs of swabbing. In case super

drying of the pipeline does not start within 48 hrs of completion of swabbing, then the swabbing shall be repeated again.

The drying medium to be used shall be as specified in the scope of work or as per the directions of Engineer-in-charge. Dry air or nitrogen drying shall be executed consecutively in the following phases:

- pigging;
- purging for drying; and
- Purging for acceptance testing.

The basis of this technique is to run a series of light weight foam pigs through the pipeline with super dry air or dry nitrogen. The pigs initially absorb large quantities of water and ensure that water in the pipeline is continually spread out in a thin film, thus facilitating evaporation into the dry air system. Where permanent pig- launcher and receivers are not available temporary traps must be connected to the line and the drying unit may then be connected to the pig launcher by flexible hoses of appropriate rating.

The sizing of the drying equipment and calculations of the time required for drying shall be based on a film thickness of the residual water of not less than 0.1 mm for internally uncoated pipes and not less than 0.05 mm for internally coated pipes. Air introduced into the pipeline during dry air drying shall have a dew point of at least 15 °C below the final dew point (-8°C) of the pipeline.

Nitrogen used during drying shall have a minimum dew point of -50 °C at atmospheric pressure.

b) **Pigging**

The pipeline shall be pigged with high sealing disc pigs driven by dry air or nitrogen in combination with water absorbing foam pigs having a large water absorption capacity (approximately 80 % of their body mass), high abrasion resistance and a density between 30 to 50 kg/m^3 as follows:

- the travelling speed of the foam pigs should not exceed 1.2 m/s;
- a back-pressure of at least 0.5 bar shall be maintained at the receiving end; and
- pigs in a pig train should be separated by at least 300 meters

Pigging shall continue until the dew point of the drying medium at the receiving end remains below the dew point specified in the scope of work and does not fluctuate by more than 3°C whilst replacing the content of the line by a pig.

c) **Purging For Drying**

After pigging, the pipeline should be purged with the drying medium with a minimum velocity of 3 m/s in the pipeline at the discharge end. Purging shall continue until the dew point at the discharge end remains below the specified dew

point whilst replacing twice the content of the pipeline at purging pressure.

d) **Purging For Acceptance Testing**

The difficulty in defining the acceptance criterion is that the dew point sampling at each end of the pipeline does not necessarily represent the actual dew point condition prevailing within the whole pipeline. This is because the dry air (or nitrogen) entering the pipeline performs extensive drying at the start of the pipeline and then becomes saturated. As the pressure falls off towards the end of the pipeline, the air (or nitrogen) is again able to absorb moisture. Thus the situation can arise where the beginning and the end of a pipeline are dry but the middle may still be wet, or at a higher dew point than the ends. It can be checked that the acceptance criterion has been met by means of the following procedure.

Upon completion of purging, the pipeline shall be blocked-in for a period of at least 12 hrs and at a pressure of 0.5 bar above the ambient pressure at all points along the pipeline. After this period the pipeline content shall be replaced at the lowest possible pressure and the dew point continuously measured at the discharge end.

Drying is complete when the dew point during acceptance purging remains below the final dew point (-8°C) specified for the pipeline whilst replacing the line content. Purging for drying shall recommence and the acceptance test shall be repeated until this requirement has been met.

Upon completion of the drying, the pipeline shall be blocked in at a pressure of 0.5 bar above the ambient pressure at any point along the pipeline.

e) Preservation after Drying

The Contractor shall increase the pressure in the pipeline with either dry air or dry nitrogen.
The requirements for preservation are as follows:
- the final pipeline pressure to be achieved at the end of the filling operation shall be 0.5 bar above the ambient pressure at any point along the pipeline, plus a margin allowing for the maximum possible ambient temperature fluctuation during the post pre-commissioning period;
- The dew point, pressure and temperature of the medium introduced into the pipeline shall be measured and recorded constantly at the inlet of the pipeline throughout the filling operation;
- Warning signs, in English and the local or working languages, such as "PIPELINE FILLED WITH NITROGEN" or "PIPELINE FILLED WITH DRY AIR" shall be provided and placed at block valve stations and pig trap systems.

3.2.2 Low Pressure leak check for aboveground piping

3.2.2.1 General

The aboveground piping sections of the pipeline system shall be checked for leaks at flange points of piping and equipment, instrument impulse tubing points etc. This shall be done by pressurizing the system piping / equipment with dry compressed air (for this purpose, oil free air compressors shall be used) and testing the system by means of soap solution for leaks.

The contractor shall submit the detailed procedure and the duration of the leak check operations and obtain approval of the company before starting the operation.

3.2.2.2 Acceptance criteria

The leak check operation shall be considered to be completed when the piping system / equipment is free of leaks when tested at a pressure of 6.0 Kg/cm^2 g. This shall be subject to Company's approval.

3.2.3 Ready for Commissioning

After completion of drying activities and safety review prior to startup, Contractor shall notify the Company that the systems associated with the pipeline system including the underground pipeline and the above ground piping at dispatch and receipt stations, SV stations and hook-up / tap-of points are ready for gas-in/commissioning. 'Ready for commissioning status' shall be jointly reviewed by Company and Contractor and final clearance for start-up shall be given by the Company. After such joint assessment, if all the criteria are met, it will then be declared that the pipeline system has reached a stage of 'Ready for Commissioning'.

3.2.4 Inertisation

3.2.4.1 General

Contractor shall carry out inertisation of the entire pipeline system including the underground pipeline and the above ground piping at dispatch and receipt stations, SV stations and hook-up / tap-off points).

3.2.4.2 Operational requirements

During the Inertisation operation, the air left in the pipelines shall be replaced by nitrogen before admitting the natural gas into the pipeline for safe commissioning. The pipeline shall be inertized under vacuum condition after drying is achieved. For this, introduce nitrogen from one end of the pipeline maintaining vacuum from other end of the pipeline. After inertisation, gas charging shall be done into the pipeline.
For above ground piping at dispatch and receipt stations, SV stations and hook-up / tap-

of points, the piping shall be purged with nitrogen till the residual oxygen content in the piping is below 1% (vol/vol).

Nitrogen required for Inertisation purpose of the pipeline and aboveground piping shall be supplied by the contractor and should be of purity level 99.9% or above. Nitrogen gas at ambient temperatures (AND NOT LIQUID NITROGEN) and in completely vaporized and gaseous state shall be used as the inertising medium. In case the source of gaseous nitrogen is from liquid nitrogen tankers, then all precautions (including verification of the lowest tolerable temperature of all components in the system under commissioning) should be ensured.

The contractor shall submit the detailed procedure (in line with the above suggested method or any other acceptable one) and the duration of the inertisation operation and obtain approval of the company before starting the operation. Inertisation shall be followed immediately by charging of pipeline by natural gas.

3.2.4.3 Acceptance Criteria

Inertisation of the pipelines may be accepted to be complete when the required quantity of nitrogen has been introduced into the pipeline. The contractor has to ensure this condition for safe commissioning of the pipeline. For above ground piping at dispatch and receipt stations, SV stations and hook-up / tap-of points, the inertisation may be accepted to be complete when the residual oxygen content in the piping is below 1% (vol/vol).

3.2.5 Gas-in/Commissioning and Stabilization

3.2.5.1 General

Contractor shall carry out gas-in and commissioning activities of the entire pipeline system including the underground pipeline and the above ground piping at dispatch and receipt stations, SV stations and hook-up / tap-of points.

3.2.5.2 Operational requirements

During introduction of natural gas into the pipeline, natural gas shall be the motive fluid for driving the last pig of the nitrogen slug train. The pig train speed shall be maintained at 3 to 4 Km/hr. Maintenance of proper backpressure shall control pig train speed. Venting shall be controlled at the pig-receiving end to achieve the desired dynamics. In this fashion, slowly the desired portion of the pipeline shall be commissioned. Alternatively contractor may propose procedure for introduction of gas in pipeline under vacuum condition after inertisation with Nitrogen.

Subsequently, the pipeline system shall be slowly pressurized upto its operating

conditions and high pressure leak checks of the pipeline system at flange points, instrument points etc. shall be carried out with soap solution at regular intervals during the course of pressurization of the pipeline system. Once the pipeline system is pressurized at its operating conditions, normal gas flows shall be established in the pipeline system.

The contractor shall submit the detailed procedure (in line with the above suggested method or any other acceptable one) and the duration of the commissioning operation and obtain approval of the company before starting the operation.

Commissioning shall also include establishing the process control parameters first at turn down & then at design value stipulated in the process package along with supplementary instructions, if any, from Company / Company's Representative.

3.2.5.3 Acceptance Criteria

The system shall be considered to be commissioned successfully when the pipeline system including the underground pipeline and the above ground piping at dispatch and receipt stations, SV stations and hook-up / tap-of points is charged with natural gas, is free of leaks and run successfully at stable operating conditions with instrumentation / control systems process utilities and support systems taken on line for a minimum period of 72 hours.

The commissioning of pipeline system shall include commissioning of branch lines and associated facilities including auxiliary facilities and aboveground piping.

4.0 DOCUMENTATION

Contractor shall submit for approval of the Company, the complete description, detailed procedures and time schedule for all of the following activities:

- Pre-commissioning checks
- Dewatering
- Flushing
- Swabbing
- Drying
- Low pressure leak check of aboveground piping system with dry compressed air
- Inertisation
- Gas in and commissioning activities (including pressurization of pipeline system, high pressure leak check, establishment of flows and 72 hours run).

All these documents should be prepared covering all aspects of HSE, quality assurance and quality control plans.

Contractor shall ensure that his documents are related to “as-built” conditions of the pipeline and structure involved.

Documents shall also contain all safety plans, procedures, to be followed while carrying out the activities.

Upon successful completion of the work, contractor shall prepare a final report of the work which shall include necessary charts, diagrams, graphs, calculations, recordings, daily logs, measurements, details of the operation, etc. Report shall also include all certificates of calibration of instruments required, together with records of calibration performed at site prior to the start of any operation and the approved pre-commissioning and commissioning formats and check sheets.

5.0 SPARES AND CONSUMABLES

Contractor shall identify and arrange for supply of manpower, spares, tools, tackles and consumables as required for pre-commissioning and commissioning activities.

6.0 SAFETY

Contractor shall follow the safety practices during execution of pre-commissioning and Commissioning works as detailed in the scope of work. He shall also maintain and follow all safety practices equivalent or better than those being practiced by the industry during pre-commissioning and commissioning activities.

ANNEXURE - I

FORMAT FOR BIODATA OF KEY PERSONNEL FOR COMMISSIONING

1. PRPOSED POSITION IN ORGANISATION CHART:
2. NAME:
3. QUALIFICATION:
4. TOTAL YEARS OF EXPERIENCE IN PLANT OPERATION / COMMISSIONING:
5. DETAILS OF COMMISSIONING EXPERIENCE:

SL NO.	PROJECT DESCRIPTION	PLANT CAPACITY	LICENSOR	OWNER	YEAR OF COMMISS.	DURATION OF STAY AT SITE

ANNEXURE - II

QUESTIONNAIRE

CLAUSE NO.	DESCRIPTION OF CLAUSE	AGREED	NOT AGREED	REMARKS
1.0	SCOPE	[ ]	[ ]	
2.0	DEFINITIONS	[ ]	[ ]	
3.0	MANUFACTURER REPRESENTATIVE	[ ]	[ ]	
4.0	DOCUMENT FOR PRECOMMISSIONING AND COMMISSIONING	[ ]	[ ]	
5.0	OTHER REQUIREMENTS	[ ]	[ ]	
6.0	REVIEW/CHECKLISTING/INSPECTION/CO-ORDINATION	[ ]	[ ]	
7.0	COMMISSIONING	[ ]	[ ]	
8.0	CONSUMABLES	[ ]	[ ]	
9.0	SPECIAL REQUIREMENTS	[ ]	[ ]	
10.0	SAFETY	[ ]	[ ]	

NOTE:
1) PLEASE TICK THE RELEVANT BOX.
2) MENTION THE REASON & THE SUB-CLAUSE NOT AGREED IN THE REMARKS COLUMN.

ANNEXURE-III

FORMAT TO BE USED DURING PRE-COMMISSIONING AND COMMISSIONING

(TOTAL 5 FORMATS)

F O R M A T - I

INTIMATION REGARDING SYSTEM COMPLETION

PROJECT:_____ CUSTOMER:_____ UNIT:_____

Following system/sub-system has been mechanically completed in all respects with exceptions noted below. The system/sub-system can be taken up for checking and preparation of checklist.

SYSTEM NO.

SYSTEM DESCRIPTION:

EXCEPTIONS:

SIGNATURE DATE

CONTRACTOR'S CONSTRUCTION:

CO-ORDINATOR

The system is ready/ not ready for Check listing

OWNER/ PMC:

F O R M A T - II

CHECKLIST

PROJECT:_____CUSTOMER:_____UINT:_____

SYSTEM/SUB-SYSTEM_____

CHECKLIST TYPE **PRELIMINARY/FINAL**

SL.NO.	CHECKLIST ITEMS	REMARKS

SIGNATURE DATE

PMC :

OWNER:

F O R M A T - III

READY FOR PRE-COMMISSIONING CERTIFICATE

PROJECT:_____CUSTOMER:_____ UNIT:_____

SYSTEM/SUB-SYSTEM_____

This is to certify that the following Plant/system/sub- system as detailed below is completely installed and all the Checklist points are carried out except for minor details as given in the attached list.

DESCRIPTION ON PLANT/SECTION/SUB-SECTION_____

SIGNATURE DATE

CONTRACTOR'S CONSTRUCTION
CO-ORDINATOR:

CONTRACTOR'S COMMISSIONING
CO-ORDINATOR

The system is ready/ not ready for pre-commissioning

PMC :
OWNER:

F O R M A T - IV

READY FOR COMMISSIONING CERTIFICATE

PROJECT:_____CUSTOMER:_____ UNIT:_____

SYSTEM/SUB-SYSTEM_____

This is to certify that all the necessary pre-commissioning activities for the system/sub-system as detailed below have been completed and the system/sub-system is ready for commissioning except for the minor details as given below which will not effect the commissioning trial runs.

DESCRIPTION OF SYSTEM/SUB-SYSTEM_____

SIGNATURE DATE

CONTRACTOR'S COMMISSIONING:

CO-ORDINATOR SIGNATURE DATE

PMC: OWNER:

F O R M A T - V

COMPLETION OF COMMISSIONING CERTIFICATE

PROJECT:_____CUSTOMER:_____ UNIT:_____

SYSTEM/SUB-SYSTEM_____

This is to certify that the system/sub-system as detailed below has been successfully commissioned and is under operational control of Client's Production department. The minor items, which will not effect the normal operation of the system/sub-system, are given in the attached list.

DESCRIPTION OF SYSTEM/SUB-SYSTEM_____

SIGNATURE DATE

CONTRACTOR'S COMMISSIONING:
CO-ORDINATOR SIGNATURE DATE

PMC: OWNER:

15.0 Stud bolts, nuts & jackscrews shall be impact tested wherever specified in the material specification and also where the material specification is indicated as "CRYO". For" S.S. nuts and bolts minimum impact energy absorption shall be 27 Joules and test temperature shall be -196°C unless mentioned otherwise. For other materials impact energy and test shall be as per respective code.

16.0 Bolts / nuts of material of construction B7M / 2HM shall be 100% Hardness tested as per supplementary requirement S3 of ASTM A 193.

17.0 When specified as galvanized, the studs, m/c bolts and nuts shall be 'hot dip zinc coated' in accordance with requirements of 'class C' of 'ASTM A 153'. As an alternative, electro-galvanizing as per IS 1573, 'Service Grade Number 2' is also acceptable.

18.0 All Stud Bolts of Bolt diameter size 1" and above shall be provided with three nuts irrespective of whatever has been specified elsewhere in the MR.

Rev. : 0
Edition : 1

SPECIFICATION
FOR
HEALTH, SAFETY
AND
ENVIRONMENT (HSE)
MANAGEMENT

SPECIFICATION NO.: MEC/S/05/21/65

(OIL & GAS SBU)
MECON LIMITED
DELHI 110 092

CONTENTS

SL. NO.	DESCRIPTION
1.0	SCOPE
2.0	REFERENCES
3.0	REQUIREMENT OF HEALTH, SAFETY & ENVIRONMENT (HSE) MANAGEMENT SYSTEM TO BE COMPLETED BY BIDDERS.
4.0	DETAILS OF HSE MANAGEMENT SYSTEM BY CONTRACTOR
5.0	RECORDS
	ANNEXURE-A
	ANNEXURE-B
	ANNEXURE-C
	ANNEXURE-D
	ANNEXURE-E

1.0 SCOPE

This specification establishes the Healthy, Safety and Environment (HSE) management requirement to be compiled with by the Contractors during construction.

This specification is not intended to replace the necessary professional judgement needed to design & implement an effective HSE system for construction activities and the contractor is expected to exceed requirements given in this specification.

Requirement stipulated in this specification shall supplement the requirement of HSE management given in relevant Act (S)/ legislations. General Condition of Contract (GCC) Special Condition of Contract (SCC) and Job Specifications. Where different documents stipulate different requirements, the most stringent shall be adopted.

2.0 REFERENCES

This document should be read in conjunction with following:

- General Conditions of Contract (GCC)
- Special Conditions of Contract (SCC)
- Building and other construction workers (regulation of employment and condition of service) Act, 1996
- Job Specifications
- Relevant IS Codes (refer Annexure-A)
- Reporting Formats (refer Annexure-B)
- Statutory requirements

3.0 REQUIREMENT OF HEALTH, SAFETY & ENVIRONMENT (HSE) MANAGEMENT SYSTEM TO BE COMPLETED BY BIDDERS.

3.1 Management Responsibility

3.1.1 The Contract should have a document HSE policy to cover commitment of the organization to ensure health, safety and environment aspects in their line of operations

3.1.2 The HSE management system of the Contractor shall cover HSE requirement including but not limited to what specified under clause 1.0 & 2.0 mentioned above

3.1.3 Contractor shall be fully responsible for planning and implementing HSE requirement to the satisfaction of the company. Contractor as a minimum requirement shall designate/deploy the following to co-ordinate the above:

No. Of workers deployed		
Up to 250	-	Designate one safety supervisor who will guide the workers from time to time, as well as impart training basic guidelines at least weekly once.

Above 250 & upto 500	-	Deploy one qualified and experienced safety Engineer/ Officer who will guide the workers from time to time as well as impart basic guideline & training at least weekly once. He / She shall possess a recognized Degree in any branch of engineering or technology or architecture and had a post qualification construction experience of minimum two years or possess a recognized Diploma in any branch of engineering or technology or Graduate in Science stream and had a post qualification construction experience of minimum five years.
Above 500 (for every 500 or less)	-	One additional safety engineer/Officer whose function will be as mentioned above

Contractor shall indemnify and hold harmless OWNER/ MECON & their representative's from any and all liabilities arising out of non fulfillment of HSE requirements.

Above is the minimum requirement and the Contractor shall ensure physical presence of a safety personnel at each place where Hot work permit is required. No work shall be started at site until above safety personnel are physically present at site. The contractor shall submit a safety organogram clearly indicating the lines of responsibility and reporting system. He shall furnish Bio-Data/Resume/Curriculum Vitae of the safety personnel he intends to mobilize, at least 1 month before the intended mobilization, for MECON/Owner's approval.

3.1.4 The Contractor shall ensure that the Health, Safety and Environment (HSE) requirements are clearly understood & faithfully implemented at all levels, at each and every site/ work place.

3.1.5 The Contractor shall promote and develop consciousness for Health, Safety and Environment among all personnel working for the Contractor. Regular awareness programs and fabrication shop/work site meeting shall be arranged on HSE activities to cover hazards involved in various operations during construction.

3.1.6 Arrange suitable first aid measures such as First Aid Box, trained personnel to give First Aid, Stand by Ambulance or Vehicle and install fire protection measures such as: adequate number of steel buckets with sand and water and adequate fire extinguishers to the satisfaction of OWNER/ MECON. In case the number of workers exceeds 500, the Contractor shall position an ambulance /vehicle on full time basis very close to the worksite.

3.1.7 The Contractor shall evolve a comprehensive planned and documented system for implementation and monitoring of the HSE requirements. This shall submitted to

OWNER & MECON for approval well in advance, prior to start of work. The monitoring for implementation shall be done by regular inspection and compliance to the observations thereof. The Contractor shall get similar HSE requirements implemented at his sub-contractor (s) work site/ Office. However, compliance of HSE requirement shall be the sole responsibility of the Contractor. Any review/ approval by OWNER/ MECON shall not absolve the Contractor of his responsibility/ liability in relation to all HSE requirements.

3.1.8 Non-Conformance on HSE by the Contractor (including his Sub-contractors) as brought out during review/ audit by MECON/ OWNER representative shall be resolved forthwith by Contractor. Compliance report shall be possibility submitted to MECON/ OWNER at the earliest.

3.1.9 The Contractor shall ensure participation of his Resident Engineer/Site-in-Charge in the Safety Committee/HSE Committee meetings arranged by OWNER/ MECON. The compliance of any observation shall be arranged urgently. Contractor shall assist OWNER/MECON to achieve the targets set by them on HSE during the project implementation.

The contractor shall ensure that his staff members & workers (permanent as well casual) shall not be in a state of intoxication during working hours and shall abide by any law relating to consumption & possession of intoxicating drinks or drugs in force. Awareness about local laws on this issue shall form part of the Induction Training.

The contractor shall ensure that all personnel working for him comply with No-smoking requirements of the owner as notified from time to time. Cigarettes, lighters, auto ignition tools or appliances shall not be allowed inside the plant complex. Smoking shall be permitted only inside smoking booths expressly designated & authorized by the Owner/MECON.

3.1.10 The Contractor shall adhere consistently to all provisions of HSE requirements. In case of non-compliance or continuous failure in implementation of any of HSE provisions; OWNER/ MECON may impose stoppage of work without any Cost & Time implication to Owner and/or impose a suitable penalty for non-compliance with a notice of suitable period, upto a cumulative limit of 1.0% (one percent) of Contract value with a ceiling of Rs. 10 lakhs.

0.2% (Zero decimal two percent) of the contract value for LSTK, EPC, EPCC or Package contracts with an overall ceiling of Rs. 1,00,00,000/- (Rupees one crore).

S. No.	Violation or HSE norms	Penalty Amount
1.	For not using personal protective equipment (Helmet, Shoes, Goggles, Gloves, Full body harness, Face shield, Boiler suit, etc.)	Rs. 250/- per day / item / person
2.	Working without Work Permit / Clearance	Rs.5,000/- per occasion

S. No.	Violation or HSE norms	Penalty Amount
3.	Unsafe electrical practices (not installing ELCB, using poor joints of cables, using naked wire without top plug into socket, laying wire / cables on the roads, electrical jobs by incompetent person, etc.)	Rs.3,000/- per item per day.
4.	Working at height without full body harness, using non-standard / rejected scaffolding and not arranging fall protection arrangement as required like Safety Nets.	Rs.1,000/ per case per day.
5.	Unsafe handling of compressed gas cylinders (No trolley, jubilee clips double gauge regulator, improper storage / handling).	Rs. 100/- per item per day
6.	Use of domestic LPG for cutting purpose.	Rs.1,000/- per occasion
7.	No fencing / barricading of excavated areas.	Rs.1,000/- per occasion
8.	Not providing shoring / strutting / proper slope and not keeping the excavated earth at least 1.5 M away from excavated area.	Rs.5,000/- per occasion
9.	Non display of caution boards, list of hospitals, emergency services available at work locations.	Rs.500/- per occasion
10.	Traffic rules violations like over speeding of vehicles, rash driving, wrong parking, not using seat belts, vehicles not fitted with reverse warning alarms.	Rs.1,000/- per occasion
11.	Absence of Contractor's top most executive at site in the safety meetings whenever called by MECON / Owner	Rs.1,000/- per occasion
12.	Failure to maintain safety records by Contractor Safety personnel.	Rs.1,000/- per month.
13.	Failure to conduct daily safety site inspection, HSE meeting and HSE audit at predefined frequencies.	Rs.1,000/- per occasion
14.	Failure to submit the monthly HSE report by 5th of subsequent month to Engineer-in-Charge.	Rs. 1,000/- per occasion and Rs. 100/- per day for further delay.
15.	Poor House Keeping	Rs.1,000/- per occasion
16.	Failure to report & follow up accident (including Near Miss) reporting system.	Rs. 10,000/- per occasion

S. No.	Violation or HSE norms	Penalty Amount
17.	Degradation of environment (not confining toxic spills oil / lubricants onto ground)	Rs.1,000/- per occasion
18.	Not medically examining the workers before allowing them to work at height, not providing ear muffs while allowing them to work in noise polluted areas, made them to work in air polluted areas without respiratory protective devices, etc.	Rs.1,000/- per occasion
19.	Violation of any other safety condition as per job HSE plan, work permit and HSE conditions of contract (using crowbar on cable trenches, improper welding booth, not keeping fire extinguisher ready at hot work site, unsafe rigging practices, non-availability of First-Aid box, etc.)	Rs.1,000/- per occasion
20.	Any violation not covered above.	To be decided by MECON / Owner

This penalty shall be in addition to all other penalties specified else where in the contract. The decision of imposing stoppage of work, its extent & monitory penalty shall rest with MECON/OWNER & binding on the Contractor.

3.1.11 All fatal accidents and other personnel accidents shall be investigated by a team of Contractor's senior personnel for root cause and recommend corrective and preventive actions. Findings shall documented and suitable actions taken to avoid recurrences shall be communicated to OWNER / MECON. OWNER / MECON shall have the liberty to independently investigate such occurrences and Contractor shall extend all necessary help and co-operation in this regard. MECON / Owner shall have to right to share the content of this report with the outside world.

3.2 **House Keeping**

3.2.1 Contractor shall ensure that a high degree of house keeping is maintained and shall ensure the followings:

a. All surplus earth and debris are removed/disposed off from the working site to identified location (s).

b. Unused/Surplus Cables Steel items and steel scrap lying scattered at different places within the working areas are removed to identified location (s).

c. All wooden scrap, empty wooden cable drums and other combustible packing materials shall be removed from work place to identified location(s).

d. Roads shall be kept clear and materials like pipes, steel, sand, boulders, concrete chips and bricks, etc. shall not be allowed in the roads to obstructs free movement of men & machineries.

e. Fabricated steel structurals, pipes & piping materials shall be stacked properly for erection.

f. Water logging on rods shall not be allowed.

g. No parking of trucks/ trolleys, cranes and trailors etc. shall be allowed on of roads, which may obstruct the traffic movements.

h. Utmost care shall be taken to ensure over all cleanliness and proper up keep of the working areas.

i. Trucks carrying sand, earth and pulverized materials etc. shall be covered while moving within the plant areas.

j. The contractor shall ensure that the atmosphere in plant area and on roads is free from particulate matter like dust, sand, etc. by keeping the top surface wet for ease in breathing.

k. At least two exits for any unit area shall be assured at all times.

3.3 **Healthy, Safety and Environment**

a) The Contractor shall provide safe means of access to any working place including provision of suitable and sufficient scaffolding at various stages during all operations of the work for the safety of his workmen, and OWNER/ MECON. Contractor shall ensure deployment of appropriate equipment and appliances for adequate safety and healthy of the workmen and protection of surrounding areas.

Contractor shall ensure identification of all Occupational Health, Safety & Environmental hazards in the type of work he is going to undertake and enlist mitigation measures. Contractor shall carry out Job Safety Analysis (JSA) specifically for high risk jobs like working at height & in confined space, deep excavations, radiography jobs, electrical installations, blasting operations, demolishing / dismantling activities, welding / gas cutting jobs and submit the findings to MECON / Owner. The necessary HSE measures devised shall be in place prior to start of an activity by the contractor.

b) The Contractor shall ensure that all their staff workers including their sub-Contractor (s) shall wear Safety Helmet and Safety shoes. Contractor shall also ensure use of safety belt, protective goggles, gloves etc. by the personnel as per jobs requirements. All these gadgets shall conform to relevant IS specification equivalent.

The Contractor shall ensure that all their staff, workers and visitors including their sub-contractor(s) have been issued (records to be kept) & wear appropriate PPEs like nape strap type safety helmets preferably with head & sweat band with ¾" cotton chin strap (made of industrial HDPE), safety shoes with steel toe cap and antiskid sole, full body harness (C∈ marked and conforming to EN361), protective goggles, gloves, ear muffs, respiratory protective devices, etc. All these gadgets shall conform to applicable IS Specifications / C∈ or other applicable international standards.

Owner may issue a comprehensive color scheme for helmets to be used by various agencies. The Contractor shall follow the scheme issued by the owner. All Safety / Fire personnel shall preferably wear red colour helmet so that workmen can approach them for guidance during emergencies.

For shot blasting, the usage of protective face shield and helmets, gauntlet and protective clothing is mandatory.

For offshore jobs/contracts, contractor shall provide PPEs (new) to MECON & Owner's personnel, at his (contractor's) cost. All personnel shall wear life jacket at all time.

An indicative list of HSE standards/codes is given under Appendix-A.

The contractor shall issue height permit for working at height after verifying and certifying the checkpoints as specified in the attached permit (Format No. HSE-6). He shall also undertake to ensure compliance to the conditions of the permit during the currency of the permit including adherence to personal protective equipments.

The permit shall be issued initially for one week or expected duration of an activity and extended further for the balance duration. This permit shall be applicable in areas where specific clearance from Owner's operation Deptt. / Safety Deptt. is not required. MECON field Engineers / Safety Officers / Area Coordinators may verify and counter sign this permit (as an evidence of verification) during the execution of the job.

In case work is undertaken without taking sufficient precautions as given in the permit, MECON Engineers may cancel the permit and stop the work till satisfactory compliance is arranged. Contractors are expected to maintain a register for issuance of permit and extensions thereof including preserving the used permits for verification during audits etc.

Contractor shall arrange (at his cost) and ensure use of Fall Arrester Systems by his workers. Fall arresters are to be used while climbing / descending tall structures. These arresters should lock automatically against the anchorage line, restricting free fall of the user. The device is to be provided with a double security opening system to ensure safe attachment or release of the user at

any point of rope. In order to avoid shock, the system should be capable of keeping the person in vertical position in case of a fall.

Contractor shall ensure that Full body harnesses conforming EN361 and having authorized CC marking is used by all personnel while working at height. The lanyards and life lines should have enough tensile strength to take the load of the worker in case of a fall. One end of the lanyard shall be firmly tied with the harnesses and the other end with life line. The harness should be capable of keeping the workman vertical in case of a fall, enabling him to rescue himself.

Contractor shall provide Roof Top Walk Ladders for carrying out activities on sloping roofs in order to reduce the chances of slippages and falls.

c) Contractor shall ensure that a proper Safety Net System shall be used at appropriate locations. The safety net shall be located not more than 30 feet (9.0 metres) below the working surface at site to arrest or to reduce the consequences of possible fall of persons working at different heights.

d) Contractor shall ensure that flash back arrestors conforming to BS:6158 or equivalent are installed on all gas cylinders as well as at the torch end of the gas hose, while in use. All cylinders shall be mounted on trolleys and provided with a closing key. The burner and the hose placed downstream of pressure reducer shall be equipped with Flash Back Arrester / Non Return Valve device. The hoses for acetylene and oxygen cylinders must be of different colours. Their connections to cylinders and burners shall be made with a safety collar. At end of work, the cylinders in use shall be closed and hoses depressurized. All welding machines shall have effective earthing. In order to help maintain good housekeeping, and to reduce fire hazard, live electrode bits shall be contained safely and shall not be thrown directly on the ground.

e) The Contractor shall assign to his workmen, tasks commensurate with their qualification, experience and state of health for driving of vehicles, handling and erections of materials and equipment's. All lifting equipments shall be tested certified for its capacity before use. Adequate and suitable lighting at every work place and approach there to shall be provided by the contractor before starting the actual work/ operation at night.

Contractor shall ensure installation of Safe Load Indicator (SLI) on all cranes (while in use) to minimize overloading risk. SLI shall have capability to continuously monitor and display the load on the hook, and automatically compare it with the rated crane capacity at the operating condition of the crane. The system shall also provide visual and audible warnings at set capacity levels to alert the operator in case of violations.

The contractor shall be responsible for safe operations of different equipments mobilized and used by him at the workplace like transport

vehicles, engines, cranes, mobile ladders, scaffoldings, work tools, etc.

f) Hazardous and/or toxic material such as solvent coating or thinners shall be stored in appropriate containers.

g) All hazardous materials shall be labeled with the name of the materials, the hazards associated with its use and necessary precautions to be taken.

The work place shall be checked prior to start of activities to identify the location, type and condition of any asbestos materials which could be disturbed during the work. In case asbestos material is detected, usage of appropriate PPEs by all personnel shall be ensured and the matter shall be reported immediately to MECON / Owner.

h) Contractor shall ensure that during the performance of the work all hazards to the health of personnel have been identified assessed and eliminated.

i) Chemical spills shall be contained & cleaned up immediately to prevent further contamination.

j) All personnel exposed to physical agents such as ionizing or non-ionizing radiation ultraviolet rays or similar other physical agents shall be provided with adequate shielding or protection commensurate with type of exposure involved. For ionizing radiation, requirements of Bhabha Atomic Research Centre (BARC)/ Atomic Energy Regulatory Board (AERB) shall be followed.

k) Where contract or exposure of hazardous materials could exceed limits or could otherwise have harmful affects, appropriate personal protective equipment's such as gloves, goggles, aprons, chemical resistant clothing and respirator shall be used.

l) Contractor shall ensure the following facilities at work sites:

I) A Crèche where 10 or more female workers are having children below the age of 6 years.

II) Reasonable Canteen facilities are made available at appropriate location depending upon site conditions.

m) Suitable facilities for toilet, drinking water, proper lighting shall be provided at site and labor camps, commensurate with applicable Laws/Legislation.

n) Contractor shall ensure storage and utilization methodology of material that are not detrimental to the environment. Wherever required Contractor shall ensure that only the environment friendly material are selected.

Emphasize on recycling of waste materials such as metals, plastics, glass, paper, oil & solvents. The waste that can not be minimized, reused or

recovered shall be stored and disposed of safely. In no way, toxic spills shall be allowed to percolate into the ground. The contractor shall not use the empty areas for dumping the wastes.

o) All person deployed at site shall be knowledgeable of and comply with the environmental laws, rules & regulation relating to the hazardous materials substance and wastes. Contractor shall not dump, release or otherwise discharge or dispose off any such materials without the authorization of OWNER/ MECON.

Suitable scaffoldings shall be provided to workmen for all works that cannot be safely done from the ground or from solid construction except such short period work that can be safely done using ladders. When a ladder is used, an extra workman shall be engaged for holding the ladder.

The contractor shall ensure that the scaffolds used during construction activities shall be strong enough to take the designed load. Owner / MECON reserves the right to ask the contractor to submit certification and or design calculations from his Engineering regarding load carrying capacity of the scaffoldings.

All scaffolds shall be inspected by a Scaffolding Inspector of the contractor. He shall paste a GREEN tag on each scaffold found safe and a RED tag on each scaffold found unsafe. Scaffolds with GREEN tag only shall be permitted to be used and RED ones shall immediately be removed from the site.

All electrical installations / connections shall be carried out as per the provisions of latest revision of following codes/standards, in addition to the requirements of Statutory Authorities and IE / applicable international rules & regulations:

- OISO SID 173 : Fire prevention & protection system for electrical installations
- SP 30 (BIS) : National Electric Code

All electrical installations shall be approved by the concerned statutory authorities.

- The contractor shall meet the following requirements:

i) Ensure that electrical systems and equipment including tools & tackles used during construction phase are properly selected, installed, used and maintained as per provisions of the latest revision of the Indian Electrical / applicable international regulations.

ii) Shall deploy qualified & licensed electricians for proper & safe installation and for regular inspection of construction power

distribution system / points including their earthing. A copy of the license shall be submitted to MECON / Owner for records. Availability of at least one competent licensed electrician shall be ensured at site round the clock to attend to the normal / emergency jobs.

iii) All switchboards / welding machines shall be kept in well-ventilated & covered shed. The shed shall be elevated to avoid water logging. No flammable materials shall be used for constructing the shed. Also flammable materials shall not be stored in and around electrical equipment / switchboard. Adequate clearances and operational space shall be provided around the equipment.

iv) Fire extinguishers and insulating mats shall be provided in all power distribution centers.

v) Temporary electrical equipment shall not be employed in hazardous area without obtaining safety permit.

vi) Proper house keeping shall be done around the electrical installations.

vii) All temporary installations shall be tested before energising, to ensure proper earthing, bonding, suitability of protection system, adequacy of feeders/cables etc.

viii) All welders shall use hand gloves irrespective of holder voltage.

ix) Multilingual (Hindi, English and local language) caution boards, shock treatment charts and instruction plate containing location of isolation point for incoming supply, name & telephone No. of contact person in emergency shall be provided in substations and near all distribution boards / local panels.

x) Operation of earth leakage device shall be checked regularly by temporarily connecting series test lamp (2 bulbs of equal rating connected in series) between phase and earth.

xi) Regular inspection of all installations (at least once in a month)

- The following features shall also be ensured for all electrical installations during construction phase by the contractor:

i) Each installation shall have a main switch with a protective device, installed in an enclosure adjacent to the metering point. The operating height of the main switch shall not exceed 1.5 M. The main switch shall be connected to the point of supply by means of armoured cable.

ii) The outgoing feeders shall be double or triple pole switches with fuses / MCBs. Loads in a three phase circuit shall be balanced as far as

possible and load on neutral should not exceed 20% of load in the phase.

iii) The installation shall be adequately protected against overload, short circuit and earth leakage by the use of suitable protective devices. Fuses wherever used shall be HRC type. Use of rewirable fuses shall be strictly prohibited. The earth leakage device shall have an operating current not exceeding 30 mA.

iv) All connections to the hand tools / welding receptacles shall be taken through proper switches, sockets and plugs.

v) All single phase sockets shall be minimum 3 pin type only. All unused sockets shall be provided with socket caps.

vi) Only 3 core (P+N+E) overall sheathed flexible cables with minimum conductor size of 1.5 mm^2 copper shall be used for all single phase hand tools.

vii) Only metallic distribution boxes with double earthing shall be used at site. No wooden boxes shall be used.

viii) All power cables shall be terminated with compression type cable glands. Tinned copper lugs shall be used for multistrand wires / cables.

ix) Cables shall be free from any insulation damage.

x) Minimum depth of cable trench shall be 750 mm for MV & control cables and 900 mm for HV cables. These cables shall be laid over a sand layer and covered with sand, brick & soil for ensuring mechanical protection. Cables shall not be laid in waterlogged area as far as practicable. Cable route markers shall be provided at every 25 M of buried trench route. When laid above ground, cables shall be properly cleated or supported on rigid poles of atleast 2 M high. Minimum head clearance of 6 meters shall be provided at road crossings.

xi) Under ground road crossings for cables shall be avoided to the extent feasible. In any case no under ground power cable shall be allowed to cross the roads without pipe sleeve.

xii) All cable joints shall be done with proper jointing kit. No taped / temporary joints shall be used.

xiii) An independent earthing facility should preferably be established within the temporary installation premises. All appliances and

equipment shall be adequately earthed. In case of armoured cables, the armour shall be bonded to the earthing system.

xiv) All cables and wire rope used for earth connections shall be terminated through tinned copper lugs.

xv) In case of local earthing, earth electrodes shall be buried near the supply point and earth continuity wire shall be connected to local earth plate for further distribution to various appliances. All insulated wires for earth connection shall have insulation of green colour.

xvi) Separate core shall be provided for neutral. Earth / Structures shall not be used as a neutral in any case.

xvii) ON/OFF position of all switches shall be clearly designated / painted for easy isolation in emergency.

The contractor shall identify all operations that can adversely affect the health of its workers and issue & implement mitigation measures.

For surface cleaning operations, sand blasting shall not be permitted even if not explicitly stated elsewhere in the contract.

To eliminate radiation hazard, Tungsten electrodes used for Gas Tungsten Arc Welding shall not contain Thorium.

Appropriate respiratory protective devices shall be used to protect workmen from inhalation of air borne contaminants like silica, asbestos, gases, fumes, etc.

Workmen shall be made aware of correct methods for lifting, carrying, pushing & pulling of heavy loads. Wherever possible, manual handling shall be replaced by mechanical lifting equipments.

For jobs like drilling / demolishing / dismantling where noise pollution exceeds the specified limit of 85 decibels, ear muffs shall be provided to the workers.

To avoid upper limb disorders and backaches, Display Screen Equipments' workplace stations shall be carefully designed & used with proper sitting postures. Power driven hand-held tools shall be maintained in good working condition to minimize their vibrating effects and personnel using these tools shall be taught how to operate them safely & how to maintain good circulation in hands.

The contractor shall arrange health check up for all the workers at the time of induction. Health check may have to be repeated if the nature of duty assigned to him is changed necessitating health check or doubt arises about his wellness. MECON / Owner reserve the right to ask the contractor to submit test reports.

Weather Protection

Contractor shall take appropriate measures to protect workers from severe storms, solar radiations, poisonous gases, dust, etc. by ensuring proper usage of PPEs like Sun glasses, Sun screen lotions, respirators, dust masks, etc. and rearranging / planning the construction activities to suit the weather conditions.

Communication

All persons deployed at the work site shall have access to effective means of communication so that any untoward incident can be reported immediately and assistance sought by them.

All health & safety information shall be communicated in a simple & clear language easily understood by the local workforce.

Unsuitable Land Conditions

Contractor shall take appropriate measures and necessary work permits / clearances if work is to be done in or around marshy areas, river crossings, mountains, monuments, etc.

Under Water Inspection

Contractor shall ensure that boats and other means used for transportation, surveying & investigation works shall be certified seaworthy by a recognized classification society. It shall be equipped with all life saving devices like life jackets, adequate fire protection arrangements and shall posses communication facilities like cellular phones, wireless, walkie-talkie. All divers used for seabed surveys, underwater inspections shall have required authorized license, suitable life saving kit. Number of hours of work by divers shall be limited as per regulations. MECON / Owner shall have the right to inspect the boat and scrutinize documents in this regard.

TOOL BOX MEETING (TBM)

Contractor shall conduct daily TBM with workers prior to start of work and shall maintain proper record of the meeting. A suggested format is given below. The TBM is to be conducted by the immediate supervisor of the workers.

TOOLBOX MEETING RECORDING SHEET

Date & Time		
Subject		
Presenter		
Hazards involved		
Precautions to be taken		
Worker's Name	Signature	Section
Remarks, if any		

The topics during TBM shall include

- Hazards related to work assigned on that day and precautions to be taken.
- Any forthcoming HSE hazards / events / instruction / orders, etc.

The above record can be kept in local language, which workers can read. These records shall be made available to MECON / Owner whenever demanded.

TRAINING

Contractor shall ensure that all his personnel possess appropriate training to carry out the assigned job safely. The training should be imparted in a language understood by them and should specifically be trained about

- Potential hazards to which they may be exposed at their workplace
- Measures available for prevention and elimination of these hazards

The topics during training shall cover, at the minimum;

- Education about hazards and precautions required
- Emergency and evacuation plan
- HSE requirements
- Fire fighting and First-Aid
- Use of PPEs
- Local laws on intoxicating drinks, drugs, smoking in force

Records of the training shall be kept and submitted to MECON / Owner whenever demanded.

For offshore and jetty jobs, contractor shall ensure that all personnel deployed have undergone a structured sea survival training including use of lifeboats, basket landing, use of radio communication etc. from an agency acceptable to Owner / MECON.

INSPECTION

The contractor shall carryout daily HSE inspection and record observations at a central location. These inspection records shall be freely accessible to Owner / MECON representatives. The contractor shall also assist Owner / MECON representatives during the HSE inspections conducted by them.

ADDITIONAL SAFETY REQUIREMENTS FOR WORKING INSIDE A RUNNING PLANT

As a minimum, the contractor shall ensure adherence to following safety requirements while working in or in the close vicinity of an operating plant :

a) Contractor shall obtain permits for Hot work, Cold work, Excavation and Confined Space from Owner in the prescribed format.

b) The contractor shall monitor, record and compile list of his workers entering the operational plant/unit each day and ensure & record their return after completing the job.

c) Contractor's workers and staff members shall use designated entrances and proceed by designated routes to work areas only assigned to them. The workers shall not be allowed to enter units' area, tanks area, pump rooms, etc. without work authorization permit.

d) Work activities shall be planned in such a way so as to minimize the disruption of other activities being carried out in an operational plant / unit and activities of other contractors.

e) The contractor shall submit a list of all chemicals / toxic substances that are intended to be used at site and shall take prior approval of the Owner.

f) Specific training on working in a hydrocarbon plant shall be imparted to the work force and mock drills shall be carried out for Rescue operations / First-Aid measures.

g) Proper barricading / cordoning of the operational units / plants shall be done before starting the construction activities. No unauthorized person shall be allowed to trespass. The height and overall design of the barricading structure shall be finalized in consultation with the Owner and shall be got approved from the Owner.

h) Care shall be taken to prevent hitting underground facilities such as electrical cables, hydrocarbon piping during execution of work.

i) Barricading with water curtain shall be arranged in specific/critical areas where hydrocarbon vapors are likely to be present such as near horton spheres or tanks. Positioning of fire tenders (from owner) shall also be ensured during execution of critical activities.

j) Emergency evacuation plan shall be worked out and all workmen shall be apprised about evacuation routes. Mock drill operations may also be conducted.

k) Flammable gas test shall be conducted prior to any hot work using appropriate measuring instruments. Sewers, drains, vents or any other gas escaping points shall be covered with flame retardant tarpaulin.

l) Respiratory devices shall be kept handy while working in confined zones where there is a danger of inhalation of poisonous gases. Constant monitoring of presence of Gas / Hydrocarbon shall be done.

m) Clearance shall be obtained from all parties before starting hot tapping, patchwork on live lines and work on corroded tank roof.

n) Positive isolation of line/equipment by blinding for welding/cutting/grinding shall be done. Closing of valve will not be considered sufficient for isolation.

o) Welding spatters shall be contained properly and in no case shall be allowed to fall on the ground containing oil. Similar care shall be taken during cutting operations.

p) The vehicles, cranes, engines, etc. shall be fitted with spark arresters on the exhaust pipe and got it approved from Safety Department of the Owner.

q) Plant air should not be used to clean any part of the body or clothing or use to blow off dirt on the floor.

r) Gas detectors should be installed in gas leakage prone areas as per requirement of Owner's plant operation personnel.

s) An experienced full time safety personnel shall be exclusively deployed to monitor safety aspects in running plants.

HSE PROMOTION

The contractor shall encourage his workforce to promote HSE efforts at workplace by way of organizing workshops / seminars / training programmes, celebrating HSE awareness weeks & National Safety Day, conducting quizzes & essay competitions, distributing pamphlets, posters & material on HSE, providing incentives for maintaining good HSE practices and granting bonus for completing the job without any lost time accident.

4.0 DETAILS OF HSE MANAGEMENT SYSTEM BY CONTRACTOR

4.1 On Award of Contract

The Contractor shall prior to start of work submit his Health. Safety and Environment Manual of procedure and HSE Plans for approval by OWNER/MECON. The Contractor shall participate in the pre-start meeting with OWNER/MECON to finalize HSE plans including the following.

- Job procedure to be followed by Contractor for activities covering Handling of equipment's, Scaffolding, Electric Installation, describing the risks involved, actions to be taken and methodology for monitoring each.

- Organizations structure alongwith responsibility and authority records/ reports etc. on HSE activities.

4.2 During job execution

4.2.1 Implement approved Health, Safety and Environment management procedure including but not limited to as brought our under para 3.0. Contractor shall also ensure to:

- Arrange workmen compensation insurance, registration under ESI Act, third party liability insurance etc. as applicable.

- Arrange all HSE permits before start of activities (as applicable) like her work, confined space, work at heights, storage of Chemicals/explosives materials and its use and implement all precautions mentioned therein

- Submit timely the completed check list on HSE activities, Monthly HSE report, accident report, investigation report, etc. as per OWNER/MECON requirements. Compliance of instructions on HSE shall be done by Contractor and informed urgently to OWNER/MECON.

- Ensure that resident Engineers/Site-In-Charge of the Contractor shall amend all the Safety Committee/HSE meeting arranged by OWNER/ MECON only in case of his absence from site, a seconds senior most person shall be nominated by him in advance and communicated to OWNER/MECON.

- Display at site office and work locations caution boards, list of hospitals for emergency services available.

- Provided posters, banners, for safe working to promote safety consciousness

- Carryout audits/inspection at sub Contractor work as per approved HSE documents & submit the reports for OWNER/MECON review.

- Assist in HSE audits by OWNER/ MECON and submit compliance report.

- Generate & submit HSE records/ reports as per HSE Plan.

- Appraise OWNER/MECON on HSE activities at site.

5.0 RECORDS

At the minimum, the contractor shall maintain/ submit HSE records in the following reporting formats:

1.	Monthly HSE Checklist cum compliance report	HSE-1
2.	Accident / Incident Report	HSE-2
3.	Supplementary Accident / Incident Investigation report	HSE-3
4.	Near Miss Incident Report	HSE-4
5.	Monthly HSE Report	HSE-5
6.	Permit for working at height	HSE-6
7.	Permit for working in confined space	HSE-7
8.	Permit for radiation work	HSE-8
9.	Permit for demolishing / dismantling	HSE-9

ANNEXURE-A

A. I.S. CODES ON HSE

SP:53	Safety code for the use, Care and protection of hand operated tools.
IS: 818	Code of practice for safety and health requirements in electric and gas welding and cutting operations
IS: 1179	Eye and Face precautions during welding, equipment etc.
IS: 1860	Safety requirements for use, care and protection of abrasive grinding wheels.
IS: 1989(Part-I & II)	Leather safety boots and shoes
IS: 2925	Industrial Safety Helmets
IS: 3016	Code of practice for fire safety precautions in welding and cutting operations.
IS: 3043	Code of practice for earthing.
IS: 3764	Code of safety for excavation work
IS: 3786	Methods for computation of frequency and severity rates for industrial injuries and classification of industrial accidents.
IS: 3996	Safety Code of scaffolds and ladders.
IS: 4082	Recommendation on stacking and storage of construction materials and components at site.
IS: 4770	Rubber gloves for electrical purposes
IS: 5121	Safety code for piling and other deep foundations
IS: 5216 (Part-I)	Recommendations on Safety procedures and practices in electrical works
IS: 5557	Industrial and Safety rubber lined boots.
IS: 5983	Eye protectors
IS:6519	Selection, care and repair of Safety footwear
IS: 6994 (Part-I)	Industrial Safety Gloves (Leather & Cotton Gloves)
IS: 7293	Safety Code for working with construction Machinery

IS: 8519	Guide for selection of industrial safety equipment for body protection
IS: 9167	Ear protectors
IS: 11006	Flash back arrestor (Flame arrestor)
IS:11016	General and safety requirements for machine tools and their operation
IS: 11057	Specification for Industrial safety nets
IS: 11226	Leather safety footwear having direct moulded rubber sole
IS: 11972	Code of practice for safety precaution to be taken when entering a sewerage system
IS: 13367	Code of practice-safe use of cranes
IS: 13416	Recommendations for preventive measures against hazards at working place

B. INTERNATIONAL STANDARDS ON HSE

Safety Glasses	:	ANSI Z 87.1, ANSI ZZ 87.1, AS 1337, BS 2092, BS 1542, BS 679, DIN 4646 / 58211
Safety Shoes	:	ANSI Z 41.1, AS 2210, EN 345
Hand Gloves	:	BS 1651
Ear Muffs	:	BS 6344, ANSI S 31.9
Hard Hat	:	ANSI Z 89.1 / 89.2, AS 1808, BS 5240, DIN 4840
Goggles	:	ANSI Z 87.1
Face Shield	:	ANSI Z 89.1
Breathing Apparatus	:	BS 4667, NIOSH
Welding & Cutting	:	ANSI Z 49.1
Safe handling of compressed Gases in cylinders	:	P-1 (Compressed Gas Association 1235 Jefferson Davis Highway, Arlington VA 22202 – USA)

ANNEXURE-B

DETAILS OF FIRST AID BOX

SL. NO	DESCRIPTION	*QUANTITY*
1.	Small size Roller Bandages, 1 inch wide (Finger Dressing small)	6 Pcs.
2.	Medium size Roller Bandages, 2 inch wide (Hand and Foot Dressing)	6 Pcs.
3.	Large size Roller Bandages, 4 inch wide (Body Dressing Large)	6 Pcs.
4.	Large size Burn Dressing (Burn Dressing Large)	4 Pkts.
5.	Cotton wool (20 gms packing)	4 Pkts.
6.	Antiseptic Solution Dettol (100 ml.) or Savlon	1 Bottle
7.	Mercurochrome Solution (100 ml.) 2% in water	1 Bottle
8.	Ammonia Solution (20 ml.)	1 Bottle
9.	A Pair of Scrissors	1 Piece
10.	Adhesive Plaster (1.25 cm x 5 m)	1Spool
11.	Eye pads in Separate Sealed Packet	4 Pcs.
12.	Tourniqut	1 No.
13.	Safety Pins	1 Dozen
14.	Tinc. Iodine / Betadin (100 ml.)	1 Bottles
15.	Ointment for burns (Burnol 20 gms.)	1 Bottole
16.	Polythene Wash cup for washing eyes	1 No.
17.	Potassium Permanganate (20 gms.)	1 Pkt.
18.	Tinc. Benzoine (100 ml.)	1 Bottole
19.	Triangular Bandages	2 Nos.
20.	Band Aid Dressing	5 Pcs.
21.	Iodex / Moov (25 gms.)	1 Bottole
22.	Tongue Depressor	1 No.
23.	Boric Acid Powder (20 gms.)	2 Pkt.
24.	Sodium Bicarbonate (20 gms.)	1 Pkt.
25.	Dressing Powder (Nebasulf) (10 gms.)	1 Bottole
26.	Medicinal Glass	1 No.
27.	Duster	1 No.
28.	Booklet (English & Local Language)	1 No. each
29.	Soap	1 No.
30.	Toothache Solution	1 No.
31.	Eye Ointment	1 Bottle
32.	Vicks (22 gms.)	1 Bottle
33.	Forceps	1 No.
34.	Cotton Buds (5 nos.)	1 Pkt.
35.	Note Book	1 No.
36.	Splints	4 Nos.
37.	Lock	1 Piece
38.	Life Saving/Emergency/Over-the Counter Drugs	As decided at site
	Box size : 14” x 12” x 4”	

Note : The medicines prescribed above are only indicative. Equivalent medicines can also be used. A prescription, in this regard, shall be required from a qualified Physician.

ANNEXURE – C

TYPE OF FIRES VIS-À-VIS FIRE EXTINGUISHERS

Fire	Fire Extinguishers				
	Water	**Foam**	**CO_2**	**Dry Powder**	**Multi Purpose (ABC)**
Originated from paper, clothes, wood	√	√	Can control minor surface fires	Can control minor surface fires	√
Inflammable liquids like alcohol, diesel, petrol, edible oils, bitumen	x	√	√	√	√
Originated from gases like LPG, CNG, H_2	x	x	√	√	√
Electrical Fires	x	x	√	√	√

Legend : √ Can be used
x Not to be used

Note : Fire extinguishing equipment must be checked atleast once a year and after every use by an authorized person. The equipment must have an inspection label on which the next inspection date is giver:. Type of extinguisher shall clearly be marked on it.

ANNEXURE – D

Indicative List of Statutory Acts & Rules Relating to HSE

- The Indian Explosives Act and Rules
- The Motor Vehicle Act and Central Motor Vehicle Rules
- The Factories Act and concerned Factory Rules
- The Petroleum Act and Petroleum Rules
- The Workmen Compensation Act
- The Gas Cylinder Rules and the Static & Mobile Pressure Vessels Rules.
- The Indian Electricity Act and Rules
- The Indian Boiler Act and Regulations
- The Water (Prevention & Control & Pollution) Act
- The Water (Prevention & Control of Pollution) Cess Act
- The Mines & Minerals (Regulation & Development) Act
- The Air (Prevention & Control of Pollution) Act
- The Atomic Energy Act
- The Radiation Protection Rules
- The Indian Fisheries Act
- The Indian Forest Act
- The Wild Life (Protection) Act
- The Environment (Protection) Act and Rules
- The Hazardous Wastes (Management & Handling) Rules
- The Manufacturing, Storage & import of Hazardous Chemicals Rules
- The Public Liability Act
- The Building and Other Construction Workers (Regulation of Employment and Condition of service) Act
- Other statutory acts Like EPF, ESIS, Minimum Wage Act.

ANNEXURE – E

CONSTRUCTION HAZARDS, THEIR EFFECTS & PREVENTIVE MEASURES

ACTIVITY	*TYPE OF HAZARD*	EFFECT OF HAZARD	PREVENTIVE MEASURES
(A) EXCAVATION Pit Excavation up to 3.0m	➢ Falling into pit	➢ Personal injury	➢ Provide guard rails/barricade with warning signal. ➢ Provide at least two entries/exits. ➢ Provide escape ladders.
	➢ Earth Collapse	➢ Suffocation / Breathlessness ➢ Buried	➢ Provide suitable size of shoring and strutting, if required. ➢ Keep soil heaps away from the edge equivalent to 1.5m or depth of pit whichever is more. ➢ Don't allow vehicles to operate too close to excavated areas. Maintain at least 2m distance from edge of cut. ➢ Maintain sufficient angle of repose. Provide slope not less than 1:1 and suitable bench of 0.5m width at every 1.5m depth of excavation in all soils except hard rock. ➢ Battering/benching the sides.
	➢ Contact with buried electric cables ➢ Gas/ Oil Pipelines	➢ Electrocution ➢ Explosion	➢ Obtain permission from competent authorities, prior to excavation, if required. ➢ Locate the position of buried utilities by referring to plant drawings. ➢ Start digging manually to locate the exact position of buried utilities and thereafter use

ACTIVITY	TYPE OF HAZARD	EFFECT OF HAZARD	PREVENTIVE MEASURES
			mechanical means.
Pit Excavation beyond 3.0m	➢ Same as above plus ➢ Flooding due to excessive rain/ underground water	➢ Can cause drowning situation	➢ Prevent ingress of water ➢ Provide ring buoys ➢ Identify and provide suitable size dewatering pump or well point system
	➢ Digging in the vicinity of existing Building/ Structure	➢ Building/ Structure may collapse ➢ Loss of health & wealth	➢ Obtain prior approval of excavation method from local authorities ➢ Use under-pining method ➢ Construct retaining wall side by side
	➢ Movement of vehicles / equipments close to the edge of cut.	➢ May cause cave-in or slides ➢ Persons may get buried	➢ Barricade the excavated area with proper lighting arrangements ➢ Maintain at least 2m distance from edge of cut and use stop block to prevent over-run. ➢ Strengthen shoring and strutting
Narrow deep excavations for pipelines, etc.	➢ Same as above plus ➢ Frequent cave-in or slides	➢ May cause severe injuries or prove fatal	➢ Battering/benching of sides ➢ Provide escape ladders
	➢ Flooding due to Hydrostatic testing	➢ May arise drowning situation	➢ Same as above plus ➢ Bail out accumulated water ➢ Maintain adequate ventilation
Rock excavation by blasting	➢ Improper handling of explosives	➢ May prove fatal	➢ Ensure proper storage, handling & carrying of explosives by trained personnel. ➢ Comply with the applicable explosive acts & rules.
	➢ Uncontrolled explosion	➢ May cause severe injuries or prove fatal	➢ Allow only authorized persons to perform blasting operations. ➢ Smoking and open

ACTIVITY	TYPE OF HAZARD	EFFECT OF HAZARD	PREVENTIVE MEASURES
			flames are to be strictly prohibited.
	➢ Scattering of stone pieces in atmosphere	➢ Can hurt people	➢ Use PPE like goggles, face mask, helmets etc.
Rock excavating by blasting (Contd)	➢ Entrapping of persons/ animals.	➢ May cause severe injuries or prove fatal	➢ Barricade the area with red flags and blow siren before blasting.
	➢ Misfire	➢ May explode suddenly	➢ Do not return to site for at least 20 minutes or unless announced safe by designated person.
Piling Work	➢ Failure of pile-driving equipment	➢ Can hurt people	➢ Inspect Piling rigs and pulley blocks before the beginning of each shift.
	➢ Noise pollution	➢ Can cause deafness ➢ and psychological imbalance	➢ Use personal protective equipments like ear plugs, muffs, etc.
	➢ Extruding rods / casing	➢ Can hurt people	➢ Barricade the area an install sign boards ➢ Provide first-aid
	➢ Working in the vicinity of 'Live-Electricity'	➢ Can cause electrocution / asphyxiation	➢ Keep sufficient distance from Live-Electricity as per IS code. ➢ Shut off the supply, if possible ➢ Provide artificial/rescue breathing to he injured.
(B) CONCRETING	➢ Air pollution by cement	➢ May affect Respiratory System	➢ Wear respirators or cover mouth and nose with wet cloth.
	➢ Handling of ingredients	➢ Hand s may get injured	➢ Use gloves and other PPE.
	➢ Protruding reinforcement rods.	➢ Feet may get injured	➢ Use Safety shoes. ➢ Provide platform above reinforcement for movement of workers.
	➢ Earthing of electrical mixers,	➢ Can cause electrocution / asphyxiation	➢ Ensure earthing of equipments and proper functioning of

ACTIVITY	TYPE OF HAZARD	EFFECT OF HAZARD	PREVENTIVE MEASURES
	vibrators, etc. not done		electrical circuit before commencement of work.
	➢ Falling of materials from height	➢ Persons may get injured	➢ Use hard hats ➢ Remove surplus material immediately from work place ➢ Ensure lighting arrangements during night hours.
	➢ Continuous pouring by same gang	➢ Cause tiredness of workers and may lead to accident.	➢ Insist on shift pattern ➢ Provide adequate rest to workers between subsequent pours.
	➢ Revolving or concrete mixer/ vibrators	➢ Parts of body or clothes may get entrapped.	➢ Allow only mixers with hopper ➢ Provide safety cages around moving motors ➢ Ensure proper mechanical locking of vibrator
Super-structure	➢ Same as above plus ➢ Deflection in props or shuttering material	➢ Shuttering / props may collapse and prove fatal	➢ Avoid excessive stacking on shuttering material ➢ Check the design and strength of shuttering material before commencement of work ➢ Rectify immediately the deflection noted during concreting
	➢ Passage to work place	➢ Improperly tied and designed props / planks may collapse	➢ Ensure the stability and strength of passage before commencement of work ➢ Do not overload and under the passage.
(C) REINFORCEMENT	➢ Curtailment and binding of rods	➢ Persons may get injured	➢ Use PPE like gloves, shoes, helmets, etc. ➢ Avoid usage of shift tools
	➢ Carrying of rods for short distance/ at	➢ Workers may injure their hands and shoulders	➢ Provide suitable pads on shoulders and use safety

ACTIVITY	TYPE OF HAZARD	EFFECT OF HAZARD	PREVENTIVE MEASURES
	heights		gloves. ➢ Tie up rods in easily liftable bundles ➢ Ensure proper staging.
	➢ Checking of clear distance/ cover with hands	➢ Rods may cut or injure the finger	➢ Use measuring devices tape, measuring rods, etc.
	➢ Hitting projected rods and standing on cantilever rods	➢ Persons may get injured and fall down	➢ Use safety shoes and avoid standing unnecessarily on cantilever rods ➢ Avoid wearing loose clothes
	➢ Falling of material from height	➢ May prove fatal	➢ Use helmets ➢ Provide safety nets
	➢ Transportation of rods by trucks / trailers	➢ Protruded rods may hit the persons	➢ Use red flags/lights at the ends ➢ Do not protrude the rods in front of or by the side of driver's cabin. ➢ Do not extend the rods 1/3rd of deck length or 1.5 m which is less
(D) WELDING AND GAS CUTTING	➢ Welding radiates invisible ultraviolet and infrared says	➢ Radiation can damage eyes and skin.	➢ Use specified shielding devices and other PPE of correct specifications ➢ Avoid throated tungsten electrodes for GTAW.
	➢ Improper placement of oxygen and acetylene cylinders	➢ Explosion may occur	➢ Move out any leaking cylinder ➢ Keep cylinder in vertical position ➢ Use trolley for transportation of cylinders and chain them ➢ Use flash back arrestors
	➢ Leakage / cuts in hoses	➢ May cause fire	➢ Purge regulators immediately and then turn off ➢ Never use grease or

ACTIVITY	*TYPE OF HAZARD*	EFFECT OF HAZARD	PREVENTIVE MEASURES
			oil on oxygen line connections and copper fittings on acetylene lines ➢ Inspect regularly gas carrying hoses ➢ Always use red hose for acetylene & other fuel gases and black for oxygen.
	➢ Opening-up of cylinder	➢ Cylinder may burst	➢ Always stand back from the regulator while opening the cylinder ➢ Turn valve slowly to avoid bursting ➢ Cover the lug terminals to prevent short circuiting.
	➢ Welding of tanks, container or pipes storing flammable liquids	➢ Explosion may occur	➢ Empty & purge them before welding ➢ Never attach the ground cable to tanks, container or pipe storing flammable liquids ➢ Never use LPG for gas cutting
(E) RADIOGRAPHY	➢ Ionizing Radiation	➢ Radiations may react with the skin and can cause cancer, skin irritation, dermatitis, etc.	➢ Ensure safety regulations as per BARC/AERB before commencement of job. ➢ Cordon off the area and install Radiation warning symbols ➢ Restrict the entry of unauthorized persons ➢ Wear appropriate PPE and film badges issued by BARC/AERB
	➢ Transportation and Storage of Radiography source	➢ Same as above	➢ Never touch or handle radiography source with hands ➢ Store radiography source inside a pit in an exclusive isolated

ACTIVITY	*TYPE OF HAZARD*	EFFECT OF HAZARD	PREVENTIVE MEASURES
			storage room with lock and key arrangement. The pit should be approved by BARC/AERB ➢ Radiography source should never be carried either in passenger bus or in a passenger compartment of trains. ➢ BARC/AERB have to be informed before source movement. ➢ Permission from Director General of Civil Aviation is required for booking radio isotopes with airlines.
	➢ Loss of Radio isotope	➢ Same as above	➢ Try to locate with the help of Survey Meter. ➢ Inform BARC/AERB(*) (*) Atomic Energy Regulatory Board (AERB), Bhabha Atomic Research Centre (BARC) Anushaktinagar, Mumbai – 400 094
(F) ELECTRICAL INSTALLATION AND USAGE	➢ Short circuiting	➢ Can cause Electrocution or Fire	➢ Use rubberized hand gloves and other PPE ➢ Don't lay wires under carpets, mats or door ways. ➢ Allow only licensed electricians to perform on electrical facilities ➢ Use one socket for one appliance ➢ Ensure usage of only fully insulated wires or cables ➢ Don't place bare wire ends in a socket

ACTIVITY	*TYPE OF HAZARD*	EFFECT OF HAZARD	PREVENTIVE MEASURES
			➢ Ensure earthing of machineries and equipments ➢ Do not use damaged cords and avoid temporary connections ➢ Use spark-proof/flame proof type field distribution boxes. ➢ Do not allow open/bare connections ➢ Provide all connections through ELCB ➢ Protect electrical cables / equipment's from water and naked flames ➢ Check all connections before energizing.
	➢ Overloading of Electrical System	➢ Bursting of system can occur which leads to fire	➢ Display voltage and current ratings prominently with 'Danger' signs. ➢ Ensure approved cable size, voltage grade and type. ➢ Switch off the electrical utilities when not in use. ➢ Do not allow unauthorized connections. ➢ Ensure proper grid wise distribution of Power.
	➢ Improper laying of overhead and underground transmission lines / cables	➢ Can cause electrocution and prove fatal	➢ Do not lay unarmored cable directly on ground, wall, roof of trees ➢ Maintain at least 3m distance from HT cables ➢ All temporary cables should be laid at least 750 mm below ground on 100 mm

ACTIVITY	TYPE OF HAZARD	EFFECT OF HAZARD	PREVENTIVE MEASURES
			fine sand overlying by brick soling ➢ Provide proper sleeves at crossings/ intersections ➢ Provide cable route markers indicating the type and depth of cables at intervals not exceeding 30m and at the diversions / termination.
(G) FIRE PREVENTION AND PROTECTION	➢ Small fires can become big ones and may spread to the surrounding areas	➢ Cause burn injuries and may prove fatal.	➢ In case a fire breaks out, press fire alarm system and shout “Fire, Fire” ➢ Keep buckets full of sand & water/fire extinguishing equipment near hazardous locations ➢ Confine smoking to ‘Smoking Zones’ only ➢ Train people for using specific type of fire equipments under different classes of fire ➢ Keep fire doors/ shutters, passages and exit doors unobstructed ➢ Maintain good house keeping and first-aid boxes (for detail refer Annex-2) ➢ Don’t obstruct assess to Fire extinguishers ➢ Do not use elevators for evacuation during fire ➢ Maintain lightening arrestors for elevated structures ➢ Stop all electrical motors with internal combustion. ➢ Move the vehicles from dangerous

ACTIVITY	*TYPE OF HAZARD*	EFFECT OF HAZARD	PREVENTIVE MEASURES
			locations. ➢ Remove the load hanging from the crane booms. ➢ Remain out of the danger areas.
	➢ Improper selection of Fire Extinguisher	➢ It may not extinguish the fire	➢ Ensure usage of correct fire extinguisher meant for the specified fire (for details refer Appendix-C) ➢ Do not attempt to extinguish Oil and electric fires with water. Use foam cylinders/CO_2/sand or earth.
	➢ Improper storage of highly inflammable substances	➢ Same as above	➢ Maintain safe distance of flammable substances from source of ignition ➢ Restrict the distribution of flammable materials to only min. necessary amount ➢ Construct specifically designed fuel storage facilities ➢ Keep chemicals in cool and dry place away from hat. Ensure adequate ventilation ➢ Before welding operation, remove or shield the flammable material properly ➢ Store flammable materials in stable racks, correctly labeled preferably with catchments trays. ➢ Wipe off the spills immediately

ACTIVITY	TYPE OF HAZARD	EFFECT OF HAZARD	PREVENTIVE MEASURES
	➢ Short circuiting of electrical system	➢ Same as above ➢ Can cause Electrocution	➢ Don't lay wires under carpets, mats or door ways ➢ Use one socket for one appliance ➢ Use only fully insulated wires or cables ➢ Do not allow open/bare connections ➢ Provide all connections through ELCB ➢ Ensure earthing of machineries and equipments
(H) VEHICULAR MOVEMENT	➢ Crossing the Speed Limits (Rash driving)	➢ Personal injury	➢ Obey speed limits and traffic rules strictly ➢ Always expect the unexpected and be a defensive drive ➢ Use sat belts/helmets ➢ Blow horn at intersections and during overtaking operations. ➢ Maintain the vehicle in good condition ➢ Do not overtake on curves, bridges and slopes
	➢ Adverse weather condition	➢ Same as above	➢ Read the road ahead and ride to the left ➢ Keep the wind screen and lights clean ➢ Do not turn at speed ➢ Recognize the hazard, understand the defense and act correctly in time.
	➢ Consuming alcohol before and during he	➢ Same as above	➢ Alcohol and driving do not mix well. Either choose

ACTIVITY	TYPE OF HAZARD	EFFECT OF HAZARD	PREVENTIVE MEASURES
	driving operation		alcohol or driving. ➢ If you have a choice between hitting a fixed object or an oncoming vehicle, hit the fixed object ➢ Quit the steering at once and become a passenger. Otherwise take sufficient rest and then drive. ➢ Do not force the driver to drive fast and round the clock ➢ Do not day dram while driving
	➢ Falling objects / Mechanical failure	➢ May prove fatal	➢ Ensure effective braking system, adequate visibility for the drives, reverse warning alarm. ➢ Proper maintenance of the vehicle as per manufacturer instructions
(I) PROOF TESTING (HYDROSTATIC/ PNEUMATIC TESTING	➢ Bursting of piping ➢ Collapse of tanks ➢ Tanks flying off	➢ May cause injury and prove fatal	➢ Prepare test procedure & obtain CONSULTANT/ Owner's approval ➢ Provide separate gauge for pressurizing pump and piping/equipment ➢ Check the calibration status of all pressure gauges, dead weight testers and temperature recorders ➢ Take dial readings at suitable defined intervals and ensure most of them fall between 40-60% of the gauge scale range ➢ Provide safety relief valve (set at

ACTIVITY	*TYPE OF HAZARD*	EFFECT OF HAZARD	PREVENTIVE MEASURES
			pressure slightly higher than test pressure) while testing with air/nitrogen ➢ Ensure necessary precautions, stepwise increase in pressure, tightening of bolts/ nuts, grouting, etc. before and during testing ➢ Keep the vents open before opening any valve while draining out of water used for hydro testing of tanks ➢ Pneumatic testing involves the hazard of released energy shored in compressed gas. Specific care must therefore be taken to minimize the chance of brittle failure during a pneumatic leak test. Test temperature is important in this regard and must be considered when the designer chooses the material of construction ➢ A pressure relief device shall be provided, having a set pressure not higher than the test pressure plus the lesser of 345 KPa (50 psi) or 10% of he test pressure. The gas used as test fluid, if not air, shall be nonflammable and nontoxic.
(J) WORKING AT HEIGHTS	➢ Person can fall down	➢ May sustain severe injuries or	➢ Provide guard rails/barricade at the

ACTIVITY	*TYPE OF HAZARD*	EFFECT OF HAZARD	PREVENTIVE MEASURES
		prove fatal	work place ➢ Use PPE like safety belts, full body harness, life line, helmets, safety shoes, etc. ➢ Obtain a permit before starting the work at height above 3 meters ➢ Fall arrest systems like safety nets, etc. must be installed ➢ Provide adequate working space (min. 0.6 m) ➢ Tie/weld working platform with fixed support ➢ Use roof top walk ladder while working on a slopping roofs ➢ Avoid movement on beams
		➢ May hit the scrap / material stacked at the ground or in between	➢ Keep the work place neat and clean ➢ Remove the scrap immediately
	➢ Material can fall down	➢ May hit the workers working at lower levels and prove fatal.	➢ Same as above plus ➢ Do not throw or drop material or equipment from height ➢ All tools to be carried in a toolkit bags or on working uniform ➢ Remove scrap from the planks ➢ Ensure wearing of helmet by the workers at low level
(K) CONFINED SPACES	➢ Suffocation / drowning	➢ Unconsciousness, death	➢ Use respiratory devices, if required ➢ Avoid over crowding inside a confined space ➢ Provide Exhaust Fans for ventilation ➢ Do not wear loose clothes, neck ties,

ACTIVITY	*TYPE OF HAZARD*	EFFECT OF HAZARD	PREVENTIVE MEASURES
			etc. ➢ Fulfill conditions of the permit. ➢ Check for presence of hydrocarbons, O_2 level ➢ Obtain work permit before entering a confined space ➢ Ensure that the connected piping of the equipment which is to be opened is pressure free, fluid has been drained, vents are open and piping is positively isolated by a blind flange
	➢ Presence of foul smell and toxic substances	➢ Inhalation can pose threat to life.	➢ Same as above plus ➢ Check for hydrocarbon and Aromatic compounds before entering a confined space ➢ Depute one person outside the confined space for continuous monitoring and for extending help in case of an emergency
	➢ Ignition / flame can cause fire	➢ Person may sustain burn injuries or explosion may occur	➢ Keep fire extinguishers at a hand distance ➢ Remove surplus material and scrap immediately ➢ Do not smoke inside a confined space ➢ Do not allow gas cylinders inside a confined space ➢ Use low voltage (24V) lamps for lighting ➢ Use tools with air motors or electric tools with max.

ACTIVITY	*TYPE OF HAZARD*	EFFECT OF HAZARD	PREVENTIVE MEASURES
			voltage of 24V ➢ Remove all equipments at the end of the day
(L) HANDLING AND LIFTING EQUPMENTS	➢ Failure of load lifting and moving equipments	➢ Can cause accident and prove fatal	➢ Avoid standing under the lifted load and within the operating radius of cranes ➢ Check periodically oil, brakes, gears, horns and tyre pressure of all moving machinery ➢ Check quality, size and condition of all chain pulley blocks, slings, U-clamps, D-shackles, wire ropes, etc. ➢ Allow crane to move only on hard, firm and leveled ground ➢ Allow lifting slings as short as possible and check gunny packings at the friction points ➢ Do not allow crane to tilt its boom while moving ➢ Install Safe Load Indicator ➢ Ensure certification by applicable authority.
	➢ Overloading of lifting equipments	➢ Can cause electrocution and fire	➢ Safe lifting capacity of derricks and winches written on them shall be got verified. ➢ The max safe working load shall be marked on all lifting equipments ➢ Check the weight of columns and other heavy items painted on them and accordingly decide about the crane

ACTIVITY	TYPE OF HAZARD	EFFECT OF HAZARD	PREVENTIVE MEASURES
			capacity, boom and angle of erection ➢ Allow only trained operators and riggers during crane operation
	➢ Overhead electrical wires	➢ Can cause electrocution and fire	➢ Do not allow boom or other parts of crane to come within 3 m reach of overhead HT cables ➢ Hook and load being lifted shall preferably remain in full visibility of crane operator.
(M) SCAFFOLDING, FORMWORK AND LADDERS	➢ Person can fall down	➢ Person may sustain severe injuries and prove fatal	➢ Provide guard rails for working at height ➢ Face ladder while climbing and use both hands ➢ Ladders shall extend about 1m above landing for easy access and tying up purpose ➢ Do not place ladders against movable objects and maintain base at ¼ unit of the working length of the ladder ➢ Suspended scaffolds shall not be less than 500 mm wide and tied properly with ropes ➢ No loose planks shall be allowed ➢ Use PPE, like helmets, safety shoes, etc.
	➢ Failure of scaffolding material	➢ Same as above	➢ Inspect visually all scaffolding materials for stability and anchoring with permanent structures. ➢ Design scaffolding

ACTIVITY	TYPE OF HAZARD	EFFECT OF HAZARD	PREVENTIVE MEASURES
			for max. load carrying capacity ➢ Scaffolding planks shall not be less than 50x250 mm full thickness lumber or equivalent. These shall be cleared or secured and must extend over the end supports by at least 150mm and not more that 300 mm ➢ Don't overload the scaffolds ➢ Do not splice short ladders to make a longer one. Vertical ladders shall not exceed 6m.
	➢ Material can fall down	➢ Persons working at lower level gets injured.	➢ Remove excess material and scrap immediately ➢ Carry the tools in a tool-kit bag only ➢ Provide safety nets
(N) STRUCTURAL WORKS	➢ Personal negligence and danger of fall	➢ Can cause injury or casualty	➢ Do not take rest inside rooms built for welding machines or electrical distribution system ➢ Avoid walking on beams at height ➢ Wear helmet with chin strap and safety belts when working at height ➢ Use hand gloves and goggles during grinding operations ➢ Cover or mark the sharp and projected edges ➢ Do not stand within the operating radius of cranes
	➢ Lifting / slipping of	➢ Same as above	➢ Do not stand under the lifted load

ACTIVITY	*TYPE OF HAZARD*	EFFECT OF HAZARD	PREVENTIVE MEASURES
	material		➢ Stack properly all the materials. Avoid slippage during handling ➢ Control longer pieces lifted up by cranes from both ends ➢ Remove loose materials from height ➢ Ensure tightening of all nuts and bolts
(O) PIPELINE WORKS	➢ Erection / lowering failure	➢ Can cause injury	➢ Do not stand under the lifted Load ➢ Do not allow any person to come within the radii of the side boom handling pipes ➢ Check the load carrying capacity of the lifting tools and tackles ➢ Use safe Load Indicators ➢ Use appropriate PPEs
	➢ Other	➢ Same as above	➢ Wear gum boots in marshy areas ➢ Allow only one person to perform signaling operations while lowering of pipes ➢ Provide night caps on pipes ➢ Provide end covers on pipes for stoppage of pigs while testing/cleaning operations.

FORMAT NO. : HSE-1, REV. 0

HSE CHECKLIST CUM COMPLIANCE REPORT (1/6)

Project: _____ Contractor :_____
Date: _____ Owner :_____
Inspection By:_____ Report No. :_____
Frequency : Fortnightly Job No :_____

Note: write 'NA' wherever the item is not applicable

SL. NO.	ITEM	YES	NO	REMARKS	ACTION
1	**HOUSEKEEPING**				
a)	Waste containers provided and used				
b)	Sanitary facilities adequate and clean				
c)	Passageways and Walkways clear				
d)	General neatness of working areas				
e)	Others				
2	**PERSONNEL PROTECTIVE EQUIPMENT**				
a)	Goggles; Shields				
b)	Face protection				
c)	Hearing protection				
d)	Safety shoes				
e)	Hand protection				
f)	Respiratory Masks etc.				
g)	Safety Belts				
h)	Safety Helmet/Hard Hat				
I)	Others				
3	**EXCAVATIONS/OPENINGS**				
a)	Openings properly covered or barricaded				
b)	Excavations shored				
c)	Excavations barricaded				
d)	Overnight lighting provided				
e)	Others				
4	**WELDING & GAS CUTTING**				
a)	Gas cylinders chained upright				
b)	Cables and hoses not obstructing				
c)	Screens or shields used				
d)	Flammable materials protected				
e)	Fire extinguisher(s) accessible				
f)	Others				
5	**SCAFFOLDING**				
a)	Fully decked platforms				
b)	Guard and intermediate rails in place				

SL. NO.	ITEM	YES	NO	REMARKS	ACTION
c)	Toe boards in place				
d)	Adequate shoring				
e)	Adequate access				
f)	Others				
6	**LADDERS**				
a)	Extension side rails 1m above				
b)	Top of landing				
c)	Properly secured				
d)	Angle + 70 from horizontal				
e)	Others				
7	**HOISTS, CRANES AND DERRICKS**				
a)	Condition of cables and sheaves OK				
b)	Condition of slings, chains, hooks and eyes OK				
c)	Inspection and maintenance logs maintained				
d)	Outriggers used				
e)	Signs/barricades provided				
f)	Signals observed and understood				
g)	Qualified operators				
h)	Others				
8	**MACHINERY, TOOLS AND EQUIPMENT**				
a)	Proper instruction				
b)	Safety devices				
c)	Proper cords				
d)	Inspection and maintenance				
e)	Others				
9	**VEHICLE AND TRAFFIC**				
a)	Rules and regulations observed				
b)	Inspection and maintenance				
c)	Licensed drivers				
d)	Others				
10	**TEMPORARY FACILITIES**				
a)	Emergency instructions posted				
b)	Fire extinguishers provided				
c)	Fire-aid equipment available				
d)	Secured against storm damage				
e)	General neatness				
f)	In accordance with electrical requirements				
g)	Others				
11	**FIRE PREVENTION**				
a)	Personnel instructed				
b)	Fire extinguishers checked				
c)	No smoking in Prohibited Areas				
d)	Hydrants Clear				

SL. NO.	ITEM	YES	NO	REMARKS	ACTION
e)	Others				
12	**ELECTRICAL**				
a)	Use of 3-core armoured cables				
b)	Usage of 'All insulated' or 'double insulated' electrical tools				
c)	All electrical connection are routed through ELCB				
d)	Natural Earthing at the source of power (main DB)				
e)	Continuity and tightness of earth conductor				
f)	Covering of junction boxes, panels and other energized wiring places				
g)	Ground fault circuit interrupters provided				
h)	Prevention of tripping hazards				
i)	Others				
13	**HANDLING AND STORAGE OF MATERIALS**				
a)	Properly stored or stacked				
b)	Passageways clear				
c)	Others				
14	**FLAMMABLE GASES AND LIQUIDS**				
a)	Containers clearly identified				
b)	Proper storage				
c)	Fire extinguishers nearby				
d)	Others				
15	**WORKING AT HEIGHT**				
a)	Erection plan and work permit obtained				
b)	Safety nets				
c)	Full body harness and lanyards; chute lines				
d)	Health Check record available for workers going up?				
e)	Others				
16	**CONFINED SPACE**				
a)	Work permit obtained				
b)	Test for toxic gas and sufficient availability of oxygen conducted				
c)	At least one person outside the confined space for monitoring deputed				
d)	Availability of sufficient means of entry, exit and ventilation				
e)	Fire extinguishers and first-aid facility ensured				
f)	Lighting provision made by using 24V lamps				
g)	Proper usage of PPEs ensured				
17	**RADIOGRAPHY**				
a)	Proper storage and handling of source as per BARC / AREB guidelines				
b)	Working permit obtained				
c)	Cordoning of the area done				

SL. NO.	ITEM	YES	NO	REMARKS	ACTION
d)	Use of appropriate PPE's ensured				
e)	Proper training to workers/supervisors imparted				
f)	Minimum occupancy of workplace ensured				
18	**HEALTH CHECKS**				
a)	Workers medically examined and found to fit for working : i) At heights ii) In confined space.				
b)	Availability of First-aid facilities				
c)	Proper sanitation at site, office and labour camps				
d)	Arrangement of medical facilities				
e)	Measures for dealing with illness				
f)	Availability of Portable drinking water for workmen & staff				
g)	Provision of crèches for children				
h)	Stand by vehicle available for evacuation of injured.				
19	**ENVIRONMENT**				
a)	Chemical and other effluents properly disposed				
b)	Cleaning liquid of pipes disposed off properly				
c)	Seawater used for hydro-testing disposed off as per agreed procedure				
d)	Lubricant Waste/Engine oils properly disposed				
e)	Waste from Canteen, offices, sanitation etc. disposed properly				
f)	Disposal of surplus earth, stripping materials, oily rags and combustible materials done properly				
g)	Green belt protection				

Signature of Resident
Engineer with Seal

FORMAT NO. : HSE-2, REV. 0

ACCIDENT / INCIDENT REPORT

(To be submitted by Contractor after every Accident / Incident within 24 hours)

Report No:_____
Date: _____

Name of Site:-_____
CONTRACTOR_____

Type of Accident / Incident : ☐ Fatal ☐ Other Lost Time ☐ Non Loss Time ☐ First-Aid case

NAME OF THE INJURED……
AGE …….
FATHER'S NAME……..
SUB-CONTRACTOR M/S……..
DATE & TIME OF ACCIDENT…….
LOCATION ……

BRIEF DESCRIPTION OF ACCIDENT

CAUSE OF ACCIDENT

NATURE OF INJURY/DAMAGE

MEDICAL AID PROVIDED/ACTIONS TAKEN

INTIMATION TO LOCAL AUTHORITIES (IF APPLICABLE)

DATE: SIGNATURE OF CONTRACTOR WITH SEAL

To : OWNER…….. 1 COPY
: RCM/SITE-IN-CHARGE, MECON 3 COPIES

→ Divisional Head (Constn.) through RCM
→ Project Manager MECON, through RCM

FORMAT NO. : HSE-3, REV. 0

SUPPLEMENTARY ACCIDENT / INCIDENT INVESTIGATION REPORT

Supplementary to Report No: _____(Copy enclosed)

Project:_____ Site:_____
Name of Work :_____ Date:_____
Contractor:_____ Work Order / LOI No. :_____

NAME OF THE INJURED …….
AGE : ……...
SUB-CONTRACTOR M/S……...
DATE & TIME OF ACCIDENT / INCIDENT ……
LOCATION……

BRIEF DESCRIPTION & CAUSE OF A ACCIDENT/ INCIDENT

NATURAL OF INJURY/DAMAGE

COMMENTS FROM MEDICAL PRACTITIONER WHO ATTENDED THE VICTIM/INJURED

SUGGESTED IMPROVEMENT IN THE WORKING CONDITION IF ANY

LOSS OF MANHOURS AND IMPACT ON SITE WORKS

ANY OTHER COMMENT BY SAFETY OFFICER.

DATE: SIGNATURE OF CONTRACTOR WITH SEAL

To : OWNER…….. 1 COPY
: RCM/SITE-IN-CHARGE, MECON 3 COPIES

→ Divisional Head (Constn.) through RCM
→ Project Manager MECON, through RCM

FORMAT NO. : HSE-4, REV. 0

NEAR MISS INCIDENT – SUGGESTED PROFORMA

Report No: _____

Name of Site :_____ Date :_____

Name of Work :_____ Contractor :_____

INCIDENT REPORTED BY :

DATE & TIME OF INCIDENT :

LOCATION :

BRIEF DESCRIPTION OF INCIDENT

PROBABLE CAUSE OF INCIDENT

SUGGESTED CORRECTIVE ACTION

STEPS TAKEN TO AVOID RECURRENCE YES ☐ NO ☐

DATE: SIGNATURE OF CONTRACTOR WITH SEAL

To : OWNER…….. 1 COPY
: RCM/SITE-IN-CHARGE, MECON 3 COPIES

→ Divisional Head (Constn.) through RCM
→ Project Manager MECON, through RCM

FORMAT NO. : HSE-5, REV. 0

MONTHLY HEALTH, SAFETY & ENVIRONMENT (HSE) REPORT
(To be submitted by each Contractor)

Actual work start Date:_____ For the Month of:_____
Project:_____ Report No:_____
Name of the Contractor:_____ Status as on:_____
Name of Work:_____ Name of Safety officer:_____

ITEM			UPTO PREVIOUS MONTH	THIS MONTH	CUMU-LATIVE
a)	Average number of Staff & Workmen (average daily headcount, not man days)				
b)	Manhours Worked				
c)	Number of HSE meeting organized at site				
d)	Number of HSE awareness programmes conducted at site				
e)	Number of Lost Time Accidents (LTA)	Fatal			
		Other LTA			
f)	Number of Loss time Injuries (LTI)	Fatalities			
		Other LTI			
g)	Number of Loss Time Accidents				
h)	Number of First Aid Cases				
i)	Number of Near Miss Incidents				
j)	Man-days lost due to accidents				
k)	LTA Free Manhours i.e. Number of LTA free manhours from the Lst LTA				
l)	Compensation cases raised with Insurance				
m)	Compensation case resolved and paid to workmen				
n)	Whether workmen compensation policy taken		Y/N		
o)	Whether workmen compensation policy valid		Y/N		
p)	Whether workmen registered under ESI Act		Y/N		
Remark					

DATE:

Safety Officer /Resident Engineer
(Signature and Name)

To : OWNER
: RCM/, MECON (2 COPIES)

FORMAT NO. : HSE-6, REV. 0

PERMIT FOR WORKING AT HEIGHT (ABOVE 2 METER)

Project Site : …… Sr. No.: ……
Name of the work: …… Date: ……
Name of Contractor : …….. Nature of Work : ……
Total No.of Workers: …….. Exact location of work : ……
Duration of work: from ..…… to ……

The following items have been checked and compliance shall be ensured during the currency of the permit:

Sl.	ITEM	DONE	NOT REQD.
1.	Equipment/Work Area inspected	☐	☐
2.	Considered hazard from other routine/non-routine operations and concerned person alerted	☐	☐
3.	ELCB provided	☐	☐
4.	Proper lighting provided	☐	☐
5.	Area cordoned off.	☐	☐
6.	Precautions against public traffic taken	☐	☐
7.	Sound Scaffolding provided	☐	☐
8.	Adequate protected Platform provided	☐	☐
9.	Acces and Exit to the area (Ladder properly fixed)	☐	☐
10.	Floor Openings covered	☐	☐
11.	Safety Net provided	☐	☐
12.	Heath check of personnel	☐	☐

A. Following personal protective equipment are provided (mark) and used as relevant Safety helmet/Gloves/Goggles/Shoes/Face Shield/Life Line/Safety Belt/Safety Harness.

B. This permit shall be available at the work site at all times.

C. Permit shall be issued for maximum one week only (Monday to Sunday).

D. This permit shall be applicable in non-operational areas.

E. After completion of the work, used permits shall be preserved for record purposes.

F. Additional precautions, if any …….

Permission is granted to work (See overleaf) = Yes/No

Name of Contractor's Supervisor (Initiator)

Name of Contractor's Safety Officer (Issuing Authority)

GRANT OF PERMIT AND EXTENSIONS

Sl. No.	Validity Period From …… To ……	Work time From …..Hrs. To …….Hrs.	Initiator (Supervisor of Contractor)	Issuing Authority (Safety Officer) of Contractor	Verification by CONSULTANT with date

Additional safety instructions, if any.

FORMAT NO. : HSE-7, REV. 0

CONFINED SPACE ENTRY PERMIT

Project Site : …… Sr. No.: ……
Name of the work: …… Date: ……
Name of Contractor : …….. Nature of Work : ……
Exact location of work : ……

Safety Requirements : POSITIVE ISOLATION OF THE VESSEL IS MANDATORY

(A) Has the equipment been ?

Y	NR		Y	NR		Y	NR	
☐	☐	isolated from power / steam / air	☐	☐	water flushed &/or steamed	☐	☐	radiation sources removed
☐	☐	isolated from liquid or gases	☐	☐	Manways open & ventilated	☐	☐	Proper lighting provided
☐	☐	depressurized &/or drained	☐	☐	cont. inset gas flow arranged	☐	☐	
☐	☐	blanked / blinded / disconnected	☐	☐	adequately cooled	☐	☐	

(B) Expected Residual Hazards

Y	NR		Y	NR		Y	NR	
☐	☐	lack of O_2	☐	☐	combustible gas / liquid	☐	☐	H_2S / toxic gases
☐	☐	corrosive chemicals	☐	☐	pyrophoric iron / scales	☐	☐	electricity / static
☐	☐	Heat / stream / frost	☐	☐	high humidity	☐	☐	ionizing radiation
☐	☐		☐	☐		☐	☐	

(C) Protective Measures

Y	NR		Y	NR		Y	NR	
☐	☐	gloves	☐	☐	ear plug / muff	☐	☐	goggles / face shield
☐	☐	protective clothing	☐	☐	dust / gas / air line mask	☐	☐	personal gas alarm
☐	☐	Grounded air educater / blower / AC	☐	☐	attendant with SCBA / air mask	☐	☐	rescue equipment / team
☐	☐	Fire fighting arrangements	☐	☐	safety harness & lifeline	☐	☐	communication equipment
☐	☐		☐	☐		☐	☐	

Authorization / Renewal (It is safe to enter the confirmed space)

Date	No. of Persons Allowed	Name of Persons allowed	Signature		Time		Signature
			Contractor's Supervisor	Contractor's Safety Officer	From	To	Workman

Permit Closure :

(A) Entry □ was closed □ stopped □ will continue on

(B) □ Site left in a safe condition
□ Housekeeping done

(C) Multi lock □ removed □ key transferred
□ Ensured all men have come out □ Manways barricaded

Remarks, if any :

FORMAT NO. : HSE-8, REV. 0

RADIATION WORK PERMIT

Project : Sr. No.:

Name of the work : Date:

Name of Contractor : Job No. :

Location of work :

Source Strength :

Cordoned distance (m) :

Name of Radiographing agency : Approved by Owner / MECON ☐

The following items have been checked & compliance shall be ensured during currency of the permit :

S. No.	Item Description	Done
1.	Safety regulations as per BARC/AERB ensured while source in use/ in transit & during storage.	☐
2.	Area cordoned off.	☐
3.	Lighting arrangements for working during nights ensured.	☐
4.	Warning signs / flash lights installed.	☐
5.	Cold work permit taken (if applicable)	☐
6.	PPEs like film badges, dosimeters used.	☐

Additional precautions, if any _____

(Radiography Agency's BARC / AREB authorized Supervisor) (Contractor's Safety Officer)

Permission is granted.

Permit is valid from _____ AM/PM _____ Date to _____ AM/PM _____ Date

(Signature of permit issuing authority)

Name : Designation : Date :

Permit renewal :

Permit extended upto		Additional precautions required, if any.	Sign of issuing authority with date
Date	Time		

Work completed / stopped / area cleared at _____ Hrs. of Date _____

(Sign of permit issuing authority)
Name :

FORMAT NO. : HSE-9, REV. 0

RADIATION WORK PERMIT

Project : Sr. No.:

Name of the work : Date:

Name of Contractor : Job No. :

Name of Contractor :

Line No. / Equipment No. /Structure to be dismantled :

Location details of dismantling / demolition with sketch : (Clearly indicate the area)

The following items have been checked & compliance shall be ensured during currency of the permit :

S. No.	Item Description	Done	Not Applicable
1.	Services like power, gas supply, water, etc. disconnected.	☐	☐
2.	Dismantling / Demolishing method reviewed & approved.	☐	☐
3.	Usage of appropriate PPEs ensured.	☐	☐
4.	Precautions taken for neighboring structures	☐	☐
5.	First-Aid arrangements made	☐	☐
6.	Fire fighting arrangements ensured	☐	☐
7.	Precautions taken for blasting	☐	☐

(Contractor's Supervisor) (Contractor's Safety Officer)

Permission is granted.

(Permit issuing authority)
Name :
Date :

Completion Report :

Dismantling / Demolishing is completed on _____ Date at _____ Hrs.

Materials / debris transported to identified location ☐

Tagging completed (as applicable) ☐

Services like power, gas supply, water, etc. restored ☐

(Permit issuing authority)

Edition : 1

SPECIFICATION
FOR
QUALITY ASSURANCE SYSTEMS
REQUIREMENTS

SPECIFICATION NO.: MEC/S/05/21/66

(OIL & GAS SBU)
MECON LIMITED
DELHI 110 092

CONTENTS

Sl.No.	Description
1.0	INTRODUCTION
2.0	DEFINITIONS
3.0	CONTRACTORS SCOPE OF WORK
4.0	QUALITY ASSURANCE REQUIREMENTS
FORMAT FOR QUALITY PLAN	FORMAT 00001
FORMAT FOR OBSERVATION ON	FORMAT 00002

1.0 INTRODUCTION

This specification establishes the Quality Assurance Requirements to be met by the sub-contractors (including turnkey Contractors) and their sub-vendors.

In case of any conflict between this specification and other provisions of the contract/ purchase order, the same shall be brought to the notice of MECON, at the stage of bidding and shall be resolved with MECON, prior to the placement of order.

2.0 DEFINITION

Bidder

For the purpose of this specification, the word “Bidder” means the person(s), firm, company or organisation who is under the process of being contracted by MECON/ Owner for delivery of some products (including service). The word is considered synonymous to supplier, contractor or vendor.

Correction

Action taken to eliminate the detected non-conformity.

Refers to repair, rework or adjustment and relates to the disposition of an existing non-conformity.

Corrective Action

Action taken to eliminate the causes of an existing non-conformity, defect or other undesirable situation in order to prevent recurrence.

Preventive Action

Action taken to eliminate the causes of a potential non-conformity, defect or other undesirable situation in order to prevent its recurrence.

Process

Set of inter-related resources and activities which transform inputs into outputs.

Special Process

Processes requiring pre-qualification of their process capability.

3.0 CONTRACTORS SCOPE OF WORK

3.1 Prior to award of contract

The bidder shall understand scope of work, drawings, specifications and standards etc., attached to the tender/ enquiry document, before he makes an offer.

The bidder shall submit milestone chart showing the time required for each milestone activity and linkages between different milestone activities alongwith overall time period required to complete the entire scope of work.

The bidder shall develop and submit manpower and resource deployment chart.

The bidder shall submit, alongwith the bid, a manual or equivalent document describing/ indicating/ addressing various control/ check points for the purpose of quality assurance and the responsibilities of various functions responsible for quality assurance.

3.2 After the award of contract

The bidder shall submit the schedule for submission of following documents in the kick-off meeting or within two weeks of the placement of order, whichever is earlier.

- Detailed Bar Chart
- Quality plan for all activities, required to be done by the bidder, to accomplish offered scope of work.
- Inspection and test plans, covering various control aspects.
- Job procedures as required by MECON/ Owner.
- Procurement schedule for items to be supplied by contractor covering inspection of the same.

Various documents submitted by the bidder shall be finalised in consultation with MECON. Here it shall be presumed that ones a bidder has made an offer, he has understood the requirements given in this specification and agrees to comply with them in totality unless otherwise categorically so indicated during pre-award stage through agreed deviation/ exception request. All Quality Assurance Plan (QAP) documents shall be reviewed by concerned functional groups of MECON and the bidder shall be required to incorporate all comments within the framework of this specification at this stage of the contract. It is also obligatory on the part of the bidder that obtains approval on every Quality Assurance Plan (QAP) documents, before he starts using a particular document for delivery of contracted scope of work. Participation of MECON/ Owner in review/ approval of quality plan/ QAP documents does not absolve the contractor of his contractual obligations towards specified and intended use of the product (or service) provided/ to be provided by him under the contract.

3.3 **During job execution**

During job execution, the bidder shall fully comply with all quality document submitted and finalised/ agreed against the requirements of this specification. Approval of MECON on all these documents shall be sought before start of work.

Bidder shall produce sufficient quality records on controlled/ agreed forms such that requirements given in this specification are objectively/ demonstrable.

Bidder shall facilitate MECON/ Owner during quality/ technical audits at his works/ sites.

Bidder shall discharge all responsibilities towards enforcement of this specification on all his sub-contractors for any part of the scope which is sub-contracted.

4.0 QUALITY ASSURANCE SYSTEM REQUIREMENTS

4.1 The bidder shall nominate an overall incharge of the contract titled as “Project Manager” for the scope of work of agreed contract. The name of this person shall be duly intimated to MECON including all subsequent changes, if any. MECON shall correspond only with the project manager of the bidder on all matters of the project. The project manager of the bidder shall be responsible for co-ordination and management of activities with bidder’s organisation and all sub-vendors appointed by the bidder.

After award of work, the bidder may review augmentation of manpower and resources deployment chart (submitted earlier), detail it out, if so consented by MECON/ Owner and resubmit the same as “issued for effective implementation of the project”.

4.2 The bidder shall plan the contract scope of work on quality plan format such that no major variation is expected during delivery of contract scope of work. These quality plan shall be made on enclosed format complete in all respect. The quality plan shall be assumed to be detailing bidder’s understanding and planning for the contract/ offered scope of work. The bidder shall plan the type of resources including various work methodology which he agrees to utilize for delivery of contract scope of work.

4.3 The bidder is required to review the contract at all appropriate stages to evaluate his capabilities with respect to timely and quality completion of all activities pertaining to contracted scope of work and shall report for constraints, if any to MECON/ Owner.

4.4 The design activities, if any, performed during delivery of contract scope of work shall be so controlled that the outputs is reliable enough. It is expected that during development of design, the bidder shall take recourse to detailed checking, inter departmental reviews and documented verification methods.

4.5 For all documents which the bidder is likely to utilise for delivery of contract scope of work, a system must exist which assures that latest/ required version(s) of the document(s) is available at all location/ point of use.

4.6 In case the bidder decides to sub-contract any part/ full of the contract scope of work (without prejudice to main Contractual condition), the bidder shall :

- Evaluate the technical and financial capabilities and past performance of the sub-contractor(s) and their products and/ or services before awarding them with the sub-contracted scope of work. Selection of a sub-contractor should meet MECON approval in documented form.

- Requirement of this specification shall be enforced on sub-contracted agency also. The bidder shall choose sub-contractor based on their capability to meet requirements of this specification also.

  Note: It may so happen that, in a given situation, a sub-contractor may not have a system meeting the requirements of this specification. In all such eventualities, bidder may lend his system to sub-contractor for the contract such that sub-contractor effectively meets the requirements of this specification. In all such cases MECON shall be duly informed.

4.7 Bidder shall establish adequate methodology such that the materials supplied by the Owner/ MECON shall be adequately preserved, handled and made use of for the purpose for which they are provided.

4.8 All output delivered against contract scope of work shall be suitably identified in such a manner that either through identification or some other means, sufficient traceability is maintained which permits effective resolution of any problem reported in the outputs.

4.9 Critical activities shall be identified and the bidder is required to have documented methodologies which he is going to utilize for carrying out such activities under the contract scope of work. Wherever it is difficult to fully inspect or verify the output (special process), bidder shall pre-qualify, the performers and methodologies.

4.10 All inspections carried out by the bidder's surveillance/ inspection staff shall be conformity to quality plans and/ or inspection and test plans. All inspection results shall be duly documented on controlled/ agreed forms such that results can be co-related to specific product, that was inspected/ tested.

4.11 All inspection, measuring & test equipments (IMTEs) shall be duly calibrated as per National/ International standards/ codes and only calibrated and certified IMTEs shall be utilized for delivery of contract scope of work.

4.12 All outputs/ products delivered against contract scope of work shall be duly marked such that their inspection status is clearly evident during all stages/ period of the contract.

4.13 All non-conformities (NCs) found by the contractor's inspection/ surveillance staff shall be duly recorded, including their disposal action. The deficiencies observed during stage of the product, shall be recorded and resolved suitably. Effective corrective and preventive action shall be implemented by the bidder for all repetitive NCs, including deficiencies.

4.14 All deficiencies noticed by MECON/ Owner representative(s) shall be recorded on a controlled form (Format No. 00002). Such deficiencies shall be analysed by the bidder and effective and appropriate correction, corrective and preventive actions shall be implemented. Bidder shall intimate MECON/ Owner of all such corrective and preventive action implemented by him.

4.15 Bidder shall establish appropriate methodologies for safe and effective handling, storage, preservation of various materials/ inputs encountered during delivery of contract scope of work.

4.16 Bidder shall prepare sufficient records for various processes carried out by him for delivery of contract scope of work such that requirements of this specification are objectively demonstrable. In case MECON/ Owner finds that enough objective evidence/ recording is not available for any particular process, bidder shall be obliged to make additional records so as to provide sufficient objective evidence. The decision of MECON/ Owner shall be final and binding on such issues.

4.17 The bidder shall arrange internal quality audits at quarterly intervals, to independently assess the conformance by various performers to the requirements of this specification. The findings of such assessment shall be duly recorded and a copy shall be sent to MECON/ Owner for review.

4.18 For all special processes, bidder shall deploy only qualified performers. Wherever MECON/ Owner observes any deficiency, the bidder shall arrange the adequate training to the performer(s) before any further delivery of work.

FORMAT – 00001

Bidder's Quality Plan		Project Name :				PO/ Contract Ref:				
General			Performing Functions			Inspection Functions			Audit Function	
Activity Description	Procedure Number	Code of Conformance	Performer	Checker	Reviewer/ Approver	Sampling Plan	Testing and Inspection Code	Type of (Approval) Surveillance	Audit Scope	Owner's/ MECON Review/ Audit Requirement

Note: 1) The bidder ensures that the filled up format conforms to minimum requirements on Quality Plan/ Quality Assurance, specified by MECON on drawings/ standards/ specifications/ write-up.

2) The bidder confirms that document is issued for information/ approval of Owner/ MECON for the project implementation

OBSERVATION OF QUALITY ASPECTS

FORMAT – 00002

Job No. and Description Issued to : M/s	No. : Date :
Location of Work : Item of Work :	
Details of Observation(Deficiency)	Recommended Course of Action Time Allowed for Correction :
Issued by : _____ Name of Signature of RCM, MECON Site	
Corrective Action taken report by Contractor/ Vendor : Date : Name and Signature	

Distribution (before resolution) :			
Project Manager Owner	Chief Executive MECON Business	MECON Inspection New Delhi	Resident Construction Manager, MECON Site

Verification of Resolution by MECON : Date : Name of Signature			
Distribution (before resolution) :			
Project Manager Owner	Chief Executive MECON Business	MECON Inspection New Delhi	Resident Construction Manager, MECON Site

Rev. : 0
Edition : 1

SPECIFICATION
FOR
DOCUMENTATION FOR PIPELINE CONSTRUCTION

SPECIFICATION NO.: MEC/S/05/21/69

(OIL & GAS SBU)
MECON LIMITED
DELHI 110 092

CONTENTS

SL.NO.	DESCRIPTION
1.0	SCOPE
2.0	RECORDS
3.0	AS-BUILT DRAWINGS AND PIPE BOOK

1.0 SCOPE

1.1 This specification covers the minimum requirements of various records, reports and drawings for all aspects of pipeline construction to be prepared by Contractor and submitted to the Company at intervals as described in this specification and as directed by Company.

1.2 All document required to prepared and submitted by Contractor as per this specification shall be in addition to the various reports, records, methodology statement, calculation, drawings etc. to be submitted by the Contractor for Company's record, review or approval as per the requirements of all other specification included in the Contract between the Company and Contractor.

1.3 This specification shall be read in conjunction with the conditions of all specifications and document included in the Contract between Company and Contractor.

2.0 RECORDS

Contractor shall submit daily, weekly, monthly and after completion to the Company, various records and reports for Company's documentation purpose during and immediately after the construction. This shall as minimum include, but not limited to the following :

2.1 Daily

- Separate progress reports of all crews
- Daily welding results and repairs
- Actual weather conditions
- Application for deviations, if any
- Accidents
- Damages
- Activities required from Company
- Materials Receipts
- Urgently required materials

2.2 Weekly

- Up-to-date list of confirmed site instruction issued by Company
- Materials `taken over'
- Material defects and repairs
- Outstanding activities of Company

- List of installed markers, chainage
- Required approval from Company
- Progress planned
- Reports of manning of all crews, equipment and plant
- Report of equipment and plant
- Report of accidents
- Report of damages
- Report of acquired release, permits
- Priced variations
- Required materials for next month

2.3 **Monthly**

- Progress report for payment, safety report, report of accidents, security report, health and environment report, material balance, approved deviations.

2.4 Further, Contractor shall supply (for approval if required to the Company with document such as but not limited :

- Organogram for construction work.
- Bio-data of key personnel (including foremen).
- (Revised) list of address of personnel in particular of medical staff, safety and security offers.
- (Revised) list of approved coaters.
- (Revised) list of approved sub-contractors.
- Time schedule.
- Acquired permits and/ or approvals from Authorities, if any.
- Minutes of meeting with Company with comments, if any.
- Material certificates, material receipt.
- Guarantee from vendors and sub-contractor.
- Calculations, temporary works, bouyance, blasting.
- Drawings issued by Contractor.
- Vendors drawings.
- As-built of route maps, alignment sheets, details drawings and isometric drawings.
- Procedures such as surveying, stacking, fencing.
- Welding procedure qualification records, radiographic procedure qualification, welder qualification.
- Coating procedure.
- Installation of crossings.
- Hydrostatic testing.
- Blasting.

- Radiographic report alongwith original radiographs
- Pipe and welding book.
- Reports

  - Material tests (coating, welding, painting)
  - Computerised Potential Logging Test
  - Water Samples
  - Cleaning, Pigging Report before Hydrostatic Test
  - Hydrostatic Test
  - Calibration Test
  - Blasting Trials
  - Equipment certificate (dead weight tester, instruments, vessels, equipment)
  - Manuals
  - Major water crossings
  - Waste disposal
  - Disposal of water after hydrostatic test.

2.5 Contractor shall submit to company colour photographs of various construction activities/ operations at regular intervals. Size, number and frequency of the photographs shall be mutually agreed upon at a later stage. Also Contractor shall make video recordings of all operations right from the start of construction till the completion of the work, covering to the extent as instructed by Company and submit to Company. Upon completion of the work, Contractor and submit edited master tape plus six copies of video recording in VHS formats or any format ordered by the Company. The duration of video recording shall be of ½ hour and shall cover all aspects of the job.

3.0 AS-BUILT DRAWINGS AND PIPE BOOK

3.1 General

Contractor shall prepare “as-built” drawings of all by or on behalf of Company issued drawings and of all Contractor work drawings including vendor drawing, such as but not limited to :

For Pipeline Section :

- Route Maps
- Alignment Sheets
- Detail Drawings (road, railway, minor water crossings, major water crossings, valley crossings)

- Isometric drawings of installations
- Special installation

Further Contractor shall prepare a pipe Weld Book.

If required by the Company, Contractor shall update the diskettes for drawings issued for construction of the job.

3.2 **"As-Built" Drawings**

Contractor shall prepare a complete set of "as-built" drawings. From the start of construction, Contractor shall on daily basis process any changes in two sets of drawings. Deleted parts shall be indicated in red, new parts in blue, remarks in green and unchanged parts in yellow. Said drawings shall be kept at site and be available to Company at all times. Contractor shall prepare "as-built" drawings based on these data. On completion of the work, one revised film transparency of all drawing made "as-built" by Contractor containing the "as-built" information shall be handed over to Company as well as one complete set of CD ROM/ floppy diskettes as specified by Company.

Contractor shall prepare and submit a specimen of the layout of the drawings for Company's approval.

The required measurement for "as-built" drawing shall be executed by Contractor by experienced, qualified surveyors.

The surveyors shall daily take care of all measurement required such as but not limited to:

- Horizontal location of pipeline with regard to deviations and Permanent Grid Pillars.
- Vertical Level with regard to Mean Sea Level of pipeline and grade.
- Location and type of bends, fittings etc. and grades, points of intersection.
- Change of wall thickness, materials.
- Location and details of valves, insulating flanges, fencing.
- Location and details of crossing pipes, vents.
- Location and type of coating.
- Location and type of weighting, anchoring.
- Location and type of markers.
- Location of further appurtenance (Pig-Signallers)
- Location of ROU and of pipeline with respect to ROU.
- Type of soil.

- Type of rock
- Type of blasting and ripping.
- Sand padding.
- Type of road pavement.
- Details of bank protection, number of insulators, seals.

Contractor shall also prepare isometric drawings of all installation (facilitates) etc. for which the data as mentioned in or required for the Pipe and Welding Book can be identified and these drawings can also be used for material accounting.

3.3 Nameplates of Equipment

All permanent equipment supplied and installed by Contractor shall be provided with plates by Contractor. All texts shall be submitted to Company for approval before plates may be manufactured.

3.4 Pipe Book

Every page of the pipe and Welding Book shall mention:

- Data relevant to the project and section there of.
- Sequential number.
- Length brought forward (for pipes and other materials).
- Length to bring forward (for pipes and other materials).

Alignment sheet number and atleast the location thereon of two welds on every page of the pipe Book.

Further,

- Diameter of pipeline
- Length of each pipe
- Wall thickness
- Pipe number
- Heat number, certificate number
- Cut and re-numbered pipe ends
- Coating type
- Date of stringing
- Date of welding
- Weld number
- Welder number
- Direction of working

- Type of welding, electrodes, diameter of electrode etc.
- Heat treatment
- Equipment used for radiography
- Limits of water crossings
- Test pressure and date of test.

In order to achieve this, Contractor shall identify all pipe elements. Sample format of Pipe Book shall be submitted for Company approval.

3.5 **As-Built Documents**

Contractor shall prepare all documents in the prescribed format as indicated below. In addition to the hard copies, softcopies of final documents shall also be submitted in electronic media i.e. CD / DVD format.

Software used for the preparation of these documents shall be as follows:

Type	document	Software
a)	Reports/ Documents	MS Office
b)	Drawings	Auto CAD

For the purpose of preparation of as-built drawings, Contractor shall update the "Issued for construction" drawings issued by the Company. It shall be the Contractor's responsibility to covert the drawings furnished by the Company in hard copy into CAD drawings including scanning, digitising and converting the drawings into a suitable format compatible with the AutoCAD and above. As-built drawings shall be prepared only on AutoCAD drawings.

SPECIFICATION FOR CALIPER PIGGING

SPECIFICATION NO. MEC/S/05/62/70

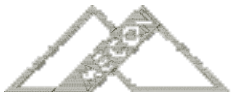

मेकॉन

(PROCESS & PIPELINE DESIGN SECTION)

MECON LIMITED

DELHI - 110 092

C O N T E N T S

Sl. No.	Description	Page No.
1.0	INTENT	1
2.0	OBJECTIVE	1
3.0	SCOPE OF WORK	1
4.0	VELOCITY OF DIFFERENT PIGS	2
5.0	FOAM PIG RUN	2
6.0	GAUGE PIG RUN	3
7.0	CLEANING PIG RUN	3
8.0	CALIPER PIG RUN	4
9.0	PIG TRACKING	5
10.0	MARKER DEVICES	5
11.0	DEFECT VERIFICATION	6
12.0	ABNORMAL SITUATIONS	6
13.0	WORK REPORT	7
14.0	INFORMATION TO BE FURNISHED BY BIDDER	8

SPECIFICATION FOR CALIPER PIGGING

1.0 INTENT

The intent of this specification is to setforth the requirements of the caliper pigging. The specification is not intended to be all-inclusive and the use of this specification will not absolve the contractor of his responsibility of generating valid, interpretable and physically verifiable data.

2.0 OBJECTIVE

The objective of the present pigging programme to access the internal geometry of the following pipelines and detect significant geometry defects if any, which may affect safe operation of the pipeline.

The relevant technical specifications of the pipeline including launcher and receiver details in the Annexure.

SCOPE OF WORK

To achieve the above objective, contractors SCOPE OF WORK includes running of adequate numbers of foam pigs, cleaning pigs (magnet, brush, commination of brush and magnet, scraper, pin wheel etc.), gauge pig and caliper pig.

Further the scope of work comprises supply of skilled personnel, all equipment e.g. foam pigs cleaning pigs, gauging pig, caliper pigs, pig locating and pig tracking devices, spares consumables, communication and transportation including their mobilisation and demobilisation. It is expressly understood that this do not limit the scope of work of the CONTRACTOR in any way. The quantities to be mobilized for different equipment (different types of pigs pig tracking device, marker device) accessories, spare and consumables need to be carefully evaluate by the CONTRACTOR taking in to the consideration that caliper pigging of various

pipelines in the scope of work should be carried out without any constraint and turn around time.

The contractor shall submit the details of each type of pig including foam, gauge cleaning and caliper for approval of MECON/ Client, which he proposes to use. Pigs shall be launched in the pipeline only after their design and size has been approved by MECON/ CLIENT. Due care shall be taken not to damage internal coating by the contractor, while proposing the pigs for internally coated pipeline.

The detailed scope of work shall be, but not limited to under

- Supply of all equipment, personnel and consumables.
- Running of foam, Gauge, Cleaning and Caliper pigs and Tracking to generate valid data.
- Placement of marker devices along the Row over the pipeline.
- Identification of defects in the field as found
- Preparation of work reports.

4.0 VELOCITY OF DIFFERENT PIGS

Contractor shall be required to maintain velocities of propelling medium in such a way that the objective of each pig run shall be achieved.

5.0 FOAM PIG RUN

Contractor to carry out adequate number of foam pigs runs in each pipeline covered under Scope of Work prior to running of cleaning pigs to make a final assessment of the line piggability to the satisfaction of the Contractor and provide detailed daily site report for each run in the approved format before commencing the subsequent run. Contractor to select size of the foam pigs in such a way that the objective shall be achieved.

6.0 **GAUGE PIG RUN**

Contractor to carry out adequate number of gauging pig runs in each pipeline covered under Scope of work including pig tracking for pipeline to assess any internal restriction in the pipeline that may restrict the passage of cleaning and caliper pig. Contractor to provide detailed daily site report for each run in the approved format before commencing the subsequent run Gauge pig shall be equipped with a gauge plate made of Aluminium having its diameters 95% of minimum pipeline Internal Diameter (I.D.). The gauge pig should be able to pass over or negotiate lateral tees or bends on the pipeline.

CLEANING PIG RUN

Pipelines with Internal Coating

Contractor to carry out adequate number of cleaning pig runs by running suitable cleaning pigs in the pipelines including pig tracking till such time contractor is satisified with himself about the degree of cleanliness of pipeline and provide detailed daily site report for each run in the approved format before commencing the subsequent run. Choice of the type of cleaning pig has been left to the contractor. The contractor shall assure that the pigs, which are proposed to be used, are adequately soft and they do not damage internal coating under any circumstances. The brushes and scrappers used shall be of nonmetallic/ plastic material. However, the details of these pigs including their construction details of brushes, scrappers etc. (if applicable) shall be submitted to MECON/ CLIENT for approval before their usage.

Pipelines Without Internal Coating

CONTRACTOR to carry out adequate numbers of cleaning pig runs by running suitable cleaning pigs in pipeline covered under SCOPE OF WORK including pig tracking till such time CONTRACTOR is satisfied with himself

about the degree of cleanliness of pipeline and provide detailed daily site report for each run in the approved format before commencing the subsequent run. Choice of the type of cleaning pig has been left to the contractor. Contractor may deploy brush cleaning pig, magnetic cleaning pig, combination of brush and magnet, scrapper pig etc. the cleaning pigs should be able to pass over negotiate lateral tees or bends on the pipeline

CALIPER PIG RUN

CONTRACTOR to carry out adequate number of electronic geometry (caliper) pig runs each pipeline covered under SCOPE OF WORK including pig tracking for each pipeline decided after findings of gauging pig run to generate valid and interpretable geometry data of the pipeline and analysis of data of the caliper survey to detect the nature, extent and location of geometry defect. Contractor to provide detailed daily site report for each run in the approved format before commencing the subsequent run. The caliper should be capable of inspecting entire length of the pipeline i.e. from launcher to receiver in single run. Battery life should be adequate to commensurate with the run time required to travel the pipeline length. The electronic recorder system should have requisite data storage capacity. The drive cups should have requisite resistance to wear and tear to maintain effective seal throughout the entire run time.

The measurement shall cover the entire 360° of internal pipe wall circumference using properly oriented and suffcient quantity of sensors. For internally coated pipelines adequate care shall be taken by using soft cups so that no damage takes place to the internal coating of pipe. The tool shall be capable to identify and locate the following features as minimum.

- Individual Girth weld
- Dent, ovality, buckles, or any other out of roundness, change in pipeline I.D. and difference of thickness.
- Bend with bend radius and degree of bend.

- Valves or any partially closed valves.
- Tees/ off-takes.

The caliper pig should have minimum capability to identify and detect the defects of following threshold.

Dent	:	3% of outer diameter (O. D.)
Ovality	:	5% of outer Diameter (O. D.)
Location accuracy	:	Axial ± 3.0m
		Circumferential : ± 12°

(For dents, ovalities and pipeline feature as detailed above).

9.0 PIG TRACKING

The movement of any type of pig (Except, foam pig) put into the line during caliper pigging shall be required to be monitored along the pipeline length from launcher to receiver trap. The BIDDER shall detail out the complete methodology of pig tracking proposed to be deployed by him including complete technical details of the equipment and device proposed to be used for this purpose.

It is proposed that pig tracking would be done in a discrete manner at least 5 to and 10 km - interval on each pipeline at preselected locations. The exact KM chainage of these locations shall be decided at site in consultation with the Contractor and CONSULTANT/ COMPANY.

10.0 MARKER DEVICES

The contractor shall submit the details of marker devices, which he proposes to place for relocating the defect accurately in the field, when the same has been identified as a result of Caliper survey.

The contractor shall be responsible for placing these devices (Marker Magnets or Locator coils or any other device) at suitable interval so that the defect can be easily located in the field with minimum above ground measurement. It may be noted that placement of marker devices, their retrieval and locating the identified defect in the field shall be the responsibility of the contractor. The liquidation of defects, if any, is however, not included in the scope of work of the contract.

11.0 DEFECT VERIFICATION

At the discretion of the COMPANY/ CONSULTANT identify at least two verification dig sites for each pipeline jointly with MECON and CLIENT from the recorded data and provide MECON/ CLIENT with their distance from the nearest pipeline feature or reference marker to facilitate location of defect in the field.

The contractor shall depute his representative to observe the verification at verification sites for proving that filed log detected anomalies conform to sizing including linear and circumferential positions.

ABNORMAL SITUATIONS

The objective of this section is to write down foreseeable abnormal circumstances for taking appropriate measures, should such a condition arise during implementation of project.

The following abnormal condition have been foreseen by the Comapny. However, if the BIDDER foresees any other abnormal condition, he is free to make a mention of the same in his technical BID offer:

Tool Failure

CONTRACTOR is required to get valid interpretable and verifiable data for pipeline. In case CONTRACTOR'S equipment fails to perform electronic

geometry inspection to generate valid data for any of the pipeline, CONTRACTOR will make extra runs of pigs to get valid and physically verifiable data.

Stuck-Up Tool

The BIDDER shall details out a contingency plan in his BID as proposed by him in case any of the pigs get stuck up. The plan shall identify procedure for exactly locating the stuck up pig, detail procedure for retrieval of pig, equipment, including support facilities required to retrieve the pig.

If pig do not move from stuck up location, by any measure, then the pipeline section shall have to be cut for retrieval of Pig. Necessary erection, fabrication and modification of pipe with new pipe piece after retrieval of pig shall be done by Contractor. The cost for this works shall be borne by Contractor on actuals. After fabrication & erection, pigging contractor shall run Gauge pig to check internal restriction, if any. Locating the stuck up pig and its retrieval shall be the responsibility of the CONTRACTOR.

WORK REPORT

The work report shall be prepared and submitted in hard copy (4 sets) and Electronics media (2 sets)

The work report shall consist of following as a minimum.

- All field activities.
- Equipment description
- List of installations
- List of significance with feature information and installation reference
- Survey log and enlargement areas of special interest to suitable scale.

INFORMATION TO BE FURNISHED BY BIDDER IN HIS OFFER FOR EVALUATION.

- List of similar projects executed in the past.
- Specification of foam pigs, cleaning pigs, gauge pig and caliper pig for pipelines with and without internal coating respectively.
- Details of caliper pig in following respect.
  Max.% of Nominal pipeline ID tool can pass (% of ID)
  Minimum deformation level reported (as % of ID)
  Accuracy of measurement (% of ID)
  Bend radius tool able to negotiate
- details of pig tracking equipment and pig tracking procedure.
- Pig contingency plan.
- Proposed methodology for execution of pipeline pigging.
- Sample reporting format.
- Minimum velocity of various pigs acceptable to bidder for generation of valid data.

Rev. : 0
Edition : 1

SPECIFICATION
FOR
FIELD JOINT COATINGS OF PIPELINE
FOR HDD CROSSING

SPECIFICATION NO.: MEC/S/05/21/074

(OIL & GAS SBU)
MECON LIMITED
DELHI 110 092

CONTENTS

1.0 SCOPE

2.0 REFERENCE DOCUMENTS

3.0 SPECIFICATION FOR FIELD JOINT COATING MATERIAL

4.0 APPLICATION PROCEDURE

5.0 INSPECTION

6.0 TESTING

7.0 REPAIR OF FIELD JOINT COATING

8.0 REPAIR OF PIPE COATING DEFECTS

9.0 DOCUMENT

1.0 SCOPE

1.1 General

This specification covers the minimum requirement for application of anti-corrosion field joints coating on welded pipe section and field tie-in joints referred to here in after as Joint(s). The contractor shall perform all work in accordance with this specification, latest pipeline coating practices and to the full satisfaction of the Owner. The anti-corrosion pipe joint coating shall be compatible with yard applied, Ultra Violet (UV) radiation protected, 3 layer side extruded polyethylene coating conforming to DIN-30670. The sleeve width shall be suitable for cut back of 120 ± 20 mm to be left at both the ends of coated pipes. The job includes supply of all materials equipment, consumables, labour, supervision, quality control, inspection repairs.

1.2 Manpower, Material & Equipment

1.2.1 The Contractor shall supply wrap around heat shrinkable sleeves which is composed of two parts such as adhesive coated wrap around and a curable modified epoxy primer alongwith applicator pads.

1.2.2 The supply of wrap around heat shrinkable sleeve shall be under Contractor's scope.

1.2.3 The Contractor shall provide all skilled/ unskilled personnel required for execution of this work.

1.2.4 The joint coating operation starting from cleaning and surface preparation till application of joint coating and wrapping of the pipe joints shall be performed under the supervision of skilled personnel who are well versed in the work.

1.2.5 Contractor shall at his own cost provide a fully equipped laboratory and test facilities with adequate inventory to carry out tests required for procedure qualification and during regular production, for testing of joint coating system.

2.0 REFERENCE DOCUMENTS

2.1 Provision of the following documents/ codes shall generally be followed for standard of specification and workmanship.

a) DIN – 30672 : Corrosion protection tapes and Heat Shrinkable Sleeves.

b) SIS – 055900 : Pictorial surface preparation standard for painting steel surfaces.

c) SSPC – SP1 : Steel structure painting council – Solvent Cleaning.

2.2 In case of conflict between the requirements of this specification and that of above referred documents/ codes, the requirements of this specifications shall govern.

3.0 SPECIFICATION FOR FIELD JOINT COATING MATERIAL

3.1 General

This scope covers the minimum requirement of materials, equipment required for installation of field joint coating by wraparound fibre-reinforcement heat-shrinkable sleeve used for corrosion protection and sealing of field joints in pipelines that are forced through the soil by Horizontal Directional Drilling technique. The sleeves shall be suitable for 3LPE/FBE coated pipes operating up to 60°C continuously.

3.1.1 Each Joint Coating System shall consist of :

a) For HDD Joint Coating fiber glass reinforced heat shrinkable sleeve certified to Stress class C60 type CANUSA-TBK or COVALENCE / DIRAX shall be used. Directional drilling kit, multilayer sleeve system or equivalent to be approved by Owner / Engineer.

b) Only coating material C-60 Class as per EN 12068 and DVGW certified (wrapping tape and heat shrinkable material) will be accepted for all material to be coated.

c) A solvent-free, two component liquid epoxy primer

d) A specifically designed wear cone

e) A clamping belt

3.1.2 Sleeve Backing

The heat shrinkable sleeves shall be manufactured from minimum 1.0 mm thick radiation cross linked, thermally stabilized, UV -resistant heat-shrinkable fabric, composed of a fibre glass reinforcement and polyolefin fibres, embedded in a polyolefin matrix.

3.1.3 Sleeve Adhesive

The inner surface of the sleeves shall be coated with a controlled thickness of minimum 1mm of adhesive which in combination with the modified epoxy primer, will bond to and seal to the steel pipe and common yard applied medium temperature yard coatings.

3.1.4 Epoxy Primer

The Epoxy primer shall be a solvent free, modified two components liquid epoxy type primer, which is applied to cleaned and dry steel surface. When the sleeve coatings,

comes in contact with the liquid primer during installation, a strong bond is formed upon full curing of the system.

3.2 **Properties of Field Joint Coating Material**

The pipe sleeves furnished under this specification shall be tested and shall meet the requirements specified in the table below:-

3.2.1 **Heat-Shrinkable Sleeve Material**

Property	Test Method	**Condition**	Requirement
Cold Crack	ISO 4675		Below 40°C
Chemical resistance	ISO 175	168 hrs. immersion on either 0.1 N NaCl @ 23°C, 0.1N H_2 SO_4 @ 23°C, 0.1 N NaOH @ 23°C, Fuel oil @ 23°C. Petroleum jelly @ 70°C	
Followed by test for bursting strength	ISO 3303	23°C	1100 N Min.
Thermal ageing Followed by test for bursting strength	ISO 188 ISO 3303	150°C 168 hrs. 23°C	1700 N Min.

3.2.2 **Adhesive material**

Property	**Test Method**	**Condition**	**Requirement**
Softening point	ASTM E28		85°C minimum
Peel Strength	DIN 30672	23°C. CHS* 100 mm/ min. 60°C	200 N/cm minimum 60 N/ cm
Peel Strength After immersion for 4 weeks at 23°C~NaOH pH12 H_2SO_4 pH2 ground water solution:- 1.2% H_3PO_4 1.6% KOH	DIN 30672	23°C. CHS* 100 mm/ min.	200 N/cm minimum

Property	Test Method	Condition	Requirement
1.2NaCl 1.0% Fe_2O_3			
Peel Strength after conditioning for 30 cycles from -30°C to 60°C	DIN 30672	23°C. CHS* 100 mm/ min.	60 N/cm minimum
Shear strength	ISO 4587	23°C. CHS* 50 mm/ min.	200 N/cm^2 minimum
Corrosive effect	ASTM D 2671	120°C. 16 hrs.	No corrosion

3.2.3 **Primer Material**

Property	Test Method	Condition	Requirement
Density	ASTM D1084	23 +/- 0.5^0 C Part A: 2 rpm, spindle #6 Part B: 20rpm, spindle #3	Part A: 60+/- 30 Pas Part B: 1.55+/-0.55 Pas
Mixing ratio	By weight By volume	23°C	100:40 100:60
Shear strength	ISO 4587	23°C. CHS* 50 mm/ min.	1000 N/cm^2 minimum

*** CHS = Cross Head Speed**

3.2.4 **Functional Properties**

Sl. No.	Property	Test Method	Condition	Requirement
a)	Impact resistance	DIN 30672	23°C. Class C	No holidays when tested at 20 KV
b)	Penetration resistance	DIN 30672	60°C. Class C	Minimum 70% of original resistance thickness left; no holidays when tested at 20 KV
c)	Specific coating resistance	DIN 30672	23°C.	10^8 Ohm sq. m minimum; no oxidation on pipe surface

Sl. No.	Property	Test Method	Condition	Requirement
d)	Cathodic disbondment resistance	ASTM G42	60°C. 30 days	15 mm increase in radius of disbondment max.
e)	Resistance to split propagation	TEST METHOD-1*		No cut propagation
f)	Resistance to circumferential edge loading	TEST METHOD-2*		50 KN minimum
g)	Resistance to local edge loading (chisel test)	TEST METHOD-3*		6 KN minimum

***Test Methods**

3.3 **Test Methods**

3.3.1 **Resistance to split propagation (Test Method -1)**

A rectangular piece of 50mm width by 150 mm length shall be cut from the material as delivered. A 5mm long, clean cut shall be made mid-way in the piece along once of the long edges perpendicular to this edge. The sample shall be mounted on a clamp that holds it securely and avoids any shrinking during testing.

The assembly shall be placed in an air-circulating oven present at 170^0C.

After 15 minutes, the sample shall be removed from the oven, allowed to cool down to room temperature and examined for cut propagation.

This test simulates the unlikely event when the sleeve gets cut during the installation phase. Sleeves based upon extruded polyelfin show a distinct tendency to propagate the cut along the total width of the sleeve. Sleeves suitable for HDD works shall not exhibit this behaviour.

3.3.2 **Resistance to circumferential edge loading (Test method -2)**

The sleeve shall be installed on a DN 200 three -layer PE coated steel pipe piece. A thick wall steel ring that fits a DN 200 three-layer PE coated steel pipe with a tolerance of 0.2+-0.2 mm shall be positioned against the front edge of the wear cone sleeve and then pushed towards the sleeve system at a constant speed of 5 mm/ min over a distance of 50 mm. The forces necessary shall continuously be registered. The minimum required force shall be less than 50 KN.

During the pushing or pulling operation, any obstacle protruding from the smooth pipe surface is loaded by the surrounding soil that passes by. This test simulates the shear forces that are exerted on to the sleeve by rigid soil type.

3.3.3 **Resistance to local edge loading (Chisel test: Test Method -3)**

The sleeve shall be installed on a DN 200 three-layer-PE coated steel pipe piece.

A chisel as depicted in Figure -1 shall be positioned against the front edge of the wear cone sleeve and, pushed parallel to the pipe surface towards the sleeve system at a constant speed of 5mm/ min over a distance of 50 mm. The forces necessary shall continuously be registered. The minimum required force should not be less than 6 KN.

During the pushing or pulling operation, the pipe may traverse soil area containing solid particles, such as stones, pebbles or crushed rock. These particles tend to rip away the pipe coating locally. Any obstacle protruding from the smooth pipe surface is lifted, leading to soil undercutting. This test determines the resistance of sleeve against this type of abuse.

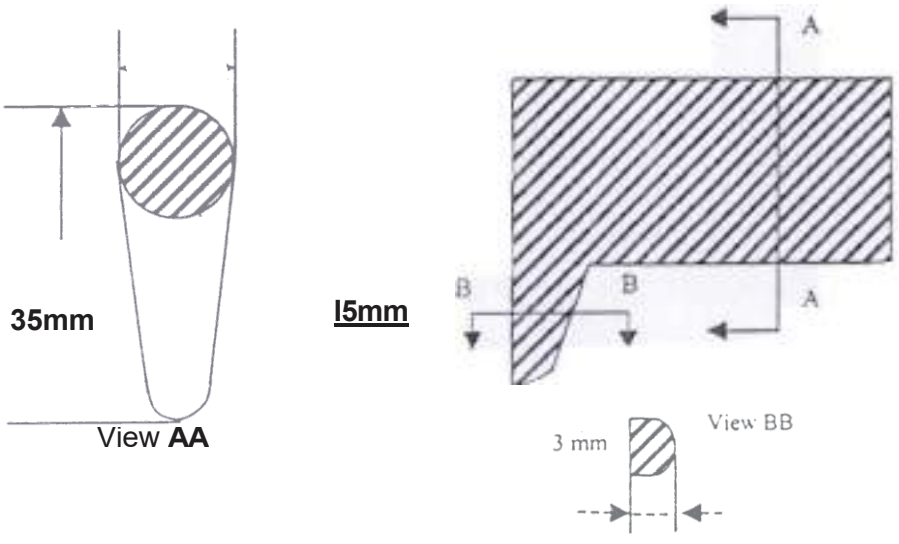

Figure- 1 Chisel

3.4 **Qualification for Contractor's supplied Materials and their Manufacturer**

3.4.1 Prior to procurement of coating materials, Contractor shall furnish the following information for qualification of the Manufacturer and material:

a. Complete descriptive technical catalogs describing the materials offered along with samples of corrosion coating materials, its properties and application instruction as applicable specifically to the project.

b. Reference list of previous supplies, in last 5 years, of the similar material or manufacturer shall be notified to Company, whose approval in writing of all charges shall be obtained before the materials are manufactured.

3.4.2 Contractor shall ensure that the coating materials supplied by him are properly packed and clearly marked with the following :-

- Manufacturer's name
- Material Qualification Certificate Number
- Batch Number
- Date of Manufacturing and date of expiry

3.4.3 Prior to shipment of materials from the Manufacturer's Works. Contractor shall furnish the following documents:

a. Test certificate/results as per Manufacturer's Quality Control Procedure for each batch of materials complying with the requirements of relevant sub-clauses of clause no. 3.2 of the this specification.
b. Specific application instructions with pictorial illustrations.
c. Specific storage and handling instructions.

3.4.4 All documents shall be in English language only.

3.5 **Storage of Materials**

Material shall be stored in sheltered storage by the Contractor in the manufacturer's original packing and away from direct sunlight and in accordance with manufacturer's instructions.

4.0 **APPLICATION PROCEDURE**

4.1 **General**

a) The application procedure shall be in accordance with manufacturer's instruction and the minimum requirements required below whichever are the most stringent and shall be demonstrated to and approved by the Owner.

b) Contractor shall provide and maintain mobile facilities which contains all necessary tools, propane torches, epoxy primer pumps, silicon rollers, testing instruments, equipment, and spares for cleaning, coating, repairs, inspection and testing.

c) Contractor shall furnish sufficient number of the following equipment and the required spares as a minimum for inspection and testing purpose for each crew :

- Fully automatic full circle adjustable holiday detector with audio and visual output signal for inspection of coating.
- Portable Tensile Strength Tester
- Digital Thermometer
- Solid state digital thickness gauge for measuring thickness of joint coating.

4.2 **Pipe Surface Preparation**

a) The Contractor shall thoroughly clean and dry the joint surface by power tool cleaning in accordance with SSPC-SP1. The complete procedure and details of equipment used shall be prepared by the Contractor for Owner's approval prior to commencement of joint coating work.

b) Prior to cleaning operation, Contractor shall visually examine the joint surface area and shall ensure that all defects, flats and other damages have been repaired or removed.

c) Where oil, grease or other materials detrimental to the finished coating is present, it shall be removed with a continuous removal solvents cleaning system to remove completely all such materials in accordance with SSPC-SP1.

d) The standard of finish for cleaned pipe surface shall conform to SA 2½ of Swedish Standard SIS-055900 latest edition. The degree of preparation required to obtain an end product that fulfil the requirements of this specification may not be sufficiently covered and is not limited by SIS-055900. Surface of pipe after shot blasting shall be have an anchor pattern of 50 to 70 microns. This shall be measured by a suitable instrument such as Elecometer.

e) Piper temperature immediately prior to blasting shall be minimum 20°C. At no time shall be blast cleaning be performed when the relative humidity exceeds 85%. Surface temperature must be at least 3°C above the dew point temperature.

f) The abrasive blast material shall be free of impurities and inclusions, water and oil. All abrasives shall be removed after blast by brush or vacuum type

cleaner prior to applying joint coating. The abrasive shall be stored in a dry condition and maintained dry during use.

g) The compressed air for blasting shall be free of water and oil. Contractor to verify air cleanliness at the start of the work and every four hours thereafter. Separators and the traps shall be provided at the compressor and blasting station. Separators and traps shall be checked daily for effective moisture and oil removal during coating operations.

h) The ends of existing line pipe protective coating shall be inspected and chamfered. Unbonded portions of the coating shall be removed and then suitably trimmed. Portions where parent coating is removed shall be thoroughly cleaned as specified.

i) Pipe shall be visually inspected by Contractor immediately after blast cleaning for surface defects such as slivers, laminations, leafing, scores, indentation slugs or any other defects considered injurious to the coating integrity. Such defects shall be reported to Owner and on permission from Owner, such defects shall be removed by filling or grinding in such a way as not to "blue" the steel.

4.3 **Procedure**

a) The application procedure shall be in accordance with manufacturers instruction and the minimum requirements specified below whichever are the most stringent and shall be demonstrated to and approved by the owner.

b) Applicators for coating application shall be given necessary instructions and training before start of work by the CONTRACTOR. To verify and qualify the application procedures, all coating applied during the qualification test, shall be removed for destructive testing until the requirements stated in sections 'Inspection' and 'testing' of this specification are met.

c) Prior to surface cleaning, the surface shall be completely dry. An effective heating equipment which shall not give rise to deposits shall be used. Care shall be taken to avoid damage to existing coating.

d) All pipe joint surfaces shall be thoroughly examined before the application of the coating in order to ensure that the surfaces are free of oil, grease, rust, mud, earth or any other foreign matter.

e) Liquid epoxy primer shall be applied on the joints immediately after the completion of heating operation.

f) The heat shrink sleeve is then wraparound the joint while the primer is still wet and shall overlap the existing pipe coating by minimum 100 mm on each side.

g) The wraparound sleeve is shrunk on pipe joint with a propane torch moved back and forth over the surface when heated above 125°C, the sleeve shall shrink tightly around the substrate on to the wet-primer. At the time of application of the primer, th pipe surface temperature shall be at least 60°C at every point. To check this, approved temperature indicators shall be used . temperature indicating crayons shall not be used.

h) The wraparound sleeve shall be entirely wrapped around the pipe positioning the closure patch off to one side of the pipe in 10m or 2 O'clock position, with edge of the undergoing layer facing upward and an overlap of min. 100 mm.

i) Heat shrinking shall be procedure shall be applied to shrink the sleeve in such a manner that all entrapped air is removed using gloved hands and hand rollers. The complete shrinking of entire sleeves shall be obtained without undue heating of existing pipe coating and providing due bonding between pipe, sleeve and pipe coating. A thermochrome paint shall be applied a an closure patch to indicate that sufficient heat/ temperature has been obtained. The joint coating shall have wear cone applied over the leading edge of the sleeve and the clamping belt tightened over it.

j) Application of Wear Cone - The leading edge will be given an extra wear cone. Start by heating the leading edge area of the main sleeve to 70^0C. Wrap the leading edge sleeve over the transition Mill coating. Ensure that the closure is placed away from the main sleeve closure Shrink the leading edge sleeve.

k) Application of Metal Belt - The metal belt shall be applied over the wear cone sleeve. The metal belt will be tightened using the strapper tool supplied by the manufacturer.

l) Sufficient manpower working on opposite sides of each pipe joint are required for installation of the sleeve.

m) The installed sleeve shall not be disturbed until the adhesive has solidified.

5.0 INSPECTION

5.1 For wraparound coating, a visual inspection shall be carried out for the following :

- Mastic extrusion on either ends of the sleeves shall be examined
- There shall be no sign of punctures or pinholes or bond failure. The external appearance of the sleeves shall be smooth, free of dimples, air entrapment or void formation.
- Weld bead profile shall be visible over the sleeves.
- The entire closure patch shall have changed colour uniformly.

5.2 **Holiday Inspection**

5.2.1 The Holiday Detector used shall be checked and calibrated daily with an accurate D.C. voltmeter. The detector electrode shall be in direct contact with the surface of coating to be inspected.

5.2.2 The entire surface of the joint section shall be inspected by means of a full circle Holiday Detector approved by OWNER set to DC Voltage of at least 25 kV for wraparound sleeves. Inspection of the heat shrink sleeve coating shall be conducted only after the joint has cooled below + 50°C.

5.2.3 All the coated joints shall be subjected to Holiday Detection test.

5.2.4 An installed sleeve with more than two holiday shall be stripped and a new one be installed.

6.0 **TESTING**

a) OWNER reserves the right to test one out of every 30 joint coating subject to a minimum of 2 joints. CONTRACTOR shall provide all assistance in removing and testing of field joint coatings. From each test sleeve, one or more strips of size 25 mm x 200 mm shall be cut one perpendicular to the pipe axis and slowly peeled off. This test shall be conducted between either sleeve and metal or sleeve and mill coating as per direction of Owner/ Engineer-in-charge.

b) The required peel strength shall be 60 N/cm (min.) at 23°C. The system shall fail only in the adhesive layer. No failure either in adhesion to steel or adhesion to backing shall be permitted. The adhesive layer that remains on the pipe surface shall be free of voids resulting from air or gas inclusion.

c) If the sleeve taken away for test does not meet the requirement of clause 6.0 (b), the adjacent two sleeves do not meet the requirements of clause 6.0 (b) the field joint coating shall be stopped until OWNER is satisfied with application methods.

d) For the test tensile strength, two parallel incisions spaced 1 CM. Apart are made right down to the surface of the steel. A further incision shall then be at right angles to the first angles to the first two incisions. With the aid of a 1 cm. Wide knife the coating is lifted over a length of about 2 cm. And clamped into the tensile tester, where upon a uniform pull is exerted at an angle of 90 degree. The tensile strength shall be more than a 2500psi.

e) Coating thickness shall be checked by non destructive method for each field joint.

7.0 **REPAIR OF FIELD JOINT COATING**

7.1 **If a field joint is detected to be unacceptable after inspection and testing as per clause no. 6.0 of this specification. The CONTRACTOR shall , at his own cost :**

- determine the cause of the faulty results of the coatings.
- mobilise the services of expert of manufactures, if required.
- test to the complete satisfaction of the OWNER, already completed field joint coatings.
- stop joint coating until remedial measures are taken against the causes of such failures, to the complete satisfaction of the OWNER.

7.2 CONTRACTOR shall replace all the joints coating found or expected to be unacceptable as per clause no. 6.0 of this specification.

7.3 CONTRACTOR shall, at his own cost repair all areas where the coating has been removed for testing by the OWNER or by the CONTRACTOR to the complete satisfaction of the OWNER.

7.4 The upright edges of the damaged areas shall be chamfered, in addition to the steel shall be free from rust, dirt, oil and grease. The coating around the damaged area shall be roughened. After thorough mixing (in accordance with the recommendations of the manufacturer) the filler shall be applied, to sufficient Thickness with the aid of stooping knife, whilst observing ample overlap hardening. The material will require the approval of OWNER.

7.5 After the coating work on welded joints and repairs to the coating have been completed, The coating area as a whole shall be tested with spark-tester before pull back/ lowering/jacking the pipeline.

7.6 Company shall be entitled to check the coating on buried pipelines or parts of pipelines with equipment such as the “Pearson meter” and the resistance meter. If the coating defects are established, the Contractor shall be responsible for excavation at such points, repairing the coating, spark testing and backfilling the excavations without extra charge.

8.0 **REPAIR OF PIPE COATING DEFECTS**

8.1 Any defect or damage in pipe coating observed till incorporation on permanent works shall be rectified by the Contractor at his risk and cost. However, for repair of damaged coating observed during taking over of Owner supplied pipe, if any, shall be paid extra in accordance with the relevant items of Schedule of Rates.

8.2 Field repair of coated pipes shall be carried out by using same type of wraparound sleeves used for joint coating.

8.3 The repair procedure shall be same as specified herein above for application of anti-corrosion field joint coating on welded pipe.

9.0 DOCUMENTATION

9.1 Prior to start the coating works at site Contractor shall furnish following Owner/ Consultant's approved documents in addition to that mentioned in clause no. 3.4 of this specification.

- Procedure for field joint coating & their repair
- Procedure for repair of pipe line coating defects
- Procedure qualification record
- Inspection test plan
- Inspection format

9.2 Final submission of all documents after finish the work shall be as per relevant specification & SCC enclosed with the tender or as per direction of Engineer-in-charge.

Rev. : 0
Edition : 1

SPECIFICATION
FOR
PIPELINE CROSSINGS USING HORIZONTAL DIRECTIONAL DRILLING METHOD

SPECIFICATION NO.: MEC/S/05/21/75

(OIL & GAS SBU)
MECON LIMITED
DELHI 110 092

CONTENTS

SL.NO.	DESCRIPTION
1.0	SCOPE
2.0	REFERENCE DOCUMENTS
3.0	DESIGN AND ENGINEERING
4.0	CONSTRUCTION
5.0	DOCUMENTATION

1.0 SCOPE

1.1 This specification covers the minimum requirements for various activities to be carried out by the Contractor for the engineering and construction of pipeline crossing using directional drilling method.

1.2 This specification shall be read in conjunction with the requirements of specification and other documents included in the CONTRACT between owner and Contractor.

1.3 Contractor shall, execute the work in compliance with laws, by laws, ordinance and regulations. Contractor shall provide all services, labour, inclusive of supervision thereof, supply of all materials (excluding "Owner supplied Material), equipment , appliances etc..

1.4 Contractor shall take full responsibility for the stability and safety of all operation and methods involved in the work.

1.5 Contractor shall be deemed to have inspected and examined the work area and its surroundings and to have satisfied himself as far as practicable with the surface conditions, hydrological and climatic conditions, the extent and nature of the work and materials necessary for the completion of the work, and the means of access to the work area.

1.6 Contractor shall be deemed to have obtained all necessary information with regard to risks, contingencies and all other circumstances, which may influence the work.

1.7 Contractor shall, in connection with the work, provide and maintain at his own costs all lights, guards, fencing, as necessary or directed by Owner or their representative.

1.8 For the purpose of this specification, the following definitions shall hold.

- The words `Shall' and `Must' are mandatory.
- The words `Should, May and Will' are non mandatory, advisory, or recommendatory.

1.9 Contractor shall provide free of charge reasonable facilities to Owner's personnel to witness all stages of construction.

2.0 REFERENCE DOCUMENTS

Reference has been made in this specification to the latest edition (edition enforce at the time of issue of enquiry) of the following codes, standards and specifications :

a. ASME B 31.4 : Pipeline Transportation Systems for Liquid Hydrocarbons and Other Liquids.

b. ASME B 31.8 : Gas Transmission and Distribution Piping Systems.

c. OISD 226 : Natural Gas Transmission Pipeline and City Gas Distribution Network.

d. MECON's Standards : Navigable Waterway Pipeline Crossing Warning Sign MEC/S/05/21/10

e. MECON's Standards : Standard Specification for Pipeline Construction MEC/S/05/21/01

In case of conflict between the requirements of this specification and the above referred documents, the requirements of this specification shall govern.

3.0 DESIGN AND ENGINEERING

3.1 The limits of each crossing shall be determined by the Contractor on the basis of crossing profile based on survey drawings, design, equipment, installation technique and site condition. Contractor shall furnish all engineering design calculation and crossing drawings etc. to owner for their approval prior to execution of the work.

3.2 Within the entire limits of crossing, the minimum cover to top of coated pipe shall be as specified in the Special Conditions of Contract (SCC).

However, wherever the drilled length for a crossing includes the crossings of obstacles such as roads, railroads, cannals, streams, etc. The following minimum requirements of cover to the pipe shall be satisfied unless specified otherwise in the scope of work in SCC.

For Road Crossing : 1.4 m from top of road to top of pipe.

For railroad crossing : 1.7 m from base of Rail to top of pipe.

For canal crossing : 1.5 m from lowest bed level to top of pipe.

In case the pipeline crosses other utilities, viz., other pipelines, sewers, drain pipes, water mains, telephone conduits and other underground structures, the pipeline shall be installed with at least 500 mm free clearance from the obstacle or as specified in the drawing or such greater minimum distance as may be required by authorities having jurisdiction. Also in all cases, the minimum covers specified above shall be maintained within the entire limits of crossing.

3.3 The entry and exit points of the pipeline at ground level shall not come within the limits of crossing as defined in the crossing drawings.

3.4 Contractor shall carry out calculations for determining the maximum permissible overburden on pipe, to check that the empty pipeline is safe from collapse at any point along the drilled crossing section. Contractor shall submit these calculations to Owner for approval.

3.5 **Pipeline Axis**

The plane containing the pipeline route axis shall be perpendicular to the horizontal plane. There shall be no bending of the pipeline route axis at depths shall lower than 2 meters below ground level.

3.6 **Back-reamed hole and Pipeline Interface**

3.6.1 Contractor shall derive combination of:

- Back-reamed hole diameter
- Bentonite density
- Pipeline submerged weight in bentonite (and means to achieve that weight)

to optimise the crossing design in terms of pipeline stresses and power requirement

3.6.2 Contractor shall indicated what maximum shear stress in the pipeline coating will result from his choice of above parameters and other characteristics described in this section.

3.6.3 Contractor shall furnish all calculations for Owner's approval. If shear stress in pipe coating is, in the opinion of Owner, beyond the permissible limits, Contractor shall revise his choice of parameters to reduce shear stress on pipe coating to permissible value.

3.7 Contractor shall determine in the minimum allowable elastic bend radius for pipe from the following consideration:

3.7.1 Maximum Longitudinal Stress During Installation

Total maximum longitudinal stress in the pipeline due to tension and bending at any location shall not exceed 90% of the SMYS of the pipe material.

Contractor shall, in order to check this requirement, evaluate the maximum tensile forces to which the pipeline is subjected to at any phase of its installation during the pulling operation.

3.7.2. Maximum Equivalent Stress During Final Hydrostatic Test

After installation, the pipeline shall be hydrostatically tested to a minimum test pressure equal to 1.4 times the design pressure or at a pressure stipulated in the Special Conditions of Contract whichever is higher. However, during hydrostatic testing, the combined equivalent stress in the pipeline due to bending and test pressure shall not exceed 90% of the SMYS of pipe material.

3.7.3 Maximum Equivalent Stress During Service

Permissible values of maximum equivalent stress during services shall be governed by the requirements of ANSI B 31.8/B 31.4 as applicable. The details of pipeline operating parameters are provided in the Special Conditions of Contract.

3.7.4 The minimum allowable radius of curvature for the pipeline shall be the highest value of the minimum pipeline elastic radius as computed from the considerations outlined in clause 2.7.1 to 2.7.3 above after correction for drilling inaccuracies or multiplication by the factor 1.85. whichever results in the highest permissible value of minimum elastic bend radius.

3.7.5 Contractor shall submit all calculations for Company's approval alongwith procedure.

3.8 **Pipeline Configuration along the Support String Before Entry Point**

3.8.1 Contractor shall determine the required pipeline configuration in order to allow smooth pull in the crossing entry point and admissible stress in the supported pipeline string. Pipeline combined stress shall not exceed 95% of the specified minimum yield strength for line pipe material.

3.8.2 Contractor shall furnish all calculation and specify the number of required supports, description of the supports, their co-ordinates and capacity in metric tons.

3.8.3 Contractor shall also furnish a drawing of the launching ramp indicating the pipeline configuration.

3.8.4 The distance between each roller shall also be specified and justified.

3.9 Contractor shall, based on result of design and engineering carried out by him, prepare construction drawings for the crossing and shall submit the same for Owner's approval. Construction drawings shall indicate the pipeline profile with levels furnished at sufficient intervals for proper control during construction. Other relevant details viz., entry and exit angles, radius of bends, etc. shall also be indicated. Contractor shall also calculated the total length of pipeline required as well as the maximum tension required on the pull head of the rig.

3.10 All construction works shall be carried out in accordance with the construction drawings approved by Owner.

3.11 Before commencement of any field work, Contractor shall furnish for Owner's approval all design calculations and construction drawings as stipulated in the above clauses.

4.0 **CONSTRUCTION**

Contractor shall comply with all the conditions and requirements issued by Authorities having jurisdiction in the area where the work is to be performed.

If no public road exists, Contractor shall arrange on his own for access to his work area at no extra cost to owner.

4.1.0 **Installation Procedure**

4.1.1 Contractor shall, before commencing any work at site, submit for Owner's approval a detailed installation procedure.

4.1.2 The installation procedure as a minimum shall include the following:

a) **Project Organisation Chart:**

This shall indicate Contractor's organisational set-up at site and manpower deployment.

b) Details of fabrication yard and launching areas.

c) **Details of Equipment :**

Contractor shall furnish the complete list of all equipment to be deployed for preparation of pipe string and installation of crossing. Technical characteristics and capacity of each equipment including instrumentation, monitoring and control equipment shall be furnished in details.

d) Pipeline string preparation details (hauling, stringing, welding etc.)

e) Hydrostatic test procedure (pre and post installation)

f) Disposal methodology of bentonite slurry.

g) Method of installation covering all steps of construction, viz. Rig up, Pilot hole, Back-Reaming, Pulling Down, Backfilling etc.

h) Calculation for maximum pulling force on the rig and recommended maximum pulling velocity.

i) Time schedule for construction.

4.1.3 The time schedule shall be in accordance with overall time schedule for the project.

4.1.4 Approval by Owner of the methods used by Contractor shall in no way relieve Contractor from the sole responsibility for safe and satisfactory installation, working and operational use of the pipeline crossing.

4.2 **Pipe String Preparation**

Complete pipe string shall be prepared as a single string for pulling. Welding,

radiographic inspection of joints and joint coating of the string shall be performed in accordance with the respective applicable specifications included in the Contract document.

4.3 **Pre-testing**

4.3.1 Contractor shall hydrostatically pre-test the complete pipe string of each crossing before installation as per approved procedure for a minimum period of 24 hours.

4.3.2 After pre-testing, joint coating of the welds shall be done as per specification for specific field joint coating of pipeline for HDD crossing included in the contract document

4.3.3 The section of the pipeline corresponding to the crossing shall, before installation, be subjected to hydrostatic test pressure as stipulated in the Special Conditions of Contract. During the test, Contractor shall check all welds for leakage. Failure, if any, during the test shall be rectified by the Contractor.

4.4 **Gauging**

4.4.1 Before pre and post installation hydrostatic testing, Contractor shall prove the diameter of the pipeline by passing a gauging pig through the pipeline. The gauging pig shall have a diameter equal to 95% of the nominal internal diameter of the pipe. Contractor shall supply and install all temporary scraper launchers/ receivers and other equipment, piping and materials and consumables required for the purpose.

4.5 **Installation**

4.7.1 Installation shall be done in accordance with approval installation procedure.

4.7.2 The lateral offset of the actual exit point of the pilot hole from the calculated and theoretical exit point shall not exceed half per cent (0.5%) of the length of the crossing.

4.7.3 The length tolerance shall not exceed one per cent of the crossing length, subject to the condition that the actual exit point shall not be within the limits of crossing as defined in the approved drawings.

4.7.4 Back reaming shall be done separately from the pipeline pulling operation. The size of the back-reamed hole shall be adequate (approximately 1.5 times the pipeline diameter) to allow enough clearance for a smooth pull-back of the pipeline.

4.7.5 Contractor shall be responsible for maintaining the drilled hole till such time the pipeline is pulled in.

4.7.6 During pulling operation, the buoyancy of the pipeline shall be controlled by suitable approved methods so as to maintain the buoyancy as close as possible to zero during pull-back in order to reduce friction forces of the pipeline in the hole.

4.7.7 Bentonite slurry of specified viscosity shall be pumped into the hole, preventing the wall from collapsing and protecting the pipeline coating.

4.6 **Contractor shall be responsible for the integrity of the corrosion coating.**

4.6.1 Before pull-back operation, megger test shall be done for the entire pipeline (externally corrosion coated) string made for crossing by HDD method.

4.6.2 After pull-back operation to ensure the integrity of pipeline coating, again megger test shall be done for the bored string before tied-in to the mainline pipe. The megger value before & after pulling operation of the pipeline string shall be nearly same and acceptable to Owner.

4.6.3 However, if, in Owner's opinion, the integrity of external corrosion coating of bored pipeline string is not established by above (Clause No. 3.6.1 & 3.6.2), then further in order to ensure the integrity of coating of the bored pipeline string, megger test of the coating shall be carried out in accordance with the following steps:

a) The test must be carried out before the bored pipe is tied-in to the mainline pipe

b) Measure the natural potential of the bored pipe at both ends.

c) Set up the temporary impressed current system with a digital multimeter connected to measure the output current. Position the test electrode anode as far from the bored pipe as interconnecting cable will allow and no closer than 10 meters.

d) Place the reference electrode at the remote end (opposite to impressed current system) to monitor the bored pipe potential

e) Impress a current into the bored pipe start at Zero amp. and increase slowly until the bored pipe potential is depressed to 1.5 V with respect to the reference electrode.

f) Note the current from the digital multimeter and calculate the current density.

g) The desirable value of calculated current density should be less than 70 micro ampere per square meter of drilled pipe surface in contact with the soil.

4.6.4 If Contractor again fails to establish the integrity of coating of the bored pipeline string and the same is not acceptable to Owner, the above works shall not be continued further until the cause analysed and rectified by the Contractor to the entire satisfaction of Owner.

4.7 **Final Hydrostatic Test**

4.7.1 The complete crossing section shall be tested after installation. The test pressure shall be as stipulated in the Special Conditions of Contract. After temperature stabilisation, pressure shall be retained in the pipeline for a period of 6 hours and recorded by manothermograph. The hydrostatic testing shall be carried out in accordance with approved procedures and specification detailed elsewhere in the document.

4.7.2 **Test Procedure**

Contractor shall prepare for Company's approval a hydrostatic test procedure manual for pre-testing and post-installation testing of pipeline. The test procedure manual shall include, but shall not be limited to, the following items:

a. For the pipe section to be tested, a diagram indicating all fittings, vents, valves, temporary connections, relevant elevations and ratings. The diagram shall also indicate injection locations and intake and discharge lines.

b. Estimated amount of test water, water source, including required concentration of corrosion inhibitors and additives, procedure for inhibitor injection and control of concentration.

c. Filling and flushing procedures, including a complete description of all proposed equipment and instruments (including spares), their location and set-up.

d. The type and sequence of pigs and the pig tracking system for cleaning and removal of air pockets, pig inspection procedures, including procedure to be followed in case the gauging pig indicates damage.

e. Procedures for levelling and stabilization after filling and for pressurization and to allow for temperature stabilization.

f. Pressure testing procedure including a complete description of all proposed equipment and instruments (including spares), their location and set-up, and proposed system for observation and recording of data during the pressure test.

g. All calculations including air-volume calculations and pressure change due to temperature change calculations.

h. Procedure for detection and location of leaks.

i. Procedure for safe dewatering the pipeline section after testing, including a complete description of all proposed equipment and instruments (including spares), their location and set-up, the type and sequence of pigs and the pig tracking system along with the pig specifications.

j. Forms for recording the testing data.

4.7.3 Contractor shall furnish all necessary equipment & instrumentation for performing the work including all temporary piping, hydro test header and scraper launcher / receiver etc.

4.7.4 The test medium shall be fresh water to be arranged by the Contractor. The water to be used shall be filtered, shall not be contaminated, and free from sand of silt. Contractor shall submit laboratory test reports of water used for testing. Contractor shall provide Company approved corrosion inhibitors, oxygen scavengers and bactericides to be added to the test water. Contractor shall furnish and install all temporary piping, which may be necessary to connect from source of water to its pumps and manifolds / tankage.

4.7.5 Before filling operation, Contractor shall clean the pipeline by air driven pigs provided with spring loaded brushes and cups to remove all mill scale, rust / sand from the internal of pipe sections.

4.7.6 The hydrostatic test shall be considered as positive if pressure has kept a constant value throughout the test duration, except for changes due to temperature effects, and there is no abrupt pressure drop throughout the test duration.

If test section fails to maintain the specified test pressure after isolation, Contractor shall determine by search the location of leakage or failure. All leaks and failures within the pipe wall or longitudinal seam shall be repaired by replacement of entire joint or joints in which leakage or failure occurs. In those cases where leaks occur in circumferential welds the method of repair shall be determined by Company. Contractor shall comply with instructions of the Company whether to replace a section of the line pipe that includes the line leak or whether to repair the circumferential weld. This repair should, however, meet the requirements of welding specification contained herein. Where failures occur in pipeline field bends, bends shall be replaced with same degree of bends. After completion of repairs, the hydrostatic test shall be repeated in full, as per the approved procedures.

All work of reinstating line pipe, to replace failures, shall be done in accordance with the specifications contained herein.

Contractor shall haul and stockpile all damaged and defective pipes to storage locations designated by the Company. All cracks and splits resulting nom failures shall be coated with an application of grease to preserve the characteristics of failures nom corrosion. Joints of failed pipes shall be marked with paint, with a tag indicating failure details, date and location of failure and pressure at which failure occurred.

4.7.7 After completion of successful hydrotest of the above portion, the pipeline shall be capped and buried. Pipeline end position on the banks shall be marked on the ground by installing location markers on both banks approved by Company.

4.8 **Permanent Pipeline Markers**

On both banks of each river crossing, Contractor shall install a Navigable Waterway Pipeline Crossing Warning Sign in accordance with Std. No. MEC/S/05/21/05. Contractor shall supply all materials and fabricate and install the markers as per reference drawing. Wherever feasible, the pipeline markers shall be installed on the embankments, however, exact location shall be decided based on site conditions and as directed by Company.

4.9 **Fencing**

Wherever specified, Contractor shall supply all materials and install G.I. Wire Chain link security fencing of size 10 m x 10 m x 25 m high with lockable steel gate around the pipe ends and test stations for temporary C.P. on both sides of each river crossing.

4.10 **Idle Time Preservation of Pipeline**

When so stated in the Contract, Contractor shall supply all materials and consumable including water and inhibitor and shall install all piping connections, valves, instrumentation, etc., and perform all works for preservation of pipeline by pressurization with inhibited water. Contractor shall use approved inhibitors and shall determine the required dosages of inhibitors and pressure for idle time preservation of the pipeline for a period of maximum six months nom the date of completion of construction. Corrosion inhibitors and dosages shall be subject to Company's approval prior to use.

4.11 **Final Clean up**

4.11.1 After completion of construction, Contractor shall clear the site of all balance material and debris and bentonite slurry. All balance pipe lengths shall be returned to Owner’s designated stock yard(s). Site/ ROW shall be cleared to the complete satisfaction of the land owner’s and authorities having jurisdiction. All such works shall be done at no extra cost to Owner. The Owner shall be indemnified against any/ all claims arising as a result thereof.

4.11.2 Contractor shall arrange for safe disposal of all surplus soil and bentonite slurry & corrosion inhibited test water so as to avoid any harm to the environment / occupants at locations duly approved by authorities and pollution control boards having jurisdiction and/or as instructed by Company without any extra cost.

5.0 **DOCUMENTATION**

5.1 In additional to the documents specified elsewhere in this specification. Contractor shall submit to the Owner the following documents/ records.

- Copies of the permits obtained from authorities having jurisdiction.

- Records of pre and post installation hydrostatic testing.
- Record of non-destructive testing of welds.
- Detailed drilling log and downhole data, including, but not limited to, the following :
  - i) Torque and pulling/pushing force
  - ii) Data on drilling fluid.
    - Density
    - Type of mud and additive employed.
    - Mixing, pumping and cleaning.

- Wash and drill pipe data, viz.,
  - i) Dimension and material properties.
  - ii) Data on API classification.
  - iii) Age of and type of inspection previously carried out on these pipes.

- Permits obtained from authorities having jurisdiction for the various works.
- Plan & profile of the drilled hole along with the water level variations.
- Records of hydrostatic pre-testing and final testing.
- Record of Non Destructive Testing of welds.
- Clearance certificates form the landowners and Authorities having jurisdiction regarding satisfactory clean-up and restoration of pipeline RoU and work areas.

- Clearance certificate from the land owners and authorities having jurisdiction regarding satisfactory clean-up and restoration of the pipeline ROW and work sites.

5.2 After completion of construction, Contractor shall prepare and furnish six sets of copies and two sets of reproducible of `As-built' for the crossings. As built drawings shall , as a minimum include the following information

- True profile of the crossing along the pipeline.
- True profile of the pipeline as installed and the depth of cover to top of pipe at regular intervals.
- Location of entry and exit point and angles of entry and exit alongwith lateral offset of exit point from the original pipeline alignment.
- Location and angle of field bends
- Location of pipeline markers.
- All As-Built drawings shall be prepared using software AutoCAD Release 2000 or above. Manually drafted drawings are not acceptable to Company. In addition, to the hard copies, as-built drawings shall also be submitted in electronic media i.e. CD / DVD.

5.3 All documents shall be in English language.

1.0 **Introduction** VOID

2.0 **Price Evaluation Basis:** VOID

3.0 **Compliance with Specification:** The Vendor shall be completely responsible for the design, materials, manufacture & fabrication, testing, inspection, preparation for shipment and transport of the above equipment strictly in accordance with the MR and all attachments thereto. At a minimum, all pressure-containing and pressure-controlling parts of Valves and Actuators shall be provided with EN 10204-3.2 certificates.

4.0 **Vendor's Scope:** Vendor scope of work includes the equipment with all internals and accessories shown on the datasheets, specifications and all unmentioned parts necessary for a satisfactory operation and testing, except those which are indicated to be out of the vendor's supply.

5.0 **Inspection:**

Inspection shall be in accordance with EN 10204 3.2, certification shall be issued for each dispatched valve. Vendor shall appoint any one of the TPIA for inspection purposes. Vendor has to intimate the TPIA name from below listed agencies to CLIENT/ MECON prior to performing any inspection activity.

i. Det Norske Veritas (DNV)
ii. Germanischer Lloyd
iii. Bureau Veritas
iv. Moody International
v. SGS
vi. Certification Engineer International Ltd (CEIL)
vii. Technische Ulierwachungs Verein (TUV)
viii. Velosi
ix. American Bureau Services (ABS)
x. AB-Vincotte
xi. Lloyd Register of Industrial Services
xii. VCS Quality Services Private Limited
xiii. Meenar Global

6.0 For all valves to be used in Gaseous Hydrocarbons service, impact & hardness tests/values as per clause 3.4, 3.5 & 3.6 of specification no. MEC/TS/05/21/002 shall be applicable.

7.0 Vendor shall quote spares separately for two years normal operation for valves & actuators as per price schedule Proforma. List of spares quoted shall be furnished as per attached Format.

8.0 Vendor to include the start-up and commissioning spares for valves & actuators (if applicable) in the quoted price for the valves. However, list of spares (start-up and commissioning) to be made available without prices as per attached Format.

9.0 Vendor to indicate the gross weight (in kg or Metric Ton) per unit, volume (in m3) per unit and dimensions (L x B x H) of package (wooden box, etc.) to accommodate unit quantity or number of quantities (as applicable).

10.0 Vendor must submit duly filled up & signed data sheets, checklist and forms .

11.0 Vendor shall establish the equivalence/superiority of any material proposed (With justification of material properties and availability) other than that specified in Datasheet. Vendor shall also indicate the ASTM equivalent of his proposed material as well as of all the AISI designated materials specified in datasheets.

12.0 Vendors to note that the minimum inspection and testing requirements of the valves shall be governed by attached QAP with this MR. However, vendor shall submit their QAP for approval covering the requirement specified in attached QAP.

13.0 Valve vendors to note that all the documents/drawings submitted by them as a part of their qualification documentation shall be considered only to assess their technical capability and shall in no way absolve them from complying with all the requirements of this tender. All items to be supplied by the Valve vendor shall be strictly in accordance with tender requirements.

14.0 In the event of Conflict/inconsistency among the documents attached/ referred, the following order of precedence generally shall govern in interpretation of various requirements/data.

- Material / Purchase Requisition & Notes to MR
- Datasheets
- Technical Specification
- Codes and Standards
- Vendor’s Standards

However, Owner/Consultant reserves the right to consider the most stringent requirement among the documents attached/referred.

15.0 Valve vendor/supplier shall submit hard copies of all documents/ drawings to MECON, as listed in columns B & C of table for document and data requirement under Clause 2.0 of MR and also in all technical specifications. The date of receipt of these documents/ drawings at MECON shall be deemed as the date of submission. If any documents/ drawings require re-submission due to any error/ deficiency noticed during review/ approval stage, in that event the additional time required by the valve vendor/supplier to get the revised document/ drawing reviewed/approved by MECON shall be solely to valve vendor's/supplier's account and in no case the valve vendor/ supplier shall be entitled for any time or cost benefit.

16.0 Valve vendors to note that the valves supplied by them shall be capable of withstanding the field hydro test pressure (i.e., 1.5 times of design pressure) for 6 to 24 hours test holding duration under field/site conditions. The valve's ball/plug/disc (Ball/Plug/Globe Valve) shall be kept in either partial or full open condition for entire test duration, and the test medium will be non-corrosive water. The vendor shall be liable for repair/ replacement of valve if found faulty during site hydro test at his risk & cost. All costs for associated activities like packaging, transportation etc. in connection to repair / replacement of valve shall be borne by the valve vendor. No claim shall be entertained by the Owner / Purchaser in this regard.

17.0 Vendors to note that packing & transportation of the valves shall be done strictly as per attached technical specification for handling and transportation.

18.0 Vendors to note that the entire ordered quantity shall be offered for MECON inspection as per the following table. In case no. of visits of MECON engineer becomes more than as specified in the table below for the complete order quantity, the vendor shall bear the touring expenditure of MECON/CLIENT engineers as per company rules.
CLIENT/MECON reserves the right to waive off this requirement in case of project exigencies.

S.No.	Size	Minimum Quantity for one lot
1	30" and higher	Upto 5 valves
2	16" to 28"	Upto 8 valves
3	8" to 14"	Upto 20 valves
4	¾" to 6"	Upto 200 valves

In case of any multiple of the ordered quantity the no. of valves shall be divided by quantity specified for one lot in the above-mentioned table to arrive at the no. of lots. No. of lots shall be determined by rounding off to the next integer.

19.0 Vendors to note that TPI inspection is either to be conducted before MECON inspection or in parallel. In no case TPI inspection shall be permitted after MECON inspection. For the valves where MECON inspection extent is 100% witness, TPI inspection may be allowed in parallel with MECON. However, for valves requiring 10% MECON witness inspection, vendor has to finish TPI inspection before raising call and upload TPI inspection report in Inspection Management System of MECON.

20.0 Extent of MECON witness during final inspection shall be as follows:

Sl. No.	Size range	Class	Mecon Inspection extent
1.	2" to 8"	150	10% random witness and document review for 100% valves.
2.	10" and more	150	100% witness.
3.	2" to 6"	300 and higher	10% random witness and document review for 100% valves.
4.	8" and more	300 and higher	100% witness.
5.	Below 2"	All classes	10% random witness and document review for 100% valves.

21.0 Strip Test: Vendor needs to demonstrate strip test of bolted body valves. For this test, one valve of each ordered size and rating shall be selected at random after successful hydro and pneumatic tests by TPI & MECON inspector. The valve shall be dismantled completely. Alloy steel parts shall be checked for compliance with the relevant material code using Positive material identification technique. Selected valve(s) shall then be re-assembled after replacing sacrificial parts like gaskets & O-rings, and complete final inspection as per approved QAP shall be carried out once again to ensure the repeatability of body seals and seats.

22.0 The vendor shall provide services of supervision during erection and commissioning of their supplied material. Minimum of Two man-days per MR item no. shall be considered for this purpose. If required, vendor shall depute competent persons from OEM of their respective supplied item during supervision of erection & commissioning to avoid any idling at site. However, if any quality / functionality related issues are reported from the installation site of vendor supplied equipment during erection and commissioning, vendor shall depute competent persons at site for and till satisfactory resolution of the same at vendor's own cost.

23.0 Valve vendor shall submit certification of their supplied valve's design life of minimum 25 years.

24.0 In Final Inspection stage, Vendor shall perform video recording for every test of each valve by declaring the valve serial number and body heat number at the start. The video shall be prompted with each stage of testing by manufacturer's QA/QC team members. Videos showing success of final tests shall be submitted in pen drive.

25.0 Vendor's scope shall also include unloading, verification, and handling of the supplied materials at the designated delivery locations, including unboxing, re-boxing, and provision of all required labour, equipment etc.

26.0 Length of pup piece (if provided) shall be minimum 1-D or 300mm on both ends (whichever is more) for 6" and above. For 4" & below valve size, pup piece of minimum 200 mm on both ends of butt weld valve is mandatory. Manufacturer to ensure that there will be no danger to seat insert / O-rings during shop welding of pup pieces as well as during any field welding.

27.0 Vent, Drain, Sealant Injection piping for extended stem valve shall be protected by steel enclosure to prevent damage during transportation.

28.0 Vendor must maintain shooting Sketches as per ASME B16.34 for RADIOGRAPHIC INSPECTION.

29.0 Manual operated valves shall be provided with gear operator with hand wheel / lever operator as specified below:

RATING	SIZE	Operator
#150	6" and larger	Gear Operator with hand wheel
	Less than 6"	Lever operator
#300	6" and larger	Gear Operator with hand wheel
	Less than 6"	Lever operator
#600	4" and larger	Gear Operator with hand wheel
	Less than 4"	Lever operator
#900	3" and larger	Gear Operator with hand wheel
	Less than 3"	Lever operator

30.0 However, if force required to open / close the valve under level operation exceeds the value specified in API 6D, then the vendor may offer gear operated valves.

31.0 The valve selected for cyclic test shall be subsequently undergo sealant injection test and strip down test in the same order.

32.0 API 6D valve design must comply to provisions for DRIVE TRAIN mentioned in API 6D.
Provide torque values corresponding to valve operational data as per ANNEX L of API 6D.
Provide drive train calculations in compliance to API 6D.

33.0 Torque table shall be provided with torque values (Break to open and End to close) at the stem gearbox assembly in following conditions:

a. Seat unpressurised.
b. Seat pressurized at design pressure from each side.
c. Seat pressurized at design pressure simultaneously from both sides with empty cavity.
d. For DIB-1 valves, seat pressurized from inside cavity at cavity relief pressure and no upstream and downstream pressure.

34.0 Gearbox design/selection shall be based on the maximum torque value at stem. Calculations to establish the handwheel effort at design torque mentioned above, need to be submitted.

35.0 For ENP coating, surface preparation must be by abrasive blasting to SA 3. ENP Coating must comply to ASTM B 733, Classification: SC4, Type-V. Post heat treatment for Ball shall be Class-2 to achieve required hardness and other items like seat ring / stem shall have Class -2 or Class -3 Heat Treatment as specified in ASTM 8733 to achieve differential hardness between mating components as per manufacturer standard practice. Coating shall be smooth, adherent, and free from visible blisters, pits, nodules, porosity and other defects. Inspection shall be as per ASTM B733, paragraph 7.2 and following minimum properties shall be tested:

- Hardness
- Thickness
- Alloy composition

36.0 For valves to be installed for Natural Gas service and designed to API 6D, the duration for Hydrostatic shell test, Hydrostatic seat test, Double Block and Bleed Test and Low-Pressure Pneumatic Seat Test- Test duration shall be twice that of the value specified in table of API 6D.

37.0 Minimum wall thickness shall be as per ASME B16.34 + 3 mm corrosion allowance.

38.0 Details of NDE requirements as stated in attached QAP shall be as follows:

Table 1 – NDE Requirement

Part	Cast	Forged/Bar
Body /closure/end connections/bonnet/ cover/gland housing/ Trunnion (if pressure containing)	VT1, RT3 or (RT1+ UT1)	VT2, UT2
Welding of body with connectors —for fully welded ball valves/ Pressure containing welds/ Pipe pup to valve welds or pipe pups	VT3,RT2orUT3	
Pup pieces/ transition pieces (if applicable)	VT3, RT2 or UT3	
Welding ends (50mm from weld end on each side)	VT1, RT3, UT4	VT2,UT2
Stem or Shaft	N/A	VT2,UT2
Ball	UT4	UT2
Note 1: Refer Table L2 of API 6D Latest edition for specification of the nomenclature and examination referred to in this table		
Trunnion may be pressure containing or pressure controlling, depending on design type. If the trunnion is a pressure containing part, then requirements for body shall apply.		

STANDARD TECHNICAL SPECIFICATION FOR BALL VALVES

SPECIFICATION NO.: MEC/TS/05/21/002

(OIL & GAS SBU)
MECON LIMITED
DELHI 110 092

PREPARED BY:	CHECKED BY:	APPROVED BY:	ISSUE DATE :

AMENDMENT STATUS

Sl. No.	Clause / Paragraph / Annexure / Exhibit / Drawing Amended	Page No.	Rev.	Date	By		Verified	
					Name	Sig.	Name	Sig.
1.	Cl. No. 4.6	4	1	April 09	Gurdeep Singh		K.K. De	
2.	Overall Revision	All	1	July 20	K.P. Singh		A.K. Tyagi	

Abbreviations :

ASME	:	American Society of Mechanical Engineers
ASTM	:	American Society for Testing and Materials
API	:	American Petroleum Institute
BHN	:	Brinell hardness number
DN	:	Nominal Size
HAZ	:	Heat Affected Zone
LC	:	Lock Close (valve locked in full close position)
LO	:	Lock Open (valve locked in full open position)
MSS-SP	:	Manufacturers Standardization Society – Standard Practice
NDT	:	Non Destructive Testing
NPS	:	Nominal Pipe Size
RTJ	:	Ring Type Joint
SSPC	:	Steel Structures Painting Council

CONTENTS

Sl.No.	Description
1.0	SCOPE
2.0	REFERENCE DOCUMENTS
3.0	MATERIALS
4.0	DESIGN AND CONSTRUCTION
5.0	INSPECTION AND TESTS
6.0	EXTENT OF INSPECTION & TESTING
7.0	TEST CERTIFICATES
8.0	PAINTING, MARKING AND SHIPMENT
9.0	SPARES AND ACCESSORIES
10.0	DOCUMENTATION
11.0	GUARANTEE
FIGURE-1	VENT, DRAIN & SEALANT INJECTION DETAILS

1.0 **SCOPE**

This specification covers the minimum requirements for design, manufacture, testing and supply of carbon steel ball valves of size DN 50 mm (2") and above and ANSI pressure rating class 150 to 900 to be used in on-shore pipeline systems handling non-sour hydrocarbons in liquid or gaseous phase, including Liquefied Petroleum Gas (LPG).

This specification does not cover ball valves for sour hydrocarbon (liquid / gas) service as defined in NACE standard MR-01-75.

2.0 **REFERENCE DOCUMENTS**

2.1 All valves shall be manufactured and supplied in accordance with the latest edition of American Petroleum Institute (API) Specification 6D / ISO 14313, with additions and modifications as indicated in the following sections of this specification.

2.2 Reference has also been made in this specification to the latest edition of the following Codes, Standards and Specifications:

ASME B 16.5	:	Pipe flanges and flanged fittings
ASMEB 16.10	:	Face-to-face and end-to-end dimensions of valves
ASME B 16.25	:	Butt welding ends
ASME B 16.34	:	Valves – flanged, threaded and welding ends
ASME B16.47	:	Large diameter steel flanges
ASME B 31.3	:	Process piping
ASME B 31.4	:	Pipeline transportation systems for liquid hydrocarbons and other liquids
ASME B 31.8	:	Gas transmission and distribution piping systems
ASME Sec VIII	:	Boiler and pressure vessel code - Rules for construction of pressure vessels
ASME Sec IX	:	Boiler and pressure vessel code - Welding and brazing qualifications
ASTM A 370	:	Standard test methods and definitions for mechanical testing of steel products
ASTM B 733	:	Autocatalytic nickel phosphorous coating on metals
API 6FA	:	Fire test for valves

API 607	:	Fire test for soft-seated quarter-turn valves
API 1104	:	Welding of pipelines and related facilities
BS EN ISO 10497	:	Testing of valves – Fire type-testing requirements
MSS-SP-6	:	Standard finishes for contact faces of pipe flanges and connecting-end flanges of valves and fittings
MSS-SP-44	:	Steel pipeline flanges
SSPC-VIS-1	:	Steel structures painting council-visual standard

2.3 **In case of conflict** between the requirements of this specification, API 6D and the Codes, Standards and Specifications referred in clause 2.2 above, the requirements of this specification shall govern. Order of precedence shall be as follows :

- Valve Data Sheets
- Material Requisition
- This Specification
- API 6D Specification
- Other Referred Codes & Standards
- Manufacturer's Standard

3.0 MATERIALS

3.1 Material for major components of the valves shall be as indicated in Valve Data Sheet. Other components shall be as per Manufacturer's standard (suitable for the service conditions indicated in Data Sheet) and shall be subject to approval by Purchaser. In addition, the material shall also meet the requirements specified hereinafter.

3.2 Carbon steel used for the manufacture of valves shall be fully killed.

3.3 The Carbon Equivalent (CE) of valve end connections which are subject to further field welding by Purchaser, shall not exceed 0.43% (as calculated by the following formula) on check analysis for each heat of steel used:

$$CE = \%C + \frac{\%Mn}{6} + \frac{\%Cr + \%Mo + \%V}{5} + \frac{\%Ni + \%Cu}{15}$$

3.4 For Valves specified to be used for Gas service or LPG service, Charpy V-notch test, on each heat of base material shall be conducted as per API 6D Clause 8.5, for all pressure containing parts such as body, end flanges and welding ends as well as bolting material for pressure containing parts. Unless stated otherwise, the Charpy V-notch test shall be conducted at 0 °C. Test procedure shall conform to ASTM A370. The average absorbed energy value of three full sized specimens shall be 27 J. The

minimum impact energy value for any one specimen of the three specimens analysed as above, shall not be less than 22 J.

When Low Temperature Carbon Steel (LTCS) materials are specified in Valve Data Sheet or offered by Manufacturer, the Charpy V-notch test requirements of applicable material standard shall be complied with.

3.5 For all such valves where carbon steel is used as ball material, the ball shall have 75 micrometer (0.003 inch) thick Electroless Nickel Plating (ENP) as per ASTM B733 with following classification : SC2, Type II, Class 2. The hardness of plating shall be minimum 50 RC.

3.6 For valves specified to be used for Gas service or LPG service, hardness test shall be carried out as per ASTM A370 for each method of manufacture and each heat of steel used in the manufacture of valves. A full thickness cross-section shall be taken for this purpose and the maximum hardness of the materials of valve components shall not exceed 248 HV_{10} .

3.7 All process-wetted parts, metallic and non-metallic, shall be suitable for the fluids and service specified by the Purchaser. The service gas composition shall be as given elsewhere in the Material Requisition. In addition, Manufacturer shall confirm that all wetted parts are suitable for treated water / seawater environment, which may be used during field testing.

3.8 Non-metallic parts of the valves (including O-rings, soft seal etc.) intended for hydrocarbon gas service at pressures of PN 100 (600 #) and above shall be resistant to explosive decompression.

4.0 DESIGN AND CONSTRUCTION

4.1 Valve design shall meet the requirements of API 6D and other referred codes and shall be suitable for the service conditions indicated in Valve Data Sheet. The ASME Boiler & Pressure Vessel Code, Section VIII, Division 1, may be used to design the valve body. Allowable stress requirements shall comply with the provisions of ASME B31.3. In addition, corrosion allowance indicated in Valve Data Sheet shall be considered in valve design. However, the minimum wall thickness shall not be less than the minimum requirement of ASME B16.34. The Manufacturer shall have a valid license to use API 6D monogram for manufacture of ball valves.

4.2 For above ground valves, valve body design shall be either fully welded or bolted type, as indicated in Valve Data Sheet. Valve body joints with threads are not permitted.

For buried valves, valve body design shall be fully welded type only. Valve body joints with bolts or threads are not permitted.

4.3 Ball shall be of single piece, solid type construction.

4.4 Valves shall be Full Opening (FO) or Reduced Opening (RO) as indicated in Valve Data Sheet. FO valves shall be suitable for the passage of all types of pipeline scraper and inspection pigs on regular basis without causing damage to either the valve component or the pig. The FO valve shall provide an unobstructed profile for pigging operations in either direction. FO valves shall be designed to minimize accumulation of debris in the seat ring region to ensure that valve movement is not impeded.

The opening size of RO valves shall be corresponding to that of a FO valve of smaller nominal diameter as indicated in table below. For sizes of a particular rating not covered in API 6D, the opening sizes of the RO valve shall be as per Manufacturer's standard.

Nominal Valve Size	Nominal Valve Size for Reduced Opening	Nominal Valve Size	Nominal Valve Size for Reduced Opening
DN $_{mm}$ (NPS $_{inches}$)	DN $_{mm}$ (NPS $_{inches}$)	DN $_{mm}$ (NPS $_{inches}$)	DN $_{mm}$ (NPS $_{inches}$)
50 (2)	50 (2)	600 (24)	500 (20)
80 (3)	50 (2)	650 (26)	550 (22)
100 (4)	80 (3)	700 (28)	600 (24)
150 (6)	100 (4)	750 (30)	600 (24)
200 (8)	150 (6)	800 (32)	650 (26)
250 (10)	200 (8)	850 (34)	700 (28)
300 (12)	250 (10)	900 (36)	750 (30)
350 (14)	250 (10)	950 (38)	800 (32)
400 (16)	300 (12)	1000 (40)	850 (34)
450 (18)	350 (14)	1050 (42)	900 (36)
500 (20)	400 (16)	1200 (48)	1050 (42)
550 (22)	450 (18)		

4.5 Ball mounting shall be trunnion / pivot type or as indicated in Valve Data Sheet. Ball mounting, either trunnion or floating, unless otherwise specified, shall be as follows.

Sl. No.	ANSI Pressure Rating	Nominal Valve Size (NPS $_{inches}$)	
		Floating Ball	Trunnion Mounted
1.	150#	$\leq$ 8"	> 8"
2.	300#	$\leq$ 4"	> 4"
3.	600#	Nil	$\geq$ 2"

Valve design shall minimize the possibility of debris ingress into the trunnion as far as practicable.

4.6 Valve seats shall have metal to metal contact. O-rings or other seals, if used for drip tight sealing, shall be encased in a suitable groove in such a manner that it can not be removed from seat ring and there is no extrusion during opening or closing operation of valve at maximum differential pressure corresponding to valve class rating. The seat rings shall be so designed as to ensure sealing at low as well as high differential pressures.

4.7 Valves shall have double block and bleed feature to facilitate complete flushing, draining and venting of the valve body cavity.

4.8 For valves to be used in liquid service, the body cavity over-pressure shall be prevented by self relieving seat rings / assemblies. A pressure relief hole in the ball is not permitted. Self relieving seat rings shall relieve at a body cavity differential pressure not exceeding 50% of the valve class rating pressure.

4.9 Valves shall be designed to withstand a sustained internal vacuum of at least 1 (one) milli-bar in both open and closed positions.

4.10 FO valves of nominal size DN 200 mm (8") & above and RO valves of nominal size DN 250 mm (10") & above shall have provision for secondary sealant injection under full line pressure for seat and stem seals. All sealant injection connections shall be provided with a needle valve, a grease fitting and non-return valve. Valve design shall have a provision to replace the sealant injection fitting under full line pressure. Location and arrangement of sealant points shall be as per Figure-1.

4.11 Valves shall be provided with vent and drain connections. Location and arrangement of vents and drains shall be as per Figure-1. Body vent and drain shall be provided with valves (ball or plug type). Number and size shall be as per Figure-1.

4.12 Valve design shall ensure repair of stem seals / packing under full line pressure.

4.13 a) Valve ends shall be either flanged or butt welded or one end flanged and one end butt welded as indicated in Valve Data Sheet. Flanges of the flanged end cast/ forged body valves shall be integrally cast / forged with the body of valve. Face-to-face/ end-to-end dimensions shall conform to API 6D. Face-to-face and end-to-end dimensions for valve sizes not specified in API 6D shall be in accordance with ASME B 16.10. Face-to-face and end-to-end dimensions not shown in API 6D or in ASME B 16.10 shall be as per Manufacturer Standard and shall be subject to approval by Purchaser.

b) Flanged ends shall have flanges as per ASME B16.5 for valve sizes up to DN 600 mm (24 inches) excluding DN 550 mm (22 inches) and as per MSS-SP-44 / ASME B 16.47 series A for valve sizes DN 550 mm (22 inches) & for DN 650 mm (26 inches) and above. Flange face shall be either raised face or ring joint type (RTJ) as indicated in Valve Data Sheet. Flange face finish shall be serrated or smooth as indicated in Valve Data Sheet. Smooth finish when specified shall be 125 to 200 microinches AARH. In case of RTJ flanges, the groove hardness shall be minimum 140 BHN.

c) Butt weld end preparation shall be as per ASME B16.25. The thickness of the pipe to which the valve has to be welded shall be as indicated in Valve Data Sheet. Valves shall be without transition pups, unless otherwise specified in Valve Data sheet. In case significant difference exists between thickness of welding ends of valve and connecting pipe, the welding ends of valve shall have bevel preparation as per ASME B31.4 or ASME B31.8, as applicable.

4.14 Design of weld end valves shall be such that during field welding operations, the soft seals or plastic components of the valve (where ever used) are not liable to be damaged. The Manufacturer shall furnish necessary field welding instructions and post-weld test procedure to demonstrate integrity and leak-tightness of valves after field welding operations.

4.15 Valves shall be provided with ball position indicator and stops of rugged construction at the fully open and fully closed positions.

4.16 FO valves of nominal size ≥ DN 200 mm (8") and RO valves of nominal size ≥ DN 250 mm (10") shall be equipped with support foot and lifting lugs. Tapped holes and eye bolts shall not be used for lifting lugs. Height of support foot shall be kept a minimum. The location and size of support foot / lifting lugs shall ensure unrestrictive operation of vent / drain valves.

4.17 Valve design shall be such as to avoid bimetallic corrosion between carbon steel and high alloy steel components. Suitable insulation shall be provided as required.

4.18 Valves shall be of fire resistant design as per API 607/BS EN ISO 10497/API 6FA, as indicated in Valve Data Sheet.

4.19 Valves shall be provided with anti-static devices to ensure electrical continuity between stem / ball and valve body.

4.20 Valves shall be suitable for either buried or above ground installation as indicated in Valve Data Sheet.

4.21 When stem extension requirement is indicated in Valve Data Sheet, the valves shall have the following provisions :

a) Valves provided with stem extension shall have water proof outer casing. Length of stem extension shall be as indicated in Valve Data Sheet. The length indicated corresponds to the distance between centerline of the valve opening and the top of mounting flange for valve operating device (gear operator / power actuator as applicable).

b) Vent and drain connections and sealant injection lines shall be terminated adjacent to the valve operator by means of suitable piping anchored to the valve body. Pipe used shall be API 5L Gr. B / ASTM A 106 Gr. B, with Sch. 80. Fittings shall be ASTM A 105 / ASTM 234 Gr. WPB, Socket Welded, ANSI class 6000.

c) Stem extension and stem housing design shall be such that the complete assembly will form a rigid unit giving a positive drive under all conditions with no possibility of free movement between valve body, stem extension or its operator.

d) Outer casing of stem extension shall have 3/8" or ½" NPT plugs at the top and bottom, for draining and filling with oil to prevent internal corrosion.

4.22 **Operating Devices**

a) Valves shall have a power actuator or manual operator as indicated in Valve Data Sheet. In case of manual operator, valve sizes $\leq$ DN 100 mm (4 inches) shall be wrench operated and valve sizes $\geq$ DN 150 mm (6 inches) shall be gear operated. Each wrench – operated valve shall be supplied with wrench. Valve design shall be such that damage due to malfunctioning of the operator or its controls will only occur in the operator gear train or power cylinder and that damaged parts can be replaced without the valve cover being removed.

b) The power actuator shall be in accordance with the Purchaser specification issued for the purpose and as indicated in Valve and Actuator Data Sheet. Operating time shall be as indicated in Valve Data Sheet. Valve operating time shall correspond to full close to full open/full open to full close under maximum differential pressure corresponding to the valve rating. For actuated valves, the actuator torque output shall be 1.25 times the break torque required to operate the ball valve under the maximum differential pressure corresponding to the valve class rating.

c) For manual operator of all valves, the diameter of the hand wheel or the length of operating wrench shall conform to API 6D requirements and be such that under maximum differential pressure, the total force required to operate the valve does not exceed 350 N. Manufacturer shall also indicate the number of turns of hand wheel (in case of gear operators) required for operating the valve from full open to full close position.

d) Direction of operation of hand wheel or wrench shall be in clock-wise direction while closing the valve. Hand wheels shall not have protruding spokes.

e) Gear operators, when provided, shall have a self locking provision and shall be fully encased, in water proof/ splash proof/ dust proof/ weather proof enclosure and shall be filled with suitable grease.

f) Operating devices shall be designed for easy operation of the valve under maximum differential pressure corresponding to the valve rating.

4.23 All welds shall be made by welders and welding procedures qualified in accordance with the provisions of ASME Section IX. The procedure qualification shall include impact test and hardness test and shall meet the requirements of clauses 3.4 and 3.6 of this specification, respectively.

4.24 All welds shall be stress relieved in accordance with ASME Section VIII.

4.25 Repair by welding is not permitted for fabricated and forged body valves. However, repair by welding as per ASME B16.34 is permitted for cast body valves. Such repairs shall be carried out at casting supplier's care only. Repair shall be carried out before any heat treatment of casting is done. Repair welding procedure qualification shall also include impact test and hardness test and shall meet the requirements of clauses 3.4 & 3.6 of this specification, respectively.

4.26 The tolerance on internal diameter and out of roundness at the ends for welded end valves shall be as per applicable connected pipe specification as indicated in Valve Data Sheet.

4.27 When indicated in Material Requisition, valves shall have locking device to lock the valve either in full open (LO) or full close (LC) positions. Locking devices shall be permanently attached to the valve operator and shall not interfere with operation of the valve.

4.28 Valve stem shall be capable of withstanding the maximum operating torque required to operate the valve against the maximum differential pressure corresponding to applicable class rating. The combined stress shall not exceed the maximum allowable stresses specified in ASME Section VIII, Division I. In case of power actuated valves, the valve stem shall be designed for maximum output torque of the selected power actuator (including gear box, if any) at valve stem.

5.0 INSPECTION AND TESTS

5.1 The Manufacturer shall perform all inspection and tests as per the requirements of this specification and the relevant codes, prior to shipment, at his works. Such inspection and tests shall be, but not limited to, the following:

5.1.1 All valves shall be visually inspected. The internal and external surfaces of the valves shall be free from any strikes, gouges and other detrimental defects. The surfaces shall be thoroughly cleaned and free from dirt, rust and scales.

5.1.2 Dimensional check on all valves shall be carried out as per the Purchaser approved drawings.

5.1.3 Chemical composition and mechanical properties shall be checked as per relevant material standards and this specification, for each heat of steel used.

5.1.4 Non-destructive examination of individual valve material and components consisting of, but not limited to castings, forgings, plate and assembly welds shall be carried out by the Manufacturer.

a) Body castings of all valves shall be radiographically examined on 100% of the surface of critical areas as per ASME B16.34. Procedure and acceptance criteria shall be as per ASME B16.34. The extent of radiography shall be as follows:

ANSI Pressure Rating	Valve Size	Extent of Radiography
150 #	All sizes	Nil
300 #	≤ DN 400mm (16") ≥ DN 450mm (18")	Nil 100%
≥ 600 #	All sizes	100%

All castings shall be wet magnetic particle inspected 100% of the internal surfaces. Method and acceptance shall comply with ASME B.16.34.

b) All valves, with body fabricated from plates or made by forgings, shall be ultrasonically examined in accordance with the procedure and acceptance standard of Annexure E of ASME B16.34.

All forgings shall be wet magnetic particle inspected 100% of the internal surfaces. Method and acceptance shall comply with ASME B 16.34

c) Bodies and bonnets made by welded assembly of segments of castings, forgings, plates or combinations thereof shall be examined, as applicable, by methods of clause 5.1.4 a) for cast components or clause 5.1.4 b) for forged components and plates.

5.1.5 Full inspection by radiography shall be carried out on all welds of pressure containing parts. Acceptance criteria shall be as per ASME B 31.4 or ASME B31.8, as applicable, and API 1104.

5.1.6 Welds, which in Purchaser's opinion cannot be inspected by radiographic methods, shall be checked by ultrasonic or magnetic particle methods and acceptance criteria shall be as per ASME Section VIII, Division 1, Appendix 12 and Appendix 6, respectively.

5.1.7 a) All finished wrought weld ends subject to welding in field shall be 100% ultrasonically tested for lamination type defects for a distance of 50mm from the end. Laminations shall not be acceptable.

b) Weld ends of all cast valves subject to welding in field shall be 100% radiographically examined and acceptance criteria shall be as per ASME B16.34.

c) After final machining, all bevel surfaces shall be inspected by dye penetrant or wet magnetic particle methods. All defects longer than 6.35 mm are rejected, as are defects between 6.35 mm and 1.59mm that are separated by a distance less than 50 times their greatest length. Rejectable defects must be removed. Weld repair of bevel surface is not permitted.

5.1.8 All valves shall be tested in compliance with the requirements of API 6D. During pressure testing, valves shall not have sealant lines and other cavities filled with sealant, grease or other foreign material. The drain, vent and sealant lines shall be

either included in the hydrostatic shell test or tested independently. Test pressure shall be held for at least 30 minutes. No leakage is permissible during hydrostatic testing. The body cavity self-relieving feature meeting the requirements of clause 4.8 of this specification shall also be checked.

5.1.9 A supplementary air seat test as per API 6D (Annex B, Clause B.3.3, Type II) shall be carried out for all valves. A bubble tight seal is required without the use of any sealant. No leakage is allowed. Test pressure shall be held for at least 15 minutes.

5.1.10 Manufacturer who intends bidding, must submit at bid stage, certificate and report for successful fire type-tests for valves in accordance with API-607/ BS EN ISO 10497 / API 6FA, as applicable in Valve Data Sheet.

Failure to comply with this requirement shall be a cause of rejection of the Bidder's offer.

5.1.11 Valves shall be subjected to Operational Torque Test as per API 6D (Annex B, Clause B.6) under hydraulic pressure equal to maximum differential pressure corresponding to the valve pressure class rating.

For manual operator of all valves, it shall be established that the force required to operate the valve does not exceed the requirements stated in clause 4.22(c) of this specification.

5.1.12 Power actuated valves shall be tested after assembly of the valve and actuator at the valve Manufacturer's works. At least five Open-Close-Open cycles without internal pressure and five Open-Close-Open cycles with maximum differential pressure shall be performed on the valve actuator assembly. The time for Full Open to Full close shall be recorded during testing. If required, the actuator shall be adjusted to ensure that the opening and closing times are within the limits stated in Actuator Data Sheet issued for the purpose.

Hand operator provided on the actuator shall also be checked after above testing, for satisfactory manual over-ride performance.

These tests shall be conducted on minimum one valve out of a lot of five (5) valves of the same size, rating and the actuator model / type. In case the tests do not meet the requirements, retesting / rejection of the lot shall be decided by Purchaser's Inspector.

5.1.13 Subsequent to successful testing as specified in clause 5.1.11 and 5.1.12 above, one (1) valve out of the total ordered quantity shall be randomly selected by the Purchaser's Representative for cyclic testing as mentioned below :

a) The valve shall be subjected to at least 100 Open-Close-Open cycles with maximum differential pressure corresponding to the valve rating.

b) Subsequent to the above, the valve shall be subjected to hydrostatic test and supplementary air seat test in accordance with clause 5.1.8 and 5.1.9.

In case this valve fails to pass these tests, the valve shall be rejected and two more valves shall be selected randomly and subjected to testing as indicated above. If both valves pass these tests, all valves manufactured for the order (except the valve that failed) shall be deemed acceptable. If either of the two valves fails to pass these tests, all valves shall be rejected or each valve shall be tested at the option of Manufacturer.

Previously carried out test of similar nature shall be considered acceptable if the same has been carried out by Manufacturer in last two years. Valves of two sizes below and two sizes above the size of valve previously tested, and rating similar or one rating lower of valve tested previously, shall be qualified.

5.1.14 Checks shall be carried out to demonstrate that the dissimilar metal used in the valves are successfully insulated as per the requirement of clause 4.17 of this specification.

5.1.15 When indicated in Valve Data Sheet, valves shall be subjected to anti-static testing as per supplementary test requirement of API 6D (Annex B, Clause B.5).

5.2 Purchaser reserves the right to perform stage-wise inspection and witness tests as indicated in clause 5.1 above at Manufacturer's works prior to shipment. Manufacturer shall give reasonable access and facilities required for inspection to the Purchaser's Inspector.

Purchaser reserves the right to require additional testing at any time to confirm or further investigate a suspected fault. The cost incurred shall be to Manufacturer's account.

In no case shall any action of Purchaser or his Inspector relieve the Manufacturer of his responsibility for material, design, quality or operation of valves.

Inspection and tests performed/ witnessed by the Purchaser's Inspector shall in no way relieve the Manufacturer's obligation to perform the required inspection and tests.

6.0 EXTENT OF INSPECTION & TESTING

6.1 Purchaser's Inspector shall perform inspection and witness tests on all valves or as indicated in the Quality Assurance Plan (QAP) attached with this specification.

6.2 The hydrostatic testing and cyclic opening and closing of the valves with the operator shall be witnessed by Purchaser's Inspector.

7.0 TEST CERTIFICATES

7.1 Manufacturer shall submit the following certificates:

a) Mill test certificates relevant to the chemical analysis and mechanical properties of the materials used for valve construction as per the relevant standards.

b) Test certificates of hydrostatic and pneumatic tests complete with records of timing and pressure of each test.

c) Test reports on radiograph and ultrasonic inspection.

d) Test report on operation of valves conforming to clause 5.1.11, 5.1.12 and 5.1.13 of this specification.

e) All other test reports and certificates as required by API 6D and this specification.

The certificates shall be valid only when signed by Purchaser's Inspector. Only those valves which have been certified by Purchaser's Inspector shall be despatched from Manufacturer's works.

8.0 PAINTING, MARKING & SHIPMENT

8.1 Valve surface shall be thoroughly cleaned, freed from rust and grease and applied with sufficient coats of corrosion resistant paint. Surface preparation shall be carried out by shot blasting to SP-6 in accordance with "Steel Structures Painting Council – Visual Standard SSPC-VIS-1". For valves to be installed underground, when indicated in Valve Data Sheet, the external surfaces of the buried portion of valves shall be painted with three coats of suitable coal tar epoxy resin with a minimum dry film thickness of 300 microns.

8.2 Manufacturer shall indicate the type of corrosion resistant paint used, in the drawings submitted for approval.

8.3 All valves shall be marked as per API 6D. The units of marking shall be metric except Nominal Diameter which shall be in inches. Marking shall be done by die-stamping on the bonnet or on the housing. However, for buried valves, the marking shall be done on the above ground portion of the stem housing only.

8.4 Valve ends shall be suitably protected to avoid any damage during transit. All threaded and machined surfaces subject to corrosion shall be well protected by a coat of grease or other suitable material. All valves shall be provided with suitable protectors, for flange faces, securely attached to the valves. Bevel ends shall be protected with metallic or high impact plastic bevel protectors.

8.5 All sealant lines and other cavities of the valve shall be filled with sealant before shipment.

8.6 Packaging and shipping instructions shall be as per API 6D.

8.7 On packages, following shall be marked legibly with suitable marking ink :

a) Order Number
b) Manufacturer's Name
c) Valve Size and Rating
d) Tag Number
e) Serial Number

9.0 SPARES & ACCESSORIES

9.1 Manufacturer shall furnish list of recommended spares and accessories for valves required during start-up and commissioning and supply of such spares shall be included in the price quoted by Manufacturer.

9.2 Manufacturer shall furnish list of recommended spares and accessories required for two years of normal operation and maintenance of valves and price for such spares shall be quoted separately.

9.3 Manufacturer shall quote for spares & accessories as per Material Requisition.

10.0 DOCUMENTATION

10.1 At the time of bidding, Manufacturer shall submit the following documents:

a) General arrangement / assembly drawings showing all features and relative positions and sizes of vents, drains, gear operator / actuator, painting, coating and other external parts together with overall dimensions as well as weights of valve & actuator.

b) Sectional drawing showing major parts with reference numbers and material specification. In particular, a blow-up drawing of ball-seat assembly shall be furnished complying the requirement of clause 4.6 of this specification.

c) Reference list of similar ball valves manufactured and supplied in last five years indicating all relevant details including project, year, client, location, size, rating, service, etc.

d) Torque curves for the power actuated valves along with the break torque and maximum allowable stem torque. In addition, sizing criteria and torque calculations shall also be submitted for power actuated valves.

e) Descriptive technical catalogues of the Manufacturer.

f) Copy of valid API 6D certificate.

g) Details of support foot, including dimensions and distance from valve centre line to bottom of support foot.

h) Quality Assurance Plan enclosed with this tender duly signed, stamped and accepted.

i) List of recommended spares required during start-up and commissioning.

j) List of recommended spares required for 2 years of normal operation and maintenance.

k) Other documents / drawings / data as per Material Requisition.

10.2 Within two weeks of placement of order, the Manufacturer shall submit six copies of, but not limited to, the following drawings, documents and specifications for Purchaser's final approval :

a) Detailed sectional arrangement drawings showing all parts with reference numbers and material specifications as referred to in clause 10.1 above.

b) Assembly drawings with overall dimensions and features. Drawing shall also indicate the number of turns of hand wheel (in case of gear operators) required for operating the valve from full open to full close position and the painting scheme. Complete dimensional details of support foot (where applicable) shall be indicated in these drawings as referred to in clause 10.1 above.

c) Welding, heat treatment and testing procedures.

d) Procedure for cyclic testing.

e) Details of corrosion resistant paint to be applied on the valves.

f) Design calculation for pressure containing parts.

g) Other documents / drawings / data as per Material Requisition.

Manufacture of valves shall commence only after approval of the documents indicated in clause 10.2a) to 10.2c) above. Once approval has been given by Purchaser, any changes in design, material and method of manufacture shall be notified to Purchaser whose approval in writing of all changes shall be obtained before the valve is manufactured.

10.3 Within 2 weeks from the approval date, Manufacturer shall submit to Purchaser six copies of the approved drawings, documents and specifications as listed in clause 10.2 above.

10.4 Prior to shipment, Manufacturer shall submit six hard copies and six soft copies (on CD-ROMs) of the following:

a) Test certificates as per clause 7.0 of this specification.

b) Manual for installation, erection, maintenance and operation instructions, including a list of recommended spares for the valves.

c) Other documents / drawings / data as per Material Requisition.

10.5 All documents shall be in English language.

10.6 **The above documents & data requirements shall also be supplemented by all requirements of clause 2.0 of the Material Requisition.**

11.0 GUARANTEE

11.1 Manufacturer shall guarantee that the materials and machining of valves and fittings comply with the requirements in this specification and in the Purchase Order.

11.2 Manufacturer is bound to replace or repair all valve parts which should result defective due to inadequate engineering or to the quality of materials and machining.

11.3 If valve defect or malfunctioning cannot be eliminated, Manufacturer shall replace the valve without delay,

11.4 Any defect occurring during the period of Guarantee shall be attended to by making all necessary modifications and repair of defective parts free of charge to the Purchaser as per the relevant clause of the bid document.

11.5 All expenses shall be to Manufacturer's account.

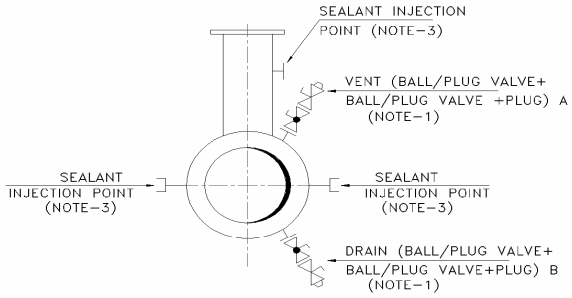

ABOVE GROUND INSTALLATION

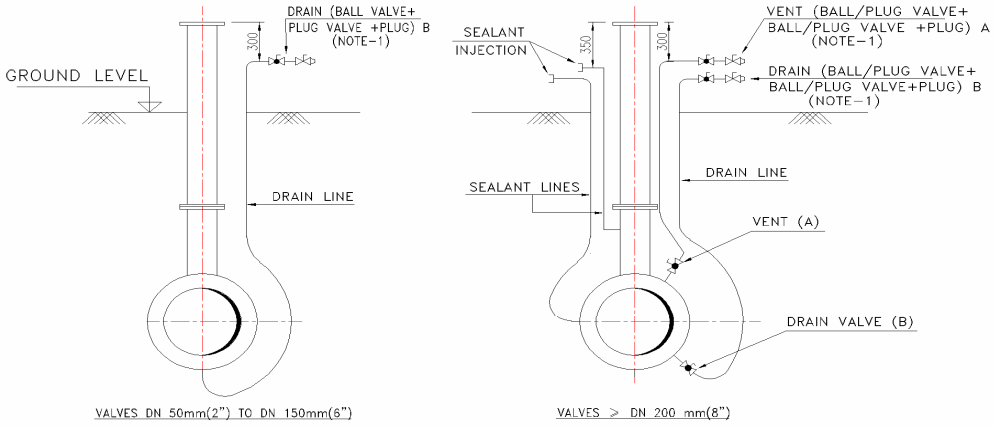

UNDERGROUND INSTALLATION

SIZES OF VENT & DRAIN CONNECTIONS		
NOM. VALVE SIZE	A, DN(mm)	B, DN(mm)
50 TO 150	–	15
200 TO 600	15	25
750 & ABOVE	15	50 (REFER NOTE-2)

LEGEND:
- BALL VALVE
- PLUG VALVE
- PLUG

NOTES:
1. ALL VALVES (BALL OR PLUG) AND PLUGS FOR A AND B SHALL BE APPROVED BY THE PURCHASER.
2. VALVES OF SIZE 50mm SHALL BE MANUFACTURED AS PER API-6D.
3. SEALANT INJECTION POINTS SHALL BE PROVIDED FOR FULL OPENING VALVES OF NOMINAL VALVE SIZE 200mm (8") & ABOVE AND REDUCED OPENING VALVES OF NOMINAL VALVE SIZE, DN 250mm (10") AND ABOVE ONLY.
3. IN BURIED SECTION, ALL VENT & DRAIN CONNECTION SHALL BE OF WELDED CONSTRUCTION.

FIGURE-1

VENT, DRAIN & SEALANT INJECTION DETAILS

PROCESS & PIPING DESIGN SECTION
MECON LIMITED

DELHI - 110 092

TECHNICAL SPECIFICATION
FOR
PLUG VALVES
(NB ≥ 2")

SPECIFICATION NO.: MEC/TS/05/62/003, Rev-2

CONTENTS

Sl.No.	Description	Page No.
1.0	SCOPE	2
2.0	REFERENCE DOCUMENTS	2
3.0	MATERIALS & TEST PROCEDURES	3
4.0	DESIGN & CONSTRUCTION	4
5.0	INSPECTION & TESTS	7
6.0	EXTENT OF INSPECTION & TESTING	9
7.0	TEST CERTIFICATES	9
8.0	PAINTING, MARKING & SHIPMENT	10
9.0	SPARES & ACCESSORIES	10
10.0	DOCUMENTATION	11
11.0	GUARANTEE	12

1.0 SCOPE

This specification covers the minimum requirements for design, manufacture and supply of carbon steel plug valves of size DN 50mm (2") and above and ANSI Class 150# thru 900# for use in onshore pipeline systems handling non sour hydrocarbons in liquid phase or gaseous phase including Liquefied Petroleum Gas (LPG).

2.0 REFERENCE DOCUMENTS

2.1 All valves shall be manufactured and supplied in accordance with the Twenty Second Edition, January, 2002, or the latest edition of American Petroleum Institute (API) Specification 6D, twenty first edition, 1994 including supplement 1 & 2 thereof with additions and modifications as indicated in the following sections of this specification.

2.2 Reference has also been made in this specification to the latest edition of the following Codes, Standards and Specifications :

ASME B 16.5	:	Pipe flanges and flanged fittings
ASME B 16.25	:	Buttwelding ends
ASME B 16.34	:	Valves – Flanged, threaded and welding end
ASME B16.47	:	Large diameter steel flanges
ASME B 31.3	:	Chemical & process plant piping system
ASME B 31.4	:	Liquid transportation systems for hydrocarbons and other liquids
ASME B 31.8	:	Gas transmission and distribution piping systems
ASME Sec.VIII	:	Boiler and pressure vessel code
ASTM A 370	:	Standard test methods and definitions for mechanical testing of steel products
ASTM B 733	:	Autocatalytic nickel phosphorous coating on metals
API 6FA	:	Fire test for valves
API 1104	:	Welding of pipelines and related facilities
BS:6755 (Part-II)	:	Testing of valves – Specification for fire type - testing requirements
MSS-SP-6	:	Standard finishes for contact faces of pipe flanges and connecting-end flanges of valves and fittings

MSS-SP-44 : Steel pipeline flanges

SSPC-VIS-1 : Steel structures painting council-visual standard

2.3 **In case of conflict** between the requirements of this specification, API 6D and the Codes, Standards and Specifications referred in clause 2.2 above, the requirements of this specification shall govern. Order of precedence shall be as follows :

- Data Sheets
- This Specification
- API 6D Specification
- Other Referred Codes & Standards
- Manufacturer's Standard

3.0 MATERIALS & TEST PROCEDURES

3.1 Material for major components of the valves shall be as indicated in Valve Data Sheet. Other components shall be as per Manufacturer's standard which will be subject to approval by Purchaser.

3.2 Carbon steel used for the manufacture of valves shall be fully killed.

3.3 Chemical composition (check analysis) of valve end connection which are subject to further welding by Purchaser shall meet the following requirements for each heat of steel used:

a) Carbon : 0.22% (max.)
b) Manganese : 1.70 % (max.)
c) Silicon : 0.55 % (max.)
d) Phosphorus : 0.030 % (max.)
e) Sulphur : 0.030 % (max.)

Total percentage of Vanadium, Niobium and Titanium shall not exceed 0.20. Residual elements shall not exceed the following limits :

a) Nitrogen : 0.019 %
b) Nickel : 0.30 %
c) Copper : 0.20 %
d) Aluminum : 0.070 %
e) Chromium : 0.15 %
f) Molybdenum : 0.05 %

Carbon equivalent (CE) as calculated by the following shall not exceed 0.45%.

$$CE = C + \frac{Mn}{6} + \frac{Cr + Mo + V}{5} + \frac{Ni + Cu}{15}$$

3.4 For valves specified for Gas Service or high vapour pressure liquid service, charpy V-Notch test on each heat of base material shall be conducted as per API 6D, for all pressure containing parts such as body, end flanges and welding ends as well as the bolting material for pressure containing parts. Unless specified otherwise in Valve Data Sheets, the Charpy impact test shall be conducted at 0°C. The Charpy impact test specimen shall be taken in the direction of principal grain flow and notched perpendicular to the original surface of plate or forging.

Unless specified otherwise in Valve Data Sheets, the minimum average absorbed energy per set of three specimens shall be 27 J with an individual minimum per specimen of 22 J.

3.5 For valves specified for Gas Service or high vapour pressure liquid service, the hardness of base material of body and principal parts of the valve such as plug, stem, etc., shall not exceed 22 RC.

3.6 Plug for valve size DN 200mm (8") and above or as specified in Valve Data Sheets shall have Electroless Nickel Plating (ENP) or equivalent. The hardness of plating shall be minimum 50 RC. Manufacturer shall ensure that the adhesive strength of plating is sufficient so as to prevent peeling of plating during operation of the valve.

3.7 All process-wetted parts, metallic and non-metallic, shall be suitable for the fluids and service specified by the Purchaser. The service gas composition when applicable shall be as given in Annexure-I.

4.0 DESIGN & CONSTRUCTION

4.1 The Manufacturer shall have a valid license to use API 6D monogram for manufacture of Plug Valves.

4.2 Valve pattern shall be short, regular or venturi as specified in the following table:

Class	Size Range, NB mm (inch)	Pattern
150	50-100 (2-4)	Short
	150-300 (6-12)	Regular
	350 (14) & above	Venturi
300	50-100 (2-4)	Short
	150-250 (6-10)	Regular
	300 (12) & above	Venturi
600	50-250 (2-10)	Regular
	300 (12) & above	Venturi
900	50-250 (2-10)	Regular
	300 (12) & above	Venturi

4.3 Valve shall have an inherent feature using line pressure to ensure that the line pressure cannot cause taper locking of the plug/ plug movement into taper i.e. valves shall be of pressure balanced design.

4.4 Cover shall be bolted to the body and screwed connections are not acceptable.

4.5 Soft seats to achieve a seal between plug and body are not permitted.

4.6 All valves shall have provisions for secondary sealant injection under full line pressure for seat and stem seals. Sealant injection points shall be provided with a ball type check valve or needle valve to replace the sealant injection fitting under full line pressure.

4.7 Valves shall have vent and drain connections as per API 6D.

4.8 When specified in the Valve Data Sheet, valves shall be designed to withstand a sustained internal vacuum of at least one milli-bar in both open and closed position.

4.9 Valve design shall ensure repair of gland packing under full line pressure.

4.10 a) Valve ends shall be either flanged or butt welded or one end flanged and one end butt welded as indicated in Valve Data Sheet. Flanges of the flanged end cast/ forged body valves shall be integrally cast/forged with the body of valve. Face-to-face/ end-to-end dimensions shall conform to API 6D.

b) Flanged end shall have dimensions as per ASME B16.5 for valve sizes upto DN 600mm (24 inches) excluding DN 550mm (22 inches) and as per MSS-SP-44 for valve sizes DN 550mm (22 inches) & for DN 650mm (26 inches) and above. Flange face shall be either raised face or ring joint type as indicated in Valve Data Sheet. Flange face finish shall be serrated or smooth as indicated in Valve Data Sheet. Smooth finish when specified shall be 125 to 200 AARH. In case of RTJ flanges, the groove hardness shall be minimum 140 BHN.

c) Butt weld end preparation shall be as per ASME B16.25. The thickness of the pipe to which the valve has to be welded shall be as indicated in Valve Data Sheet. Valves shall be without transition pups. In case significant difference exists between thickness of welding ends of valve and connecting pipe, the welding ends of valve shall have bevel preparation as per ASME B31.4 or ASME B31.8, as applicable.

4.11 Valves shall be provided with position indicator and stops at the fully open and fully closed positions.

4.12 Valves of size DN 200mm (8") and above shall be equipped with lifting lugs. Tapped holes and eye bolts shall not be used for lifting lugs.

4.13 Valves shall have locking devices to be locked either in full open or full close position when indicated in the Valve Data Sheets. Locking devices shall be permanently attached to the valve operator and shall not interfere with operation of the valve.

4.14 Valves shall be of fire safe design as per BS:6755 (Part-II)/ API 6FA, if indicated in Valve Data Sheet.

4.15 Valves shall be suitable for either buried or above ground installation as indicated in the Valve Data Sheet.

4.16 Valves with stem extension, when indicated in Valve Data Sheet shall have following provisions :

a) Valves provided with stem extension shall have water proof outer casing. Length of stem extension shall be as indicated in the Valve Data Sheet. The length indicated corresponds to the distance between the centreline of the valve opening and the top of the mounting flange for valve operating device (gear operator/ power actuator as applicable).

b) Vent and drain connections shall be terminated adjacent to the valve operator by means of suitable piping anchored to the valve body. Pipe used shall be API 5L Gr. B/ ASTM A106 Gr. B, with Sch. 160. Fittings shall be ASTM A105/ ASTM A 234 Gr. WPB, Socket Welded, ANSI class 6000.

c) Sealant injection lines shall be extended and terminated adjacent to the valve operator in manner as indicated in (b) above.

d) Stem extension and stem housing design shall be such that the complete assembly will form a rigid unit giving a positive drive under all conditions with no possibility of free movements between valve body stem extension or its operator.

e) Outer casing of stem extension shall have 3/8" or ½" NPT plugs at the top and bottom, for draining and filling with oil to prevent internal corrosion.

4.17 **Operating Devices**

a) Valves shall have a power actuator or manual operator as indicated in the Valve Data Sheet. Manual operated valves of size $\leq$ DN 100mm (4") shall be wrench operated and valves of sizes $\geq$ DN 150mm (6") shall be gear operated. Each wrench operated valve shall be supplied with wrench. Valve design shall be such that damage due to malfunctioning of the operator or its controls will only occur in the operator gear train or power cylinder and damaged parts can be replaced without the bonnet being removed.

b) The power actuator shall be in accordance with the specification issued for the purpose and as indicated in the valve and actuator data sheet. Operating time shall be as indicated in valve data sheet. Valve operating time shall correspond to full close to full open / full open to full close under maximum differential pressure corresponding to the valve rating. For actuated valves, the actuator torque shall be atleast 1.25 times the maximum torque required to operate the valve under maximum differential pressure corresponding to the valve class rating.

c) Operating device shall be designed for easy operation of valve under maximum differential pressure corresponding to the valve rating.

d) For manual operation of all valves, the diameter of the hand wheel or the length of operating lever shall be such that under the maximum differential pressure, the total force required to operate the valve does not exceed 350 N. Manufacturer shall also indicate the number of turns of hand wheel (in case of gear operator), required to operate the valve from full open to full close position.

e) Direction of operation of hand wheel or wrench shall be in clock-wise direction while closing the valve. Hand wheels shall not have protruding spokes.

f) Gear operators, if specified, shall have a self locking provision and shall be fully encased in waterproof/ dustproof/ weatherproof/ splashproof enclosure and shall be filled with suitable grease.

4.18 Repair by welding is not permitted for fabricated and forged body valves. However repair by welding as per ASME B16.34 is permitted for cast body valves. Repair shall be carried out before any heat treatment of casting is done. Repair welding procedure qualification shall also include impact test and hardness test when required as per Clause 3.4 and 3.6 of this specification and shall meet the requirements as specified therein.

4.19 The tolerance on internal diameter and out of roundness at the ends for welded ends valves shall be as per connected pipe specification as indicated in the Valve Data Sheet.

4.20 Valve stem shall be capable of withstanding the maximum operating torque required to operate the valve against the maximum differential pressure corresponding to applicable class rating. The combined stress shall not exceed the maximum allowable stresses specified in ASME section VIII, Division-1.

For Power Actuated Valves, the valve stem shall be designed for maximum output torque of the selected power actuator (including gear box, if any) at the valves stem.

5.0 INSPECTION & TESTS

5.1 The Manufacturer shall perform all inspection and tests as per the requirements of this specification and the relevant codes, prior to shipment at his works. Such inspection and tests shall be, but not limited to, the following :

5.1.1 All valves shall be visually inspected.

5.1.2 Dimensional check shall be carried out as per the Purchaser approved drawings.

5.1.3 Chemical composition and mechanical properties shall be checked as per relevant material standards and this specification, for each heat of steel used.

5.1.4 a) Non-destructive examination of individual valve material and component consisting of but not limited to castings, forgings, plates and assembly welds shall be carried out by the Manufacturer.

b) Valves castings shall be radiographically examined at the cover and body portion, seat location, flanged body ends and circumference of ends to be field welded. Procedure and acceptance criteria shall be as per ASME B16.34. The extent of radiography shall be as follows :

ANSI Class 150-	All Sizes	-	Nil
ANSI Class 300-	≤ DN 400mm (16")	-	Nil
	≥ DN 450mm (18")	-	100%
ANSI Class 600- and above	All Sizes	-	100%

All castings shall be wet magnetic particle inspected 100 % of the internal surfaces. Method and acceptance shall comply with ASME B16.34.

c) Valve forgings shall be examined by ultrasonic method. Inspection procedure and acceptance criteria shall be as per Annexure E of ASME B16.34.

5.1.5 Areas which, in Purchaser's Inspector's opinion, cannot be inspected by radiographic methods shall be checked by ultrasonic or magnetic particle methods and acceptance criteria shall be as per ASME Sec-VIII, Division I, Appendix 12 and Appendix 6 respectively.

5.1.6 a) Weld ends of all cast valves shall be 100% radiographically examined and acceptance criteria shall be as per ASME B16.34.

b) After final machining all bevel surfaces shall be inspected by dye penetrant, or wet magnetic particle methods. Any defects longer than 6.35mm shall be rejected and also defects between 6.35mm and 1.59mm that are separated by a distance less than 50 times their greatest length. Weld repair of bevel surface is not permitted. Rejectable defects must be removed.

c) All finished wrought weld ends subject to welding in the field shall be 100% ultrasonically tested for lamination type defects for a distance of 50mm from the end. Laminations shall not be acceptable.

5.1.7 All valves shall be tested in compliance with the requirements of API 6D. Hydrostatic shell testing shall ensure that the whole of the shell is subjected to the test pressure. If necessary, the empty shell shall be pressure tested prior to assembly of the plug. The drain, vent and sealant lines shall be either included in the hydrostatic shell test or tested independently. No leakage is permissible during hydrostatic testing.

5.1.8 A supplementary air seat test as per API 6D shall be carried out for all valves. No leakage is allowed. Test pressure shall be held for at least 15 minutes.

5.1.9 Manufacturer who intends bidding must submit at bid stage, certificate and report for successful fire safe tests for all types of valves in accordance with BS:6755 (Part-II)/ API 6FA, as applicable in Valve Data Sheet.

Failure to comply with the requirement shall be a cause of rejection of the offer.

5.1.10 Valve shall be subjected to Operational Torque Test as per supplementary test requirement of API 6D under hydraulic pressure equal to the maximum differential pressure corresponding to the valve rating. The maximum handwheel force shall not exceed 350 N.

5.1.11 Power actuated valves shall be tested after assembly at the valve Manufacturer's works. Actuator shall be capable to allow minimum five consecutive "opening" and "closing" cycles. To achieve this, the Manufacturer shall provide "closing" and "opening" operations. This test shall be conducted on one valve out of a lot of five valves of the same size, rating and actuator type. In case the test result dose not meet the requirements, retesting/ rejection of the lot shall be as decided by Purchaser's Inspector.

The actuator shall be adjusted to ensure that opening and closing time is within the limits stated in Actuator Data Sheet issued for the purpose.

The hand operator installed on the actuator shall also be checked after the cyclic testing, for satisfactory manual over-ride performance.

5.2 Purchaser reserves the right to perform stagewise inspection and witness tests as indicated in para 5.1 at Manufacturer's works prior to shipment. Manufacturer shall give reasonable access and facilities required for inspection to Purchaser's Inspector.

Purchaser reserves the right to request additional testing at any time to confirm or further investigate a suspected fault. If the suspected fault is confirmed, the cost incurred shall be to Manufacturer's account.

In no case shall any action of Purchaser or his representative relieve the Manufacturer of his responsibility for material, design, quality or operation of valves.

Inspection and tests performed/ witnessed by the Purchaser's Inspector shall in no way relieve the Manufacturer's obligation to perform the required inspection and tests.

6.0 EXTENT OF INSPECTION & TESTING

6.1 Purchaser's Inspector shall perform inspection and witness test on all valves as indicated in the Quality Assurance Plan (QAP) attached with this specification.

6.2 The hydrostatic testing and cyclic opening and closing of the valves with the operator shall be witnessed by Purchaser's Inspector.

7.0 TEST CERTIFICATES

7.1 Manufacturer shall submit the following certificates :

a) Mill test certificates relevant to the chemical analysis and mechanical properties of the materials used for valve construction as per the relevant standards.

b) Test certificates on hydrostatic and pneumatic test complete with records of timing and pressure of each test.

c) Test reports conforming to clause 5.1.9 of this specification, if applicable.

d) Test reports on radiographic and ultrasonic inspection.

e) Test reports on operation of valves conforming to clause 5.1.10 and 5.1.11 of this specification.

f) All other test reports and certificates as required by API 6D and this specification.

The certificates shall be valid only when signed by Purchaser's Inspector. Only those valves which have been certified by Purchaser's Inspector shall be dispatched from Manufacturer's works.

8.0 PAINTING, MARKING & SHIPMENT

8.1 Valve surface shall be thoroughly cleaned, freed from rust and grease and applied with sufficient coats of corrosion resistant paint. Surface preparation shall be carried out by shot blasting to SP 6 in accordance with "Steel Structures Painting Council - Visual Standard - SSPC-VIS-1". For the valves to be installed underground, when indicated in Valve Data Sheet, external surfaces of the buried portion of valves shall be painted with three coats of suitable coal tar epoxy resin with a minimum dry film thickness of 300 microns.

8.2 Manufacturer shall indicate the type of corrosion resistant paint used, in the drawings submitted for approval.

8.3 All valves shall be marked as per API 6D. The units of marking shall be metric except Nominal Diameter which shall be in inches. Marking shall be done by die-stamping on the bonnet or on the housing. However for buried valves the marking shall be done on the above ground portion of the stem housing only.

8.4 Valve ends shall be suitably protected to avoid any damage during transit. All threaded and machined surfaces subject to corrosion shall be well protected by a coat of grease or other suitable material. All valves shall be provided with suitable protectors, for flange faces, securely attached to the valves. Bevel ends shall be protected with metallic bevel protectors.

8.5 All sealant lines and other cavities of the valves shall be filled with sealant before shipment.

8.6 Packaging and shipping instructions shall be as per API 6D.

8.7 Packages shall be marked legibly, with suitable marking ink, the following.

a) Order Number
b) Manufacturer's Name
c) Valve Size and Rating
d) Tag Number
e) Serial Number

9.0 SPARES & ACCESSORIES

9.1 Manufacturer shall recommend and quote separately the spares for valves required for commissioning and two years of normal operation. List of such spares without price shall be indicated alongwith technical bid and separately with price.

9.2 Manufacturer shall recommend and quote unit price separately for the accessories (like wrench, sealant injector, etc.), sealant and special tools required for maintenance of valves.

10.0 DOCUMENTATION

10.1 At the time of bidding, the bidder shall submit the following documents :

a) General arrangement/ assembly drawings showing all features and relative positions & sizes of vents, drains, gear box & other external parts together with overall dimensions.

b) Sectional drawing showing major parts with reference numbers and material specification.

c) Reference list of similar plug valves manufactured and supplied in last five years, indicating all relevant details including project, year, client, location, size rating, service, etc.

d) Torque curves for the power actuated valves alongwith break torque and maximum allowable stem torque. In addition, sizing criteria and torque calculations shall also be submitted for power actuated valves.

e) Descriptive technical catalogues of the Manufacturer.

f) Copy of valid API 6D certificate, wherever applicable.

g) Details of support foot, including dimensions and distance from valve centre line to bottom of support foot.

h) Quality Assurance Plan enclosed with this tender duly signed, stamped and accepted.

IMPORTANT

The drawings to be submitted alongwith the bid shall be in total compliance with the requirement of technical specification and data sheets of the valves with no exception & deviation.

10.2 Within two weeks of placement of order, the manufacturer shall submit six copies of, but not limited to, the following drawings, documents and specifications for approval :

a) Design drawings and relevant calculations for pressure containing parts and other principle parts.

b) Detailed sectional arrangement drawing showing all parts with reference numbers and materials specification.

c) Assembly drawings with overall dimensions & clearances required and showing all features. Drawing shall also indicate the numbers of turns of handwheel (in case of gear operator) required for operating the valve from full open to full close position and the painting scheme.

d) Welding, heat treatment, testing and quality control procedures.

e) Details of corrosion resistant paint to be applied on the valves.

f) Design calculation for pressure containing parts.

Manufacture of valves shall commence only after approval of the above documents. Once approval has been given by Purchaser, any change in design, material and method of manufacture shall be notified to the Purchaser, whose approval in writing for all changes shall be obtained before the valves are manufactured.

10.3 Within 30 days from the approval date, Manufacturer shall submit one reproducible and six copies of the approved drawings, documents and specification as listed in clause 10.2 of this specification.

10.4 Prior to shipment, Manufacturer shall submit one reproducible and six copies of following :-

a) Test certificates as listed in clause 7.0 of this specification.
b) Manual for installation, erection instructions, maintenance and operation instructions, including a list of recommended spares for the valves.

10.5 All documents shall be in English Language.

11.0 GUARANTEE

11.1 Manufacturer shall guarantee that the materials and machining of valves and fittings comply with the requirements in this specification and in the Purchase Order.

11.2 Manufacturer is bound to replace or repair all valve parts which should result defective due to inadequate engineering or to the quality of materials and machining.

11.3 If valve defect or malfunctioning cannot be eliminated, Manufacturer shall replace the valve without delay.

11.4 Any defect occurring during the period of Guarantee shall be attended to by making all necessary modifications and repair of defective parts free of charge to the Purchaser as per the relevant clause of the bid document.

11.5 All expenses shall be to Manufacturer's account.

TECHNICAL NOTES FOR GATE & GLOBE VALVES

TECHNICAL NOTES FOR GATE & GLOBE VALVES

1.0 General

1.1 Valves shall be designed, manufactured, tested, inspected, marked and supplied as per the specifications, applicable design standards & codes and manufacturing standards (latest editions) as specified.

1.2 Material test certificates (Physical property, Chemical composition & Heat treatment report) of the pressure containing parts shall be furnished for the valves supplied. Material test certificates of other parts shall also be furnished for verification during inspection.

1.3 For heavy valves, provision for lifting shall be made by way of lugs, eyebolts, or similar standard devices.

1.4 Unless otherwise stated, all flanged valves shall have end flanges integral with valve body. Weld on flanges are not acceptable. Flange finish shall be serrated finish 250 AARH (250 AARH to 500 AARH) or 125 AARH (125 AARH to 250 AARH) or 63 MRH (32 AARH to 63 AARH) as per valve specification sheet.

1.5 For all weld end valves, with bevel end as per ANSI B 16.25, the bevel contour shall be as follows:

Material	**Wall Thickness**	**Weld Contour**
Carbon Steel (Except Low Temp. Carbon Steel)	Upto 22 mm > 22 mm	Figure 2 Type A Figure 3 Type A
Alloy Steel	Upto 10 mm	Figure 4
Stainless Steel & Low Temp Carbon Steel	> 10 mm & upto 25 mm > 25mm	Figure 5 Type A Figure 6 Type A

1.6 If an overlay weld-deposit is used for the body seat ring, seating surface, the seat ring base material shall be at least equal to the corrosion resistance of the materials of the shell.

1.7 For valve body/ bonnet, forging is acceptable where castings are specified but not vice versa.

1.8 Material of construction of yoke shall be as a minimum equivalent to body/ bonnet material.

1.9 Stem shall be forged or machined from a forged bar. Castings are not permitted except integral stem.

1.10 Stelliting/ hard facing by deposition shall have minimum 1.6mm thickness. Renewable seat rings shall be seal welded.

1.11 Face to face dimension of flanged valves shall conform to ANSI B 16.10 to the extent covered. For valves not covered in the ANSI specification, Contractor shall furnish certified dimensional drawings.

1.12 Flange dimensions of steel, alloy steel and stainless steel flanged valves shall conform to ANSI B 16.5 for sizes up to 24" and API 605 for size 26'' and above.

1.13 Flange dimensions for cast iron flanged valves shall conform to ANSI B 16.1 for size up to 24" class 125 and API 605 with flat face for sizes greater than 24".

1.14 Unless otherwise mentioned, various valves should conform to following standards / codes.

SW gate valves (1 1/2'' and below)	:	API 602
SW Globe valves (1 1/2" and below)	:	BS 5352
Flanged gate valves		API 600 & API-6D
Flanged Globe valves	:	BS 1873

1.15 Wherever stellite is specified, it means facing of seat and disc are welded by Cr-Co-W alloy. Stellite facing shall maintain minimum hardness of 375 BHN at high temperature.

1.16 All weld end valves shall have bevel ends as per ANSI B 16.25.

1.17 If an overlay weld deposit is used for the body seat ring or seating surface, the seat ring base material shall be at least equal to corrosion resistance of the material of the shell.

1.18 <u>By Pass</u>

- Unless otherwise noted, by-pass requirement for gate valves shall be under -

150 Class	:	on sizes 26" and above
300 Class	:	on sizes 16" and above
600 Class	:	on sizes 6" and above
900 Class	:	on sizes 4" and above
1500 Class	:	on sizes 4' and above
2500 Class	:	on sizes 3" and above

- By-pass valve shall be a globe valve.

- Contractor shall supply the by-pass valve duly tested and fitted to the main valve. By-pass attachment to the main valve body shall not be screwed. All fillet welds for by-pass installation shall be 100% examined by DP / MP test.

1.19 Spiral wound bonnet gasket is to be provided with inner / outer ring except when encapsulated gaskets type body bonnet joints are employed. Outer ring may be avoided in case of non-circular spiral wound gasket used in 150# valve provided the outermost layer of spiral touches the bolts ascertaining the centering.

1.20 <u>Pressure Test</u>

- Valves covered under API codes shall be tested as per API 598 unless otherwise specified in the applicable valve code.

- Valves covered under BS code shall be tested as per BS 6755 unless otherwise specified in the applicable valve codes.

1.21 For all austenitic stainless valves, inter-granular corrosion test shall have to be

conducted as per following: -

- ASTM A 262 Practice 'E' with acceptance criteria of "60 mils / year (max.)".

OR

- ASTM A 262 practice 'E' with acceptance criteria of "No cracks as observed from 20X magnification U & Microscopic structure to be observed from 250X magnification".

1.22 When specifically asked for high temperature application of some grades of austenitic stainless steel (like SS 309, 310, 316, 316H etc.) ASTM A 262 practice 'C' with acceptance criteria "15 MILS/YEAR" shall have to be conducted. When testing is conducted as per practice 'E' photograph of microscopic structure shall be submitted for record.

1.23 For the IGC test as described in 1.16.1 & 1.16.2 two sets of samples shall be drawn from each solution treatment lot, one set corresponding to highest carbon content and other set corresponding to the highest rating/ thickness.

2.0 OPERATION

2.1 Valves shall be supplied with gear operations based on the following requirements:

Valve Types	Class	Size Requiring Gear Operation
Gate & Diaphragm Valves	150	14" and larger
	300	14" and larger
	600	12" and larger
	900	6" and larger
	1500	3" and larger
	2500	3" and larger
Globe Valves	900	6" and larger
	1500	3" and larger
	2500	3" and larger

2.2 Gear operator shall be as under with position indicators for open / close positions, with limit stops.

For Gate / Globe / Diaphragm Valves	Totally enclosed bevel gear in grease case with grease nipples/ CHECK

2.3 Gear operators shall be so designed to operate effectively with the differential pressure across the closed valve equal to the cold non-shock pressure rating.

2.4 Hand wheel diameter shall not exceed 750 mm and effort to operate shall not exceed 35 kg at hand wheel periphery. In case these limits cannot be satisfied for any valve, a gear operation shall be provided.

3.0 INSPECTION AND TESTING

3.1 All the mandatory shop tests and inspection required by the respective data sheet and applicable standards & codes etc. shall be carried out.

3.2 The extent of inspection by shall be as under. However the exact extent with hold

points shall be decided during review of the inspection plan to be submitted to Company as part of the post-order documentation.

3.3 Valves under NACE should follow the requirements of MR-01-75

FORGED VALVES

- Visual and dimensional inspection
- Review of material test certificates
- Any mandatory or supplementary test
- Hydrostatic test of all valves
- Strip check on 1% of total ordered quantity of valves at random to verify compliance with specification requirements.

CAST STEEL VALVES

- Visual and dimensional inspection
- Review of material test certificates
- Review of radiographs / radiographic reports and reports of any other NDT tests, wherever applicable as per data sheets
- Any mandatory or supplementary tests
- Hydrostatic test 100% for body
- Strip check on 1% of total ordered quantity of valves at random to verify compliance with specification requirements.

3.4 For motor /actuator operated valves, functional / operational checks as per the requirements of the specifications shall be made on each valve.

4.0 RADIOGRAPHY OF CAST VALVES

4.1 When specifically not mentioned in individual data sheets, valves castings shall undergo radiographic examination as specified hereunder:

MATERIAL	RATING	SIZE RANGE	RADIOGRAPHY
All	150#	24” and below	Nil
	150#	26” and above	100%
	300#	16” and below	Nil
	300#	18” and above	100%
	600# and above	All sizes	100%

4.2 Radiography procedure areas of casting to be radiographed shall be as per ANSI B 16.34 and acceptance criteria shall be as per ANSI B 16.34 Annexure — B. However for areas of casting to be radiographed for types of valve not covered in ANSI B 16.34, Contractor shall enclose details of areas to be radiographed in line with ANSI B 16.34.

5.0 IBR VALVES

5.1 All valves described as “IBR Valves” shall be in accordance with the latest IBR (Indian Boiler Regulations) as well as the other requirements specified in the specification.

5.2 For BW / SW end carbon steel valves under “IBR”, the chemical composition shall conform to the following:

Carbon (Max.) : 0.25%

Others (S, B, Mn) : As per IBR

Above composition is not applicable for non-IBR valves.

5.3 For all "IBR Valves", test certificate in form III-C shall be furnished duly signed by IBR inspection authority or an IBR approved representative.

5.4 All valves shall be painted red.

6.0 **MARKING**

6.1 Valves markings, symbols, abbreviations, etc. shall be in accordance with MSS-SP-25 or the standard referred to in the specifications as applicable Manufacturer's name, valve size and rating, material designation, nominal size, direction of flow (if any) etc. shall be integral on the body.

6.2 Each valve shall have a corrosion resistant tag giving size and valve tag/code no. securely attached on the valve body.

6.3 Paint or ink used for marking shall not contain any harmful metal or metal salts such as zinc, lead or copper which may result in corrosive attack on heating.

6.4 Carbon steel valves shall be painted with two coats of red oxide zinc chromate primer.

6.5 All alloy steel high temp valves shall be painted with heat resistant silicone paint suitable for intended temperature.

7.0 **DESPATCH**

7.1 Valves shall be dry, clean and free from moisture, dirt and loose foreign material of any kind.

7.2 Valves shall be protected from rust, corrosion and any mechanical damage during transportation, shipment, and storage.

7.3 Rust preventative applied on machined surfaces to be welded shall be easily removable with a petroleum solvent or shall not be harmful to welding.

7.4 Each end of valves shall be protected as follows:

Flange Face	:	Wood, plastic or metal cover
Beveled End	:	Wood, plastic or metal cover
SW / Screwed End	:	Plastics cap

7.5 End protectors to be used on flange faces shall be attached by at least three bolts or wires through bolt holes and shall not be smaller than the outside diameter of the flange. Plastic caps for SW / Screwed and valves shall be press fit type.

7.6 End protectors to be used on beveled ends shall be securely attached.

MSS-SP-25 or the standard referred to in the specifications as applicable Manufacturer's name, valve size and rating, material designation, nominal size, direction of flow (if any) etc. shall be integral on the body.

6.2 Each valve shall have a corrosion resistant tag giving size and valve tag/code no. securely attached on the valve body.

6.3 Paint or ink used for marking shall not contain any harmful metal or metal salts such as zinc, lead or copper which may result in corrosive attack on heating.

6.4 Carbon steel valves shall be painted with two coats of red oxide zinc chromate primer.

6.5 All alloy steel high temp valves shall be painted with heat resistant silicone paint suitable for intended temperature.

7.0 **DESPATCH**

7.1 Valves shall be dry, clean and free from moisture, dirt and loose foreign material of any kind.

7.2 Valves shall be protected from rust, corrosion and any mechanical damage during transportation, shipment, and storage.

7.3 Rust preventative applied on machined surfaces to be welded shall be easily removable with a petroleum solvent or shall not be harmful to welding.

7.4 Each end of valves shall be protected as follows:

Flange Face	:	Wood, plastic or metal cover
Beveled End	:	Wood, plastic or metal cover
SW / Screwed End	:	Plastics cap

7.5 End protectors to be used on flange faces shall be attached by at least three bolts or wires through bolt holes and shall not be smaller than the outside diameter of the flange. Plastic caps for SW / Screwed and valves shall be press fit type.

7.6 End protectors to be used on beveled ends shall be securely attached.

PROCESS & PIPING DESIGN SECTION
MECON LIMITED
DELHI – 110 092

TECHNICAL SPECIFICATION
FOR
CHECK VALVES

SPECIFICATION NO. : MEC/TS/05/62/004, Rev-2

CONTENTS

Sl.No.	Description	Page No.
1.0	SCOPE	2
2.0	REFERENCE DOCUMENTS	2
3.0	MATERIALS	2
4.0	DESIGN AND CONSTRUCTION	3
5.0	INSPECTION AND TESTS	4
6.0	TEST CERTIFICATES	5
7.0	PAINTING, MARKING AND SHIPMENT	6
8.0	SPARES AND ACCESSORIES	6
9.0	DOCUMENTATION	6
10.0	GUARANTEE	7

1.0 **SCOPE**

This specification covers the minimum requirements for design, manufacture and supply of carbon steel check valves of size DN 50mm (2") and above and ANSI class 150, 300 and 600 , for use in onshore pipeline systems handling non-sour hydrocarbons in liquid phase or gaseous phase including Liquefied Petroleum Gas (LPG).

2.0 **REFERENCE DOCUMENTS**

2.1 All valves shall be manufactured and supplied in accordance with the latest edition of American Petroleum Institute (API) Specification 6D or 594 or British Standard BS:1868, with additions and modifications as indicated in the following sections of this specification.

For Contractual purpose, the edition in force at the time of floating of the enquiry shall be termed as "latest edition".

3.0 **MATERIALS**

3.1 Material for major components of the valves shall be as indicated in Valve Data Sheet. Other components shall be as per Manufacturer's standards which will be subject to approval by Purchaser.

3.2 Carbon steel used for the manufacture of valves shall be fully killed.

3.3 The Carbon Equivalent (CE) of valve end connections which are subject to further field welding by Purchaser, shall not exceed 0.45% (as calculated by the following formula) on check analysis for each heat of steel used :

$$CE = C + \frac{Mn}{6} + \frac{Cr + Mo + V}{5} + \frac{Ni + Cu}{15}$$

3.4 Charpy V-Notch test on each heat of base material shall be conducted as per API 6D, clause 7.5, for all pressure containing parts such as body, end flanges and welding ends as well as bolting material for pressure containing parts. Unless specified otherwise, the Charpy impact test shall be conducted at 0°C. The Charpy impact test specimen shall be taken in the direction of principal grain flow and notched perpendicular to the original surface of plate or forging.

The minimum average absorbed energy per set of three specimens shall be 27 J with an individual minimum per specimen of 22 J. No specimen shall exhibit less than 80 percent shear area.

3.5 All process – wetted parts, metallic and non-metallic, shall be suitable for the fluids and service specified by the Purchaser.

4.0 DESIGN AND CONSTRUCTION

4.1 Following types of check valves, meeting the requirements of applicable standards (refer clause 2.1 of this specification) are acceptable :

a) Swing check valve
b) Dual plate check valve
c) Axial flow (Nozzle) check valve

Valve design shall be suitable for the service conditions indicated in Valve Data Sheet. Corrosion allowance indicated in Valve Data Sheet shall be considered in valve design.

4.2 In case of swing check valves, the disc hinge shall be mounted on the valve body and shall not be attached to the valve body cover. Valve body cover joint shall be of bolted design. Screwed covers shall not be used.

4.3 Valves shall be provided with non-renewable integral type seats as indicated in Valve Data Sheet. Non-renewable seats shall be of a design which does not required renewal over the design life of the valve.

4.4 Valves shall be provided with drain connection as per the Manufacturer's standard. Drain tapping shall be provided in a position suitable to completely drain the valve with valve in horizontal position.

4.5 Valve ends shall be either flanged or butt welded or one end flanged and one end butt welded as indicated in Valve Data Sheet. Flanged end shall have dimensions as per ASME B16.5 for sizes upto DN 400mm (16"). Flanges of the flanged end cast body valves shall be integrally cast with the body of the valve.

4.6 Butt weld end preparation shall be as per ANSI B16.25. The thickness of the pipe to which the valve has to be welded shall be as indicated in Valve Data Sheet. Valves shall be without transition pups. In case difference exists between thickness of valve neck end and connecting pipe, the bevel end of valve shall be prepared as per ANSI B31.8 or ANSI B31.4, as applicable.

4.7 Valves of size DN 200mm (8") and above shall be equipped with lifting lugs. Tapped holes and eye bolts shall not be used for lifting lugs.

4.8 An arrow indicating the direction of flow shall be embossed or cast on the body of all valves.

4.9 All welds shall be made by welders and welding procedures qualified in accordance with the provisions of ASME Section IX. The welding and repair welding procedure qualification shall include impact test and shall meet the requirements of clause 3.4 of this specification.

4.10 Repair by welding is permitted for cast body valves subject to written approval by Purchaser and shall be carried out as per ANSI B16.34. Repair shall be carried out before any heat treatment of casting is done.

5.0 INSPECTION AND TESTS

5.1 The Manufacturer shall perform all inspection and tests as per the requirements of this specification and the relevant codes, prior to shipment at his works. Such inspection and tests shall be, but not limited to, the following :

5.1.1 All valves shall be visually inspected.

5.1.2 Dimensional check on all valves shall be carried out as per the Purchaser approved drawings.

5.1.3 Chemical compositions and mechanical properties shall be checked as per relevant material standards and this specification, for each heat of steel used.

5.1.4 a) Where applicable, the body castings of valves shall be radiographically examined on 100% of the surface of critical areas as per ANSI B16.34. Procedure and acceptance criteria shall be as per ANSI B16.34.

b) Where applicable, valve body made by forging and plate components shall be ultrasonically examined in accordance with procedure and acceptance standard of Annexure E of ANSI B16.34.

c) The extent of radiography/ ultrasonic examination shall be as follows :

ANSI	class 150	-	All sizes	-	Nil
ANSI	class 300	-	$\leq$ DN 400mm (16")	-	Nil
			$\geq$ DN 450mm (18")	-	100%
ANSI	class 600	-	All sizes	-	100%

5.1.5 All valves shall be tested in compliance with the requirements of applicable standard (refer clause 2.0).

5.2 Purchaser reserves the right to perform stage-wise inspection and witness tests as indicated in clause 5.1 above at Manufacturer's works prior to shipment. Manufacturer shall give reasonable access and facilities required for inspection to the Purchaser's Inspector.

Purchaser reserves the right to require additional testing at any time to confirm or further investigate a suspected fault. The cost incurred shall be to Manufacturer's account.

In no case shall any action of Purchaser or its Inspector relieve the Manufacturer of his responsibility for material, design, quality or operation of valves.

Inspection and tests performed/ witnessed by the Purchaser's Inspector shall in no way relieve the Manufacturer's obligation to perform the required inspection and tests.

6.0 TEST CERTIFICATES

Manufacturer shall submit the following certificates :

a) Mill test certificates relevant to the chemical analysis and mechanical properties of the materials used for the valve construction as per the relevant standards.

b) Hydrostatic test certificates complete with records of timing and pressure of each test.

c) Test reports of radiograph and ultrasonic inspection, as applicable.

d) All other test reports and certificates as required by applicable standard and this specification.

The certificates shall be valid only when signed by Purchaser's Inspector. Only those valves which have been certified by Purchaser's Inspector shall be despatched from Manufacturer's works.

7.0 PAINTING, MARKING AND SHIPMENT

7.1 Valve surface shall be thoroughly cleaned, freed from rust and grease and applied with sufficient coats of corrosion resistant paint. Surface preparation shall be carried out by shot blasting to SP-6 in accordance with "Steel Structures Painting Council – Visual Standard SSPC-VIS-1".

7.2 All valves shall be marked as per applicable standard. The units of marking shall be metric except nominal diameter which shall be in inches.

7.3 Valve ends shall be suitably protected to avoid any damage during transit. All threaded and machined surfaces subject to corrosion shall be well protected by a coat of grease or other suitable material. All valves shall be provided with suitable protectors for flange faces, securely attached to the valves.

7.4 Packaging and shipping instructions shall be as per applicable standard.

7.5 On packages, the following shall be marked legibly with suitable marking ink:

a) Order Number

b) Manufacturer's Name

c) Valve Size and Rating

d) Tag Number

8.0 SPARES AND ACCESSORIES

8.1 Manufacturer shall recommend and quote separately the spares for valves required for commissioning and two years of normal operation.

9.0 DOCUMENTATION

9.1 At the time of bidding, Manufacturer shall submit the following documents :

a) General arrangement drawings showing all features together with overall dimensions and actual valve bore size.

b) Sectional drawing showing major parts with reference numbers and material specification.

c) Details of corrosion resistant paint proposed to be applied.

d) Reference list of similar supplies of check valves, including project, year, client, location, size, rating, services, etc. shall be furnished by the Manufacturer for the last three years. **(The valves shall be proven for service indicated in Valve Data Sheet).**

9.2 Within three weeks of placement of order, the Manufacturer shall submit four copies of, but not limited to, the following drawings, documents and specifications for Purchaser's approval.

a) Detailed sectional drawings showing all parts with reference numbers and material specification.

b) Assembly drawings indicating overall dimensions, features and painting scheme.

Once the approval has been given by Purchaser, any changes in design, material and method of manufacture shall be notified to Purchaser whose approval in writing of all changes shall be obtained before the valve is manufactured.

9.3 Within 30 days from the approval date, Manufacturer shall submit to Purchaser one reproducible and six copies of all approved drawings, documents and specifications as listed in clause 9.2 above.

9.4 Prior to shipment, Manufacturer shall submit to Purchaser one reproducible and six copies of the following :

a) Test certificates as listed in clause 6.0 of this specification.

b) Manual for installation, erection, maintenance and operation instructions, including a list of recommended spares for the valves.

9.5 All documents shall be in English language.

10.0 **GUARANTEE**

10.1 Manufacturer shall guarantee that the materials and machining of valves and fittings comply with the requirements in this specification and in the Purchase Order.

10.2 Manufacturer is bound to replace or repair all valve parts which should result defective due to inadequate engineering or to the quality of materials and machining.

10.3 If valve defect or malfunctioning cannot be eliminated, Manufacturer shall replace the valve without delay,

10.4 Any defect occurring during the period of Guarantee shall be attended to by making all necessary modifications and repair of defective parts free of charge to the Purchaser as per the relevant clause of the bid document.

10.5 All expenses shall be to Manufacturer's account.

STANDARD TECHNICAL SPECIFICATION FOR PACKING, TRANSPORTATION AND HANDLING OF VALVES

SPECIFICATION NO.: MEC/TS/05/21/061

(OIL & GAS SBU)
MECON LIMITED
DELHI 110 092

PREPARED BY:	CHECKED BY:	APPROVED BY:	ISSUE DATE :
(ASHISH MATHUR) SDE	(HARSH KUMAR) MGR	(A. K. GUPTA) DGM	11.09.2018

AMENDMENT STATUS

Sl. No.	Clause / Paragraph / Annexure / Exhibit / Drawing Amended	Page No.	Rev.	Date	BY		Verified	
					Name	Sig.	Name	Sig.

TABLE OF CONTENTS

1.0 SCOPE 4

2.0 PACKING 4

3.0 HANDLING..... 4

4.0 TRANSPORTATION..... 5

1.0 SCOPE

This specification covers the minimum requirements for Packing, Handling & transportation of valves and actuators. Though this specification covers the minimum requirement for packing, handling and transportation of valves, it is to be noted that any defect/ damage arising out of improper packing, handling & transportation shall be the responsibility of vendor. The delay due to rectification of such faults shall be to vendor's account. The date of delivery of material at site shall be considered as the day on which last such rectified material is delivered/ rectified at designated store.

2.0 PACKING

2.1 All valves shall be completely drained of test fluid and thoroughly dried after hydrotesting. The machined surfaces shall be coated with a light film of high viscosity rust inhibiting oil which will not become fluid and run off at temperatures below 80°C.

2.2 Flanged valves NPS 6" and smaller in Class 150 and Class 300 shall be fitted with UV resistant plastic covers. For other sizes, valve end flanges shall be fitted with plywood covers. The cover diameter shall be the same as the outside diameter of the flange and shall be at least 10 mm thick for valves up to NPS 24" and 12 mm thick for valves NPS 26" and larger. The cover shall be attached by machine bolts with a nut and washer fitted on the inside of the flange. There shall be minimum four (4) bolts on valves up to NPS 24" nominal size and eight (8) bolts on valves NPS 26 inch and larger. The bolts diameter shall not be less than ¼ the size of the flange bolt hole.

2.3 In addition to the above, all flange facings (ring joint, raised and flat) shall be covered with NBR (based) rubber Self-Adhesive protection (see fig below) that meets the following:

- Oil, ozone and weather resistant
- Minimum thickness of 1.5 mm
- Withstand temperatures up to 75°C
- Non deforming, loosening or detaching
- Proof against sand blasting
- No glue residue
- Chloride free

2.4 Buttweld end valves shall be blanked on each end by high impact plastic bevel protectors, so that bevels are protected from possible mechanical damage during transportation.

2.5 The ends of threaded and socket weld end valves shall be protected with tight fitting plastic caps.

2.6 Packing shall be strong and sturdy such that it can withstand loading/unloading, pushing and crane lifting etc. All packaging shall be done in such a manner as to reduce volume and weight as much as possible without jeopardizing the safety of the material. All packing materials shall be new.

2.7 Stacking of multiple valves in single box is permitted upto 4" NB. However, in such case suitable partitions are to be made inside packing box.

2.8 Where height limitations restrict transportation of valve with actuator in assembled condition, actuator should be dismantled after successful testing at shop. However, the same need to be proposed by valve manufacturer during inspection of said valves and take the approval for Client/ PMC.

2.9 When valve, extended stem and actuators are transported in dismantled condition, the same shall be reassembled after fitment of valve at site. Valve vendor to deploy their representative within 3 days once the intimation is sent from site. Any delay beyond 3 days shall be to supplier's account.

2.10 Valve manufacturers to note that the safe transportation of assembled valve with actuator is in their scope of work. It is therefore required that the valve manufacturer should order actuator meeting the packing guidelines given in this specification. No claim shall be entertained on account of actuator manufacturer's non compliance of requirements specified in this specification, and the valve with actuator shall leave manufacturer's workshop after meeting the terms given in this specification.

2.11 Valves shall not be packed in poly wrap irrespective of the increase in shipping/ transport volume. Box of wood/ ply board etc. shall only be used to pack the valves with/ without actuator irrespective of the size/ rating of the valve.

2.12 The packing shall have suitable lifting arrangement to enable the lifting of valve with the packing. Suitable provisions/ supports shall be provided from support foot/ lifting lugs to enable to lift the valve with packing.

2.13 Where it is required to transport valve and actuator separately, above clauses shall be individually applicable for valve and actuator.

2.14 Assembled Valves shall be properly secured inside packing in order to avoid any contact with packing material during transport.

2.15 For extended stem valves, it is permissible to dismantle stem extension and actuator and as such the valve may be transported in three parts, each part complying individually the requirements of this specification.

2.16 Actuators shall be packed in wooden box with proper cushioning of damage prone parts like sockets, tubing, panel boxes etc.

2.17 Actuator cylinders shall be mounted on base with the help of metallic U-clamps/ welding on reinforcement plate. Metallic U-clamps to be used with double bolts on either side of U clamp.

2.18 Actuator components layout shall be such that to minimize packing volume. Back-up tank shall be put in horizontal position only, wherever feasible.

2.19 The manufacturer shall exhibit the packing meeting to the requirement of this specification during inspection and take clearance.

3.0 HANDLING

3.1 Manufacturer to ensure that during lifting hooks for assembly are attached to body/ end piece casting/ forging only and not on the pup piece. Any pup piece having hook attachment mark may be rejected.

3.2 Assmebled valves, at all times, shall be lifted through lifting lugs only and not from the pup pieces.

3.3 Support foot shall be provided on body only in bolted design. In no case, the support foot shall be fastened in body bolting.

3.4 Lifting Lugs shall be provided on body/ tail piece in bolted design. In no case, the lifting lugs shall be fastened in body bolting.

3.5 Valve vendor to work in close coordination with actuator vendor to ensure that the sling put in lifting lug of valve do not interfere with the actuator/ tubing during lifting at site. Any breakage during site lifting due to fouling of tubing/

actuator components during site lifting shall be in supplier' account.

3.6 Extended Stem valves shall have placement of lifting lugs to ensure the lifting of valve in stem vertical condition only. Under no condition the valve is to be lifted in Stem horizontal/ inclined position.

4.0 TRANSPORTATION

4.1 If the valve and actuator in assembled condition can be accommodated on low bed trailer, low bed trailer shall only be used for inland transportation. Dismantling of valve and actuator shall not be permitted under such case.

4.2 Valve shall be secured on trailer/ truck bed with ropes suitably attached with valve boxes. Type of rope selection shall depend upon weight of valve.

4.3 Tack welds on trailer/ truck bed shall not be used as a fastening method.

4.4 Bolting may be used to securely fasten the valve base on trailer if the provision is available. No. and diameter of bolts shall be suitably chosen as per weight of valve to ensure that bolts do not shear off during transportation.

4.5 For large size valves, Loading shall be done preferably by hanging the valve in position and moving the vehicle to valve sitting position.

4.6 Since unloading of valves is under valve manufacturer's scope, it is to be ensured that valve manufacturer's representative shall be available at designated store to facilitate the same. Valve manufacturer has to keep the track of vehicle movement accordingly. If due to project exigency/ time constraint the unloading has to be done during manufacturer's representative's absence, any damage during such unloading shall be attributable to manufacturer only.

SPECIFICATION

FOR

GAS OVER OIL ACTUATOR

T.S. NO.: MEC/ TS / 05 / E5 / 002

TABLE OF CONTENTS

1.0 SCOPE 3
2.0 DEFINITIONS 3
3.0 REFERENCE DOCUMENTS 4
4.0 ACTUATOR SIZING 6
5.0 MATERIAL 7
6.0 DESIGN & CONSTRUCTION 7
7.0 INSPECTION AND TESTS 14
8.0 SHIPPING 16
9.0 TEST CERTIFICATES/REPORTS 17
10.0 PAINTING AND MARKING 17
11.0 SPARES AND SPECIAL TOOLS 18
12.0 DOCUMENTATION 18
13.0 GUARANTEE & WARRANTY: 20

1.0 SCOPE

1.1 This specification, together with applicable data sheets covers, the minimum requirements for design, manufacture, inspection and testing of quarter turn gas over oil actuators (GOV) complete with accessories suitable for operation of ball valves in pipeline/piping systems handling hydrocarbons in gaseous phase.

1.2 This specification indicates the minimum supply requirements and does not relieve the Vendor from his responsibilities concerning the design and the safe operation of the supplied equipment.

1.3 The valve manufacturer shall also be responsible for proper operation of the actuator that shall develop a torque or a thrust sufficient to conveniently open and close the valve always within the limits established by the resistance of the mechanical elements of the valve itself.

1.4 Valve and actuator shall be supplied as a single assembly complete in all respect and ready for installation at site.

1.5 This specification shall be read in conjunction with Owner's data sheets and specifications for pipeline ball valves.

1.6 The CONTRACTOR/ Manufacturer is free to and solely responsible to conduct any other tests which he thinks require and deemed necessary to meet the guarantee and the integrity of the pipeline.

2.0 DEFINITIONS

Owner	:	As per tender
Consultant / Engineering Consultant (EC)	:	MECON LIMITED
Contractor/Vendor	:	Any supplier for goods and services or supplier/ manufacturer of equipment or construction contractor appointed/ nominated by Owner and that is not a sub-contractor of Consultant for the Services it provides.
Party	:	Any one of the Owner or the Consultant
Parties	:	Both Owner and the Consultant

Third Party	:	Any other person or entity as the context requires
TPIA	:	Third Party Inspection Agency for Site Construction, manufacturing / production of material required till the project completion for ensuring the quality at site and at manufacturer's premise appointed by the Vendor
Services	:	The services to be performed by the Vendor for and in relation to the Facility and includes the detailed works mentioned in this tender
BEP	:	Basic Engineering Package
RFP	:	Request for Proposal
FEED	:	Front End Engineering & Design
Associated Facilities	:	Dispatch, Receipt Stations & Sectionalizing valve stations etc.
Site	:	The land, location, RoU and/or includes any other place as may be designated by the Owner in connection with the Facility where the Services are to be provided/ performed by the Vendor
Site Office	:	NA

3.0 REFERENCE DOCUMENTS

i. Reference has been made in this specification to the latest edition of the following Codes, Standards and Specifications.

- PNGRB-T4S [Latest Edition]
- PESO – Petroleum Explosive Safety Organization
- API 6DX - Standard for Actuators and Mounting Kits for Valves, 2nd Edition
- ISO 5211 - Industrial valves -- Part-turn actuator attachments
- ISO 12490:2011 - Petroleum and natural gas industries - Mechanical integrity and sizing of actuators and mounting kits for pipeline valves
- ISO 14313:2007 - Petroleum and natural gas industries - Pipeline transportation systems - Pipeline valves
- API 6D – Specification for Line Pipes

- ASME B 31.3 - Process Piping
- ASME B31.8 - Gas Transmission & Distribution Piping Systems.
- ASME B 16.5 - Steel Pipe Flanges and Flanged Fittings
- ASME B16.47 - Large dia. Steel Flanges: NPS 26 through NPS 60
- MSS SP 44 - Steel pipeline flanges
- ASME Sec VIII - Boiler and Pressure Vessels Code
- ANSI B 1.20.1 - Pipe Threads, General Purpose
- NEC - National Electric Code
- IEC - International Electro Technical Commission & Sec IX
- MSS-SP-101 - Part-Turn Valve Actuator Attachment - Flange and Driving Component Dimensions and Performance Characteristics
- SSPC-VIS-1 - Steel Structures Painting Council Visual Standard
- IEC-60079 - Electrical apparatus for explosive gas atmosphere
- IEC-60529 - Degree of protection provided by enclosure

ii. In case of any conflict between various requirements of specifications and code requirements, the most stringent requirement shall be followed and the decision of Owner in the resolution of the conflict shall be final and shall be implemented by contractor without any time and cost implication.

iii. In the event of an inconsistency, conflict or discrepancy between any of the Standards, Specifications and Statutory requirements, the most stringent and safest requirement applicable to the project will prevail to the extent of the inconsistency, conflict or discrepancy. Any inconsistencies, critical to the design, shall be brought to the attention of the EPMC/ CONSULTANT / OWNER for resolution. The OWNER's clarification shall be final.

iv. The manufacturer shall supply a certificate of conformance to this standard. The certificate shall identify the actuator type, model, and serial number; any additional requirement specified by the manufacturer or purchaser; and a certification statement that the actuator and mounting kit are in full conformance with this product standard edition and all addenda.

v. The manufacturer shall provide procedures for the safe removal of the spring/spring module.

vi. Welding in compliance with API 6DX Clause 9.

vii. Quality Control in compliance with API 6DX Clause 10

viii. Final acceptance testing in compliance with API 6DX Clause 11

ix. Surface Protection in compliance with API 6DX Clause 12

x. Preparation for shipment in compliance with API 6DX Clause 14

xi. Actuator stops shall control position even if valve has integral stops.

xii. Any other requirement which are specified at latest API 6DX with all issued addendum(s) but not covered in this document, shall be complied by the vendor in totality

4.0 ACTUATOR SIZING

4.1. For sizing the actuator, Valve manufacturer shall furnish to the actuator manufacturer the following information:

I. The maximum breakaway torque or thrust required at the valve stem with manual/remote operation to open and close a valve at the shut off pressure in the line. The actuator shall be sized at 25-27 kg/cm^2(g) gas pressure and meeting the safety factor of 1.25 as required by the valve operation at the maximum differential pressure in the line corresponding to valve class rating. The maximum differential pressure shall be same as the design pressure.

II. The temperature correction factor.

III. The pressure correction factor.

IV. As a result of points (I) to (III) the minimum required torque or thrust output of the actuator.

4.2. The maximum time required to open and close a ball valve shall be as indicated in the data sheet.

4.3. Actuator back up tank sizing calculation to be done at 25 kg/cm^2 [charging pressure] and to be designed considering 2 Open & 2 Close cycle

4.4. The opening/closing timings for gas over oil-actuated valves shall be 3 Seconds per inch dia of the valve at the actuator sizing pressure

4.5. Actuator should work considering operating pressure 25 kg/cm^2 to 85 kg/cm^2 and operating temperature range between 0 deg C to 50 deg C without any functional and operational lags/deficits. Components/MOC shall be selected in accordance to this. Actuator design pressure shall be 98 barg and design temp shall be -20 to 60 Deg C.

4.6. Actuator shall be equipped with suitable pressure regulator/Torque limiting device in such a way that it should work efficiently and smoothly with the given operating pressure and

without any gas venting or limitations.

4.7. Actuator manufacturer shall provide the complete model number, OEM part nos, decoding sheet with the relevant catalogue, manual etc. for actuators, limit switches, DPSH switches and solenoid valves along with each component of OEM.

4.8. Complete details of Gas & Oil (Hydraulic) circuit with complete sequencing of port from open to close and close to open position shall be furnished in the offer for review.

4.9. Manufacturer shall furnish the detailed calculation for actuator sizing after placement of order. The calculation so furnished by manufacturer shall satisfy the sizing criteria as per above clauses. Manufacturer shall agree to upgrade the actuators offered to meet the sizing criteria without any price and schedule impact. Actuator sizing shall be carried out in accordance to latest API 6DX. In case of any conflicts between this specification, data sheet, QAP and API 6DX requirements, more stringent to be followed or in consultation with owner/PMC

5.0 MATERIAL

5.1. Actuators shall be supplied with SS 316 stainless steel trim. Materials of all parts and seals shall be compatible with the operating hydraulic fluid (Oil). All materials shall be suitable for the ambient conditions and operating conditions as indicated in the Actuator Data Sheets.

5.2. All tubing, fittings & instrument valve shall be of SS304/316 make. Fittings and Tubing material shall be of Swagelok-Parker and Sandvik make only.

5.3. Actuator and all accessories shall be suitable to the both Dry & Wet Natural Gas properties along with saline and corrosive environment. Pressure regulator used in GOV shall be Swagelok/Parker make only. Hand pump MOC shall be SS 304/316 only.

6.0 DESIGN & CONSTRUCTION

6.1. Gas over Oil Actuator (GOOA) shall be of rotary vane type mechanism or double acting scotch yoke type mechanism with pistons and shall maintain the selected valve position fully open or closed with pressure equalized. If there is no gas pressure available to actuators, it shall be possible to actuate the gas over oil actuators by means of hydraulic oil/gas or other similar source. The actuator manufacturer shall furnish the capacity & set pressure of gas/oil tanks for at least two cycles (Two for open & Two for close).

6.2. The gas to be used for actuation purpose shall be sourced from main pipeline. Vendor shall indicate the minimum pressures required for gas pressure. Actuators shall be suitable for gas operating conditions & ambient temperature as specified in data sheet(s). Presence of methanol in the gas shall not affect the service of actuators.

6.3. All materials in contact with natural gas shall be suitable for gas composition attached with this specification. Project Specific Gas Composition will be provided by Owner to the successful Bidder post award which is to be followed while designing actuator.

6.4. Actuator body shall be designed to ASME B31.3 and all body joints shall be in accordance with ASME Section VIII, Division 1.

6.5. Actuator shall be suitable for direct mounting on the ball valves without changing the standard top works of the valve and shall have the capability to be mounted or removed from the valve when the valve is in service. Insulating gasket shall be provided on valve body at stem location & actuator connection.

6.6. All pressure and load carrying components in the actuator shall be designed to withstand the maximum output thrust without affecting valve performance.

6.7. Actuator shall be sized considering the breakaway thrust corresponding to maximum differential pressure of valve ASME/ANSI Rating required at the valve stem to open and close the valve. A factor of safety of 1.25 shall be considered in the actuator design. Due correction factor shall be applied for the temperature and pressure rating.

6.8. Actuator maximum thrust shall be limited such that the allowable stress values of valve stem is not exceeded during valve operation. To prevent the torque/thrust output of a hydraulic actuator exceeds the valve MAST, the actuator shall be provided with a regulator and a calibrated safety relief valve or a pressure limit device as min. requirement. The design torque or thrust shall be that which is generated at the maximum operating pressure with a 1.1 time relief valve set pressure.

6.9. Actuator / valve interface shall meet the applicable requirements of MSS-SP-101. To assure geometrically accurate valve/actuator alignment, a centering ring as required may be provided.

6.10. Actuator shall be capable of opening or closing the valves within the operating time indicated in the Actuator Data Sheet(s). Provision shall be made for slower actuation during maintenance and field-testing activities.

6.11. Actuator shall be provided with valve position switch/indicator which shall clearly show

whether the valve in open, close or in partially open position.

6.12. Mechanical stops shall be provided to limit the actuator travel independently from any valve stops.

6.13. Threading connection shall be NPT as per ANSI B 1.20.1 and flange connection shall be as per ASME B 16.5, ASME 16.47A & MSS SP 44 (as applicable). The tubing, fitting and valves shall be SS 316 stainless steel. All the fittings should be of dielectric type. All tubing shall be properly supported and shielded from damage by a suitable protective cover.

6.14. Each actuator shall be provided with a manual hydraulic module incorporating a positive displacement piston pump, directional control valve etc. In addition, by-pass for high-speed operation shall also be provided. This manual hydraulic pump module shall be mounted as an integral component of actuator.

6.15. Positive displacement hand pump to be provided as a part of the manual hydraulic pump module shall eliminate cavitation or sucking air. It shall be possible to stroke the hand-pump at any speed without drawing a vacuum into the pumping chamber. The hand pump shall be provided with an individual suction filter, block valves, pressure gauge, relief valve and check valve. Hand pump shall be of SS or superior.

6.16. The Control logic shall enable the following:

a) Local and Remote operation of the Valve.
b) Explosion proof junction box (PESO certified for use in Hazardous area Zone-1 , Gr IIA/B as per IEC 60079) shall be provided along with actuator for control logic.
c) Local Function shall include open/close facilities through push buttons provided on the junction box. Suitable relays shall be provided inside the junction box.
d) Remote function shall facilitate remote closure and opening of the valve (without any manual intervention if all the process interlocks are met). In case electrical signal to solenoid valve fails, the valve shall remain in the stay put position
e) Manual local hydraulic operation of the valve, with hand pump, in case of non-availability of the pneumatic (gas).
f) High differential pressure switch shall inhibit the remote operation of the valve, when the differential pressure becomes high. However, it shall be possible to operate the valve locally. Emergency Shutdown of the valve shall takes place when the pressure in the line drops below 50% of rated pressure. In this case valve shall operate manually.
g) Close command (or open command) shall be inhibited during valve opening (or valve closing) and be made effective only after 100% opening (or closing) is achieved.
h) Tubular lugs shall be provided for termination of all cables inside the junction box.
i) Cross ferruling shall be provided for each cable termination inside the junction box.

6.17. Vendor shall provide the following potential free contacts for PURCHASERs use.

a. Local/Remote selector switch in LOCAL position
b. Local/Remote selector switch in REMOTE position
c. High Differential Pressure
d. Valve OPEN indication
e. Valve CLOSE indication

All the potential free contacts and the REMOTE OPEN & CLOSED Commands shall be provided at a terminal block in the actuator control panel

6.18. Hydraulic fluid used shall be oil based and shall have a cleanliness level of SAE AS4059 Tab 1, class 6; or ISO 4406 17/15/12. The actuator shall be supplied filled with hydraulic fluid approved by Owner/ Consultant. Manufacturer to ensure chemical compatibility with internal actuator part, lubricants and environment conditions.

6.19. Actuator and its accessories shall be weather proof protected to IP-65 as per IEC-600529.

6.20. All compartments and housing containing electrical devices such as switches, etc. shall be intrinsic safe/Flameproof suitable to Zone-1/2, group IIA/IIB, Temp. Class T3 as per IEC/IS or better.

6.21. All electrical / electronic components of the Gas Over Oil Actuator, to be intrinsically certified/ Flameproof by the statutory authorities suitable for hazardous area specified. The requirement of the statutory approvals for usage of equipment/ Instruments/ Systems in the electrically hazardous areas shall be as follows:

6.22. Solenoid valves shall be mounted inside the actuator control panel for the remote open/close operation of the valve actuators. Solenoid Valves shall be intrinsically fire safe and necessary certificate has to be certified.

6.23. All equipment and accessories shall be tropicalised and provided with anticorrosion protection, suitable for use in corrosive atmosphere.

6.24. All material shall be new, clean and free from rust, pits and obvious defects

6.25. A copy of approval for items such as limit switches, Solenoid valves, electro- pneumatic converters, smart positioned, whenever specified from local statutory authority, as applicable, such as Petroleum & Explosive Safety Organization (PESO) / Chief Controller of Explosives, Nagpur (CCOE) or Director General of Mines Safety (DGMS) in India, Along with:

- Test certificate from recognized test house like CIMFR / ERTL etc. for flameproof enclosure and / or intrinsic safety, as specified in the data sheet, as per relevant Indian Standard for all Indian manufactured equipment's.

- Certificate of conformity from agencies like LCIE, Baseefa, PTB, CSA, UL etc. for compliance to ATEX directives or equivalent recognized standards for all equipment's manufactured outside India.

6.26. Provision shall be made to prevent accidental pressure build up in the actuator.

6.27. The construction of the actuator and its controls shall be such that proper manual operation and maintenance can be carried out by skilled personnel without the risk of being injured e.g. by moving parts.

6.28. Bearings shall be factory packed with grease and shall not require additional lubrication for the life of the actuator.

6.29. Unless specified otherwise in the data sheet, the actuator shall be equipped with limit valves which immediately shut off the gas supply to actuator when the valve reaches one of its end positions.

6.30. Actuator shall be provided with pressure gauges for pneumatic and hydraulic systems. The pressure gauges for the hydraulic system shall be in circuit with the pressure relief system. The Pressure gauges shall be liquid filled type with dial size of 150 mm and case material of SS304.

6.31. A high pressure dehydrating filter cartridge shall be provided to remove condensate, moisture, foreign particles and any corrosive contaminants from pipeline gas.

6.32. The sound level of the gas escaping into the atmosphere when the actuator is in operation shall not exceed 85 dBA, measured at a distance of 1 meter.

6.33. The actuator shall be operated by either of the following two methods:

- For the remote control, the actuator shall have a solenoid valve, limit switches, relays, etc. and shall be suitable for remote and local operation as per description provided in control logic. Electrical signal supplied is a momentary type with 1 sec duration signal. Actuator shall have a self-retaining system of the above signal in its control circuit. The Solenoid valve (SOV) shall be 24 VDC with intrinsic safe type. The body of SOV shall be SS and solenoid coil continuously rated for specified voltage with class F rating.
- For the local-control the actuator shall be suitable for local operation with line gas over oil cylinders or through nitrogen bottles. The devices and accessories, which do not require the electricity for their operation, shall be provided in the actuators as per this specification. The actuator shall have a hand pump in conjunction with the oil circuit to achieve local control with hydraulic shock functionality.

6.34. Actuators shall be provided with magnetic/mechanical/proximity type limit switches including minimum 2 nos of DPDT & 4 sensors/switches (2 open and 2 close positions). If proximity switch is provided, suitable amplifier shall be provided along with it.

6.35. The limit switches shall be equipped in flameproof terminal box and shall be wired in the actuator control circuit by the vendor so as to cut off power to the actuator once the end positions of the valve are reached. This is required to de-energize the solenoid valves in the steady state condition and failure of electrical power will not affect the valve position. Please note that there proposed Limit switches shall be able to draw a "Indication/Lamp" at client's supplied LCP without any required switch amplifier /barrier/isolators upon actuation.

6.36. The stroke of the Actuator shall be easily adjustable in steps of maximum 0.5° for Ball valves.

6.37. Speed control nozzles for adjusting the valve speed over a wide range shall be provided.

6.38. A local/remote switch of flameproof type shall be installed to prevent remote control during maintenance work. This switch shall be provided with a hole 12mm in diameter for locking with pad lock in either position. This local/remote switch shall be wired up to the junction box as per circuit diagram.

6.39. All control accessories, pneumatic and hydraulic, shall be mounted in an enclosure and shall be fully wired and tube. The enclosure shall be weatherproof as per IP 65. The enclosure shall be made of SS 304/ SS 316 material and shall be corrosion resistant.

6.40. All bleed and vent connections wherever required shall be piped outside the actuator cabinet so as to prevent gas pocketing inside the actuator cabinet. The actuator will be of an automatic self-purging design such that any gas pocket in the actuator will be eliminated

6.41. Vendor shall be responsible for integrating the potential free NO or NC contacts of Remote Telemetry Unit (RTU's) for open and close command in interlock circuit. These commands will be of momentary type with 1 sec. duration

6.42. All mounting accessories needed for installing the actuator, tanks etc. are in manufacturer's scope of supply.

6.43. The interconnecting cabling, interconnecting pipe work between the actuator and the valve, adapters, tubing, cable glands, junction box/terminal box are in manufacturer's scope of supply. Junction box/terminal box shall have min. ½" NPT [3 Nos with suitable cable gland with PVC hood + 1 no spare plugged], ¾" NPT [2 nos with suitable cable gland + 1 no spare with plugged] + 1" NPT with cable and PVC hood entries. These mentioned cable entries are for the customer use other than required cable entries by actuator vendors.

6.44. The actuator shall be supplied totally self-contained, wired, tube and mounted on ball valve. In case of a separate control box, wiring and tubing between control box and actuator is in the vendor's scope. ½" or 3/4" tubing including all connectors between the actuator and control box and interconnecting piping work upstream & downstream of the valve and the control box shall be provided. The process connection shall be provided as 1/2" SW tapping (each on upstream and downstream of valve) on process main line for line gas tapping or as per P&IDs. The Differential Pressure Limit Switch shall be connected internally by the actuator vendor and separate process connection for connecting Differential Pressure Limit Switch shall not be considered by actuator vendor.

6.45. Vendor to develop actuator wiring diagram in consultation with Owner/PMC w.r.t. type of limit switches, SOV. Required continuous or intermittent power supply, aux supply etc for the momentary pulse signals.

6.46. Threading connections shall be NPT as per ANSI B 1.20.1 and flange connection as per ANSI B 16.5/ANSI B 16.47-A Series. The tubing, fittings and valves shall be stainless steel with Swage Lock / Parker fittings & Sandvik tubing.

6.47. Tubing for venting shall be kept/considered for the height of 3 meter from valve operating platform

6.48. All mounting accessories needed for installing the actuator and its accessories are in manufacturer's scope of supply.

6.49. The interconnecting cabling, interconnecting pipe work between the actuator and the manual hydraulic module, adapters, tubing, cable glands, junction box as required are in manufacturer's scope of supply.

6.50. The Instruments junction boxes for flameproof instruments shall be provided with flameproof junction boxes with weatherproof protection of IP-65. Also for intrinsically safe instruments weather proof to IP-65 junction boxes to be provided.

6.51. Actuator shall be suitable for the design temperature of -20°C to 65°C and design pressure of 98 barg and same to be reflected at the documentations.

6.52. CONTRACTOR/Vendor shall ensure that the design life of the actuator shall be minimum 20 years and shall provide declaration about the design life

6.53. Actuator and all accessories shall be suitable to the both Dry & Wet Natural Gas properties along with saline and corrosive environment.

6.54. Lifting U-shape hook/lug with suitable belt along with actuator to be provided.

6.55. All instrument tubing and fitting shall be complying to ASTM F 1387 and MSS SP-99 including testing criteria as min. requirements.

6.56. Vendor to provide Pressure transmitters for local-remote monitoring of System pressure i.e inside the tank/reservoir, actuator etc.

6.57. Name plate should contain details of design pressure, operating pressure along with design temperature.

7.0 INSPECTION AND TESTS

The actuator Manufacturer shall perform all inspection and tests as per the requirements of this specification and the relevant codes at his Works, such inspection and tests shall be, but not limited to, the following:

7.1. Tests at the Actuator Manufacturer's Shop:

a) Electrical and mechanical operating tests.

b) Seal test of hydraulic circuits.

c) Check of required functions.

d) Check of operating time control.

e) Check of limiting device operation.

f) Check of the actuator torque or thrust.

g) Entire functional test with actual condition by operation of solenoid valves, Limit switches, DPS with integrated 5-valve manifold [Swagelok/Parker Make only] with OEM's supplied panel, L/R selector switch and TLD/Pressure regulator shall be carried out.

7.2. Tests at the Valve Manufacturer's Shop

a) Test and check covered by point 6.1 after assembly with valve.

b) No load test (DP=0) and load (DP max) Operations with the minimum required feeding pressure (15 barg).

c) Check of the limiting device operation.

d) Various tests on the valve according to provisions of specific documentation.

e) Testing shall conform to actual field operating conditions.

7.3. All actuators shall be visually inspected.

7.4. Dimensional check on actuators shall be carried out as per the Owner/ Consultant approved

drawings.

7.5. Chemical and mechanical properties as per relevant materials standards and this specification shall be checked.

7.6. Complete actuator housing with internals including the open/close gas over oil circuits of all actuators shall be subjected to a hydrostatic pressure test by applying 1.5 times the actuator design pressure for a minimum period of 2 hours. Chart recorder shall monitor pressure. No leakage shall be permitted during the hydrostatic test.

7.7. Actuator functional test shall be carried out by mounting the actuator on a test rig, and applying the hydraulic fluid pressure. The actuator shall be successfully stroked ten times for open and close by suitably applying the hydraulic fluid pressure through hand provided. Actuator position indication shall be checked for correct operations during the test.

7.8. Non-destructive examination of individual actuator material and components consisting of but not limited to castings, forgings, plate and assembly welds shall be carried out by the Manufacturer. As a minimum, the following shall be carried out as applicable

f) All casting of pressure containing parts shall be radiographically examined as per ASTM E-94 and E-186/E-280 or E-446 as applicable, at quality level 2-2T. Category A, B or C defects shall not exceed the severity level for Class 2. Category D, E, F or G defects shall not be accepted.

g) All forgings shall be ultrasonically examined to ASTM E-609.Quality 1 will be the minimum level of acceptance.

h) All machined surfaces shall be liquid penetrant examined as per ASTM E-165. Surface discontinuities shall not be acceptable.

i) Sealing areas within the actuator body shall be completely inspected by magnetic particle methods in accordance with ASTM E-709. Surface discontinuities shall not be acceptable.

7.9. Valve/Actuator Assembly Test:

After testing of individual actuators has been completed, the actuators shall be mounted on valves. Integrated valve and actuator tests shall be carried out at the Valve Manufacturer's Works, in compliance with the requirements stated in Owner's Specification for Ball Valves enclosed with the material requisition/purchase order.

7.10. Owner reserves the right to perform stage wise inspection and witness tests as indicated in Cl. 7.1 to 7.9 above at Valve Manufacturer's works prior to shipment/Actuator manufacturer's shop. Manufacturer shall give reasonable access and facilities required for inspection to the

Owner's Inspector.

7.11. Owner reserves the right to require additional testing at any time to confirm or further investigate a suspected fault.

7.12. The cost incurred shall be to Manufacturer's account. In no case shall any action of Owner's Inspector relieve the Manufacturer of his responsibility for material, design, quality or operation of the actuators. Inspection and tests performed/witnessed by the Owner's Inspector shall in no way relieve the Manufacturer's obligation to perform the required inspection and tests.

7.13. Acceptance criteria: Actuator has to operate smoothly without sticking at any point during all the opening and closing strokes. Min. 10 cycles [10 open & 10 close] to be performed. The test report of the same to be submitted. The average of the torque values obtained during the min. 10 cycles are compared with the quoted and static torque values and they have to be at least equal to the 80% of the static torques, recorded during the torque test. A torque variation of 5% from one cycle and the other is accepted due to test bench load variation. A continuous decrease of torque values from one cycle and the following is not accepted meaning a drop in the actuator performance.

Test shall be performed on bare actuator with all components along with Valve as integrated test at Valve manufacturer workshop. This shall be in the witness category of Owner/Owner's representative

All test & inspection shall be carried out in accordance to latest API 6DX. In case of any conflicts between this specification, data sheet, QAP and API 6DX requirements, more stringent to be followed or to be done in consultation with owner's approval.

8.0 SHIPPING

8.1 All threaded and flanged opening shall be suitably protected to prevent entry of foreign material.

8.2 The actuator shall be supplied pre-assembled except piping/tubing, actuator, actuator control unit, tanks and other accessories shall be packed separately.

8.3 Protective grease oil coating shall be applied on the surface to protect them from rusting.

8.4 Package shall be marked legibly with suitable marking ink the following:

- Order number

- Package number
- Manufacturer's name
- Model No. & Thrust
- Tag number
- Inspection agency name or logo

9.0 TEST CERTIFICATES/REPORTS

Manufacturer shall submit the following certificates, duly certified by TPI as per EN 10204 (latest edition) and indicating project code (P218):

- Mill test certificates relevant to the chemical analysis and mechanical properties of the materials used for the actuator pressure containing parts as per the relevant standards and specifications.
- NDT reports for radiography, ultrasonic, magnetic particle and liquid penetrant inspection.
- Test report on operation of actuators including operating time.[Opening & Closing time]
- Test report on hydrostatic test of actuators.
- Test report on actuator/valve assembly tests.
- All other actuator test reports and certificates as required by this specification.
- Valid PESO certification of each electric-electronic –instrument components at the time of installation

The certificates shall be valid only when signed by Owner's Representative or TPIA appointed by the Contractor at the discretion of Owner. IRN to be issued by TPI for dispatch from Manufacturer's works.

10.0 PAINTING AND MARKING

10.1. Actuator surface shall be thoroughly cleaned, freed from rust and grease and applied with sufficient coats of corrosion resistant paint suitable for marine/industrial environment as indicated in the Actuator Data Sheet. Surface preparation shall be carried out by shot blasting to SP-6/ SA 2.5 in accordance with "Steel Structures Painting Council-Visual Standard SSPC- VIS-1". Manufacturer shall indicate the type of corrosion resistant paint

used in the drawings submitted for approval.

10.2. All actuators shall be marked as per Manufacturer's standard and shall have a permanently attached stainless steel plate with the following, as a minimum, detail:

- Tag Nos.
- Manufacturer's Name or Trademark (Apply on Actuator and / or nameplate)
- Actuator Type, Model No., Serial No.
- Suitable for mounting on Valve __" Size, ____ANSI Rating of Ball Valve
- Max. Allowable operating pressure or voltage.
- Area Classification in which the equipment can be used.
- Actuator characteristics data.
- Inspection agency name or logo

10.3. All threaded and flanged opening shall be suitably protected to prevent entry of foreign material. The actuator shall be supplied pre-assembled.

10.4. Paint system shall be in accordance with TABLE A5, ISO 12944-5 suitable for highly saline & corrosive environment. (min. Total DFT to be 300 micron).

10.5. Actuator vendor to follow painting specification as specified and inline to the Valve painting specifications. Actuator color shade to be proposed and approved by Owner during detail engineering stage

11.0 SPARES AND SPECIAL TOOLS

11.1 Manufacturer shall provide recommended spares and accessories for actuators required during start-up and commissioning.

11.2 Manufacturer shall recommend and quote separately the spares for actuators required for two years of normal operation and maintenance.

11.3 In addition, Manufacturer shall provide the special tools required for the operation and maintenance of the actuators.

11.4 Dip sticks to be provided with the actuator to judge the oil level in the tank. Hydraulic oil tank shall be equipped with dip stick.

12.0 DOCUMENTATION

12.1. Post award, Manufacturer shall submit the following documents for approval:

a) Project/Order Specific Document Control Index specifying list of total number of documents to be submitted along with order execution schedule & planning

b) General arrangement drawings (GAD) and sectional drawings with materials list for actuators clearly showing all design features

c) Technical catalogs giving technical specification and other information for each type of actuators and its accessories.

d) Schematic/Operating diagrams showing the complete actuator control circuit with all accessories

e) Typical installation drawings complete with valve assembly.

f) Actuator sizing calculation including back up tank sizing calculations

g) Details of gas over oil circuit with complete sequencing of port from open to close and close to open position.

h) Details of the hydraulic (oil) fluid proposed for filling the actuators. OEM to also provide required any kind of consumables like Hydraulic oils with MSDS and quantity for the 3 Years post defect liability period.

i) Details of corrosion resistant paint to be applied on the actuator surface.

j) Reference list of similar supplies of actuators with all relevant details including Project, Year, Owner, Location, Size, rating of valve, Model Number, Type, Torque output details, Service, etc. wherein the actuators have been installed in the last five years.

k) A detailed specification sheet for valve actuator providing all the details regarding type, materials of construction for various parts etc.

l) Installation drawing complete with valve assembly.

m) Actuator sizing calculations including relation between required torque of valve and actuator output torque.

n) Information asked for vide section 4.0 of this specification and actuator sizing as per Actuator Data Sheet.

o) Drawing showing connections by Purchaser (piping, electrical etc.)

p) Wiring diagram (actuator electrical circuitry) incorporating latching of momentary signals, remote/local switch, and limit switches.

q) Junction box /terminal block nos. for I/O signals.

r) Data sheet of each component.

s) Parts list with OEM part no and catalogue

t) Recommended spare parts with prices.

u) Assembly details (Valve & Actuator).

v) Traceability report for hydro test of gas / hydraulic cylinder shall be provided.

w) Painting specification

x) QAP

12.2. Test certificates and certificates from statutory bodies.

12.3. Manufacture of actuators shall commence only after approval of the above documents. Once Owner/ Consultant has given the approval, any change in design, material and method of manufacture shall be notified to Owner/ Consultant whose approval in writing of all changes shall be obtained before the actuator is manufactured.

12.4. Vendor to submit documentation attaching all project specific cover sheet, project order no. of Client, project specific revision no.

12.5. The approval of the drawings/documents will not absolve vendor of the responsibility with respect to correct operation of the actuator.

12.6. Manufacturer's documentation, catalogues, drawings, operating and maintenance manuals etc. shall be in English language.

13.0 GUARANTEE & WARRANTY:

13.1 Contractor shall guarantee that the complete scope of supply shall be safely and reliably meet all of the requirements of this specification.

13.2 The VENDOR shall guarantee that all work will be performed in accordance with good and sound engineering and construction practices and within the requirements of this specification.

13.3 The equipment, accessories and all materials supplied by the VENDOR shall be free from defects, shall be suitable for the use for which they are intended and shall perform in accordance with the requirements of this specification.

13.4 The VENDOR shall furnish a guarantee for this actuator comprising of all its component including instruments, accessories, fittings, internals, etc., for a period of defect liability period.

13.5 The VENDOR shall take single point responsibility for the complete package, including the sub-contractor supplied components, the proprietary equipment and components included in package and supplied loose in accordance with this specification.

13.6 Contractor shall provide Warranty support for a period of defect liability period.
Warranty shall apply to defective material workmanship and facility design. Warranty work shall be done at owner local facilities. The cost of correction / replacement of any Warranty items shall be borne by the Contractor.

DATA SHEET for GAS OVER - OIL POWERED ACTUATORS FOR BALL VALVES

1.	Actuator Manufacturer	:	BY VENDOR
2.	Specification for Gas Over Oil Actuator	:	MEC/ TS / 05 / E5 / 002
3.	Actuator Type	:	Gas Over Oil
4.	Tag No.	:	--------
5.	Line No.	:	----------
6.	Service	:	Natural Gas
7.	Vendor to furnish after sizing the actuator, the filled in torque Table no-2		
8.	Actuator Shut-off Pressure	:	As per the Table-1
9.	**Process Conditions**		
	Power Gas	:	Natural Gas
	Gas Temperature	:	As per Table-1
	Line Gas Pressure	:	As per Table-1
	Molecular Weight	:	As per Attached Sheet
	Cp/Cv	:	As per Attached Sheet
	Compressibility Factor	:	As per Attached Sheet
10..	Power Gas Feed Connection from main line	:	1/2” SW
11.	Actuator remote operation (For open and close)	:	Required

12.	Actuator Feed Gas	:	a) Line gas b) N_2 Bottles C) Oil
13.	Valve Position Limit Switch	:	Required (DPDT contact for open and DPDT Contact for close position separately)
14.	Local/ Remote selector switch and its status contact	:	Required (shall be wired up to junction box as per circuit diagram)
15.	Pneumatic limit valves and solenoid, pilot valves to shut-off gas supply to Actuator when valve reaches one of its end positions	:	Required
16.	Self retaining system for retaining momentary open or close signals in the control circuit	:	Required
17.	Electrical conduit connection (cable entries to junction box for purchaser's cable)	:	Required
18.	Operating voltage for a) Solenoid Valves b) Relays	:	24V D.C. ± 10%
19.	Contact rating for a) Limit Switches b) L/R Switch (Status)	:	2A at 24V D.C.
20.	Pad lock with L/R Switch	:	Required
21. a)	Enclosure for Actuator	:	Certified weatherproof as per IP-65
b)	Electrical items like solenoid valves, junction boxes, relays, cable glands	:	Certified weatherproof to IP65 & Explosion proof certified for Class 1, Div. 2 Gr. C & D T3

22.	Area Classification	:	NEC Class 1 Div. 2 Gr. C & D T3
23.	Material of construction for all tubing, Valves, piping and fittings etc.	:	SS 316
24.	Make & Model No. of Actuator	:	By Vendor
25.	Accessories Required	:	Required as per Specification
26.	Manual/ Hydraulic Override	:	Required as per Specification
27.	Time required for full opening/ Closing of the ball valve	:	3 seconds per inch dia. Of valve

TABLE-1

ITEM : GAS OVER – OIL BALL VALVE ACTUATORS

Sl. no	Tag No.	Size/ Class	Type of Valve	Line No.	Gas Temp (°C)		Line Gas Pressure (kg/cm^2g)		Delta P Shut Off (kg/cm^2g)	Location
					Min	Max	Min	Max		
		*	*	-	-29	65	25	85	92	

*As per MR.

TABLE-2

ITEM : GAS OVER OIL BALL VALVE ACTUATORS

Sl. No.	Tag No.	Data from Ball Valve Vendor for			Ball Valve Torque Figure with a safety Factor of 1.25		Actuator Generated Torque considering Note-3 (Note-1)		Model Selected
		Break Torque (Nm)	Running Torque (Nm)	Max Allowable Valve Stem Torque (Nm)	Break Torque (Nm)	Running Torque (Nm)	Break Torque (Nm)	Running Torque (Nm)	
1.0	As per MR.								
2.0									
3.0									

NOTE :

1. THESE FIGURES SHALL BE USED AS BASIS FOR TESTING THE ACTUATOR PERFORMANCE DURING FACTORY TESTING THE ACTUATOR ACCEPTANCE WOULD BE CARRIED OUT AFTER VERIFYING SUCCESSFUL TESTING COMPLETE BALL VALVE WITH ACTUATOR ASSEMBLY.
2. ALL TORQUE FIGURES MUST BE IN Nm.
3. Pipeline operating pressure range 25 to 85 kg/sq.cm(g).

SPECIFICATION

FOR

MANUALLY OPERATED HYDRAULIC ACTUATOR (HOV)

T.S. NO.: MEC/ TS / 05 / E5 / 004

1.0 SCOPE

1.1 This specification covers the minimum requirements for design, manufacture, inspection and testing of quarter turn hydraulic actuators (HOV) suitable for operation of ball valves in pipeline/piping systems handling hydrocarbons in gaseous phase.

1.2 This specification indicates the minimum supply requirements and does not relieve the Vendor from his responsibilities concerning the design and the safe operation of the supplied equipment.

1.3 The valve manufacturer shall also be responsible for proper operation of the actuator that shall develop a torque or a thrust sufficient to conveniently open and close the valve always within the limits established by the resistance of the mechanical elements of the valve itself.

1.4 Valve and actuator shall be supplied as a single assembly complete in all respect and ready for installation at site.

1.5 This specification shall be read in conjunction with Owner's data sheets and specifications for pipeline ball valves.

1.6 The CONTRACTOR/ Manufacturer is free to and solely responsible to conduct any other tests which he thinks require and deemed necessary to meet the guarantee and the integrity of the pipeline.

2.0 DEFINITIONS

Owner	:	As per tender
Consultant / Engineering Consultant (EC)	:	MECON LIMITED
Contractor/Vendor	:	Any supplier for goods and services or supplier/ manufacturer of equipment or construction contractor appointed/ nominated by Owner and that is not a sub-contractor of Consultant for the Services it provides.
Party	:	Any one of the Owner or the Consultant
Parties	:	Both Owner and the Consultant

Third Party	:	Any other person or entity as the context requires
TPIA	:	Third Party Inspection Agency for Site Construction, manufacturing / production of material required till the project completion for ensuring the quality at site and at manufacturer's premise appointed by the Vendor
Services	:	The services to be performed by the Vendor for and in relation to the Facility and includes the detailed works mentioned in this tender
BEP	:	Basic Engineering Package
RFP	:	Request for Proposal
FEED	:	Front End Engineering & Design
Associated Facilities	:	Dispatch, Receipt Stations & Sectionalizing valve stations etc.
Site	:	The land, location, RoU and/or includes any other place as may be designated by the Owner in connection with the Facility where the Services are to be provided/ performed by the Vendor
Site Office	:	NA

3.0 REFERENCE DOCUMENTS

i. Reference has been made in this specification to the latest edition of the following Codes, Standards and Specifications.

- API 6DX - Standard for Actuator Sizing and Mounting Kits for Pipeline Valves.
- PNGRB [T4S] Latest of Cross-Country Pipeline
- ISO 5211 - Industrial valves -- Part-turn actuator attachments
- ISO 12490:2011 - Petroleum and natural gas industries - Mechanical integrity and sizing of actuators and mounting kits for pipeline valves
- ISO 14313:2007 - Petroleum and natural gas industries - Pipeline transportation systems
- - Pipeline valves
- API 6D – Specification for Line Pipes

- ASME B 31.3 - Process Piping
- ASME B31.8 - Gas Transmission & Distribution Piping Systems.
- ASME B 16.5 - Steel Pipe Flanges and Flanged Fittings
- ASME B16.47 - Large dia. Steel Flanges: NPS 26 through NPS 60
- MSS SP 44 - Steel pipeline flanges
- ASME Sec VIII - Boiler and Pressure Vessels Code
- ANSI B 1.20.1 - Pipe Threads, General Purpose
- NEC - National Electric Code
- IEC - International Electro Technical Commission & Sec IX
- MSS-SP-101 - Part-Turn Valve Actuator Attachment - Flange and Driving
- Component Dimensions and Performance Characteristics
- SSPC-VIS-1 - Steel Structures Painting Council Visual Standard
- IEC-60079 - Electrical apparatus for explosive gas atmosphere
- IEC-60529 - Degree of protection provided by enclosure

ii. In case of any conflict between various requirements of specifications and code requirements, the most stringent requirement shall be followed and the decision of Owner in the resolution of the conflict shall be final and shall be implemented by contractor without any time and cost implication.

iii. In the event of an inconsistency, conflict or discrepancy between any of the Standards, Specifications and Statutory requirements, the most stringent and safest requirement applicable to the project will prevail to the extent of the inconsistency, conflict or discrepancy. Any inconsistencies, critical to the design, shall be brought to the attention of the EPMC/ CONSULTANT / OWNER for resolution. The OWNER's clarification shall be final.

iv. The manufacturer shall supply a certificate of conformance to this standard. The certificate shall identify the actuator type, model, and serial number; any additional requirement specified by the manufacturer or purchaser; and a certification statement that the actuator and mounting kit are in full conformance with this product standard edition and all addenda.

v. The manufacturer shall provide procedures for the safe removal of the spring/spring module.

vi. Welding in compliance with API 6DX Clause 9.

vii. Quality Control in compliance with API 6DX Clause 10

viii. Final acceptance testing in compliance with API 6DX Clause 11

ix. Surface Protection in compliance with API 6DX Clause 12

x. Preparation for shipment in compliance with API 6DX Clause 14

xi. Actuator stops shall control position even if valve has integral stops.

xii. Any other requirement which are specified at latest API 6DX with all issued addendum(s) but not covered in this document, shall be complied by the vendor in totality

4.0 MATERIAL

4.1. Actuators shall be supplied with SS 316 stainless steel trim. Materials of all parts and seals shall be compatible with the operating hydraulic fluid. All materials shall be suitable for the ambient conditions indicated in the Actuator Data Sheets.

4.2. All tubing, fittings & instrument valve shall be of SS304/316 make. Fittings and Tubing material shall be of Swagelok-Parker and Sandvik make only.

4.3. Actuator and all accessories shall be suitable to the both Dry & Wet Natural Gas properties along with saline and corrosive environment.

5.0 DESIGN & CONSTRUCTION

5.1. Hydraulic actuator shall be of rotary vane mechanism type or double acting scotch yoke mechanism type with pistons and shall maintain the selected valve position fully open or closed with pressure equalized.

5.2. Actuator body shall be designed to ASME B31.3 and all body joints shall be in accordance with ASME Section VIII, Division 1.

5.3. Actuator shall be suitable for direct mounting on the ball valves without changing the standard top works of the valve and shall have the capability to be mounted or removed from the valve when the valve is in service.

5.4. All pressure and load carrying components in the actuator shall be designed to withstand the maximum output thrust without affecting valve performance.

5.5. Actuator maximum thrust shall be limited such that the allowable stress values of valve stem is not exceeded during valve operation.

5.6. Actuator – valve interface shall meet the applicable requirements of MSS- SP-101. To assure geometrically accurate valve/actuator alignment, a centering ring as required may be provided.

5.7. The actuator shall be such that the valve can be open/ closed with minimum force application. The actuator shall be sized meeting the safety factor of 1.25 as required by the valve operation at the maximum differential pressure in the line corresponding to valve class rating. However, for the hydraulic actuator of all valves the total force required to operate the valve under maximum differential pressure shall not exceed 350N.

5.8. Mechanical stops shall be provided to limit the actuator travel independently from any valve stops.

5.9. Threading connection shall be NPT as per ASME B 2.1 and flange connection shall be as per ASME B 16.5/ASMB B 16.47 Series A. The tubing, fitting and valves shall be SS 316 stainless steel. All the fi tting s should be of dielectric type. All tubing shall be properly supported and shielded from damage by a suitable protective cover.

5.10. Each actuator shall be provided with a manual hydraulic module incorporating a positive displacement piston pump, directional control valve, hydraulic reservoir, level indicator and pressure relief. In addition, by-pass for high-speed operation shall also be provided. This manual hydraulic pump module shall be mounted as an integral component of actuator.

5.11. Hydraulic reservoir required to be provided as a part of the manual hydraulic pump module shall be manufactured 316 stainless steel and be fitted with internal weir /baffles to prevent return oil channeling directly to pump suction, level gauge with isolating valves, inspection/cleaning cover, vent/breather, drain with isolation valve and SS plug..

5.12. Positive displacement hand pump to be provided as a part of the manual hydraulic pump module shall eliminate cavitations or sucking air. It shall be possible to stroke the hand-pump at any speed without drawing a vacuum into the pumping chamber. The hand pump shall be provided with an individual suction filter, block valves, pressure gauge, relief valve and check valve. Hand pump MOC shall be SS 304/316 only.

5.13. Hydraulic fluid used shall be oil based and shall have a cleanliness level of NAS 1638, Class 6. The actuator shall be supplied filled with hydraulic fluid approved by Purchaser.

5.14. Actuator and its accessories shall be suitable for outdoor installation and shall be provided with weather proof enclosures as per NEMA 4X or equivalent.

5.15. All compartments and housing containing electrical devices such as switches, etc. shall be intrinsic safe suitable for Zone- 1/ 2, group IIA/IIB, Temp. Class T3 as per IEC/IS.

5.16. Actuator shall be provided with valve position switch/indicator which shall clearly show whether the valve is in open and close positions. Limit switch shall be of magnetic/ mechanical switch type including minimum 2 nos of DPDT and 4 sensors/ switches (2 Open & 2 Close). Limit switch shall be provided with integral junction box/terminal box having 2 no. of ½" NPT F cable entries. One cable entry shall be plugged.

Please note that there proposed Limit switches shall be able to draw a "Indication/Lamp" at client's supplied LCP without any required switch amplifier /barrier/isolators upon actuation.

5.17. All mounting accessories needed for installing the actuator and its accessories are in manufacturer's scope of supply.

5.18. The interconnecting cabling, interconnecting pipe work between the actuator and the manual hydraulic module, adapters, tubing, cable glands, junction box as required are in manufacturer's scope of supply.

5.19. Contractor shall indicate actuator model no., valve torque actuator torque figures in a tabular form and shall be given for the different valve positions. The torque figure shall be expressed in Newton Meters (NM).

5.20. Actuator shall be suitable for the design temperature of -20°C to 60°C. & design Pressure of 98 barg . All components shall be suitable in accordance to that.

5.21. CONTRACTOR/Vendor shall ensure that the design life of the actuator shall be minimum 20 years.

5.22. Actuator and all accessories shall be suitable to the both Dry & Wet Natural Gas properties along with saline and corrosive environment

6.0 INSPECTION AND TESTS

6.1 The actuator Manufacturer shall perform all inspection and tests as per the requirements of this specification and the relevant codes at his Works, prior to

shipment to valve Manufacturer's works. Such inspection and tests shall be, but not limited to, the following:

6.1.1 All actuators shall be visually inspected.

6.1.2 Dimensional check shall be carried out as per the Owner approved drawings.

6.1.3 Chemical and mechanical properties as per relevant materials standards and this specification shall be checked.

6.1.4 Complete actuator housing with internals including the open/close hydraulic circuits of all actuators shall be subjected to a hydrostatic pressure test by applying 1.5 times the actuator design pressure for a minimum period of 2 hours. Chart recorder shall monitor pressure. No leakage shall be permitted during the hydrostatic test.

6.1.5 Actuator functional test shall be carried out by mounting the actuator on a test rig, and applying the hydraulic fluid pressure. The actuator shall be successfully stroked five

(5) times for open and close by suitably applying the hydraulic fluid pressure through hand provided. Actuator position indication shall be checked for correct operations during the test.

6.1.6 Non-destructive examination of individual actuator material and components consisting of but not limited to castings, forgings, plate and assembly welds shall be carried out by the Manufacturer. As a minimum, the following shall be carried out as applicable. All NDT test shall be witness by TPI.

6.1.6.1 All casting of pressure containing parts shall be radio graphically examined as per ASTM E-94 and E-186/E-280 or E-446 as applicable, at quality level 2-2T. Category A, B or C defects shall not exceed the severity level for Class 2. Category D, E, F or G defects shall not be accepted.

6.1.6.2 All forgings shall be ultrasonically examined to ASTM E-609. Quality 1 will be the minimum level of acceptance. For heat treatment of forging material: Temp chart shall be signed & witness by TPIA, and also power failure log shall be maintained.

All machined surfaces shall be liquid penetrate examined as per ASTM E-165. Surface discontinuities shall not be acceptable

i) Sealing areas within the actuator body shall be completely inspected by magnetic particle methods in accordance with ASTM E-709. Surface discontinuities shall not be acceptable.

b) Valve/Actuator Assembly Test

After testing of individual actuators has been completed, the actuators shall be mounted on valves. Integrated valve and actuator tests shall be carried out at the Valve Manufacturer's Works, in compliance with the requirements stated in Purchaser Specification for Ball Valves enclosed with the material requisition/purchase order.

Purchaser reserves the right to perform stage wise inspection and witness tests as indicated in Cl. 5.1 above at Manufacturer's works prior to shipment. Manufacturer shall give reasonable access and facilities required for inspection to the Purchaser's Inspector. Purchaser reserves the right to require additional testing at any time to confirm or further investigate a suspected fault. The cost incurred shall be to Manufacturer's account. In no case shall any action of Purchaser's Inspector relieve the Manufacturer of his responsibility for material, design, quality or operation of the actuators. Inspection and tests performed/witnessed by the Purchaser's Inspector shall in no way relieve the Manufacturer's obligation to perform the required inspection and tests

7.0 SHIPPING

7.1 All threaded and flanged opening shall be suitably protected to prevent entry of foreign material.

7.2 The actuator shall be supplied pre-assembled except piping/tubing, actuator, actuator control unit, tanks and other accessories shall be packed separately.

7.3 Protective grease oil coating shall be applied on the surface to protect them from rusting.

7.4 Package shall be marked legibly with suitable marking ink the following:

- Order number
- Package number
- Manufacturer's name
- Model No. & Thrust
- Tag number
- Inspection agency name or logo

8.0 TEST CERTIFICATES/REPORTS

8.1 Manufacturer shall submit the following certificates:

- Mill test certificates relevant to the chemical analysis and mechanical properties of the materials used for the actuator pressure containing parts as per the relevant standards and specifications.
- NDT reports for radiography, ultrasonic, magnetic particle and liquid penetrant inspection.

- Test report on operation of actuators including operating time. d) Test report on hydrostatic test of actuators.
- Test report on actuator/valve assembly tests.
- All other actuator test reports and certificates as required by this specification.
- Third Party Inspection Agency shall issue 3.2 certificates as per EN 10204
- Valid PESO certifications for the Limit Switch, Teminal box is mandatory

8.2 The certificates shall be valid only when signed by Owner's Inspector. Only those actuators which have been certified by Owner's Inspector shall be dispatched from Manufacturer's works.

9.0 PAINTING AND MARKING

9.1 Actuator surface shall be thoroughly cleaned, freed from rust and grease and applied with sufficient coats of corrosion resistant paint suitable for marine/industrial environment as indicated in the Actuator Data Sheet. Surface preparation shall be carried out by shot blasting to SP-6 in accordance with "Steel Structures Painting Council-Visual Standard SSPC- VIS-1". Manufacturer shall indicate the type of corrosion resistant pain used in the drawings submitted for approval.

9.2 All actuators shall be marked as per Manufacturer's standard and shall have a permanently attached stainless steel plate with the following, as minimum, details:

- Tag Nos.
- Manufacturer's Name
- Actuator Type, Model No., Serial No.
- Suitable for mounting on Valve" Size, ANSI Rating Ball Valve
- Area Classification

9.3 All threaded and flanged opening shall be suitably protected to prevent entry of foreign material. The actuator shall be supplied pre-assembled.

9.4 Paint system shall be in accordance with TABLE A5, ISO 12944-5 suitable for highly saline & corrosive environment. (min. Total DFT to be 300 micron)

10.0 SPARES AND SPECIAL TOOLS

10.1 Manufacturer shall provide the spares for actuators required for commissioning and quote separately for two years of normal operation.

10.2 In addition, Manufacturer shall provide special tools required for the operation and maintenance of the actuators.

10.3 Dip sticks to be provided with the actuator to judge the oil level in the tank

11.0 DOCUMENTATION

11.1 Post award, Manufacturer shall submit the following documents for approval:

- QAP, Data sheet, General arrangement drawings and sectional drawings with materials list for actuators clearly showing all design features.
- Technical catalogs giving technical specification and other information for each type of actuators and its accessories.
- Schematic diagrams showing the complete actuator control circuit.
- Typical installation drawings complete with valve assembly.
- Actuator sizing calculations.
- Details of hydraulic circuit with complete sequencing of port from open to close and close to open position.
- Details of the hydraulic fluid proposed for filling the actuators
- Details of corrosion resistant paint to be applied on the actuator surface.
- Clause wise list of deviations from the requirements of this specification, if any.
- Painting specification
- Valid PESO certification of each electric-electronic –instrument components at the time of installation
- Details of the hydraulic (oil) fluid proposed for filling the actuators. OEM to also provide details of required any kind of consumables like Hydraulic oils with MSDS and quantity post defect liability period.

11.2 Manufacture of actuators shall commence only after approval of the above documents. Once Purchaser has given the approval, any change in design, material and method of manufacture

shall be notified to Purchaser whose approval in writing of all changes shall be obtained before the actuator is manufactured.

11.3 Prior to shipment, Manufacturer shall submit the following to Purchaser:

11.4 Manual for installation, erection instruction and maintenance & operation instruction including a list of recommended spares for the actuators.

11.5 All documents shall be in English language only.

12.0 GUARANTEE & WARRANTY:

12.1 Contractor shall guarantee that the complete scope of supply shall be safely and reliably meet all of the requirements of this specification.

12.2 The VENDOR shall guarantee that all work will be performed in accordance with good and sound engineering and construction practices and within the requirements of this specification.

12.3 The equipment, accessories and all materials supplied by the VENDOR shall be free from defects, shall be suitable for the use for which they are intended and shall perform in accordance with the requirements of this specification.

12.4 The VENDOR shall furnish a guarantee for this actuator comprising of all its component including instruments, accessories, fittings, internals, etc., for a period of defect liability period.

12.5 The VENDOR shall take single point responsibility for the complete package, including the sub-contractor supplied components, the proprietary equipment and components included in package and supplied loose in accordance with this specification.

12.6 Contractor shall provide Warranty support for a period of defect liability period.
Warranty shall apply to defective material workmanship and facility design. Warranty work shall be done at owner local facilities. The cost of correction / replacement of any Warranty items shall be borne by the Contractor.

DATA SHEET for MANUAL OPERATED HYDRAULIC ACTUATORS FOR BALL VALVES

1.	Actuator Manufacturer	:	BY VENDOR
2.	Specification for Actuator	:	MEC/ TS / 05 / E5 / 004
3.	Actuator Type	:	MANUAL OPERATED HYDRAULIC
4.	Tag No.	:	--------
5.	Line No.	:	----------
6.	Service	:	Natural Gas
7.	Vendor to furnish after sizing the actuator, the filled in torque Table no-2		
8.	Actuator Shut-off Pressure	:	As per the Table-1
9.	**Process Conditions**		
	Power Gas	:	Natural Gas
	Gas Temperature	:	As per Table-1
	Line Gas Pressure	:	As per Table-1
	Molecular Weight	:	As per Attached Sheet
	Cp/Cv	:	As per Attached Sheet
	Compressibility Factor	:	As per Attached Sheet
10.	Valve Position Limit Switch	:	Required (DPDT contact for open and DPDT

			Contact for close position separately)
11.	Electrical conduit connection (cable entries to limit switch box for purchaser's cable)	:	Required
12. a)	Enclosure for Actuator	:	Certified weatherproof as per IP-65
b)	Electrical items	:	Certified weatherproof to IP65 & Explosion proof certified for Zone-1, Gr IIA/B T3
13.	Area Classification	:	Zone-1, Gr IIA/B T3
14.	Material of construction for all tubing, Valves, piping and fittings etc.	:	SS 316
15.	Make & Model No. of Actuator	:	By Vendor
16.	Accessories Required	:	Required as per Specification

TABLE-1

ITEM : MANUAL OPERATED HYDRAULIC VALVE ACTUATORS

Sl. no	Tag No.	Size/ Class	Type of Valve	Line No.	Gas Temp (°C)		Line Gas Pressure (kg/cm^2g)		Delta P Shut Off (kg/cm^2g)	Location
					Min	Max	Min	Max		
		*	*	-	-29	65	25	85	92	

*As per MR.

TABLE-2

ITEM : MANUAL OPERATED HYDRAULIC VALVE ACTUATORS

Sl. No.	Tag No.	Data from Ball Valve Vendor for			Ball Valve Torque Figure with a safety Factor of 1.25		Actuator Generated Torque considering Note-3 (Note-1)		Model Selected
		Break Torque (Nm)	Running Torque (Nm)	Max Allowable Valve Stem Torque (Nm)	Break Torque (Nm)	Running Torque (Nm)	Break Torque (Nm)	Running Torque (Nm)	
1.0	As per MR.								
2.0									
3.0									

NOTE :

1. THESE FIGURES SHALL BE USED AS BASIS FOR TESTING THE ACTUATOR PERFORMANCE DURING FACTORY TESTING THE ACTUATOR ACCEPTANCE WOULD BE CARRIED OUT AFTER VERIFYING SUCCESSFUL TESTING COMPLETE BALL VALVE WITH ACTUATOR ASSEMBLY.
2. ALL TORQUE FIGURES MUST BE IN Nm.
3. Pipeline operating pressure range 25 to 85 kg/sq.cm(g).

SCRAPPER TRAP & BLOWDOWN QOEC

STANDARD TECHNICAL SPECIFICATION FOR SCRAPER TRAP

SPECIFICATION NO. : MEC/TS/05/28/007

(OIL & GAS SBU)
MECON LIMITED
DELHI 110 092

PREPARED BY:	CHECKED BY:	APPROVED BY:	ISSUE DATE :
(BB)	(AKJ)	(RKN)	SEPT. ,2014

MECON LIMITED REGD. OFF. RANCHI 834002	STANDARD TECHNICAL SPECIFICATION OIL & GAS SBU, DELHI		
TITLE	**SCRAPER TRAP**	DOCUMENT NO. **MEC/TS/05/28/007**	Page 1 of 14 REVISION : 0 EDITION : 0

AMENDMENT STATUS

Sl. No.	Clause / Paragraph / Annexure / Exhibit / Drawing Amended	Page No.	Edition	Rev.	Date	By		Checked		Approved	
						Name	Sig.	Name	Sig.	Name	Sig
1	Overall Revision & Tech Spec./Doc No. Changed as MEC/TS/05/28/007 in place of previous Tech Spec. No. MEC/S/05/62/007, Rev -1	All	C	0	Sept 2014	BB		AKJ		RKN	

Abbreviations:

ASME	:	American Society of Mechanical Engineers
ASTM	:	American Society for Testing and Materials
API	:	American Petroleum Institute
DN	:	Nominal Size
HAZ	:	Heat Affected Zone
MSS-SP	:	Manufacturers Standardization Society – Standard Practice
NDT	:	Non Destructive Testing
NPS	:	Nominal Pipe Size
SSPC	:	Steel Structures Painting Council

CONTENTS

Sl.No.	Description
1.0	SCOPE
2.0	REFERENCE DOCUMENTS
3.0	MATERIALS
4.0	DESIGN AND CONSTRUCTION
5.0	INSPECTION AND TESTS
6.0	TEST CERTIFICATES
7.0	PAINTING, MARKING AND SHIPMENT
8.0	GUARANTEE
9.0	SPARES
10.0	DOCUMENTATION

1.0 SCOPE

This specification covers the basic requirements for design, manufacture, inspection, testing & supply of Scraper Launching & Receiving Traps or bi-directional Scraper Traps to be installed in pipeline system transporting non-sour hydrocarbons in liquid or gaseous phase including Liquefied Petroleum Gas (LPG). This specification does not cover scraper launching & receiving trap for sour hydrocarbons (liquid/ gas) services as defined in NACE Std. MR-01-75.

2.0 REFERENCE DOCUMENTS

2.1 Reference has also been made in this specification to the latest edition of the following codes, standards and specifications:

a)	ASME B 31.4	:	Pipeline Transportation System for Liquid Hydrocarbons and Other Liquids
b)	ASME B 31.8	:	Gas Transmission and Distribution Piping System
c)	ASME B 16.5	:	Steel Pipe Flanges and Flanges Fittings
d)	ASME B16.9	:	Factory made Wrought Steel Butt Welding Fittings
e)	ASME B 16.11	:	Forged Steel Fittings, Socket-Welding and Threaded
f)	ASME B 16.25	:	Butt-Welding Ends
g)	ASTM A370	:	Mechanical testing of steel products
h)	ASME Sec-VIII and IX	:	Boiler and Pressure Vessels Codes.
i)	API 1104	:	Specification for Welding Pipeline and Related Facilities
j)	MSS-SP-44	:	Specification for High Test Wrought Welding Fittings.

k) MSS-SP-75 : Specification for High Test Wrought Welding Fittings

l) MSS-SP-97 : Integrally Reinforced Forged Branch Outlet Fittings Socket Welding Threaded and Butt Welding Ends

m) SSPC-VIS-1 : Steel Structure Painting Council

In case of conflict between the requirements of this specification and the requirements of above referred documents, the requirements of this specification shall govern.

3.0 MATERIALS

3.1 Materials and thicknesses of main components used in manufacture of traps shall be indicated by Manufacturer and shall be suitable for service conditions indicated in the data sheets and annexures. These shall be subject to approval by Purchaser. The steel used shall have a minimum SMYS of 35,000 psi.

3.2 Fully killed carbon steel shall be used.

3.3 Material of the ends to be field welded by purchaser shall have carbon equivalent less than or equal to 0.45 based on check analysis, for each heat of steel, calculated according to the following formula.

$$CE = C + \frac{Mn}{6} + \frac{Cr + Mo + V}{5} + \frac{Ni + Cu}{15}$$

3.4 For Scraper Traps, specified to be used for Gas service or High Vapour Pressure (HVP) liquid service, Charpy V-notch test shall be conducted at 0°C for each heat of steel used in the manufacture of pressure containing parts of the traps. Test procedure shall conform to ASTM A-370. The Charpy V-notch test specimens shall be taken in the direction of principal grain flow and notched perpendicular to the original surface of the plate or forging. The minimum average absorbed impact energy values of three full sized specimens shall be as under, unless otherwise indicated in the Data sheets:-

Diameter (inches)	Base Metal (Joules)	Weld Metal and HAZ (Joules)
For all size	27	27

The minimum impact energy value of any one specimen of the three specimens analyzed as above, shall not be less than 80% of the above mentioned average values.

For scraper Traps, specified to be used for other hydrocarbon service, the Charpy V-notch test requirements as stated above are not applicable. When Low Temperature Carbon Steel (LTCS) materials are specified in data sheets or offered by Manufacturer, the Charpy V-notch test requirements of applicable material standard shall be complied with.

3.5 For Scraper Traps, specified to be used for Gas service or High Vapour Pressure (HVP) liquid service, hardness test shall be carried out as per ASTM A370 for each heat of steel used. A full thickness cross section shall be taken for this purpose and the maximum hardness of the base material, weld metal and heat affected zone (HAZ) of all the pressure containing parts shall not exceed 248 HV_{10}. The maximum difference in hardness of Base metal, Weld metal and Heat affected zone (HAZ) of pressure containing parts of the traps shall be less than 80 points Vicker's HV_{10}.

For scraper Traps, specified to be used for other hydrocarbon service, the hardness test requirements as stated above are not applicable. When Low Temperature Carbon Steel (LTCS) materials are specified in data sheets or offered by Manufacturer, the hardness test requirements of applicable material standard shall be complied with.

4.0 DESIGN AND CONSTRUCTION

4.1 The cylindrical portion of the trap shall be designed as per design code and design factor indicated in the data sheets. Quick end closure shall be designed as per sec. ASME Sec. VIII, Div. 1 for design conditions indicated in data sheets. A corrosion allowance of 3 mm shall be considered in design of the traps. Quality of welding shall be such that weld efficiency factor of 1.0 is achieved.

4.2 The trap shall be capable of handling latest instrumented pigs, model like Linalog 360 of AMF Tuboscope or British gas magnetic inspection vehicle or equivalent and

scraper / cleaning / gauging / batching pigs and shall conform to the minimum dimensions given in scraper Trap data sheets. Dimensions not shown specifically in the data sheet shall be as per manufacturer's standard and shall be subject to approval by Purchaser / Purchaser's representative.

4.3 The trap body and neck, diameter has been indicated in the data sheet. Trap length to suit the purpose and thickness to meet the class rating shall be suggested by the manufacturer and approved by the purchaser. Circumferential weld on scraper trap body and neck are not permitted.

4.4 Concentric or eccentric reducer, as indicated in data sheets, used in the manufacture of traps shall be seamless types for sizes up to and including 14"NB and welded type for sizes 16"NB and above. Reducers of size up to & including 14"NB shall conform to ASME B 16.9 and size 16"NB and above shall conform to MSS-SP-75. Thickness of reducer shall match with the adjoining body/neck thickness.

4.5 Vents and drains shall be provided on each trap. The trap shall be provided with a suitable slope and the drain location shall be such that complete drainage of the trap is possible. Sizes for vent and drain shall be as indicated in data sheet.

4.6 All branch connections shall be made by weldolets/ nippolet or by extrusions as indicated in the data sheet. All weldolets shall confirm to MSS-SP-97 and nippolets shall be manufacturer's standard. The extruded opening shall be adequately heat treated and stress relieved. Stub-in or pipe-to-pipe connection shall not be used for making branch connection

4.7 End connections of traps shall be flanged or butt welded as indicated in data sheet.

a) Flanged ends, if specified shall have dimension as per ASME B16.5 for sizes upto 24" NB (excluding 22 NB) and as per ASME B16.47 / MSS-SP-44 for sizes 22 NB and 26 NB and above. Flanges shall be as indicated in data sheets.

b) Butt weld ends if specified shall have ends prepared as per ASME B16.25. However, end preparation for butt welding ends having unequal thicknesses with respect, to connecting pipe shall be as per ASME B31.4/ ASME B31.8 as applicable.

c) The location & orientation of all nozzle connections shall be submitted for purchaser's approval before manufacturing.

4.8 The quick opening end closure shall be of clamp ring or band lock type or equivalent design. The closure shall also consist of a safety relief system allowing the opening only when there is no pressure in the trap. Screwed type or plug-in types of end closures are not acceptable. End closure shall be hand operated by a single lever operation and operable by one operator. End closures of size 24" and above shall be fitted with worm gear operator for the opening of the closure.

Hinge of the closure shall be so designed that the weight of the end closure is fully supported with out sagging.

4.9 Receiving traps shall be provided with a pig indicator in the middle of the neck and the indicator shall conform to the specification issued for the purpose. Pig indicator shall be suitable for bi-directional operation and shall have visual flag and manual reset. The same shall also have provision for remote indication. Refer Pig Signaler Specification and Pig Signaler Data Sheet.

4.10 Suitable handling system for inserting and retracting the scraper and instrumented pigs from the trap shall be provided with each trap with complete handling device. Handling system shall consist of a fabricated structural steel framework comprising a bench fitted with a purpose-designed cradle for the pig. A pusher/ puller mechanism operated by a cable system employing a hand cranked winch shall be mounted on the bench framework for inserting/ retracting the pig from the trap. The bench frame should be suitable for bolting to the floor. All parts of the handling system in contact with each other shall be of the anti-spark type. In case of any rails are required for sliding of the handling system, the same shall be provided by the scraper trap manufacturer.

4.11 Fabricated steel supports, minimum two numbers at suitable spacing shall be provided with traps for mounting on concrete blocks. These supports will not be subjected to pipeline anchorage forces. The material of support shall be compatible with trap material for welding purposes. All welds shall be examined by magnetic particle method.

4.12 Completed assembly shall be stress relieved as per the provisions of the design codes.

4.13 All welds shall be made by welders and welding procedures qualified in accordance with the provisions of ASME Sec. IX. The procedure qualification shall include impact test and hardness test when required as per clause 3.4 & 3.5 of this specification and shall meet the requirements as specified therein.

4.14 Repair by welding on parent metal is not allowed. Repair of welds shall be carried out only after specific approval by purchaser's representative for each repair. The repair welding shall be carried out by the welders and welding procedures duly qualified as per ASME Section IX and records for each repair shall be maintained. The repair welding procedure qualification shall include impact test and hardness test when required as per clause 3.4 & 3.5 of this specification and shall meet the requirements as specified therein.

4.15 The Pig receiving traps / Bi-directional traps shall be equipped with a half internal removable filtering basket consisting of a punched plate with a least five rows of drain holes.

4.16 The filtering basket shall be provided with suitable stops. Lock bracket shall be provided in such a manner that the filtering basket does not slide within the trap. Rear end of the basket shall be fitted with suitable lug to enable retrieval of the basket by hooks.

4.16 The filtering basket shall slide on guides on wheels and in all cases the material of the parts being in contact with each other shall be of the anti spark type.

4.17 The tolerance on internal diameter and out of roundness at the ends for the welding end of the neck (at the end where connecting pipeline will be welded or joined by flange) shall be as per applicable connected pipe specification as indicated in the data sheet.

5.0 INSPECTION AND TESTS

5.1 The manufacturer shall perform all inspections and test as per the requirements of this specification and the relevant codes prior to shipment at his works. Such inspections and tests shall be, but not limited to the following:-

5.1.1 All trap shall be visually inspected. The internal and external surfaces of the scraper traps shall be free from any strikes, gouges and other detrimental effects.

5.1.2 Chemical composition and mechanical properties including hardness shall be checked for each heat of steel used.

5.1.3 Dimensional check shall be carried out as per the approved drawings.

5.1.4 Hydrostatic test shall be conducted for all scraper traps complete in all respects including mounting of pig indicators at a pressure equal to 1.25/1.4 times the

design pressure for liquid/gas service respectively as indicated in data sheet. The test pressure shall be held for a minimum period of one hour.

5.1.5 All butt welds shall be 100% radiographically inspected. Procedure and acceptance criteria shall be as per API 1104.

5.1.6 Ultrasonic or magnetic particle inspection shall be carried out on all welds which in Purchaser's Representative's opinion can not be radiographically inspected. Procedure and acceptance criteria shall be as per ASME Sec. VIII, Appendix-U and VI respectively.

5.1.7 All finished wrought weld shall be 100% ultrasonically inspected for lamination type defects for a distance of 50mm from the end. Any lamination larger than 6.35 mm shall not be acceptable.

5.1.8 All forgings shall be wet magnetic particle examined on 100% of the forged surfaces. Method and acceptance shall comply with MSS-SP-53.

5.1.9 A minimum of two closing and opening cycles shall be performed and correct operation of both quick opening closure and safety system shall be ascertained.

5.2 Purchaser's Representative reserves the right to perform stage wise inspection and witness tests including hydrostatic test, as indicated in specification at manufacturer's works prior to shipment. Manufacturer shall give reasonable notice of time & shall provide without charge reasonable access and facilities required for inspection, to the Purchaser's representative.

Inspection and tests performed / witnessed by Purchaser's Representative shall in no way relieve the Manufacturer's obligation of specific integrity of the scraper trap System.

Manufacturer's equipment shall be subject to examination and approval by Purchaser to ensure proper fabrication and testing of Scraper Trap System.

6.0 TEST CERTIFICATES

Manufacturer shall furnish the following certificates

a) Test certificates relevant to the chemical and Mechanical properties including Hardness of the materials used for manufacture of trap as per relevant standards and this specification.

b) Hydrostatic test certificates.

c) Test reports on radiography, ultrasonic inspection and magnetic particle examination.

d) Test reports on heat treatment carried out, if any.

e) Welding procedure and welders qualification reports

The certificate shall be considered valid only when signed by Purchaser's representative.

7.0 PAINTING, MARKING AND SHIPMENT

7.1 After all inspection and test required have been carried out, all external surfaces shall be thoroughly cleaned to remove grease, dust and rust. Surface preparation shall be carried out by shot blasting to SP-6 in accordance with "Steel Structures Painting Council Visual Standard - SSPC-VIS-1". Machined parts shall be coated with anti-rust removable paint and non machined parts shall be applied with two coats of protective paint. Manufactures shall indicate the type of paint used in the drawings submitted for approval.

7.2 Marking shall be done on a stainless steel plate and affixed to the body by means of corrosion resistant fasteners. Marking shall include the following:-

a) Manufacturer's Name
b) Trap/ Neck Diameter, Thickness
c) Material
d) ASME Class Rating
e) Tag Number
f) Design Pressure
g) Design Temperature
h) Test Pressure
i) Design Factor
j) Year of Manufacture
k) Empty weight of the trap assembly.

7.3 Before shipment, traps shall be properly packed against damage during transportation. All machined surface subject to corrosion during transit shall be

well protected by coat of grease or other suitable material. All traps shall be provided with suitable protectors, for flange faces, securely attached to the traps. Bevel ends shall be protected with metallic or high impact plastic bevel protectors.

7.4 Only those traps, which have been inspected and certified by the purchaser's inspector shall be supplied.

8.0 GUARANTEE

8.1 Manufacturer shall guarantee that the trap alongwith accessories is in compliance with the requirements of this specification for materials and workmanship. Manufacturer shall replace or repair all parts which should result defective due to inadequate design or the workmanship. In case the defect can not be eliminated, Manufacturer shall replace the trap without any delay. Any defect occurring within the time period specified elsewhere shall be repaired making all necessary modifications and repair of defective parts free of charge to the purchaser.

9.0 SPARES

9.1 Manufacturer shall furnish list of recommended spares and accessories for Scraper Traps required during start up and commissioning. As a minimum, the commissioning spares shall include 200% extra consumable spares viz. gaskets/ o-rings/ seals etc. for each trap. Cost of such spares shall be included by the Manufacturer in the item rates indicated in Purchase Requisition.

9.2 Manufacturer shall furnish separately a list of recommended spares and accessories required for two years of normal operation and maintenance of Scraper Traps.

10.0 DOCUMENTATION

10.1 Manufacturer shall furnish at the time of bidding, the following documents:-

a) General arrangement drawing of scraper trap, pig signallers, quick opening end closure with overall dimensions.

b) Clause wise list of deviations from this specification, if any listed at one place in the document.

c) Reference list of similar supplies for the past five years including project, client year of supply & contact person.

d) Quality Assurance Plan (QAP) enclosed with this tender duly signed, stamped and accepted.

10.2 Within two weeks of placement of order, the manufacturer shall submit four copies of, but not limited to, the following drawings, documents and specifications for approval.

a) Calculations according to the relevant codes for the body including branch connections and quick end closures.

b) Trap assembly and sectional drawings showing all parts with materials and dimensions.

c) Support Assembly Drawing.

d) Arrangement & details of foundation bolts for pig handling and lifting system, where applicable.

e) Welding procedure and method of manufacture.

Once the above said documents have been approved by the Purchaser, any changes in design, material and method of manufacturer shall be notified to the Purchaser, whose approval in writing of all changes shall be obtained before the traps are manufactured.

10.3 Within four weeks from the approval date Manufacturer shall submit one reproducible and six copies of all approved drawings, documents and specification as listed in clause 10.2 of this specification.

10.4 Prior to shipment, the manufacturer shall submit one reproducible and six copies of the following:

a) Test certificate as listed in clause 6.0 of this specification.

b) Manual for Installation, erection instructions, maintenance and operations instruction for Scraper trap System.

10.5 All documents shall be in English Language.

LIST OF COMMISSIONING SPARES AND ACCESSORIES FOR START-UP & COMMISSIONING FOR SCRAPPER TRAPS, QOEC, PIG SIGNALLERS

Sl. No.	Item No.	Description	Quantity
1.			
2.			
3.			
4.			
5.			

NOTES:

1. Vendor to indicate in the table above the start-up and commissioning spares required for Scrapper Traps, QOC, Pig Signalers, other than those already mentioned in Material Requisition.

2. Vendor to include the cost of above start-up and commissioning spares for Scrapper Traps & Pig Signalers in the quoted price for Scrapper Traps, QOC, Pig Signalers.

LIST OF SPARES AND ACCESSORIES FOR TWO YEARS OF NORMAL OPERATION FOR FOR SCRAPPER TRAPS, PIG SIGNALLERS and QOEC

Sl. No.	Item No.	Description	Quantity	Unit Price (Ex-works)	Total Price (Ex-works)
1.					
2.					
3.					
4.					

NOTE:

Vendor to indicate in the table above, the spares & accessories for two years normal operation for scraper traps, pig signallers & QOECs as per price schedule Format / Performa.

Edition : 1

SPECIFICATION

FOR

QUICK OPENING END CLOSURE

SPECIFICATION NO.: MEC/TS/05/21/013

(OIL & GAS SBU)
MECON LIMITED
DELHI 110 092

CONTENTS

Sl.No.	Description
1.0	SCOPE
2.0	REFERENCE DOCUMENTS
3.0	MATERIALS
4.0	DESIGN AND CONSTRUCTION
5.0	INSPECTION AND TESTS
6.0	TEST CERTIFICATES
7.0	PAINTING, MARKING AND SHIPMENT
8.0	GUARANTEE
9.0	SPARES
10.0	DOCUMENTATION

1.0 SCOPE

This specification covers the minimum requirements for design and manufacture of quick opening end closures to be installed at various blow-down points of the pipeline handling Natural Gas. This specification does not cover quick opening end closures for sour hydrocarbons service as defined in NACE standard MR0175-98.

2.0 REFERENCE DOCUMENTS

Reference has been made in this specification to the latest edition of the following codes, standards and specification :

a) ANSI B 31.8 : Gas Transmission and Distribution Piping Systems

b) ANSI B 16.25 : Butt - Welding Ends

c) ASME Sec. VIII : Boiler and Pressure Vessels Code Rules for the Construction of Pressure vessels

d) ASME Sec. IX : Qualification standard for Welding and Brazing procedures, welders, brazers and welding and brazing operators.

e) API 6H : Specification on End closures, Connectors and Swivels

f) API 1104 : Specification for Welding Pipeline and Related Facilities

g) SSPC-VIS-1 : Steel Structures Painting Council

2.2 In case of conflict between the requirements of this specification and any code, Standard and Specification referred in Clause 2.1 above. Order of precedence shall be as follows :

- Data Sheets
- This Specification
- Other Referred Codes & Standards
- Manufacturer's Standard.

3.0 MATERIALS

3.1 Material used in the manufacture of pressure containing parts of quick opening end-closure shall be fully killed carbon steel, forged construction. In addition, the material shall also meet the requirements specified herein.

The minimum SMYS of the material of pressure containing part of the closure shall be 35,000 psi. Other components shall be as per Manufacturer's Standard. However, all the materials used shall be suitable for the service conditions indicated in Annexure-I, which will be subject to approval by Purchaser.

3.2 Material of the ends to be field welded by Purchaser shall have carbon equivalent not more than 0.45 based on check analysis, for each heat of steel used, calculated as per the following formula:

$$CE = C + \frac{Mn}{6} + \frac{Cr + Mo + V}{5} + \frac{Ni + Cu}{15}$$

3.3 Unless specified otherwise, Charpy V-notch test shall be conducted for each heat of steel, in accordance with the impact test provisions of ASTM A 370 at temperature of $0^{o}C$. The average absorbed impact energy values of three full-sized specimens shall be 27 joules.

The minimum impact energy value of any one specimen of the three specimens analysed as above, shall not be less than 80% of the above mentioned average values.

3.4 Hardness test shall be carried out as per ASTM A 370 for each heat of steel used. A full thickness cross section shall be taken for this purpose and the maximum hardness of base metal, weld metal and HAZ of all pressure containing parts shall not exceed 248 $HV_{10.}$

4.0 DESIGN AND CONSTRUCTION

4.1 End closure shall be designed in accordance with the provisions of ANSI B 31.8 and ASME Sec. VIII Division 1. Corrosion allowance and design factor as indicated in the data sheets shall be considered in the design of end closure.

4.2 Diameter, thickness, material, ANSI Rating of the pipeline with which the end closure to be welded is indicated in the Data Sheets. End closure supplied shall be suitable for the same.

4.3 End closure shall be of clamp ring, band lock or equivalent type and operable by a single lever operation. The threaded closures are not acceptable.

4.4 End closure shall be of hinged and quick opening type and shall consist of a safety system allowing the opening only when there is no pressure in the line.

4.5 End closure shall be suitable for installation in vertical position at an elevation of 2.0 meters above ground level. The safety system and the lever for operating the closure shall be at a convenient position so that easy access is possible for operator from ground without usage of any structure or platform.

4.6 When closed, the closure shall provide a positive seal without any leakage. Gaskets or seals when provided for this purpose shall be self sealing and suitable for the service condition indicated in Annexure-I & Data Sheets.

4.7 For vertical installation, a suitable lifting device shall be provided to hinge the closure plug, head or door, clear for vertical access into the opened closure. The lever of the closure shall be provided in vertical plane so that vertical up and down operation is achievable.

4.8 The handling device shall be attached to the welding end hub, which shall be suitable for such attachment.

4.9 End closure shall be provided with a butt-welding end for direct welding with the pipeline. The weld end shall be prepared in accordance with ANSI B31.8.

4.10 All welds shall be made by welders and welding procedures qualified in accordance with the provisions of ASME Sec. IX. The procedure qualification shall also include impact test and hardness test when required as per clause 3.3 and 3.4 of this specification and shall meet the requirements as specified therein.

4.11 Completed assembly shall be stress relieved as per the provisions of the design codes.

4.12 The tolerance on internal diameter end out of roundness shall be as per connected pipe specifications indicated in the Data Sheet.

5.0 INSPECTION AND TESTS

5.1 Manufacturer shall perform all inspection and tests as per the requirements of this specification and the relevant codes, prior to shipment at his works. Such inspection shall be, but not limited to the following:

5.1.1 All closures shall be visually inspected.

5.1.2 Chemical composition and mechanical properties shall be checked.

5.1.3 Dimensional check shall be carried out as per the approved drawings.

5.1.4 Hydrostatic test shall be conducted for all end closures complete in all respects, at a pressure equal to 1.5 times the design pressure. Test duration shall be as 15 minutes. No leakage is allowed.

5.1.5 All butt welds shall be 100% radiographically inspected. Procedure and acceptance criteria shall be as per API 1104.

5.1.6 Welds, which cannot be radiographically inspected, shall be inspected by ultrasonic or magnetic particle methods. Procedure and acceptance criteria shall be as per ASME Sec. VIII, Appendix `U' and Appendix-VI respectively.

5.1.7 All finished wrought weld ends shall be ultrasonically inspected for lamination type

defects for a distance of 50mm from the end. Any lamination larger than 6.35mm shall not be accepted.

5.1.8 A minimum of two closing and opening cycles shall be performed and correct operation of both quick opening and safety system shall be established.

5.2 Purchaser's Representative reserves the right to perform inspection and witness tests including hydrostatic test, as indicated in para 5.1 at manufacturer's works prior to shipment. Manufacturer shall give reasonable notice of time and shall provide without charge reasonable access and facilities required for inspection, to the Purchaser's Representative.

Inspection and tests performed/ witnessed by Purchaser's Representative shall in no way relieve the Manufacturer's obligation to perform the required inspection and tests.

6.0 TEST CERTIFICATES

Manufacturer shall furnish the following certificates:

a) Test certificates relevant to chemical and mechanical properties of the material used as per the relevant standards.
b) Hydrostatic test certificates.
c) Report on Non-Destructive examination.
d) Certificate of satisfactory performance of end closure as per clause 5.1.8.
e) Certificates of stress relieving.

The certificates shall be considered valid only when signed by the Purchaser's inspector.

7.0 PAINTING, MARKING AND SHIPMENT

7.1 After all inspection and tests required have been carried out, all external surfaces shall be thoroughly cleaned to remove grease, dust and rust. Surface preparation shall be carried out by shot blasting to SP-6 in accordance with "Steel Structures Painting Council - Visual Standard - SSPC-VIS-1". Machined parts shall be coated with anti-rust removable paint and non-machined parts shall be applied with two coats of protective paint. Manufacturer shall indicate the type of paints used in the drawings submitted for approval.

7.2 Marking shall be done on a stainless steel plate and affixed to the body permanently. Marking shall include the following :-

a) Manufacturer's Name
b) Suitable for _____ dia. X_____ Thick Pipeline.
c) ANSI Rating
d) Tag Number
e) Year of Manufacturer

7.3 Before shipment, closures shall be properly packed against damage during transportation. Bevel ends shall be protected with metallic & high impact plastic bevel protectors.

7.4 Only those closures, which have been inspected and certified by Purchaser's Representative, shall be shipped.

8.0 **GUARANTEE**

8.1 Manufacturer shall guarantee that the closure alongwith the davits is in compliance with the requirements of this specification for material and workmanship. Manufacturer shall replace or repair all parts which should result defective due to inadequate engineering of quality of material or workmanship. In case the defect cannot be eliminated, Manufacturer shall replace the closure without any delay. Any defects occurring within the time period specified elsewhere shall be required making all necessary modifications and repair of defective parts free of charge ot the purchaser.

9.0 **SPARES**

9.1 Manufacturer shall furnish list of recommended spares and accessories for Quick Opening End Closures required during start up and commissioning. Cost of such spares shall be included by the Manufacturer in the item rates indicated in Purchase Requisition.

9.2 Manufacturer shall furnish separately a list of recommended spares and accessories required for two years of normal operation and maintenance of Quick Opening End Closures.

10.0 **DOCUMENTATION**

10.1 Manufacturer shall furnish at the time of bidding, the following documents:-

a) General Arrangement Drawings of end closure with over all dimensions and showing the operational arrangement.

b) Clause wise list of deviation from this specification, if any listed at one place in the document.

c) Reference list of similar supplies for the past five years including project, client, year of supply & contact person.

d) Descriptive technical catalogues of the manufacturer.

e) Quality Assurance Plan (QAP) enclosed with this tender duly signed, stamped and accepted.

10.2 Within two weeks of placement of order, the manufacturer shall submit four copies of, but not limited to, the following drawings, documents and specifications for approval :-

a) Calculations according to relevant codes for the end closure.

b) Closure assembly and sectional drawing showing all parts with materials and dimensions.

c) Welding procedure and method of manufacture.

Once the above said documents have been approved by the Purchaser, any change in design, material and method of manufacture shall be notified to the Purchaser, whose approval in writing of all changes shall be obtained before the closures are manufactured.

10.3 Within four weeks from the approval date, Manufacturer shall submit one reproducible and six copies of Approved drawings, documents and specifications listed in clause 10.2 of this specification.

10.4 Prior to shipment, the Manufacturer shall submit one reproducible and six copies of the following :-

a) Test certificates as listed in clause 6.0 of this specification.

b) Manual for installation, erection instructions, maintenance and operation instructions.

10.5 All documents shall be in English Language only.

PROCESS & PIPING DESIGN SECTION
MECON LIMITED
DELHI – 110 092

TECHNICAL SPECIFICATION
FOR
PRESSURE SAFETY VALVES

SPECIFICATION NO. : MEC/TS/05/62/056, Rev-1

CONTENTS

Sl.No.	Description	Page No.
1.0	GENERAL	2
2.0	VALVE SIZING	5
3.0	VALVE CONSTRUCTION	5
4.0	NAMEPLATE	7
5.0	INSPECTION & TESTING	7
6.0	SHIPPING	9
7.0	GUARANTEE	9
8.0	REJECTION	9

1.0 **GENERAL**

1.1 **Scope**

1.1.1 This specification together with the attached data sheets covers the requirements for the design, materials, nameplate marking, testing and shipping of pressure safety valves.

1.1.2 The related standards referred to herein and mentioned below shall be of the latest editions prior to the date of the Purchaser's enquiry :

ASME B 1.20.1	:	Pipe threads
ASME B 16.5	:	Pipe flanges and flanged fittings
ASME B 16.20	:	Ring joint gaskets and grooves for steel pipe flanges
ASME Sec.VIII	:	Boiler & pressure vessels codes for unfired pressure vessel
API RP 520 (Part-I & II)	:	Sizing, selection and installation of pressure relieving devices in refineries
API RP 521	:	Guide for pressure relieving and depressurising systems
API 526	:	Flanged steel safety-relief valves
API 527	:	Commercial seat tightness of refineries relief valve with metal to metal seats
DIN 50049	:	Document on material testing
IBR	:	Indian boiler regulations

1.1.3 In the event of any conflict between this specification, data sheets, related standards, codes etc, the Vendor should refer the matter to the Purchaser for clarifications and only after obtaining the same, should proceed with the manufacture of the items in question.

1.1.4 Purchaser's data sheets indicate the selected valve's relieving area, materials for the body, bonnet, disc, nozzle, spring, indicative inlet/outlet connection sizes, bellows etc. However, this does not relieve the Vendor of the responsibility for proper selection with respect to the following :

a) Sizing calculations and selection of valve with proper relieving area to meet the operating conditions indicated.
b) Selection of materials for all parts of the valve suitable for the fluid and its conditions indicated.

1.1.5 All process-wetted parts, metallic and non-metallic, shall be suitable for the fluids and service specified by the Purchaser. The service gas composition shall be as given in Annexure-I.

1.2 **Bids**

1.2.1 Vendor's quotation shall include a detailed specification sheet for each pressure safety valve which shall provide all the details regarding type, construction materials, relieving area, relieving capacity, orifice letter designation, overpressure, blowdown, operating pressure, etc., and any other valve accessories.

1.2.2 All the units of measurement for various items in the Vendor's specification sheets shall be to the same standards as those in Purchaser's data sheets.

1.2.3 All the material specifications for various parts in the Vendor's specification sheets shall be to the same standards as those in Purchaser's data sheets.

1.2.4 Deleted.

1.2.5 Vendor shall enclose catalogues giving detailed technical specifications and other information for each type of pressure safety valve covered in the bid.

1.2.6 Vendor's quotation, catalogues, drawings, operating and maintenance manual, etc., shall be in English.

1.2.7 Vendor's quotation shall include detailed sizing calculation for each pressure safety valve. Published data for certified discharge coefficient and certified flow capacities and actual discharge area shall be furnished. Data used by Vendor without the above mentioned supported documentation shall, on prima-facie basis, be rejected.

1.2.8 All valves shall have been type tested for capacity as per ASME. A copy of the certificate shall be provided.

1.2.9 Vendor shall also quote separately for the following :

a) Two years recommended operational spares for each pressure relief valve and its accessories. List of such spares without price shall be indicated alongwith technical bid and separately with price.
b) Any specific tools needed for maintenance work.

1.2.10 Vendor's quotation shall include general arrangement and sectional drawings showing all features and major parts with reference numbers and material specification.

IMPORTANT

The drawings to be submitted alongwith the bid shall be in total compliance with the requirement of technical specification and data sheets of the valves with no exception & deviation.

1.2.11 Vendor's quotation shall include Quality Assurance Plan (QAP) enclosed with this tender duly signed, stamped & accepted.

1.3 **Drawings and Data**

1.3.1 Detailed drawings, data, catalogues required from the Vendor are indicated by the Purchaser in this specification. The required number or reproducibles and prints should be dispatched to the address mentioned, adhering to the time limits indicated.

1.3.2 Within two weeks of placement of order, Vendor shall submit six copies of certified drawings and specification sheets for each pressure safety valve for Purchaser's final approval. These documents shall specially include the following :

a) Flange face to face dimension.
b) Height of the complete valve assembly.
c) Weight of the complete valve assembly.
d) Cold bench set pressure for the valve to be tested at atmospheric temperature and back pressure.
e) The cold test medium to be used for bench test in case it is different from air.
f) Horizontal reaction force at center line of valve outlet.
g) Relieving capacity of the valve under the same operating conditions.
h) Over pressure and blowdown/ reclosing pressure for each valve.

1.3.3 Vendor shall provide test certificates for all the tests indicated in clause 5.0 of this specification. In addition Vendor shall provide the Manufacturer's certificate of conformity to Purchaser's specifications as per clause 2.2 of Din 50049.

1.3.4 Within 30 days from the approval date, Manufacturer shall submit to Purchaser one reproducible and six copies of the approved drawings, documents and specifications as listed in clause 1.3.2 above.

1.3.5 Prior to shipment, Manufacturer shall submit one reproducible and six copies of the following:

a) Test certificates for all the tests indicated in clause 5.0 of this specification.
b) Manual for installation, erection, maintenance and operation instructions, including a list of recommended spares for the valves.

2.0 VALVE SIZING

2.1 Sizing shall be carried out using the formulae mentioned in the following standards, whenever the sizing code mentioned in the Purchaser's data sheets refers to them:

Sizing Code	Standard
API	API RP 520 Part-I
ASME	ASME boiler and pressure vessel code section VIII titled - Unfired pressure vessels
IBR	Indian Boiler Regulations Paragraph – 293

2.2 Discharge co-efficient of Vendor's pressure safety valves shall be minimum 0.975 as per API – 520. However, for valves covered under IBR, regulations of IBR shall govern.

2.3 For flanged pressure safety valves, the orifice letter designation and the corresponding relieving area indicated in the Purchaser's data sheet shall be as per API 526. For a valve of given inlet and outlet sizes and letter designation, relieving area of the valves offered by Vendor shall meet those in API-526, as a minimum.

2.4 The discharge capacity of selected pressure safety valves shall be calculated based on certified ASME capacity curves or by using ASME certified discharge coefficient and actual orifice area. Higher valve size shall be selected in case pressure relief valve discharge capacity is less than the required flow rate.

2.5 The definitions of various terminologies used in Purchaser's data sheets are as per paragraph 3.1 of API RP 520 Part-I.

3.0 VALVE CONSTRUCTION

3.1 Body

3.1.1 Unless otherwise mentioned end connection details shall be as below :-

a) Threaded end connections shall be to NPT as per ASME B 1.20.1.
b) Flanged end connections shall be as per ASME B 16.5.

c) Flanged face finish shall be serrated concentric to paragraphs 6.3.4.1, 6.3.4.2 and 6.3.4.3 of ASME B 16.5. The face finish as specified in data sheets, shall have serrations as follows.

Serrated	:	250 to 500 microinches AARH
125 AARH	:	125 to 200 microinches AARH
63 AARH	:	32 to 63 microinches AARH

3.1.2 For flanged valves, inlet and outlet sizes & ratings and center to flange face dimensions shall be in accordance with API-526. Dimensional tolerances shall be as mentioned therein.

3.1.3 Body drain with a plug shall be provided as a standard feature on every pressure safety valve.

3.2 **Trim**

3.2.1 The term `trim' covers all the parts of the valves exposed to and in contact with the process fluid except for the body and bonnet assembly.

3.2.2 Valves shall in general be of the full nozzle full lift type, unless otherwise specified.

3.2.3 Wherever stelliting of disc and nozzle has been specified, it stands for stelliting of the seat joint and the entire disc contour, unless otherwise mentioned.

3.2.4 Resilient seat/ seal or `O' rings wherever used shall be suitable for pressure and temperature conditions specified.

3.3 **Bonnet and Spring**

3.3.1 All valves shall be provided with a cap over the adjusting bolt.

3.3.2 Lifting lever shall be provided whenever the fluid to be relieved is steam or air.

3.3.3 Valve spring design shall permit an adjustment ± 5% of the set pressure as a minimum.

3.3.4 Carbon Steel spring shall be cadmium/ nickel plated.

3.3.5 The allowable tolerances in set pressures are as below :

± 0.14 kg/cm^2(g) for set pressures upto and including 5 kg/cm^2(g);
±3% for set pressure above 5 kg/cm^2(g).

3.3.6 Bonnet shall be of the enclosed type in general. Open type of bonnet may be used only for non-toxic fluids.

3.4 **Pilot**

3.4.1 Wherever pilot operated valves are specified, pilot shall be non-flowing type and shall be designed fail safe.

3.4.2 All accessories like back flow preventer, pilot filter etc. required for proper operation of pilot operated valves as per indicated service conditions shall be included.

3.4.3 Wherever the body is part of flow path, body material shall be same as trim material, as a minimum.

4.0 **NAMEPLATE**

4.1 Each pressure safety valve shall have a S.S. nameplate attached firmly to it at a visible place, furnishing the following information:

a) Tag number as per Purchaser's data sheets.
b) Manufacturer's serial no. or model no.
c) Manufacturer's name/ trade mark.
d) Nominal flanged size in inches and rating in lbs. for both inlet and outlet.
e) Orifice letter designation.
f) Valve set pressure.
g) Cold bench test set pressure.

Unit of the above pressures shall be marked in the same units as those followed in Purchaser's data sheets.

5.0 **INSPECTION & TESTING**

5.1 Unless otherwise specified, Purchaser reserves the right to test and inspect all the items at the Vendor's works.

5.1.1 Purchaser's Inspector shall perform inspection and witness test on all valves as indicated in the Quality Assurance Plan (QAP) attached with this specification.

5.2 Vendor shall submit the following test certificates and test reports for Purchaser's review:

a) Material test certificate from the foundry (MIL certificate) for each valve body and bonnet castings, nozzle, disc etc.
b) Certificate of radiography / x-ray for valve castings. 100% radiography shall be carried out for all valve castings with body rating of 600# and above. A minimum of two shots shall be taken for all curved portion of the body and bonnet.

c) Hydrostatic test reports for all valve bodies and functional test reports for all valves as per clause 5.3 and 5.4 of this specification.

d) IBR certificate in Form III item 11 and shall be furnished for all safety valves in steam service in addition to Form III C. Form III C shall also be furnished for pressure relief valves in distribution network.

5.3 Hydrostatic Test

5.3.1 Each pressure safety valve body and nozzle shall undergo hydrostatic test as per outlet flange and inlet flange ANSI rating, respectively. However all the safety valves castings covered under IBR shall be tested as per IBR regulations. There shall not be any visible leakage during this test.

5.4 Functional Tests

5.4.1 Assembled valves shall be subjected to functional tests as below :

a) Cold bench set pressure test

Pressure relief valve shall be tested for opening at specified set pressure and also for seat tightness.

b) Seat Leakage test as per API

Whenever the specified set pressure is less than or equal to 70 kg/cm^{2}g, the valve shall meet the seat tightness requirements specified in API RP-527. The maximum permissible leakage rates for conventional and balanced bellow valves against various sizes shall be as specified therein. Whenever the specified set pressure exceeds 70 kg/cm^{2}g, the Vendor shall submit the leakage rates of valves for approval by the Purchaser.

Where bubble tightness has been specified, there shall be no leakage or bubbles of air at the specified percentage of set pressure.

c) Valve lift test

5.5 Witness Inspection

All pressure safety valves shall be offered for pre-despatch inspection for following as a minimum :

a) Physical dimensional checks and workmanship
b) Hydrostatic test as per clause 5.3 of this specification.
c) Functional test on representative samples.
d) Review of all certificate and test reports as indicated in clause 5.2 of this specification.

In the event of tests being not witnessed by Purchaser, the tests shall anyway be completed by the Vendor and documents for same submitted for scrutiny.

6.0 SHIPPING

6.1 Valves shall be supplied as a whole, complete with all the accessories like cap, lifting lever, test gag, etc.

6.2 All threaded and flanged opening shall be suitably protected to prevent entry of foreign material.

7.0 GUARANTEE

7.1 Manufacturer shall guarantee that the materials and machining of valves and fittings comply with the requirements in this specification and in the Purchase Order.

7.2 Manufacturer is bound to replace or repair all valve parts which should result defective due to inadequate engineering or to the quality of materials and machining.

7.3 If valve defect or malfunctioning cannot be eliminated, Manufacturer shall replace the valve without delay,

7.4 Any defect occurring during the period of Guarantee shall be attended to by making all necessary modifications and repair of defective parts free of charge to the Purchaser as per the relevant clause of the bid document.

7.5 All expenses shall be to Manufacturer's account.

8.0 REJECTION

8.1 Vendor shall make his offer in detail with respect to every item of the Purchaser's specifications. Any offer not conforming to this shall be summarily rejected.

Sl. No. 1,2 & 4 mentioned below shall be complied in addition to requirement specified in Cl. 3.0 of T.S. No. MEC/TS/05/21/009, Rev.0 under the heading "Materials"
Sl. No. 2, 3, 5 & 6 mentioned below shall be complied in addition to requirement specified in Cl. 4.0 of T.S. No. MEC/TS/05/21/009, Rev.0 under the heading "Design & Construction"
Sl. No. 7 & 8 mentioned below shall be complied in addition to requirement specified in Cl. 5.0 of T.S. No. MEC/TS/05/21/009, Rev.0 under the heading "Inspection"

I. The insulating material shall be non-hygroscopic and shall be capable of sustaining high compressive stresses. The material shall have good long-term stability, excellent dielectric strength, and thermal properties without cracking, distorting, or a loss of insulating properties. The material shall be flame resistant, and also resistant to hydrocarbons, sulphides, bacteria and the climatic conditions as specified for painting requirements. The spacing ring shall be made of an age-resistant material as per ASTM D709 type IV Group G.10, 11 having a minimum compressive strength of 400Mpa. Manufacturer shall submit calculations for selection of thickness of insulating rings. However, minimum thickness shall be 20mm.

II. Central insulating ring shall be accompanied with a gasket. Sealing Gasket shall be designed such that the joint assembly complies with the mechanical and electrical requirements specified in this specification. Part of Central insulating ring shall be in direct contact of forged rings providing primary insulation. The remaining part of insulating ring shall be encapsulated by seal gasket. The geometrical shape of sealing gasket shall be chosen accordingly. The gasket shall be obtained from moulds and of age resisting rubber material. Only high dielectric characteristics NBR (Nitrile butadiene rubber)/ HNBR or Viton can be used. It shall resist explosive decompression, and shall be suitable for long-term exposure to GAS at the design pressure and temperature. Properties of gasket shall be governed by ASTM D2000. Sealing gasket shall be made in one piece.

III. Sealing Systems with O-rings are not acceptable.

IV. Filling material shall be an adhesive sealant elastomer or a low viscosity, cold curing thermosetting resin. Minimum compressive strength of filling material shall be 150MPa.

V. Post Weld Heat Treatment shall not be carried out on final closure weld.

VI. Recesses and protrusions in the bore of assembly shall not be permitted. Compliance with this requirement shall not be achieved by the use of additional fillers. Central insulating ring should always be in direct contact of process fluid.

VII. Upon successful completion of hydrotest, Insulating joint shall be subjected Fatigue test in a manner described below.

Each Insulating Joint shall be subjected to a minimum of 40 pressure cycles from 10 bars to 85% of hydrostatic test pressure. After cycling, the pressure shall be raised to hydrostatic test pressure and shall be maintained for 30 minutes. No leaks or

unacceptable deformation shall occur during this test. Fatigue and hydrostatic tests shall be carried out in unrestrained conditions.

VIII. The internal and external coatings shall be subjected to holiday detection test during final inspection.

14. The Vendor shall provide services for supervision during erection and commissioning of their supplied equipment. Minimum of Two man-days per MR item no. shall be considered for this purpose. If required, vendor shall depute competent persons from OEM of their respective supplied item during supervision of erection & commissioning to avoid any idling at site. However, if any quality / functionality related issues are reported from the installation site of vendor supplied equipment during erection and commissioning, vendor shall depute competent persons at site for and till satisfactory resolution of the same at vendor's own cost.

Edition : 1

SPECIFICATION
FOR INSULATING
JOINTS

SPECIFICATION NO.: MEC/TS/05/21/009

(OIL & GAS SBU)
MECON LIMITED
DELHI 110 092

CONTENTS

Sl.No.	Description
1.0	SCOPE
2.0	REFERENCE DOCUMENTS
3.0	MATERIALS
4.0	DESIGN & CONSTRUCTION REQUIREMENTS
5.0	INSPECTION AND TESTS
6.0	TEST CERTIFICATES
7.0	PAINTING, MARKING AND SHIPMENT
8.0	GUARANTEE
9.0	DOCUMENTATION

MECON LIMITED REGD. OFF: RANCHI 834002	STANDARD TECHNICAL SPECIFICATION OIL & GAS SBU, DELHI		
TITLE	INSULATING JOINTS	DOCUMENT NO. MEC/TS/05/21/009	Page 1 of 1 REVISION : 0 EDITION : 1

AMENDMENT STATUS

Sl. No.	Clause / Paragraph / Annexure / Exhibit / Drawing Amended	Page No.	Revision	Date	By (Name)	Verified (Name)

1.0 SCOPE

This specification cover the basic requirements for design manufacture, testing and supply of carbon steel insulating joints to be installed in onshore pipeline systems handling hydrocarbons in liquid or gaseous phase including Liquefied Petroleum Gas (LPG).

2.0 REFERENCE DOCUMENTS

2.1 Reference has been made in this specification to the latest edition of, the following Codes, Standards and Specifications.

a)	ASME B 31.8	Gas Transmission & Distribution piping System
b)	ASME B 31.4	Liquid transportation systems for hydrocarbons, LPG, Anhydrous Ammonia and Alcohols
c)	ASME B 16.5	Steel Pipe Flanges & Flanged Fittings
d)	ASTM A 370	Mechanical testing of Steel Product
e)	ANSI B 16.25	Butt Welding Ends
f)	ASME Section	Boiler & pressure Vessel Code viii & ix
g)	API 1104	Standard for welding pipelines and Related facilities.
h)	SSPC-VIS-1	Steel Structures painting Council Visual Standard.
i)	MSS-SP-53	Quality standard for steel castings and forgings for valves flanges and fittings and other piping components - magnetic particle examination method.
j)	MSS-SP-75	Specification for high test wrought welding fittings.
k)	NACE RP 0286	The electrical isolation of cathodically protected pipelines.

2.2 In case of conflict between the requirements of this specification and any code, Standard and Specification referred in Clause 2.1 above. Order of precedence shall be as follows :

- Data Sheets
- This Specification
- Other Referred Codes & Standards
- Manufacturer's Standard.

3.0 MATERIALS

3.1 Material for the pressure containing parts of the insulating joints shall be as indicated in the data sheets. Material for pups shall be equivalent or superior to the material of connecting pipeline which is indicated in the data sheets. Other part shall be as per manufacturer's standard suitable for the service condition indicated in Insulating Joint Data Sheets and shall be subject to approval by purchaser.

All process-wetted parts, metallic & non-metallic shall be suitable for the commissioning fluids & service specified by the purchaser. Manufacturer shall confirm that all wetted parts are suitable for treated water/seawater environment, which may be used during field testing.

3.2 Insulating joints which are subject to field welding by purchaser, shall have carbon equivalent (CE) not exceeding 0.45 based on check analysis for each heat of steel calculated according to the following formula :

$$CE = C + Mn/6 + (Cr+Mo+V)/5 + (Ni+Cu)/15$$

3.3 When specified in the IJ Data Sheet, charpy V-notch test shall be conducted on each heat of base material, weld metal and heat affected zone of all pressure containing parts such as body, welding ends in accordance with the impact test provisions of ASTM A 370 at a temperature of 0° C. The charpy impact test specimens shall be taken in the direction of principal grain flow and notched perpendicular to the original surface of the plate of forging. Average impact energy value of three full sized specimens shall be 27 joules. Minimum impact energy value of any one specimen shall not be less than 80% of the average impact energy specified. No specimen shall exhibit less than 80% shear area.

When Low Temperature Carbon Steel (LCTS) materials are specified in Datasheet or offered by Manufacturer, the Charpy V-notch test requirements of applicable material standard shall be complied with.

3.4 Carbon steel used for the manufacture shall be fully killed

3.5 When specified in data sheet, hardness test shall be carried out as per ASTM A370 for each heat of steel used. The maximum hardness of base metal, weld metal and heat affected zone of all pressure parts shall be 248 HV_{10}, unless specified otherwise.

3.6 Insulation material shall be minimum 20 mm thick and shall comply section 5, NACE RP 0286.

4.0 DESIGN & CONSTRUCTION REQUIREMENTS

4.1 Mechanical

4.1.1 Insulating joints shall be of integral type fabricated by welding and with pups on either

side as shown in data sheet. A corrosion allowance as indicated in data sheet shall be considered in design. Bolted and threaded joints are not acceptable. Insulating Joints of design, not having closing welds, are not acceptable.

4.1.2 All materials used for the manufacture of the insulating joint shall be in accordance with clause 3.0 of this Specification.

4.1.3 Insulating joints shall be designed using the design principles of ASME Section-VIII Div. 1. The design shall be checked for the following two cases:

Case-I : Design Pressure (as per Data Sheet) + Axial Force (F)

The Axial force shall be calculated as under :

$F = 0.1 \times S \times A$

Where

S = SMYS of connected pipe (refer Data Sheet)
A = Metal cross-sectional area of connected pipe.

The allowable stress in this case shall be less than or equal to 0.5 x SMYS of insulating joint material.

Case-II : Hydrostatic Test Pressure

The allowable stress in this case shall be less than or equal to 95% of SMYS of insulating joint material.

All design parameters shall be as per Insulating Joint Data Sheet. Detailed calculations shall be submitted for Purchaser's approval.

4.1.4 Insulating joint design and materials shall be capable of being vacuum tested to 1 millibar.

4.1.5 The joint between pipe pup pieces and main forging shall be full penetration butt weld type. Weld design shall be such as resulting in a weld joint factor of 1.0.

4.1.6 Butt weld ends shall have ends as per ASME B16.25. However, end preparation for butt welding ends having unequal thickness with respect to connecting pipe, shall be as per ASME B31.4/ B31.8 as applicable.

4.1.7 The reinforcement of inside weld seam, in case pups fabricated from LSAW pipes, shall be removed for a distance of at least 50mm from each end.

4.1.8 Insulating joints shall allow free passage of scraper/ instrumented pigs. The internal bore shall be same as that of connecting pipe including its tolerances.

4.1.9 The insulating joint shall be formed by sandwiching and locking in positions the insulating material in a bell and spigot type of joint. The joint shall be assembled in such a way that its various components are firmly locked in position and the completed joint is capable of withstanding stresses due to designed operating conditions and field hydrostatic testing.

4.1.10 Insulating joints shall be suitable for aboveground or underground installations as indicated in the data sheets.

4.1.11 All welds shall be made by welders and welding procedures qualified in accordance with the provisions ASME section IX. The procedure qualification shall include impact test and hardness test and shall meet the requirements of clause 3.3, 3.5 of this specification.

4.1.12 Repair welding on parent metal is not allowed. Repair of welds shall be carried out only after specific approval by purchaser's representative for each repair. The repair welding shall be carried out by welders and welding procedures duly qualified as per ASME section IX and records for each repair shall be maintained. Repair welding procedure qualification shall also include impact test & hardness test when required as per Cl. No. 3.3 & 3.5 of this specification & shall meet the requirements as specified therein.

4.1.13 The Tolerance on Internal diameter at the welding end shall be as per applicable connected pipe specification as indicated in the datasheet.

4.1.14 Out of roundness measured at the root face of the welding ends shall not be more than 0.5% of the specified inside diameter.

4.2 **Electrical**

4.2.1 The average dielectric strength of the insulating joint shall be minimum 15 kilo Volts.

4.2.2 Two cleats as shown in data sheet shall be provided on the pups on either side of the insulating joint for connecting 10 mm^2 and 50 mm^2 cables for measurement/ shorting purposes. Cleats shall be attached to the insulating joint by welding.

5.0 **INSPECTION AND TESTS**

5.1 The manufacturer shall perform all inspection and tests as per the requirements of this specification and the relevant codes, prior to shipment at his works. Such inspection and tests shall be, but not limited to the following:

5.1.1 All insulating joints shall be visually inspected. The internal & external surfaces shall be free from any strikes, gauges & other detrimental & defects. The surfaces shall be thoroughly cleared & free from dirt, rust & scales.

5.1.2 Dimensional checks shall be carried out as per the purchaser approved drawings.

5.1.3 Chemical composition and mechanical properties including hardness shall be checked as per relevant material standards and this specification, for each heat of steel used.

5.1.4 Non-destructive inspection of insulating joints shall be carried out as given below:

a) 100% radiography shall be carried out on all butt & repair welds of pressure containing parts. Acceptance limits shall be as per API 1104.
Welds, which in purchaser's Representative opinion cannot be inspected by radiographic methods, shall be checked by ultrasonic or magnetic particle methods. Acceptance criteria shall be as per ASME Section VIII Appendix-12 and Appendix-6 respectively.

b) All finished weld ends shall be 100% ultrasonically tested for lamination type defects for a distance of 5Omm from the ends. Any lamination larger than 6.35 mm shall not be acceptable.

c) All forgings shall be wet magnetic particle inspected on 100% of forged surfaces. Method and acceptance shall comply MSS-SP-53.

d) All fillet weld of thickness < 6mm shall be examined 100% by magnetic particle inspection and ≥ 6mm shall be examined 100% by UT. Acceptance criteria for MPI & UT shall be as per ASME Sec.VIII Appendix-6 & Appendix-12 respectively.

5.1.5 Insulating joint shall be hydrostatically tested to a pressure as indicated in data sheet. The test duration shall be of 15 minutes.

5.1.6 After the hydrostatic test insulating joints shall be tested with air at 5 kg/cm^2 for 10 minutes. The tightness shall be checked by immersion or with a frothing agent. No leakage will be accepted.

5.1.7 **Dielectric Test**

a) Insulation resistance of each insulating joint shall be atleast 25 mega-ohms when checked with 500-1000 V DC.

b) Insulating joint before and after the hydrostatic test, shall be tested for dielectric integrity for one minute at 5000 V A.C., 50 cycles and the leakage current before and after hydrostatic test shall be equal. Testing time voltage and leakage shall be recorded and certified. No repair shall be permitted to the insulating joints failed in the above-mentioned tests.

5.2 Purchaser reserves the right to perform stage wise inspection and witness test as indicated in Para 5.1 at Manufacturer's works prior to shipment. Manufacturer shall give reasonable notice of time and shall provide without charge reasonable access and facilities required for inspection to the purchaser's Representative.

Inspection and tests performed/witnessed by the Purchaser's Representative shall in no way relieve the Manufacturer's obligation to perform the required inspection and test.

6.0 TEST CERTIFICATES

6.1 Manufacturer shall submit following certificates to Purchaser's Representative.

a) Test certificates relevant to the chemical analysis and mechanical properties including hardness of the materials used for construction of insulating joint as per this specification and relevant standards.
b) Test reports on non-destructive testing.
c) Test certificates for hydrostatic and air tests.
d) Test certificate for electrical test.
e) Test report on vacuum test.

7.0 PAINTING, MARKING AND SHIPMENT.

7.1 Insulating joint surface shall be thoroughly cleaned, freed from rust and grease and applied with sufficient coats of corrosion resistant paint. Surface preparation shall be carried out by shot blasting to SP-6 in accordance with "steel structures painting council - Visual standard SSPC-VIS-I.". External surfaces of burried insulating joints shall be painted with three coats of suitable coal tar epoxy resin with a minimum dry film thickness of 300 microns.

Manufacturer shall indicate the type of corrosion resistant paint used, in the drawings submitted for approval.

7.2 Insulating joints shall be marked with indelible paint with the following data:-

a. Manufacturer's name
b. Suitable for _____inch nominal diameter pipeline
c. End thickness in mm
d. Material
e. Design Pressure/ Hydrostatic Test Pressure
f. ANSI Class Rating
g. Tag No.
h. Year of Manufacture

7.3 Insulating joints shall be suitably protected to avoid any damage during transit. Metallic or high-impact plastic bevel protectors shall be provided to weld ends.

7.4 Only those insulating joints which have been inspected and certified by Purchaser shall be shipped.

8.0 GUARANTEE

8.1 The manufacturer shall guarantee that the materials used comply with the requirements of this specification.

8.2 Manufacturer shall replace or repair insulating joints found defective due to inadequate engineering or quality of material.

8.3 Manufacturer shall replace the insulating joint without delay if the defect or malfunctioning can not be eliminated.

8.4 Any defects occurring within 12 months from the date of installation or within 30 months from the date of despatch, whichever is earlier, shall be repaired making all necessary modifications and repair of defective parts free of charge to the purchaser.

9.0 **DOCUMENTATION**

9.1 All documents shall be in English Language.

9.2 At the time of bidding, Bidder shall submit the following documents:-

a) General arrangement drawing along with cross sectional view, overall dimensions and details of insulating materials recommended.
b) Reference lists of previous supplies of insulating joint of similar specification.
c) Clause wise list of deviation from this specification, if any.

9.3 Within three weeks of placement of order, the Manufacturer shall submit four copies of but not limited to the following drawings, documents and specifications for approval.

a) Fabrication drawings and relevant calculations for pressure containing parts.
b) Welding procedure and method of manufacture for all phases of manufacture.
c) Quality Control Manual & Quality Control Plan.

Once the approval has been given by purchaser any changes in design, material and method of manufacture shall be notified to the Purchaser whose approval in writing of all changes shall be obtained before the insulting joint are manufactured.

9.4 Within four weeks from the approval date Manufacturer shall submit one reproducible and six copies of the approved drawings, documents and specifications as listed in 9.3 of this specification.

9.5 Prior to shipment, the manufacturer shall submit one reproducible and six copies of the test certificates as listed in Clause 6.0 of this specification.

Edition : 1

SPECIFICATION
FOR FLOW
TEES

SPECIFICATION NO.: MEC/TS/05/21/011

(OIL & GAS SBU)
MECON LIMITED
DELHI 110 092

CONTENTS

Sl.No.	Description
1.0	SCOPE
2.0	REFERENCE DOCUMENTS
3.0	MANUFACTURER'S QUALIFICATION
4.0	MATERIALS
5.0	DESIGN AND CONSTRUCTION REQUIREMENTS
6.0	INSPECTION AND TESTS
7.0	TEST CERTIFICATES
8.0	PAINTING, MARKING AND SHIPMENT
9.0	WARRANTY
10.0	DOCUMENTATION

AMENDMENT STATUS

Sl. No.	Clause / Paragraph / Annexure / Exhibit / Drawing Amended	Page No.	Revision	Date	By (Name)	Verified (Name)

1.0 SCOPE

This specification covers the basic requirements for the design, manufacture and supply of carbon steel flow tees to be installed in pipeline system for handling hydrocarbons in liquid or gaseous phase.

2.0 REFERENCE DOCUMENTS

Reference has also been made in this specification to the latest edition of the following codes, standards and specifications :

a)	ASME B 31.4	:	Liquid Transportation Systems for Hydrocarbons, Liquid Petroleum Gas, Anhydrous Ammonia and Alcohols.
b)	ASME B 31.8	:	Gas Transmission and Distribution Piping System
c)	ASME B 16.9	:	Factory made wrought steel butt welding fittings.
d)	ASME Sec. VIII	:	Boiler & Pressure Vessels Code-Rules for the construction of pressure vessels.
e)	ASME Sec. IX	:	Boiler & Pressure Vessel Code-Welding & Brazing Qualifications.
f)	ASTM A 370	:	Mechanical Testing of Steel Products
g)	MSS-SP-53	:	Quality Standard for Steel Castings and Forgings for Valves, Flanges and fittings and other Piping components and - Magnetic Particle Examination Method.
h)	MSS-SP-75	:	Specification for High Test Wrought Butt Welding Fittings
i)	API 1104	:	Specification for Welding Pipeline and Related Facilities
j)	SSPC-VIS-1	:	Steel Structures Painting Council

2.2 In case of conflict between the requirements of this specification and any code, Standard and Specification referred in Clause 2.1 above. Order of precedence shall be as follows :

- Data Sheets
- This Specification
- Other Referred Codes & Standards
- Manufacturer's Standard.

3.0 MANUFACTURER'S QUALIFICATION

Manufacturer who intend bidding for flow tees must possess the records of a successful proof test for tees used in the fabrication of flow tees, in accordance with the provisions of ASME B16.9/ MSS-SP-75. These records shall be submitted at the time of bidding.

4.0 MATERIALS

4.1 Material for the pressure containing parts of the flow tees shall be indicated in the data sheet. Other parts shall be as per manufacturer's standard suitable for the service conditions indicated in data sheet and shall be subjected to approval by Purchaser.

4.2 Fully killed Carbon steel shall be used in the manufacture of flow tees.

4.3 Each heat of steel used for the manufacture of pressure containing parts of the flow tees shall have carbon equivalent (CE) not greater than 0.45 calculated from the check analysis in accordance with the following formula.

$$CE = C + Mn/6 + (Cr+Mo+V)/5 + (Ni+Cu)/15$$

4.4 When specified in Data sheet, Charpy V-notch test shall be conducted for each heat of steel used in manufacture of pressure containing parts of flow tee. Test shall conform to the provisions of MSS-SP-75 / ASTM A-370 and at a temperature of 0°C for pressure containing parts material. The Charpy impact test specimen shall be taken in the direction of principal grain flow and notched perpendicular to the original surface of the plate or forging. The average impact energy values of full sized three specimens shall be as follows, unless indicated otherwise in the data sheets:

Diameter (inches)	**Base Metal (joules)**	**Weld Metal and HAZ (joules)**
For all sizes	27	27

Minimum impact energy value of any one specimen shall not be less than 80% of the above average values.

When Low Temperature Carbon Steel (LCTS) materials are specified in Datasheet or offered by Manufacturer, the Charpy V-notch test requirements of applicable material standard shall be complied with.

4.5 When specified in the data sheet, hardness test shall be carried out as per ASTM A 370 for each heat of steel used. The maximum hardness of base metal, weld metal and HAZ of all pressure containing parts shall be 248 $HV_{10,}$ unless otherwise specified.

5.0 DESIGN AND CONSTRUCTION REQUIREMENTS

5.1 Flow tees shall be designed and manufactured in accordance with the provisions of codes and standards referred in Section 2.0 of this specification. Design factor and corrosion allowance indicated in data sheet shall be taken into account for design of

flow-tees.

5.2 Flow tees shall generally conform to the figure shown in the data sheet and shall meet following requirements as minimum:

a) An internal pipe having the same diameter as the connecting pipeline allowing the passage of scraper/ instrumented pigs, provided with holes/slots located in the centre line of the branch. The holes shall be oriented at 45^0 angle. The holes shall be designed to prevent the pig getting stuck or damaged without affecting the flow through the branch line. The area of the holes/slots shall be atleast equal to the internal area of branch size.

b) A forged / submerged arc welded `tee' as per ASME B 16.9/ MSS-SP-75 enclosing the internal pipe fixed to it by suitably shaped forged steel rings. Machined steel rings shall not be used. The centre-to-end dimension of the outlet shall meet the minimum recommended dimension of the referred standard. Circumferential welding on the branch outlet is not acceptable. Pup shall not be provided either at the run or at the branch.

c) Tees used for fabrication of flow tees shall be seamless type for run sizes DN ≤ 350 mm (14″) and shall be either welded or seamless type for run sizes DN ≥ 400 mm (16″). Tees shall conform to ASME B16.9 for run size up to DN 350(14″). For run sine DN ≥ 400 mm (16″), the tees shall confirm to MSS-SP-75/ASME B16.9.

5.3 Butt weld ends shall be beveled as per MSS-SP-75.

5.4 All flow tees shall be completely stress relieved as per MSS-SP-75.

5.5 Stub-in or pipe to pipe connection shall not be used in the manufacture of flow tees. Flow tees shall be manufactured by forging or extrusion methods. In case flow tees are manufactured using welded tees, the longitudinal weld seam shall be at least 90° to the branch connection.

5.6 All welds shall be made by welders and welding procedures qualified in accordance with ASME Section-IX. The welding procedure qualification test shall include charpy impact test and hardness test and shall meet the requirements of clause 4.4 and 4.5 of this specification respectively.

5.7 Repair by welding on parent metal is not allowed. Repair of welds shall be carried out only after specific approval by Purchaser's Representative for each repair. The repair welding shall be carried out by the welders and welding procedures duly qualified as per ASME Section-IX and records for each repair shall be maintained. Repair welding procedure qualification shall include all test, which are applicable for regular production welding procedure qualification.

6.0 INSPECTION AND TESTS

6.1 The manufacturer shall perform all inspections and tests as per the requirements of this specification and the relevant codes, prior to shipment, at his works. Such inspection and tests shall be, but not limited to the following :

6.1.1 All flow tees shall be visually inspected. The internal & external surfaces of the flow tees shall be free from any strikes, gauges & other detrimental defects.

6.1.2 Dimensional checks shall be carried out as per the approved drawing.

6.1.3 Chemical composition and Mechanical properties shall be checked as per MSS-SP-75 and this specification for each heat of steel used.

6.1.4 Non destructive examination of individual flow tees shall be performed as given below:

a) 100% inspection by radiography shall be carried out on all butt welds of pressure containing parts. Acceptance limits shall be as per API 1104.

b) Welds which in Purchaser's Representative's opinion cannot be inspected by radiographic methods shall be checked by ultrasonic or magnetic particle methods. Acceptance criteria shall be as per ASME Section VIII Appendix-12 and Appendix-6 respectively.

c) Magnetic particle or liquid penetrant examination shall be performed on cold formed butt welding tees with extruded outlets that are subjected to an extreme fiber elongation of greater than 5%. The examination shall be carried out as per the supplementary Requirement SR 3 of MSS-SP-75.

d) All finished wrought weld ends shall be 100% ultrasonically tested for lamination type defects for a distance of 25mm from the end. Any lamination larger than 6.35mm shall not be acceptance.

e) All forgings shall be wet magnetic particle examined on 100% of the forged surfaces. Method and acceptance shall comply with MSS-SP-53.

6.2 Purchaser's Representative shall also perform stage wise inspection and witness tests as indicated in clause 6.1 at manufacturer's works prior to shipment. Manufacturer shall give reasonable notice of time and shall provide without charge reasonable access and facilities required for inspection, to the Purchaser's Representative.

Inspection and tests performed/ witnessed by Purchaser's Representative shall in no way relieve the Manufacturer's obligation to perform the required inspection and tests.

7.0 TEST CERTIFICATES

7.1 Manufacturer shall submit following certificates to Purchaser's Representative :

a) Test certificates relevant to the chemical analysis and mechanical properties of the materials used for construction as per this specification and relevant

standards.

b) Test reports on radiographic, ultrasonic inspection & wet magnetic particle examination.

c) Certificates for each flow tee stating that it is capable of withstanding without leakage for a test duration of 15 minutes and test pressure which results in a hoop stress equivalent to 95% of the specified minimum yield strength and for the pipe with which the flow tee is to be attached without impairing its serviceability.

d) Test reports on heat treatment carried out.

e) Welding Procedures & Welders qualification reports.

8.0 PAINTING, MARKING AND SHIPMENT

8.1 Flow tees entire surface shall be thoroughly cleaned, freed from rust and grease and applied with sufficient coats of standard mill coating / corrosion resistant paint, after all the required tests have been performed and accepted by Purchaser's Representative. The surface preparation shall be carried out by shot blasting to SP 6 in accordance with "Steel Structures Painting Council - Visual Standard - SSPC-VIS-1".

8.2 Manufacturer shall indicate the type & recommended coats of standard mill coating / corrosion resistant paint used, in the drawing submitted for approval.

8.3 Flow tees shall be marked with indelible paint with the following data :

a) Manufacturer's Name
b) Nominal diameter in inches D1 x D2
c) End thickness in mm T1 x T2
d) Material
e) Tag numbers

8.4 Flow tees shall be suitably protected to avoid any damage during transit. Metallic or high impact plastic bevel protectors shall be provided for weld ends.

9.0 WARRANTY

Purchaser will be reimbursed by Manufacturer for any flow tee furnished to this specification which fails under field hydrostatic testing or does not perform satisfactory during the pigging operation and if such failure or non-performance is caused by a defect in the flow tees which is outside the acceptance limits of this specification. The reimbursement cost shall include cost of flow tee, labour and equipment rental for finding, excavating, cutting, and installation of replaced flow tee in position.

10.0 DOCUMENTATION

10.1 At the time of bidding, bidder shall submit the following documents :-

a) General arrangement drawing of flow tees with overall dimensions and details of internal sleeve and cross sectional drawings.

b) Reference list of previous supplies of flow tees of similar specification with relevant details viz Project, Year of supply, Client, size, Rating and service for the last five years.

c) Clausewise list of deviation from this specification, if any.

d) Records of successful proof test for tees used for fabrication of flow tees, qualifying the range of sizes quoted.

e) Brief description of the manufacturing, heat treatment and quality control facilities of the manufacturer's work.

10.2 Within two weeks of placement of order, the manufacturer shall submit four copies, of but not limited to, the following drawings, documents and specifications for approval.

a) Fabrication drawings and relevant calculations for pressure containing parts.

b) Calculation for the holes/slots sizes/ flow area.

c) Method of manufacture, welding procedure and heat treatment details.

d) Quality control Manual & Quality Control Plan.

e) Type of mill coating / anti-corrosion paint / anti-fouling paint.

Once the approval has been given by Purchaser, any change in design, material method of manufacture shall be notified to Purchaser whose approval in writing of all changes shall be obtained before the flow tees are manufactured.

10.3 Within four weeks from the approval date Manufacturer shall submit one reproducible and six copies of the approved drawings, documents and specification as stated in clause 10.2 of this specification.

10.4 Prior to shipment, Manufacturer shall submit one reproducible and six copies of test certificates as listed in clause 7.0 of this specification.

10.5 All documents shall be in English Language.

Edition : 1

SPECIFICATION
FOR
SEAMLESS FITTINGS & FLANGES
[SIZE UPTO DN 400 mm (16”) NB]

SPECIFICATION NO.: MEC/TS/05/21/025

(OIL & GAS SBU)
MECON LIMITED
DELHI 110 092

CONTENTS

SL.NO.	DESCRIPTION
1.0	SCOPE
2.0	REFERENCE DOCUMENTS
3.0	MANUFACTURER'S QUALIFICATION
4.0	MATERIALS
5.0	DESIGN AND MANUFACTURE
6.0	INSPECTION AND TESTS
7.0	TEST CERTIFICATES
8.0	PAINTING, MARKING AND SHIPMENT
9.0	DOCUMENTATION

1.0 SCOPE

This specification covers the minimum requirements for the design, manufacture and supply of following carbon steel flanges and fittings of size upto DN 400 mm (16") to be installed in onshore pipeline systems handling non-sour hydrocarbons in liquid or gaseous phase including Liquefied Petroleum Gas (LPG) :

- Flanges such as welding neck flanges, blind flanges, spectacle blinds, spacers and blinds etc.

- Seamless fittings such as tees, elbows, reducers, caps, outlets etc.

2.0 REFERENCE DOCUMENTS

2.1 Reference has been made in this specification to the latest edition (edition enforce at the time of issue of enquiry) of the following Codes, Standards and Specifications :

ASME B31.4	-	Pipeline Transportation Systems for Liquid Hydrocarbons and Other Liquids
ASME B31.8	-	Gas Transmission and Distribution Piping Systems
ASME B16.5	-	Pipe Flanges and Flanged Fittings
ASME B16.9	-	Factory Made Wrought Steel Butt Welding Fittings
ASME B 16.11	-	Forged Steel Fittings, Socket Welding and Threaded
ASME B 16.48	-	Steel Line Blanks
ASME Sec VIII	-	Boiler and Pressure Vessel Code - Rules for Construction of Pressure Vessels
ASME Sec IX	-	Boiler and Pressure Vessel Code - Welding and Brazing Qualifications
ASTM A 370	-	Standard Test Methods and Definitions for Mechanical Testing of Steel Products.
MSS-SP-25	-	Standard Marking System for Valves, Fittings, Flanges and Unions

MSS-SP-97 - Forged Carbon Steel Branch Outlet Fittings - Socket Welding, Threaded and Butt welding Ends.

2.2 In case of conflict between the requirements of this specification and the requirements of above referred Codes and Standards, the requirements of this specification shall govern.

3.0 **MANUFACTURER'S QUALIFICATION**

Manufacturer who intends bidding for fittings must possess the records of a successful proof test, in accordance with the provisions of ASME B16.9 / MSS-SP-75 as applicable.

4.0 MATERIAL

4.1 The Carbon Steel used in the manufacture of flanges and fittings shall be fully killed. Material for flanges and fittings shall comply with the material standard indicated in the Purchase Requisition. In addition, the material shall also meet the requirements specified hereinafter.

4.2 Each heat of steel used for the manufacture of flanges and fittings shall have Carbon Equivalent (CE) not greater than 0.45 calculated from check analysis in accordance with the following formula:

$$CE = C + \frac{Mn}{6} + \frac{Cr + Mo + V}{5} + \frac{Ni + Cu}{15}$$

Carbon contents on check analysis shall not exceed 0.22%.

4.3 For flanges and fittings specified to be used for Gas service or LPG service, Charpy V-notch test shall be conducted on each heat of steel. Unless specified otherwise, the Charpy V-notch test shall be conducted at 0°C in accordance with the impact test provisions of ASTM A 370 for flanges and fittings.

The average absorbed impact energy values of three full-sized specimens shall be 27 joules. The minimum impact energy value of any one specimen of the three specimens analysed as above, shall not be less than 22 Joules.

When Low Temperature Carbon Steel (LTCS) materials are specified for flanges and fittings in Purchase Requisition, the Charpy V-notch test requirements of applicable material standard shall be complied with.

4.4 For flanges and fittings specified to be used for Gas service or LPG service, Hardness test shall be carried out in accordance with ASTM A 370. Hardness testing shall cover at least 10% per item, per size, per heat, per manufacturing method. A full thickness cross section shall be taken for this purpose and the maximum hardness shall not exceed 248 HV_{10}.

4.5 In case of RTJ (Ring Type Joint) flanges, the groove hardness shall be minimum 140 BHN. Ring Joint flanges shall have octagonal section of Ring Joint.

5.0 DESIGN AND MANUFACTURE

5.1 Flanges such as weld neck flanges and blind flanges shall conform to the requirements of ASME B16.5.

5.2 Spectacle blind and spacer & blind shall conform to the requirements of ASME B 16.48.

5.3 Fittings such as tees, elbows, reducers, etc. shall be seamless type and shall conform to ASME B16.9 for sizes DN 50 mm (2") to DN 400 mm (16") (both sizes included) and ASME B 16.11 for sizes below ON 50 mm (2").

5.4 Fittings such as weldolets, sockolets, nippolets, etc. shall be manufactured in accordance with MSS-SP-97.

5.5 Type, face and face finish of flanges shall be as specified in Purchase Requisition.

5.6 Flanges and fittings manufactured from bar stock are not acceptable.

5.7 All butt weld ends shall be bevelled as per ASME B 16.5 / ASME B 16.9 / MSS-SP-97 as applicable.

5.8 Repair by welding on flanges and fittings is not permitted.

5.9 Stub-in or pipe to pipe connection shall not be used in the manufacture of tees. Tees shall be manufactured by forging or extrusion methods. The longitudinal weld seam shall be kept at 90° from the extrusion. Fittings shall not have any circumferential joint .

6.0 INSPECTION AND TESTS

6.1 The Manufacturer shall perform all inspections and tests as per the requirement of this specification and the relevant codes, prior to shipment at his works. Such inspections and tests shall be, not but limited to the following :

a) All flanges and fittings shall be visually inspected. The internal and external surfaces of the flanges and fittings shall be free from any strikes, gauges and other detrimental defects.

b) Dimensional checks shall be carried out on finished products as per ASME B16.5 for flanges, ASME B16.48 for spacers and blinds and ASME B16.9 / MSS-SP-97 as applicable for fittings and as per this specification.

c) Chemical composition and mechanical properties shall be checked as per relevant material standards and this specification, for each heat of steel used.

d) All finished wrought weld ends subject to welding in field, shall be 100% tested for lamination type defects by ultrasonic test. Any lamination larger then 6.35 mm shall not be acceptable.

6.2 Purchaser's Inspector reserves the right to perform stage wise inspection and witness tests, as indicated in clause 6.1 of this specification at Manufacturer's Works prior to shipment. Manufacturer shall give reasonable notice' of time and shall provide, without charge, reasonable access and facilities required for inspection, to the Purchaser's Inspector.

Inspection and tests performed / witnessed by Purchaser's Inspector shall in no way relieve the Manufacturer's obligation to perform the required inspection and tests.

7.0 TEST CERTIFICATES

Manufacturer shall furnish the following certificates:

a) Test certificates relevant to the chemical analysis and mechanical properties of the materials used for manufacture of flanges and fittings as per relevant standards and this specification.

b) Test Reports on non destructive testing.

c) Certificates for each fitting stating that it is capable of withstanding without leakage a test pressure, which results in a hoop stress equivalent to 100 % of

the specified minimum yield strength for the pipe with which the fitting is to be attached without impairment of serviceability.

8.0 PAINTING, MARKING AND SHIPMENT

8.1 After all inspection and tests required have been carried out; all external surfaces shall be thoroughly cleaned to remove grease, dust and rust and shall be applied with standard mill coating for protection against corrosion during transit and storage. The coating shall be easily removable in the field.

8.2 Ends of all fittings and weld neck flanges shall be suitably protected to avoid any damage during transit. Metallic or high impact plastic bevel protectors shall be provided for fittings and flanges. Flange face shall be suitably protected to avoid any damage during transit.

8.3 All flanges and fittings shall be marked as per applicable dimension / manufacturing standard.

9.0 DOCUMENTATION

Documentation to be submitted by Manufacturer to Company is summarized below. Number of Copies (Hard copies / soft copies etc.) shall be as indicated in CONTRACT document / Material Requisition.

9.1 At the time of bidding, Manufacturer shall submit the following documents:

a) Reference list of previous supplies of similar fittings of similar specification.
b) Clausewise list of deviations from this specification, if any.
c) Brief description of the manufacturing and quality control facilities at Manufacturer's works.
d) Manufacturer's qualification requirement as per clause 3.0 of this specification.
e) Quality Assurance Plan (QAP) enclosed with this tender duly signed, stamped and accepted.

9.2 Prior to shipment, the Manufacturer shall submit test certificates as listed in clause 7.0 of this specification.

9.3 All documents shall be in English Language only.

Edition : 1

SPECIFICATION
FOR
FLANGES AND WELDED FITTINGS
[SIZE DN 450 mm (18”) AND ABOVE]

SPECIFICATION NO.: MEC/TS/05/21/026

(OIL & GAS SBU)
MECON LIMITED
DELHI 110 092

CONTENTS

SL.NO.	DESCRIPTION
1.0	SCOPE
2.0	REFERENCE DOCUMENTS
3.0	MANUFACTURER'S QUALIFICATION
4.0	MATERIALS
5.0	DESIGN AND MANUFACTURE
6.0	INSPECTION AND TESTS
7.0	TEST CERTIFICATES
8.0	PAINTING, MARKING AND SHIPMENT
9.0	DOCUMENTATION

1.0 SCOPE

This specification covers the minimum requirements for the design, manufacture and supply of following items to be installed in pipeline system handling hydrocarbons in liquid or gaseous phase including Liquefied Petroleum Gas (LPG) :

- Carbon Steel Welded Fittings 450 mm (18") NB and above, such as tees, elbows, reducers, caps, outlets etc.

- Carbon Steel Flanges 450mm (18") NB and above, such as welding neck flanges, blind flanges, spectacle bind, spacers & blinds etc.

This specification does not cover the above mentioned items which are to be installed in pipeline system handling sour hydrocarbons (liquid/ gas) service as defined in NACE Standard MR-01-75.

2.0 REFERENCE DOCUMENTS

2.1 Reference has been made in this specification to the latest edition (edition enforce at the time of issue of enquiry) of the following Codes, Standards and Specifications :

ASME B31.4	-	Pipeline Transportation Systems for Liquid Hydrocarbons and Other Liquids
ASME B31.8	-	Gas Transmission and Distribution Piping Systems
ASME B16.5	-	Pipe Flanges and Flanged Fittings
ASME B16.9	-	Factory Made Wrought Steel Butt Welding Fittings
ASME B 16.11	-	Forged Steel Fittings, Socket Welding and Threaded
ASME B 16.48	-	Steel Line Blanks
ASME Sec VIII	-	Boiler and Pressure Vessel Code - Rules for Construction of Pressure Vessels
ASME Sec IX	-	Boiler and Pressure Vessel Code - Welding and Brazing Qualifications
ASTM A 370	-	Standard Test Methods and Definitions for Mechanical Testing of Steel Products.

MSS-SP-44 - Steel Pipeline Flanges 22" & 26" and above.

MSS-SP-25 - Standard Marking System for Valves, Fittings, Flanges and Unions

MSS-SP-97 - Forged Carbon Steel Branch Outlet Fittings - Socket Welding, Threaded and Butt welding Ends.

2.2 In case of conflict between the requirements of this specification and the requirements of above referred Codes and Standards, the requirements of this specification shall govern.

3.0 MANUFACTURER'S QUALIFICATION

The design of fittings shall be established by mathematical analysis contained in ASME Sec. VIII/ ASME B31.3. The design of fittings for which mathematical analysis is not available shall be established by proof testing. These records shall be submitted at the time of bidding, qualifying the complete range of fittings offered. Manufacturer who intends bidding for fittings must posses the records of a successful proof test in accordance with the provisions of ASME B16.9 and/ or MSS-SP-75. These records shall be submitted at the time of bidding, qualifying the complete range of fittings offered. Failure to submit such records at the time of bidding may become a cause of rejection of the offer.

4.0 MATERIALS

4.1 The steel used in the manufacture of fittings and flanges shall be fully killed carbon steel with a grain size of ASTM 7 or finer as defined in ASTM E112. This requirement shall not apply to quenched and tempered fittings. The basic material for fittings and flanges shall be as indicated in the Material Requisition. Additionally, the material shall also meet the requirements specified hereinafter.

4.2 Each heat of steel used for the manufacture of fittings and flanges shall have carbon equivalent (CE) not greater than 0.45 calculated from check analysis in accordance with the following formula:

$$CE = C + \frac{Mn}{6} + \frac{Cr + Mo + V}{5} + \frac{Ni + Cu}{15}$$

4.3 Carbon contents on check analysis shall not exceed 0.22%.

4.4 For flanges and fittings specified to be used for Gas service or LPG service, Charpy V-notch test shall be conducted on each heat of steel. Unless specified otherwise, the Charpy V-notch test shall be conducted at 0°C in accordance with the impact test provisions of ASTM A 370 for flanges and MSS-SP-75 for all fittings.

The average absorbed impact energy values of three full-sized specimens shall be 27 joules. The minimum impact energy value of any one specimen of the three specimens analysed as above, shall not be less than 22 Joules.

When Low Temperature Carbon Steel (LTCS) materials are specified in Material Requisition for flanges and fittings, the Charpy V-notch test requirements of applicable material standard shall be complied with.

4.5 Hardness test shall be carried out as per ASTM A370 for each heat of steel used. A full thickness cross-section shall be taken for this purpose and the maximum hardness of base metal, weld metal and heat affected zone shall not exceed 248 HV_{10}. Hardness testing shall cover at least 10% per item, per size, per heat, per manufacturing method.

4.6 One transverse guided weld bend test shall be performed for each lot of welded fittings produced from the same heat in accordance with provisions of MSS-SP-75. The dimension "A" in guided bend test shall not exceed 4.0 times the nominal wall thickness and dimension "B" shall be equal to A+2t+3.2mm, where "t" is nominal wall thickness.

4.7 One transverse weld tensile test shall be conducted on each heat/ lot of welded fittings in accordance with the requirements of MSS-SP-75.

4.8 In case of RTJ (Ring Type Joint) flanges, the groove hardness shall be minimum 140 BHN. Ring Joint flanges shall have octagonal section of Ring Joint.

5.0 DESIGN AND MANUFACTURE

5.1 Flanges such as weld neck flanges and blind flanges shall conform to the requirements of ASME B16.5 upto size DN 600mm (24") excluding DN 550mm (22"), MSS-SP-44 for sizes DN 550mm (22") and ASME B16.47 for sizes DN 650mm (26") and above.

5.2 Spectacle blind and Spacer & blind shall conform to the requirements of API 590 upto sizes DN 600mm (24"). For sizes above DN 650mm (26") and above, Spectacle blind and Spacer & blind shall conform to Manufacturer's standard.

5.3 Type, face and face finish of flanges shall be as specified in Material Requisition.

5.4 Fittings such as tees, elbows and reducers shall be either welded or seamless type. All fittings shall comply with the requirements of MSS-SP-75. Fittings such as weldolets etc. shall be manufactured in accordance with MSS-SP-97.

5.5 Tees shall be manufactured by forging or extrusion method. Stub-in or pipe to pipe connection shall not be used in the manufacture of tees. The longitudinal weld seam shall be kept at 90° from the extrusion. Fittings shall not have any circumferential weld joint.

5.6 All butt weld ends shall be bevelled as per ASME B16.5/ MSS-SP-44/ ASME B16.47 as applicable for flanges and MSS-SP-75 / MSS-SP-97 as applicable for fittings.

5.7 Inside weld projection for welded fitting shall not exceed 1.6 mm. The reinforcement of inside weld seam shall be removed for a distance of 100mm from each end of welded fittings.

5.8 All welds shall be made by welders and welding procedures qualified in accordance with provisions of ASME Sec. IX. The procedure qualification shall include impact test for weld/ heat affected zone, hardness test and guided bend test and shall meet the requirements of Clauses 4.4, 4.5 and 4.6 of this specification, respectively.

5.9 Repair by welding on flanges and parent metal of fittings is not allowed. Repair of weld seam by welding shall be carried out by welders and welding procedures duly qualified as per ASME Section IX and API 1104 and records for each repair shall be maintained. Repair welding procedure qualification shall include all tests which are applicable for regular production welding procedure qualification.

6.0 INSPECTION AND TESTS

6.1 The Manufacturer shall perform all inspections and tests as per the requirement of this specification and the relevant codes, prior to shipment at his works. Such inspections and tests shall be, but not limited to, the following :

6.1.1 All fittings and flanges shall be visually inspected. The internal and external surfaces of the fittings shall be free from any strikes, gouges, burrs and other detrimental defects.

6.1.2 Dimensional checks shall be carried out on finished products as per ASME B16.5/ MSS-SP-44/ ASME B16.47 as applicable for flanges and ASME B16.9/ MSS-SP-75 /

MSS-SP-97 as applicable for fittings and as per this specification. Fittings not covered in MSS-SP-75 shall be checked as per Manufacturer's standard.

6.1.3 Chemical composition and mechanical properties shall be checked as per relevant material standards and this specification, for each heat of steel used.

6.1.4 The non-destructive inspection shall be carried out as given below :

a) All butt and repair welds for welded fittings shall be examined 100% by radiography. Acceptance limits shall be as per API 1104.

b) When elbows of size $\geq$ 18" NB are manufactured, the first elbow of each radius, diameter and wall thickness shall be ultrasonically checked for sufficient wall thickness in areas where a minimum wall thickness is to be expected. This shall be followed by random inspection of one out of every three elbows of the same radius, diameter and wall thickness.

c) All finished wrought weld ends shall be 100% tested for lamination type defects by ultrasonic test. Any lamination larger than 6.35mm shall not be acceptable.

d) Magnetic particle or liquid penetrant examination shall be performed on cold formed butt welding tees with extruded outlets, that are subjected to an extreme fiber elongation of greater than 5% shall be carried out as per the Supplementary Requirement SR3 of MSS-SP-75.

e) Welds which cannot be inspected by radiographic methods shall be checked by ultrasonic or magnetic particle methods. Acceptance criteria shall be as per ASME Section VIII Appendix 12 and Appendix 6, respectively.

6.2 Purchaser's Inspector reserves the right to perform stagewise inspection and witness tests, as indicated in Clause 6.1 of this specification at Manufacturer's Works prior to shipment. Manufacturer shall give reasonable notice of time and shall provide, without charge, reasonable access and facilities required for inspection, to the Purchaser's Inspector. Inspection and tests performed/ witnessed by Purchaser's Inspector shall in no way relieve the Manufacturer's obligation to perform the required inspection and tests.

7.0 TEST CERTIFICATES

Manufacturer shall furnish the following certificates :

a) Test certificates relevant to the chemical and mechanical properties of the materials used for manufacture of flanges and fittings as per relevant standards and this specification.

b) Test Reports on radiography, ultrasonic inspection and magnetic particle examination.

c) Test reports of heat treatment carried out as per the specification.

d) Welding procedures and welders' qualification reports.

e) Test certificates for each fitting stating that it is capable of withstanding without leakage a test pressure which results in a hoop stress equivalent to 100% of the specified minimum yield strength for the pipe with which the fitting is to be attached without impairment of serviceability.

8.0 PAINTING, MARKING AND SHIPMENT

8.1 After all required inspection and tests have been carried out, all external surfaces shall be thoroughly cleaned to remove grease, dust & rust and shall be applied with standard mill coating for protection against corrosion during transit and storage. The coating shall be easily removable in the field. Manufacturer shall furnish the details of paint used at the time of bidding.

8.2 Ends of all fittings and weld neck flanges shall be suitably protected to avoid any damage during transit. Metallic or high impact plastic bevel protectors shall be provided for fittings and flanges. Flange face shall be suitably protected to avoid any damage during transit.

8.3 All fittings and flanges shall be marked as per applicable dimension / manufacturing standard.

8.4 Package shall be marked legibly with suitable marking ink to indicate the following :

a) Manufacturer's Name
b) Type of flange(s) and fittings(s)
c) Nominal diameter, thickness and material grade
d) Purchase order number and item serial number

9.0 DOCUMENTATION

9.1 Manufacturer shall furnish at the time of bidding, the following documents:

a) Reference list of similar supplies including all relevant details, viz. Project, Year, Client, Location, Size and Service.

b) Record of successful qualification test of fittings in compliance with the requirement of this specification.

c) Brief description of the manufacturing, heat treatment and quality control facilities of the Manufacturer's Works.

d) Clause-wise list of deviations from this specification, if any.

9.2 Within three weeks of placement of order, Manufacturer shall submit four copies of method of manufacture, testing and quality control procedure for raw material and finished product for Purchaser's approval.

Once the approval has been given by Purchaser, any changes in design, material and method of manufacture shall be notified to the Purchaser, whose approval in writing of all changes shall be obtained before the flanges and fittings are manufactured.

9.3 Within four weeks from the approval date, Manufacturer shall submit six copies of all documents as listed in Clause 9.2 of this specification.

9.4 Prior to shipment, the Manufacturer shall submit six copies of the test certificates as listed in Clause 7.0 of this specification.

9.5 All documents shall be in English Language only.

PROCESS & PIPING DESIGN SECTION
MECON LIMITED
DELHI 110 092

मेकॉन

TECHNICAL SPECIFICATION
FOR
ASSORTED PIPES

SPECIFICATION NO. : MEC/TS/05/62/59A, R-0

CONTENTS

Sl.No.	Description	Page No.
1.0	GENERAL	2
2.0	IBR PIPES	4
3.0	HYDROSTATIC TEST	5
4.0	MARKING & DESPATCH	5
ANNEXURE-I :	HYDROSTATIC TEST	7

Prepared By :	Checked By :	Approved By :

1.0 GENERAL

1.1 All pipes and their dimensions, tolerances, chemical composition, physical properties, heat treatment, hydrotest and other testing and marking requirements shall conform to the latest codes and standards specified in the Material Requisition (MR). Deviation(s), if any, shall be clearly highlighted in the offer.

1.2 Testing

1.2.1 Test reports shall be supplied for all mandatory tests as per the applicable material specifications. Test reports shall also be furnished for any supplementary tests as specified in the MR & Clauses 1.10 & 1.11.

1.2.2 Material test certificates (physical property, chemical composition & treatment report) shall also be furnished for the pipes supplied.

1.3 Manufacturing Processes

1.3.1 Steel made by Acid Bessemer Process shall not be acceptable.

1.3.2 All longitudinally welded pipes other than IS:3589 should employ automatic welding.

1.4 Pipe shall be supplied in single or double random length of 4 to 7 and 7 to 14 meters, respectively.

1.5 a) Seamless and E.R.W. pipes shall not have any circumferential seam joint in a random length. However, in case of E.FS.W. pipe, in one random length one welded circumferential seam of same quality as longitudinal weld is permitted. This weld shall be at least 2.5 m from either end. The longitudinal seams of the two portions shall be staggered by 90°. Single random length in such cases shall be 5 to 7m.

b) Unless otherwise mentioned in the respective material code, E.FS.W. pipes < 36" shall not have more than one longitudinal seam joint and E.FS.W. pipes ≥ 36" shall not have more than two longitudinal seam joints.

1.6 Pipe with screwed ends shall have NPT external taper pipe threads conforming to ASME/ ANSI B1.20.1 upto 1.5" NB & IS:554 for 2" to 6" NB.

1.7 Pipe with bevelled ends shall be in accordance with ASME B16.25. Weld contours shall be as follows:

Material	Wall Thickness	Weld Contour
Carbon Steel (Except Low Temp. Carbon Steel)	Upto 22mm	Figure 2 Type A
	> 22mm	Figure 3 Type A
Alloy Steel Stainless Steel & Low Temp. Carbon Steel	Upto 10 mm	Figure 4
	>10 mm & Upto 25 mm	Figure 5 Type A
	> 25 mm	Figure 6 Type A

1.8 Gavanished pipes shall be coated with zinc by hot dip process conforming to IS:4736/ ASTM A 153.

1.9 All austenitic stainless steel pipes shall be supplied in solution annealed condition.

1.10 **I.G.C. Test for Stainless Steels**

1.10.1 For all austenitic stainless steel pipes, intergranular corrosion test shall have to be conducted as per following:

ASTM A262 practice " B " with acceptance criteria of "60 mils/ year (max.)"

OR

ASTM 262 practice " E'' with acceptance criteria of " No cracks as observed from 20X magnification" & "Microscopic structure to be observed from 250X magnification".

1.10.2 When specifically asked for in MR for high temperature application of some grades of austenitic stainless steel (eg.SS 309, 310, 316, 316H etc.), ASTM A262 practice "C" with acceptance criteria of "15 mils/ year (max.)" shall have to be conducted.

1.10.3 For the IGC test as described in 1.10.1 & 1.10.2, two sets of samples shall be drawn from each solution annealing lot; one set corresponding to highest carbon content and the other corresponding to the highest pipe

thickness. When testing in is conducted as per Practice "E", photograph of microscopic structure shall be submitted for record.

1.11 All welded pipes indicated as 'CRYO' & 'LT' in MR shall be impact tested per requirement and acceptance criteria of ASME B31.3. The impact test temperature shall be –196° C & -45° C for stainless steel and carbon steel, respectively, unless specifically mentioned otherwise in MR.

1.12 Pipes under 'NACE' category shall meet the requirements given in MR-01-75.

1.13 Specified heat treatment for carbon steel & alloy steel and solution annealing for stainless steel pipes shall be carried out after weld repairs. Number of weld repairs at the same spot shall be restricted to maximum two by approved repair procedure.

1.14 For black or galvanised pipes to IS:1239, the minimum percentage of elongation shall be 20%.

2.0 IBR PIPES

2.1 IBR Documentation

2.1.1 Pipes under purview of IBR shall be accompanied with IBR certificate original in Form IIIA, duly approved and countersigned by IBR authority/ local authority empowered by the Central Boiler Board of India. Photocopy of the original certificate duly attested by the local boiler inspector where the supplier is located is the minimum requirement for acceptance.

2.1.2 For materials 1 ¼ Cr- ½ Mo (ASTM A335 Gr. P11/ A691 Gr. 1 ¼ Cr) & 2 ¼ Cr-1Mo (ASTM A335 Gr.P22/ A691 Gr. 2 ¼ Cr.), from III-A approved by IBR shall include the tabulation of E_t , S_c & S_r values for the entire temperature range given below. E_t , S_c & S_r values shall be such that throughout the temperature range

$$E_t / 1.5 \geq$$
$$S_r / 1.5 \geq S_a$$
$$S_c \geq$$

where,

S_A : Allowable stress at the working metal temperature.

E_t : Yield point (0.2% proof stress at the working metal temperature).

S_c : The average stress to produce elongation of 1% (creep) in 1,00,000 hrs at the working metal temperature.

S_r : The average stress to produce rupture in 1,00,000 hrs. at the working metal temperature and in no case more than 1.33 times the lowest stress to produce rupture at this temperature.

S_A (psi)	Temperature (°F)											
Material	**500**	**600**	**650**	**700**	**750**	**800**	**850**	**900**	**950**	**1000**	**1050**	**1100**
A335 Gr. P11	*17200*	*16700*	*16200*	*15600*	*15200*	*15000*	*14500*	*12800*	*9300*	*6300*	*4200*	*2800*
A 691 Gr. 1½ Cr	*18900*	*18300*	*18000*	*17600*	*17300*	*16800*	*16300*	*15000*	*9900*	*6300*	*4200*	*2800*
A335 Gr. P2 / A691 Gr. 2 ¼ Cr	*17900*	*17900*	*17900*	*17900*	*17900*	*17800*	*14500*	*12800*	*10800*	*7800*	*5100*	*3200*

Note: S_A values given above are as per ASME B31.3-1999. Values shall be as per the latest edition prevailing.

2.2 For carbon steel pipes under IBR, the chemical composition shall conform to the following;

Carbon (max.) : 0.25%
Others (S, P, Mn) : As prescribed in IBR regulation.

The chemical composition as indicated in this clause is not applicable for pipes other than IBR services.

3.0 HYDROSTATIC TEST

Refer Annexure – I.

4.0 MARKING AND DESPATCH

4.1 All pipes shall be marked in accordance with the applicable codes, standards and specifications. In addition, the purchase order number, the item code & special conditions like “IBR”, “ CRYO”, “NACE”, etc., shall also be marked.

4.2 Pipes under “IBR”, “CRYO”, & “NACE” shall be painted in red stripes, light purple brown stripes & canary yellow stripes, respectively, longitudinally throughout the length for easy identification.

4.3 Paint or ink for marking shall not contain any harmful metal or metallic salts such as zinc, lead or copper which cause corrosive attack on heating.

4.4 Pipes shall be dry, clen and free from from moisture, dirt and loose foreign materials of any kind.

4.5 Pipes shall be protected from rust, corrosion and mechanical damage during transportation, shipment and storage.

4.6 Rust preventive used on machined surfaces to be welded shall be easily removable with a petroleum solvent and the same shall not be harmful to welding.

4.7 Both ends of the pipe shall be protected with the following material:

Plain end	:	Plastic cap
Bevel end	:	Wood, Metal or Plastic cover
Threaded end	:	Metal or Plastic threaded cap

4.8 End protectors to be used on bevelled ends shall be securely and tightly attached with belt or wire.

4.9 Steel end protectors to be used on galvanised pipes shall be galvanised.

ANNEXURE–I

3.0 HYDROSTATIC TEST

3.1 All pipes shall be hydrostatically tested.

3.2 The mill test pressure shall be as follows:

3.2.1 Seamless, E.R.W. & Spiral Welded

a) Carbon Steel

Material Standard	Test Pressure Standard
ASTM A 106 Gr. B	ASTM A 530
API 5L Gr. B, Seamless	API 5L
API 5L, E.R.W.	API 5L
API 5L, Spiral	API 5L
ASTM A333 Gr.3 & 6, Seamless	ASTM A 530
ASTM A 333 Gr. 3 & 6, E.R.W.	ASTM A 530

b) Seamless Alloy Steel

Material Standard	Test Pressure Standard
ASTM A335 GR.P1, P12, P11, P22, P5, P9	ASTM A 530
ASTM A268 TP 405, TP410	ASTM A530

c) Seamless Stainless Steel

Material Standard	Test Pressure Standard
ASTM A312 Gr.TP304, 304L, 304H, 316, 316L, 316H, 321, 347	ASTM A 530

d) Seamless Nickel Alloy

Material Standard	Test Pressure Standard
ASTM B161 UNS No.2200	ASTM B161
ASTM B165 UNS No.4400	ASTM B165
ASTM B167 UNS No.6600	ASTM B167
ASTM B407 UNS No.8800	ASTM B407

e) Welded Nickel Alloy

Material Standard	Test Pressure Standard
ASTM B725 UNS No.2200, 4400	ASTM B725
ASTM B517 UNS No.6600	ASTM B517
ASTM B514 UNS No.8800	ASTM B514

3.2.2 Electric Fusion Welded

a) Carbon Steel & Alloy Steel E.FS.W. (16" & above)

Material Standard	Test Pressure Standard
API 5L Gr.B ASTM A 671 Gr.CC65, 70 (Cl.32) ASTM A 672 Gr.C60, 65, 70 (Cl.12,22) ASTM A 671 Gr.CF60, 65, 66, 70 (Cl.32) ASTM A 691 Gr. ½ Cr, 1Cr, 1 ¼Cr, 2 ¼Cr, 5Cr, 9Cr (Cl.42)	P=2ST/ D S=90% of SMYS (except for API 5L Gr.B) S=85% of SMYS for API 5L Gr.B T=Nominal Wall Thickness D=O.D. of Pipe

b) Stainless Steel E.FS.W. (2" to 6")

The hydrostatic test pressure in kg/ cm^2 for the following materials shall be as given below:

Material Gr.1: ASTM A312 TP304/ 304H/ 316/ 316H/ 321/ 347 welded

Material Gr.2: ASTM A312 TP 304L/ 316L welded

Size	Pipe Schedule: S10		Pipe Schedule : S40		Pipe Schedule : S80	
	Material Gr.1	Material Gr.2	Material Gr.1	Material Gr.2	Material Gr.1	Material Gr.2
2"	100	80	155	130	230	190
3"	80	60	155	130	230	190
4"	80	50	155	130	230	190
6"	65	35	90	75	155	130

c) Stainless Steel E.FS.W. (8" and above).

Material Standard	Test Pressure Standard
ASTM A358 TP 304L, 304, 304H, 316L, 316, 316H, 321, 347 (Classes 1, 3 & 4)	P = 2ST/D S = 85% of SMYS T = Nominal Wall Thickness D = O.D. of Pipe
ASTM A358 TP 304L, 304, 304H, 316L, 316, 316H, 321, 347 (Classes 2 & 5)	P = 2ST/D S = 72% of SMYS T = Nominal Wall Thickness D = O.D. of Pipe

3.2.3 Carbon Steel Pipes to IS Standards

Material Standard	Test Pressure Standard
IS :1239	IS :1239
IS :3589	IS :3589

AMENDMENT TO TECHNICAL SPECIFICATION

AMMENDMENT TO TECHNICAL SPECIFICATION FOR ASSORTED PIPES No. MEC/TS/05/62/59A

1) Refer Page no. 4 of 9:

Clause No. 2.1.1 shall be read as “Pipes under purview of IBR shall be accompanied with IBR certificate original in Form IIIA/ IIID, duly approved and countersigned by IBR authority/ local authority empowered by the Central Boiler Board of India. Photocopy of the original certificate duly attested by the local boiler inspector where the supplier is located is the minimum requirement for acceptance.”

PROCESS & PIPING DESIGN SECTION
MECON LIMITED
DELHI - 110 092

TECHNICAL SPECIFICATION
FOR
LONG RADIUS BENDS

SPECIFICATION NO. : MEC/TS/05/62/015, Rev-1

CONTENTS

1.0 SCOPE

2.0 REFERENCE DOCUMENTS

3.0 MATERIAL

4.0 MANUFACTURE

5.0 INSPECTION AND TESTS

6.0 MARKING, PACKING AND SHIPMENT

7.0 WARRANTY

8.0 DOCUMENTATION

Revision No.	Date	Revised by	Checked by	Approved by

PREPARED BY :	CHECKED BY :	APPROVED BY :

1.0 SCOPE

This specification covers long radius steel pipe bends to be manufactured in accordance with the requirements of MSS-SP (Manufacturers Standardisation Society – Standard Practice) – 75, latest edition, to be used in pipeline system handling Natural Gas. The selection of options permitted by MSS-SP-75 shall be as described below. All applicable requirements contained in the MSS-SP-75 shall be fully valid unless cancelled, replaced or amended by more requirements as stated in this specification. In case of conflict between the requirements of this specification and MSS-SP-75, the requirements of this specification shall govern.

2.0 REFERENCE DOCUMENTS

Reference has also been made in this specification to the latest edition of the following codes, standards and specifications.

a)	ANSI B31.8	:	Gas Transmission and Distribution Piping System.
b)	ASME – Sec. VIII Div. 1	:	Boiler and Pressure Vessel Code
c)	ASME – Sec IX	:	Boiler & Pressure Vessel Code Welding and Brazing Qualifications
d)	API Spec. 5L	:	Line Pipe
e)	ASTM Part-I	:	Steel – Piping, Tubing, Fittings

In case of conflict between the above reference documents and this specification, the requirements of the specification shall prevail.

3.0 MATERIALS

3.1 Bends shall be fabricated from bare steel line pipe (to be issued as free issue item by Purchaser). The details of free issue line pipe material is given separately in LR Bend Data Sheet & Purchase Requisition.

3.2 All mechanical properties of the bends after finishing shall be same as pipe specification as referred in section 3.1. The following tests shall be conducted on finished bends and test procedures shall be as per pipe specification as referred in para 3.1.

3.2.1 One transverse tensile test will be conducted to establish the yield strength, ultimate tensile strength and elongation of :

a) Base material at inside radius of the bend.
b) Base material at outside radius of the bend.

3.2.2 One all weld tensile test will be conducted (wherever applicable) to establish yield strength, ultimate tensile strength and elongation of weld material on bend.

3.2.3 Three transverse Charpy-V-notch impact tests shall be conducted on full sized specimen of the same heat in accordance with ASTM A370 at 0°C for each of the following :

a) Base material at outside radius of the bend.
b) Weld material of bend

3.2.4 **Guided Bend Tests**

One face and one root guided bend weld test shall be performed on samples cut from one bend per heat of steel. The dimensions `A' in guided bend test shall not exceed 4.0 times the nominal wall thickness and dimension `B' shall be equal to A + 2t + 3.2mm.

4.0 MANUFACTURE

4.1 Bends shall be manufactured by hot bending of pipe applying induction heating only.

The adopted procedure shall be completed by suitable heat treatment to achieve the required mechanical and chemical properties of the finished bends and is accepted only after written approval of the Purchaser. The procedure shall ensure uniform bending without any defects other than those allowed in this specification and pipe specification as referred in para 3.1.

4.2 When bending, the weld wherever applicable shall be located at approx. 10° from the neutral zone, measured at outside of the bend as indicated in figure below.

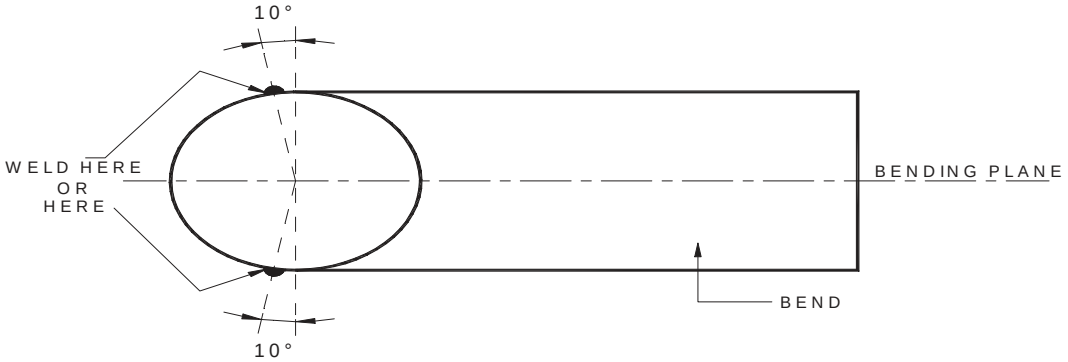

4.3 Bevels at the ends shall be as specified in MSS-SP-75 unless otherwise specified differently in the material/ purchase requisition.

4.4 Bends shall not have any circumferential joint.

4.5 No repair by welding is allowed on any part of the bends.

4.6 The cooling of the bend immediately after bending shall be an interval cooling, alternatively with water and air at a minimum pressure of 2 atmospheres.

4.7 The procedure shall be such which shall not require any additional heat – treatment after bending. If such a heat treatment is required, it is permitted only after the written approval of purchaser and shall be carried out at Manufacturer's expense.

4.8 Bulges, dents and flat areas shall not appear within 100mm from end of the bend.

For the remaining part of the bend these deviations from the original contour of the pipe are permitted but the same shall be repaired, provided these deviations shall not exceed 6.5% of nominal wall thickness in height/ depth and the same shall not extend (in any direction) over a distance of more than 25% of nominal diameter.

4.9 The excess weld material wherever applicable at the inside of the bend shall be removed over a distance of 100mm at both ends.

4.10 **Tolerances**

The dimensions of bends shall be controlled to make sure that they are manufactured according to the tolerances indicated below over and above the requirements of MSS-SP-75

4.10.1 Minimum Inside Diameter : -2.5% of inside nominal diameter except 200mm from ends

Bend Angle : ±1°

Bend Radius : ± 1% of bending nominal Diameter

4.10.2 The manufacturer shall check the wall thickness of the pipe before and after bending along the outside radius either at distances approximately equal to pipe diameter or 300mm whichever is less. The measured wall thickness shall be atleast equal to :

tmin = 0.95 (tnom. $\triangle$ t)

tnom = nominal wall thickness as specified in the material/ purchase requisition.

$\triangle$ t = 0.35mm for a wall thickness smaller than 10mm.

$\triangle$ t = 0.50mm for a wall thickness 10mm or more.

4.10.3 Ovality may be defined as :

$$\frac{\text{OD max.} - \text{OD min}}{\text{OD nom.}}$$

The above value shall be < 1% within 100mm from each end and < 6% for remaining part of the bend. The measurement shall be made over the circumference of the bend either at distance approximately equal to pipe diameter or 300mm whichever is less.

4.10.4 **Wrinkles**

Measurements of the outside diameter shall be taken in the plane of the bend at locations where wrinkles are present (OD max.) and at locations where wrinkles are not present (OD min,). The acceptance limit shall be as defined below.

$$\frac{\text{OD max.} - \text{OD min}}{\text{OD nom.}} < 1\%$$

5.0 INSPECTION AND TESTS

5.1 The manufacturer shall perform all inspection and tests as per the requirements of this specification and MSS-SP-75 prior to shipment at his works. Such inspection and tests shall be, but not limited to, the following :

a) Verify that the unfinished product arriving at manufacturer's shop is in full compliance with the pipe specification as referred in para 3.1.
b) Visual Inspection.
c) Dimensional and tolerances check as per MSS-SP-75 and requirements of section 4.0 of this specification.
d) Check heat treatment, if carried out, as required and maintain its records.
e) Temperature against time recorder charts for each induction heating.
f) Material properties shall be checked to meet the requirements of section 3.0 of this specification.
g) The non-destructive inspection on the finished bend shall be carried out as given below :

- All longitudinal seam welds shall be fully radiographed and acceptance limits shall be as per pipe specification as referred in para 3.1.
- The full circumference of both ends of each bend after bevelling shall be ultrasonically tested for laminations over a length of 25mm and acceptance limits shall be as per pipe specification as referred in para 3.1.

5.2 Purchaser's Representative reserves the right to perform stagewise inspection and witness tests on all bends as indicated in para 5.1 at Manufacturer's works, prior to shipment.

Manufacturer shall give reasonable notice of time and shall provide without charge reasonable access and facilities required for inspection, to the Purchaser's Representative. Inspection and test performed or witnessed by Purchaser's Representative shall in no way relieve the Manufacturer's obligation to perform the required inspection and tests. Under no circumstances any action of the Purchaser's Representative shall relieve the Manufacturer of his responsibility for the material, design, quality and operation of the equipment.

5.3 **Test Certificates**

The Manufacturer shall produce the Certificates (in original) for all, but not limited to, the following :

a) Certificates of chemical analysis and mechanical tests carried out on pipe and bends separately.

b) Certificates of required non-destructive test inspection.

c) Certificates of heat treatments, if any.

d) Certificates of all other tests as required in this specification.

In case any of the above said certificates are not available during the final inspection, the supply shall be considered incomplete.

6.0 **MARKING, PACKING AND SHIPMENT**

6.1 All bends shall be marked as per MSS-SP-75.

6.2 All loose and foreign material i.e. rust, grease, etc. shall be removed from inside and outside of the bends.

6.3 All bends except bevelled ends shall be coated internally and externally with a thin film of zinc chromate red oxide paint for protection against corrosion during transit and storage. The coating shall be easily removable in the field. Manufacturer shall furnish the details for the same.

6.4 Both ends of all bends shall be suitably protected to avoid any damage during transit by means of metallic bevel protectors.

6.5 Package shall be marked legibly with suitable marking to indicate the following:

a) Order Number
b) Package Number
c) Manufacturer's Name
d) Size (Inches) and wall thickness (mm)

7.0 WARRANTY

Purchaser will be reimbursed by Manufacturer for any bend furnished on this order that fails under field hydrostatic test if such failure is caused by a defect in the bend which is outside the acceptance limits of this specification. The reimbursement cost shall include bend cost, labour cost and equipment rental for searching, excavation, cutting out and installation of replaced bend in position. The field hydrostatic test pressure will not exceed that value which will cause a calculated hoop stress equivalent to 100% of specified minimum yield strength of the attached pipe.

8.0 DOCUMENTATION

8.1 All documents shall be in English language.

8.2 At the time of bidding, bidder shall submit the following documents :

a) Reference list of previous supplies of bends of similar specifications.

b) Clause-wise list of deviation from this specification, if any.

c) Brief description of manufacturing and quality control facilities of the Manufacturer's works.

8.3 Within one week of placement of order the Manufacturer shall submit four copies, of the manufacturing process and quality assurance plan for pipe and bends.

Once the approval has been given by Purchaser any change in material and method of manufacture and quality control shall be notified to Purchaser whose approval in writing of all such changes shall be obtained before the bends are manufactured.

8.4 Within four weeks from the approval date Manufacturer shall submit one reproducible and six copies of the documents as stated in para 8.3 of this specification.

8.5 Prior to shipment, the Manufacturer shall submit one reproducible and six copies of test certificates as listed in para 5.3 of this specification.

Edition : 1

SPECIFICATION
FOR
SPLIT TEE
(HOT TAP MATERIAL)

SPECIFICATION NO.: MEC/TS/05/21/011A

(OIL & GAS SBU)
MECON LIMITED
DELHI 110 092

CONTENTS

Sl.No.	Description
1.0	SCOPE
2.0	REFERENCE DOCUMENTS
3.0	MANUFACTURER'S QUALIFICATION
4.0	MATERIALS
5.0	DESIGN AND CONSTRUCTION REQUIREMENTS
6.0	INSPECTION AND TESTS
7.0	TEST CERTIFICATES
8.0	PAINTING, MARKING AND SHIPMENT
9.0	WARRANTY
10.0	DOCUMENTATION

1.0 SCOPE

This specification covers the basic requirements for the design, manufacture and supply of carbon steel split tees as hot tap material to be installed in pipeline system for handling hydrocarbons in liquid or gaseous phase.

2.0 REFERENCE DOCUMENTS

2.1 Reference has also been made in this specification to the latest edition of the following codes, standards and specifications :

a) ASME B 31.4 : Liquid Transportation Systems for Hydrocarbons, Liquid Petroleum Gas, Anhydrous Ammonia and Alcohols.

b) ASME B 31.8 : Gas Transmission and Distribution Piping System

c) ASME B 16.9 : Factory made wrought steel butt welding fittings.

d) ASME B 16.25 : But Welding Ends

e) ASME Sec. VIII : Boiler & Pressure Vessels Code-Rules for the construction of pressure vessels.

f) ASME Sec. IX : Boiler & Pressure Vessel Code-Welding & Brazing Qualifications.

g) ASTM A 370 : Mechanical Testing of Steel Products

h) MSS-SP-53 : Quality Standard for Steel Castings and Forgings for Valves, Flanges and fittings and other Piping components and - Magnetic Particle Examination Method.

i) MSS-SP-75 : Specification for High Test Wrought Butt Welding Fittings

j) API 1104 : Specification for Welding Pipeline and Related Facilities

k) SSPC-VIS-1 : Steel Structures Painting Council

2.2 In case of conflict between the requirements of this specification and any code, Standard and Specification referred in Clause 2.1 above. Order of precedence shall be as follows :

- Data Sheets
- This Specification
- Other Referred Codes & Standards
- Manufacturer's Standard.

3.0 MANUFACTURER'S QUALIFICATION

Manufacturer who intend bidding/ supplying for fittings must possess the successful past supply record of at least one Split Tee which is at least equal to or greater than the size and rating of Tee(s) being supplied. Size shall be considered as run size for the purpose of qualification.

4.0 MATERIALS

4.1 The basic materials required for manufacturing of split tees have been indicated in the data sheet. Other additional materials required for manufacturing split tees shall be as per manufacturer's standard suitable for the service conditions indicated in data sheet and shall be subjected to approval by Purchaser.

4.2 Fully killed Carbon steel shall be used in the manufacture of split tees.

4.3 Each heat of steel used for the manufacture of pressure containing parts of the flow tees shall have carbon equivalent (CE) not greater than 0.45 calculated from the check analysis in accordance with the following formula.

$$CE = C + Mn/6 + (Cr+Mo+V)/5 + (Ni +Cu)/15$$

Carbon content on check analysis shall not exceed 0.22%.

4.4 When specified in Data sheet, Charpy V-notch test shall be conducted for each heat of steel used in manufacture of split tee. Test shall conform to the provisions of ASTM A-370 and at a temperature of 0°C. The Charpy impact test specimen shall be taken in the direction of principal grain flow and notched perpendicular to the original surface of the plate or forging. The average impact energy values of three full sized specimens shall be 27 joules, unless indicated otherwise in the data sheets :

Minimum impact energy value of any one specimen of the three specimens analysed shall not be less than 80% of the average inpactenargy specified.

When Low Temperature Carbon Steel (LCTS) materials are specified in Datasheet or offered by Manufacturer, the Charpy V-notch test requirements of applicable material standard shall be complied with.

4.5 When specified in the data sheet, hardness test shall be carried out as per ASTM A 370 for each heat of steel used. A full thickness cross section shall be taken for this purpose and the maximum hardness of base metal, weld metal and HAZ of all pressure containing parts shall not exceed 248 $HV_{10,}$ unless otherwise specified.

5.0 DESIGN AND CONSTRUCTION REQUIREMENTS

5.1 Split tees shall be designed and manufactured in accordance with the provisions of codes and standards referred in Section 2.0 of this specification. Design factor and corrosion allowance indicated in data sheet shall be taken into account for design of split-tees.

5.2 Split tees shall generally conform to the figure shown in the data sheet and shall meet following requirements as minimum :

a) Sleeves shall be designed to meet pressure & reinforce requirements of ASME Codes.

b) Fittings shall be manufactured with controlled carbon equivalent for its welding in harsh out side environments.

c) Split tee shall be of full branch or reducing branch & meet the requirement for fittings with hot tap machine.

5.3 Butt weld ends shall be beveled as per MSS-SP-75/ B16.25.

5.4 Split tees shall be manufactured by hot drawn, full branch/ reduced branch opening, snug-fitting sleeve or fabricated full size nipple, branch outlet welded to snug-fittings sleeve.

5.5 All welds shall be made by welders and welding procedures qualified in accordance with ASME Section-IX. The welding procedure qualification test shall include charpy impact test and hardness test and shall meet the requirements of clause 4.4 and 4.5 of this specification respectively.

5.6 Repair by welding on parent metal is not allowed. Repair of welds shall be carried out only after specific approval by Purchaser's Representative for each repair. The repair welding shall be carried out by the welders and welding procedures duly qualified as per ASME Section-IX and records for each repair shall be maintained.

6.0 INSPECTION AND TESTS

6.1 The manufacturer shall perform all inspections and tests as per the requirements of this specification and the relevant codes, prior to shipment, at his works. Such inspection and tests shall be, but not limited to the following :

6.1.1 All split tee shall be visually inspected.

6.1.2 Dimensional checks shall be carried out as per the approved drawing.

6.1.3 Chemical composition and Mechanical properties shall be checked as per MSS-SP-75 and this specification for each heat of steel used.

6.1.4 Non destructive examination of individual split tees shall be performed as given below:

a) 100% inspection by radiography shall be carried out on all pressure containing welds on fittings. Acceptance limits shall be as per API 1104.

b) Welds which in Purchaser's Representative's opinion cannot be inspected by radiographic methods shall be checked by ultrasonic or magnetic particle methods. Acceptance criteria shall be as per ASME Section VIII Appendix-12 and Appendix-6 respectively.

c) All finished weld ends shall be 100% ultrasonically tested for lamination type defects for a distance of 50mm from the end. Any lamination larger than 6.35mm shall not be acceptable.

d) All forgings shall be wet magnetic particle examined on 100% of the forged surfaces. Method and acceptance shall comply with MSS-SP-53.

6.2 Purchaser's Representative shall also perform stagewise inspection and witness tests as indicated in clause 6.1 at manufacturer's works prior to shipment. Manufacturer shall give reasonable notice of time and shall provide without charge reasonable access and facilities required for inspection, to the Purchaser's Representative.

Inspection and tests performed/ witnessed by Purchaser's Representative shall in no way relieve the Manufacturer's obligation to perform the required inspection and tests.

7.0 TEST CERTIFICATES

7.1 Manufacturer shall submit following certificates to Purchaser's Representative :

a) Test certificates relevant to the chemical analysis and mechanical properties of the materials used for construction as per this specification and relevant standards.

b) Test reports on radiographic and ultrasonic inspection and wet magnetic particle examination.

c) Certificates for each split tee stating that it is capable of withstanding without leakage for a test duration of 15 minutes and test pressure which results in a hoop stress equivalent to 95% of the specified minimum yield strength.

d) Test reports on heat treatment carried out.

8.0 PAINTING, MARKING AND SHIPMENT

8.1 Split tees entire surface shall be thoroughly cleaned, freed from rust and grease and applied with sufficient coats of corrosion resistant paint, after all the required tests have been performed and accepted by Purchaser's Representative. The surface preparation shall be carried out by shot blasting to SP 6 in accordance with "Steel Structures Painting Council - Visual Standard - SSPC-VIS-1".

8.2 Manufacturer shall indicate the type & recommended coats of corrosion resistant paint used, in the drawing submitted for approval.

8.3 Split tees shall be marked with indelible paint with the following data :

a) Manufacturer's Name
b) Nominal diameter in mm D1 x D2
c) End thickness in mm T1 x T2
d) Material

8.4 Split tees shall be suitably protected to avoid any damage during transit. Metallic or high impact plastic bevel protectors shall be provided for weld ends.

9.0 WARRANTY

Purchaser will be reimbursed by Manufacturer for any Split tee furnished to this specification which fails under field hydrostatic testing and if such failure or non-performance is caused by a defect in the Split tees which is outside the acceptance limits of this specification. The reimbursement cost shall include cost of Split tee, labour and equipment rental for finding, excavating, cutting, and installation of replaced Split tee in position.

10.0 DOCUMENTATION

10.1 At the time of bidding, bidder shall submit the following documents :-

a) General arrangement drawing of split tees with overall dimensions and cross sectional drawings.
b) Reference list of previous supplies of split tees of similar specification with relevant details viz Project, Year of supply, Client, size, Rating and service for the last five years.
c) Clausewise list of deviation from this specification, if any.
d) Past track record of supplying the split tees as required.

e) Brief description of the manufacturing, heat treatment and quality control facilities of the manufacturer's work.
f) Quality Assurance Plan (QAP) enclosed with this tender duly signed, stamped and accepted.

10.2 Within two weeks of placement of order, the manufacturer shall submit four copies, of but not limited to, the following drawings, documents and specifications for approval.

a) Fabrication drawings and relevant calculations for pressure containing parts.
b) Calculation for fittings thickness.
c) Method of manufacture, welding procedure and heat treatment details.
d) Quality control Manual.

Once the approval has been given by Purchaser, any change in design, material method of manufacture shall be notified to Purchaser whose approval in writing of all changes shall be obtained before the Split tees are manufactured.

10.3 Within four weeks from the approval date Manufacturer shall submit one reproducible and six copies of the approved drawings, documents and specification as stated in clause 10.3 of this specification.

10.4 Prior to shipment, Manufacturer shall submit one reproducible and six copies of test certificates as listed in clause 7.0 of this specification.

10.5 All documents shall be in English Language.

STANDARD TECHNICAL SPECIFICATION FOR MUD MAT

SPECIFICATION NO.: MEC/TS/05/21/060

(OIL & GAS SBU)
MECON LIMITED
DELHI 110 092

PREPARED BY:	CHECKED BY:	APPROVED BY:	ISSUE DATE:
Rajnish Bajaj SDE, MECON LTD.	Harsh Kumar Manager, MECON LTD.	Amit Gangal DGM, MECON LTD.	June 2017

AMENDMENT STATUS

Sl. No.	Clause / Paragraph / Annexure / Exhibit / Drawing Amended	Page No.	Rev.	Date	BY		Verified	
					Name	Sig.	Name	Sig.

CONTENTS

Sl.No.	Description
1.0	SCOPE
2.0	ORDER OF PRECEDENCE
3.0	MATERIALS
4.0	DIMENSIONS
5.0	DESIGN
6.0	INSPECTION & TESTING
7.0	TEST CERTIFICATES
8.0	MARKING, PACKAGING AND SHIPMENT
9.0	DOCUMENTATION
10.0	GUARANTEE

1.0 SCOPE

This specification covers the minimum requirements for design, manufacture, testing and supply of Mud mats for use in construction of long distance cross-country pipeline projects.

2.0 ORDER OF PRECEDENCE

2.1 In case of any conflict, order of precedence shall be as follows :

- Data Sheets
- Material Requisition
- This Specification
- Other Referred Codes & Standards
- Manufacturer's Standard

3.0 MATERIALS

3.1 Material for major components of the Mud Mat shall be as indicated in the Data Sheet. Other components shall be as per Manufacturer's standard (suitable for the service conditions indicated in Data Sheet) and shall be subject to approval by Purchaser.

3.2 Virgin High Density Polyethylene shall be used for manufacturing Mud Mats.

4.0 DIMENSIONS

4.1 The dimensions of each supplied mat shall be as follows:
Min Actual Area per mat= Min. 2m x Min. 4m= Min. 8 sqm.
Min. Useable Area per mat– Min. 1.8m x Min. 3.8m = Min. 6.84 sqm
Min. Thickness- 9.4 cm

5.0 DESIGN

5.1 The mud mat should be anti-slip and should be able to provide traction over any type of terrain irrespective of type of vehicle & its condition. Mud Mat should be suitable for use without any ground preparation. However, limiting ground conditions in which the Mud Mat can be used is to be specified by Manufacturer.

5.2 Manufacturer to specify the specific set of ground conditions under which the mud mat requires layering. Such instructions are to be made part of operation manual.

5.3 The mud mat should be interlock-able with suitable locking arrangement (Locking pins/ flanges etc.). The requisite number of locking pins/ flanges etc. required for inter-connection shall be supplied along with the mats with 20% spares.

5.4 The mud mats should be UV resistant and have special impact modifier and nano clay filters to accommodate thermal expansion.

5.5 The mud mats should be chemical resistant and have anti-skid pattern.

5.6 The mud mats should be non-permeable and anti-absorbent.

5.7 Mud mat cross section is to be defined at the stage of tendering only. A sketch/ drawing showing the cross section is to be submitted along with offer.

5.8 The mud mats should have UL-94 HB flammability rating.

5.9 The mud mats should be anti-static. Manufacturer to indicate the provision for the same in the drawing/ sketch submitted to meet the requirement of cl. 5.7 above.

5.10 The mud mat should be repairable in field using commonly available adhesive/ repair material.

5.11 The mud mat should have the following mechanical properties:

	Requirement	Remarks
Minimum Compressive strength	40 Kg/cm2	
Tensile Modulus	>900 MPa	ISO 527-1
Tensile Stength	>22 MPa	ISO 527-1
Elongation at break	>400%	ISO 527-1
Shore Hardness	60-68	ISO 868

Temperature of usage	0 to +65 Deg C	

6.0 INSPECTION AND TESTS

6.1 The Manufacturer shall perform all inspection and tests as per the requirements of this specification, attached QAP and the relevant codes, prior to shipment, at his works. Such inspection and tests shall include, but not limited to, the following:

6.2 All mats shall be visually inspected. The surface of the mat shall be free from any cracks, gouges and any other detrimental defects. The surfaces shall be thoroughly cleaned and free from dirt, grease, oil and any other foreign material.

6.3 Dimensional check on all mats shall be carried out by the manufacturer. Measurement shall be done in metric units.

6.4 Chemical, Mechanical properties shall be checked as per relevant material standards, QAP and this specification, for each batch of material used.

6.5 Purchaser reserves the right to give waiver or perform stage-wise inspection and witness tests as indicated in approved QAP at Manufacturer's works prior to shipment. Manufacturer shall give reasonable access and facilities required for inspection to the Purchaser's Inspector. Purchaser reserves the right to require additional testing at any time to confirm or further investigate a suspected fault. The cost incurred shall be to Manufacturer's account. In no case shall any action of Purchaser or his Inspector relieve the Manufacturer of his responsibility for material, design, quality or operation of mud mat. Inspection and tests performed/ witnessed by the Purchaser's Inspector shall in no way relieve the Manufacturer's obligation to perform the required inspection and tests.

7.0 TEST CERTIFICATES

7.1 Manufacturer shall submit the following certificates:

a) Material test certificates relevant to the Chemical, mechanical properties of the materials used for manufacturing mud mats.
b) Test certificates of tests complete with records.
c) All other test reports and certificates as required by this specification & QAP. The certificates shall be valid only when signed by Purchaser's Inspector. Only those mats which have been given clearance (either by way of inspection release note

or inspection waiver) by Purchaser's Inspector shall be dispatched from Manufacturer's works.

8.0 MARKING, PACKAGING AND SHIPMENT

8.1 All mats shall be marked. The marking shall include, as a minimum following information.

a) Client's Name
b) Manufacturer's Name
c) Order Number
d) Material Grade
e) Mat Dimensions
f) Date of manufacturing
g) Unique serial number

8.2 Marking shall be done by die stamping/ indelible ink.

8.3 Suitable packaging shall be provided so as to avoid any damage to the mats during transit.

8.4 Following information shall be marked legibly with suitable marking ink on the packages.

a) Order Number
b) Client Name
c) Manufacturer's Name
d) Serial Numbers of all the mats in the packaging box

8.5 Shipment shall be done in ISO containers.

9.0 DOCUMENTATION

9.1 Within 1 (one) week of placement of order, the Manufacturer shall submit three copies of, but not limited to, the following drawings, documents and specifications for Purchaser's final approval:

a. Filled Data sheet
b. Proposed QAP in line with that given in tender document.
c. Other documents / drawings / data as per Material Requisition.

Manufacturing of mud mat shall commence only after approval of the documents indicated above. Once approval has been given by Purchaser, any changes in design, material and method of manufacture shall be notified to Purchaser whose approval in writing of all changes shall be obtained before the mud mat is manufactured.

9.2 Within 1 (one) week from the approval date, Manufacturer shall submit to Purchaser three copies of the approved drawings, documents and specifications as listed in clause 9.1 above. Prior to shipment, Manufacturer shall submit three hard copies and three soft copies (on CD-ROMs) of the following:

a. Test certificates.
b. Manual for installation, storage, handling and maintenance procedures.
c. Other documents / drawings / data as applicable.

9.3 All documents shall be in English language.

10.0 WARRANTY

10.1 Manufacturer shall provide minimum 18 months warranty against cracking, breaking, discoloration or any other manufacturing defects under normal use from the date of delivery at site.

10.2 Manufacturer shall guarantee that the materials comply with the requirements in this specification and in the Purchase Order.

10.3 Manufacturer is bound to replace or repair all mud mats which should result defective due to inadequate engineering or due to the quality of materials/ workmanship.

10.4 If mud mat defect or malfunctioning cannot be eliminated, Manufacturer shall replace the mud mat without delay.

10.5 Any defect occurring during the period of warranty shall be attended to by making all necessary modifications and repair of defective parts free of charge to the Purchaser as per the relevant clause of the bid document. All expenses related to repair of mud mats during warranty period shall be to Manufacturer's account.

TECHNICAL SPECIFICATION FOR CIVIL WORKS

GTS-05

GENERAL TECHNICAL SPECIFICATION

FOR

CIVIL WORKS

मेकॉन लिमिटेड
भारत सरकार का संस्थान

MECON LIMITED

(A Govt. of India Enterprise)

RANCHI – 834002 (JHARKHAND)

DOC. No. MEC.11.GTS-05 REV 0

© 2024 MECON Limited
All rights reserved

LIST OF CONTENTS

PART NO.	DESCRIPTION	PAGE NO.
PART - I	MATERIALS	3-48
PART - II	WORKMANSHIP	49-253
PART - III	NORMS OF CEMENT CONSUMPTION	254-269
PART - IV	DIMENSIONAL TOLERANCE	270-279
PART - V	METHOD OF MEASUREMENT	280-299
ANNEXURE-A	LIST OF IS & CODES REFERRED	300-312

© 2024 MECON Limited
All rights reserved

LIST OF CONTENTS (PART-I- MATERIALS)

SR. NO.	DESCRIPTION	PAGE NO.
1.0	**GENERAL**	5
1.01	SCOPE	5
1.02	STANDARD	5
1.03	APPROVAL AND TESTS	5-6
1.04	CODES	6
1.05	REJECTION OF MATERIALS	7
1.06	MATERIALS FOR CONCRETE	7-9
1.07	COARSE AGGREGATES	9-10
1.08	FINE AGGREGATES	10-11
1.09	TESTING OF SAMPLE	12-13
1.10	WATER	13
1.11	ADMIXTURES FOR CONCRETE	13
1.12	INTERVAL OF ROUTINE TEST	14
1.13	STEEL	14-17
1.14	ASBESTOS CEMENT PRODUCTS	18
1.15	BRICK AND STONES	18-19
1.16	STONES (GRANITE, TRAP, SANDSTONE AND QUARTZITE ETC.)	19-21
1.17	HOLLOW AND SOLID CONCRETE BLOCKS	21-22
1.18	HOLLOW BLOCKS(OPEN & CLOSED CAVITY)	22-23
1.19	CEMENT, LIME AND WATER	23
1.20	SAND FOR MASONRY MORTAR	23
1.21	SAND FOR PLASTERING	24
1.22	MATERIAL FOR FLOORING & PAVING	24-27
1.23	METAL DOORS, WINDOWS, VENTILATORS & ROLLING SHUTTERS	27-29
1.24	WATER PROOFING MATERIALS	29-31
1.25	PHYSICAL PROPERTIES	31-32
1.26	P.V.C. MEMBRANE/SHEET	32-33
1.27	PROPERTIES	33

© 2024 MECON Limited
All rights reserved

1.28	WATER BAR	33-34
1.29	LEAD	34
1.30	BUILDING PAPER	34
1.31	FILLING MATERIAL	34-35
1.32	DRAINAGE & SANITATION	35-38
1.33	CAST IRON (CI) MANHOLE COVERS AND FRAMES	38
1.34	WATER SUPPLY & PLUMBING	39-41
1.35	SHOWER ROSE	42
1.36	STORAGE TANK	42
1.37	MISCELLANEOUS ITEMS	42-43
1.38	ROAD	44-48

© 2024 MECON Limited
All rights reserved

01.0 GENERAL

01.01 SCOPE

This part deals with the requirements of materials for use in construction work with regard to quality, testing, approval and storage, before they are used on work. This part is supplementary to Part-II: Workmanship and Other requirements of the Technical Specifications for civil works.

01.02 STANDARD

A high standard of quality is required for all materials used in construction work. They shall be the best of the kind obtainable indigenously in each case and shall be procured from manufacturers of repute in order to ensure uniformity of quality and assurance of timely supply**.**

01.03 APPROVAL AND TESTS

01.03.01 All materials to be used in construction shall be subject to approval of the Engineer. The Contractor shall apply sufficiently in advance with samples of the materials including the supporting test results from the approved laboratory and other documentary evidence from the manufacturer wherever applicable and indicating the types of materials and their respective sources. The delivery of materials at site shall commence only after the approval of the quality, grading and sources of the materials by the Engineer.

01.03.02 The quality of all materials once approved shall be maintained throughout the period of construction and periodical tests shall be carried out to ensure that it is maintained. Such routine tests shall be listed under the different materials and/or as may be ordered by the Engineer from time to time.

01.03.03 Where a particular "Brand" or "Make" of material is specified in the Schedule of Items or Technical Specifications, such "Brand" or "Make" of material alone shall be used on the

© 2024 MECON Limited
All rights reserved

work. Should it become necessary for any reason (such as non- availability/ceased to be produced), to use any material other than the specified "Brand" or "Make", the Contractor shall submit sample of the same to the Engineer for approval together with test certificates and other documents necessary for examining and giving approval thereof. Should such change or substitution of materials, subsequently approved, results in use of material of price lower than that of the material specified in the Schedule of Items or Technical Specifications, the rates of work affected by the substitution shall be proportionately reduced. Similarly, in case the substitution results in use of material of price higher than that specified in the Schedule of Items or Technical Specifications, the rates of work affected by the substitution shall be proportionately increased.

01.04 CODES

01.04.01 The years of publication against various standards, referred in this specification, correspond to the latest standards as on date of preparation of this specification. During use of this specification in future, the latest publication as on date shall be referred to. Where standards are not yet published by the BIS or IRC, adoptable British Standards or other International Standards shall apply.

01.04.02 In case of any conflict in meaning between these specifications and those of BIS or IRC, or British /International Standard; the provisions of these specifications shall prevail.

© 2024 MECON Limited
All rights reserved

01.05 REJECTION OF MATERIALS

01.05.01 Any material brought to site which, in the opinion of the Engineer is damaged, contaminated, deteriorated or does not comply with the requirement of this specification shall be rejected.

01.05.02 If the routine tests or random site tests show that any of the materials, brought to site, do not comply in any way with the requirements of this specification or of I.S. Codes as applicable, then that material shall be rejected.

01.05.03 The Contractor at his own cost shall remove from site any and all such rejected material within the time specified by the Engineer.

01.06 MATERIALS FOR CONCRETE

01.06.01 AGGREGATES

Aggregates shall comply with the requirements of IS: 383-2016 "Coarse and Fine Aggregates for Concrete". They shall be hard, strong, dense, durable, clean and free from veins and adherent coating, vegetable matter and other deleterious substances; and shall be obtained from approved sources. Aggregates shall not contain any harmful material such as pyrites, coal, lignite, shale or similar laminated material, clay, alkali, soft fragments, sea shells and organic impurities in such quantity as to affect the strength or durability of concrete. Aggregates which are chemically reactive with alkalies of cement shall not be used. Aggregates which are not sufficiently clean shall be washed in clean fresh water to the satisfaction of the Engineer.

01.06.02 TESTING

All aggregates shall be subject to inspection and testing. The Contractor shall submit samples for testing as may be required by the Engineer. Sampling and testing shall be carried out in accordance with IS: 2386-1963 "Methods of

© 2024 MECON Limited
All rights reserved

Test for Aggregates for concrete".

01.06.03 GRADING

The Contractor shall ensure that the full range of aggregate used for making concrete is graded in such a way as to ensure a dense workable mix. The delivery of aggregates will commence only when the Engineer has approved the samples and the quality and grade shall be maintained consistent and equal to the approved sample. Before construction commences, the Contractor shall carry out a series of tests on the aggregates and on the concrete made there from to determine the most suitable grading of the available aggregates. Once the most suitable grading has been found, the grading shall be adopted for the construction of the works and periodic tests shall be carried out to ensure that it is maintained.

SIZE AND GRADING OF FINE AGGREGATES

The grading shall conform to IS: 383-2016 and shall be within the limits of Grading Zone-III. The maximum size of particle shall be 4.75mm and shall be graded down. Sand containing more than 10% of fine grains passing through 150 micron sieve or having the fineness modulus less than 2 shall not be used for concrete work.

SIZE AND GRADING OF COARSE AGGREGATES

The nominal maximum size of the aggregates for each mark of concrete or for each type of work shall depend upon the description of the particular item in the Schedule of Items and/or according to relevant clauses of IS: 456-2000. The aggregates shall be well graded and the grading shall conform to relevant requirements of IS: 383-2016 depending upon the maximum nominal size as specified or as required.

© 2024 MECON Limited
All rights reserved

FINE AGGREGATE FOR MORTAR AND GROUT

The grading of fine aggregate for mortar and grout shall be within the limits of grading zone III and IV as defined in IS: 383-2016.

01.06.04 STORAGE & STACKING

Care shall be taken in the storage to avoid intrusion of any foreign materials into the aggregates and where two types of aggregates are stored close to each other, they shall be separated by a wall or plate. In case of stockpiling, care shall be taken to avoid forming pyramids resulting in segregation of different sized materials. The height of the stacks shall be generally limited to 150 cm.

01.07 COARSE AGGREGATES

01.07.01 TYPES

The type of coarse aggregate viz., stone chips, gravel or broken brick shall be as described in the Schedule of Items. Unless otherwise specified in the Schedule of Items, stone chips shall be used as coarse aggregate.

01.07.02 STONE CHIPS

It shall be crushed or broken from hard stone obtained from approved quarries of igneous or metamorphic origin. The stone chips shall be hard, strong, dense, durable and angular in shape. It shall be free from soft, friable, thin, flat, elongated or laminated and flaky pieces and free from dirt, clay lumps, and other deleterious materials like coal, lignites, silt, soft fragments, and other foreign materials which may affect adversely the strength & durability of concrete. The total amount of deleterious /foreign materials shall not exceed 5% by weight according to relevant clause of IS: 383-2016. If found necessary the stone chips shall be screened and washed before use.

© 2024 MECON Limited
All rights reserved

01.07.03 GRAVEL

It can be either river bed shingle or pit gravel. It shall be sound, hard, clean, irregular in shape and suitably graded in size with or without some broken fragments. It shall be free from flat particles, powdered clay, silt, loam and other impurities. Before using, the gravel shall be screened and washed to the satisfaction of the Engineer. However, the foreign/deleterious materials shall not exceed 5% by weight.

01.07.04 BROKEN BRICKS / BRICK AGGREGATES

These shall be obtained by breaking well burnt or over burnt dense brick bats. They shall be homogeneous in texture, well graded in size, roughly cubical in shape, clean and free from dirt, clay, silt or any other deleterious matter. Before use, these shall be screened.

01.08 FINE AGGREGATES

01.08.01 UNLESS SPECIFIED OTHERWISE IT SHALL EITHER BE NATURAL RIVER SAND OR PIT SAND.

Sand shall be clean, sharp, strong, angular and composed of hard siliceous material. It shall not contain harmful organic impurities in such form or quantities as to affect adversely the strength and durability of concrete. Sand for reinforced concrete shall not contain any acidic or other impurities which is likely to attack steel reinforcement. The percentage of all deleterious materials including silt, clay etc., shall not exceed 5% by weight. If directed, sand shall be screened or washed before use to the satisfaction of Engineer.

01.08.02 CRUSHER DUST

Crusher stone dust (that is retained on 300 micron sieve) may be used as replacement for certain quantum of sand aiming to improve the fineness modulus of fine aggregate. The quantum of replacement for sand shall be arrived at by suitable trial mixes. The Engineer will

© 2024 MECON Limited
All rights reserved

decide the final usage of crusher dust depending on the circumstances.

01.08.03 LIME

Lime for mortars and concrete shall conform to IS: 712-1984 The total of CaO and MgO content in quick lime shall not be less than 85% (MgO shall not exceed 5%). Quicklime, after slaking, shall leave a residue of not more than 5% by weight on IS sieve 85.

01.08.04 SURKHI

Surkhi used in lime concrete for flooring, terracing etc., shall conform to IS: 3182-
1986. Surkhi shall be made from well burnt bricks or brickbats. Surkhi shall pass through I.S. sieve 3.35mm with at least 50 % of it passing through I.S. sieve
1.70mm and be perfectly clean and free from foreign matter. Surkhi shall not be made from bricks which have come in contact with any mortar.

01.08.05 CEMENT

Ordinary Portland cement / Portland slag cement complying with the requirements of IS:269-2015 and I.S. 455-2015 respectively shall be used for making plain and reinforced concrete, cement grout and mortar.

Other types of cement may be used depending upon the requirements of certain jobs with the approval of the Engineer. These shall conform to the following standards :

Portland Pozzolana	I	1489-2015
Rapid Hardening		IS:
43 Grade Ordinary	I	269-2015
53 Grade Ordinary		IS: 269-
Hydrophobic Portland		IS:

High alumina cement for structural work IS: 6452-1989
White portland cement IS: 8043-1991
Sulphate Resisting Portland Cement IS: 12330-1988

© 2024 MECON Limited
All rights reserved

01.09 TESTING OF SAMPLES

The Contractor shall supply a copy of the manufacturer's test certificate for each consignment of cement supplied by him and consignments shall be used on work in the order of delivery. The Contractor shall supply samples of cement to the Engineer as frequently as he may require for testing. The sampling of cement for testing shall be according to IS: 3535-1986. All tests shall be in accordance with the relevant clauses of IS: 4031 (Part-I to Part-15) 1988 to 1996 & IS: 4032-1985.

01.09.01 CONTRACTOR'S RESPONSIBILITY

From the time a consignment of cement is delivered at site and tested and approved by the Engineer until such time as the cement is used on the works, the Contractor shall be responsible for keeping the same in sound and acceptable condition and at his expense and risk. Any cement which deteriorates while in the Contractor's charge and is rejected as unsuitable by the Engineer, shall be removed from the site to outside the limits of work at the cost of contractor within two days of ordering such removal by the Engineer.

01.09.02 STOCK OF CEMENT

In order to ensure due progress, the Contractor shall at all times maintain on the site at least such stock of cement as the Engineer may from time to time consider necessary. No cement shall be used upon the works until it has been accepted as satisfactory by the Engineer.

01.09.03 STORAGE OF CEMENT

The cement shall be stored in such manner as to permit easy access for proper inspection and in a suitable weather-tight, well ventilated building to protect it from dampness caused by ingress of moisture from any source. Different types of cement shall be stored separately. Cement bags shall be stacked at least 15 to 20 cm clear of the floor leaving a space of 60 cm around the exterior walls. The

© 2024 MECON Limited
All rights reserved

cement shall not be stacked more than 10 bags high. Each consignment of cement shall be stacked separately to permit easy access for inspection.

01.10 WATER

Water used for mixing concrete and mortar and for curing shall be clean and free from injurious amounts of oil, acid, alkali, salts, sugar, organic materials or other substances that may be deleterious to concrete or steel. The pH value of water shall generally be not less than '6'. Water has to meet the requirements mentioned in clause 4.3 of IS: 456-2000. Water shall be obtained from an approved source.

Where it is obtained from a source other than a supply main, it shall be tested to establish its suitability. Water for construction purpose shall be stored in proper storage tanks to prevent any organic impurities getting mixed up with it.

01.11 ADMIXTURE FOR CONCRETE

01.11.01 APPROVAL

Admixtures to concrete shall not be used without the written consent of the Engineer. When permitted, the Contractor shall furnish full details from the manufacturer and shall carry out such test as the Engineer may require before any admixture is used in the work.

01.11.02 TYPES

INTEGRAL WATER PROOFER

Admixtures used as integral water proofer shall be free of chlorides and sulphates and shall conform to IS: 2645-2003. The application and doses shall be as per manufacturer's specification.

© 2024 MECON Limited
All rights reserved

01.12 INTERVAL OF ROUTINE TEST

The routine tests of materials, delivered at site, shall be at the following intervals : Aggregates - Fortnightly or for every 200 m3 for each aggregate whichever is earlier and in other respects generally as per IS : 2386 (Part 1 to 8)-1963.

Cement - Fortnightly or for each consignment, within 4 days of delivery and in other respects generally as per IS : 4031-1988.

Water - Once in two months for each source of supply and in other respects generally as per IS : 456-2000.

Reinforcement - For each consignment within 4 days of delivery in accordance with I.S. 1786-2008, I.S. 1599-2023 and I.S. 1608-2018.

01.13 STEEL

01.13.1 FOR REINFORCEMENT

Reinforcing bars for concrete shall be round steel bars of the following types as may be shown on the drawing :

i) Plain mild steel bars conforming to Grade-I of IS : 432-1982 "Mild Steel & Medium Tensile Steel for Concrete Reinforcement".

ii) "High strength deformed steel bars conforming to IS : 1786-2008 for
Concrete Reinforcement".

iii) Reinforcement fabrics conforming to IS:1566-1982 "Hard Drawn Steel Wire
Fabric for Concrete Reinforcement"

All reinforcement bars shall be of uniform cross sectional area and be free from loose mill scales, dust, loose rust, coats of paint, oil or other coatings which may destroy or reduce bond. Unit weight of reinforcement bars conforming to I.S. 1786 is as given below.

© 2024 MECON Limited
All rights reserved

Nominal Size (Dia) Run(mm)	Mass Per Metre (Kg)
6	0.22
8	0.39
10	0.61
12	0.88
16	1.58
18	2.00
20	2.47
22	2.98
25	3.85
28	4.83
32	6.31

01.13.02 BINDING WIRE

Binding wire for reinforcement shall be annealed steel wire 20 BWG conforming to IS : 280 -2006 "Specification for Mild Steel Wire".

01.13.03 LIGHT STRUCTURAL WORK AND INSERTS

Steel for light structural work and for preparation of inserts and embedments shall conform to IS: 2062-2011 "Steel for general structural purposes - Specification."

01.13.04 STEEL TUBES

Steel tubes for use in light structural work and inserts shall be of light or medium class (as may be specified in drawings or the schedule of items) and of grade YST 25 conforming to IS : 1161 - 2014 "Specification for Steel Tubes for Structural Purposes".

01.13.05 FOUNDATION BOLTS

Bolts to be embedded in concrete shall, unless otherwise detailed in drawings, conform to IS : 5624-2021 "Specification for Foundation Bolts". Material for bolts, shall, unless otherwise mentioned in drawings or the schedule of items, be of steel conforming to IS : 2062-2011.

© 2024 MECON Limited
All rights reserved

Nuts and locknuts shall conform to IS : 1363 (Part 1 to 3) - 2023-2018 "Specification for Black Hexagon Bolts, Nuts and Lock Nuts (Diameter 6-39 mm) and Black Hexagon Screws "**Specification for Hexagon Bolts and Nuts (M-42 to M-150)".**

Plain washers shall conform to IS : 2016-1967 "Specification for Plain Washers and spring washers shall conform to IS : 3063-1994 "Spring Washers for Bolts, Nuts & Screws".

01.13.06 STEEL TUBES FOR NON-STRUCTURAL USE

Steel tubes for non-structural use shall conform to IS : 1239 (Part-I) -2004 "Specification for Mild Steel Tubes, Tubular and Other Wrought Steel fittings, Part- I : Mild Steel Tubes".

Fittings for steel tubes used for non-structural purposes shall conform to IS : 1239 (Part-II) -2011 "Specification for Mild Steel Tubular and Other Wrought Steel Pipe Fittings".

01.13.07 THREADED FASTENERS

Bolts and nuts for fastening shall conform to IS:1367 (Part 1)-2014 "Technical Supply Conditions for Threaded Fasteners".

01.13.08 TESTING

Test certificates from manufacturer shall be submitted for each consignment. Any additional test which the Engineer may require shall be done according to IS :1786-2008, 1566-1982, 280-2006, 2062-2011, 1161-2014, 3063-1994, 1239 (Part 1 and 2)-2004 and 2011 and 1367-1980.

© 2024 MECON Limited
All rights reserved

01.13.09 CAST STEEL

QUALITY

Cast steel shall conform to IS : 1030-1998 "Carbon Steel Casting for General Engineering Purpose". Unless otherwise specified, it shall conform to Grade2.

01.13.10 CONDUITS

STEEL FOR ELECTRICAL WIRING

Rigid steel conduits for electrical use shall conform to IS:9537 (Part 2) - 1981 for rigid pipes and to IS : 3480-1966 for flexible conduits. Fittings for conduits shall conform to IS : 2667-1988.

All conduit pipes shall be finished with galvanised or stove-enamelled surface. All accessories shall be of threaded type and pipes shall be joint by means of screwed couplers only. Bend in conduits shall be made to the dimension shown in drawing, but a minimum of 12 times the diameter. Where shown in drawing they shall be treated with anticorrosive preservative as specified.

NON-METALLIC CONDUIT FOR ELECTRICAL WIRING

Non-metallic conduits for electrical use shall conform to IS : 9537 (Part 3) -1983 for rigid pipes and to IS : 9537 -1980 for flexible pipes. Fittings shall conform to IS:3419-1989.

Bends shall be achieved by bending the pipes by inserting suitable solid or inspection type normal bends, elbows or similar fittings.

© 2024 MECON Limited
All rights reserved

01.14 ASBESTOS CEMENT PRODUCTS-DELETED

01.15 BRICK AND STONES

01.15.01 BRICKS

Bricks for masonry in foundations, walls and other locations shall be common burnt clay building bricks having minimum crushing strength of 5 N/sq.mm., or such other strength as may be described in the Schedule of Items, when tested in accordance with IS : 1077-1992 "Common Burnt Clay Building Bricks". They shall be sound, hard and thoroughly well burnt, with uniform size having rectangular faces with parallel sides and sharp straight right angled edges and be of uniform colour with fine compact uniform texture. Bricks shall be of uniform deep red cherry or copper colour. They shall be free from flaws, cracks and nodules of free lime. Water absorption after 24 hours immersion in cold water shall be not more than 20% by weight. They shall not absorb more than 10% by weight of water after immersion for six hours. They shall emit a clear metallic ringing sound when struck by a mallet and shall not break when dropped on their face, from a height of 60 cm. Fractured surface shall show homogeneous, fine grained uniform texture, free from cracks, air holes, laminations, grits, lumps of lime, efflorescence or any other defect which may impair their strength, durability, appearance and usefulness for the purpose intended. Underburnt or vitrified bricks shall not be used. Samples of bricks brought to the site shall be tested periodically for compression and other tests according to IS : 3495 (Parts-1 to 4) -2019 "Method of Test for Burnt Clay Building Bricks". Where the size of bricks is not specifically mentioned, it shall be taken to mean conventional sizes as is commonly available in the area. In case modular bricks are to be used, it shall be accordingly specified in Schedule of Items. The bricks shall be classified on the basis of average compressive strength as given in table 1 of IS : 1077-1992.

© 2024 MECON Limited
All rights reserved

01.15.02 HANDLING

Bricks shall be unloaded by hand and carefully stacked and all broken bricks shall be removed from the site.

01.15.03 SAMPLES AND INSPECTION

Representative samples shall be submitted by the contractor and approved samples retained by the Engineer for comparison and future reference. Bricks shall be obtained from approved manufacturer. All bricks shall be subject to inspection on the site and shall be to the approval of the Engineer who may reject such consignment as are considered by him to be inferior to the quality specified. The Contractor shall provide all labour and plant required for the inspection and conduct such test as shall be required by the Engineer without additional charges.

01.15.04 BRICK BATS

Brick bats shall be obtained from well burnt bricks of approved quality.

01.15.05 LATERITE STONE BLOCKS

These shall conform to IS : 3620 -1979 "Laterite Stone Blocks for Masonry". The laterite stone blocks shall have a minimum compressive strength of 30 kg/cm2 and to be tested as per IS:1121-2023. The blocks shall be minimum 15 cm thick but not exceeding 30 cm. They shall be dressed to the desired sizes and shapes with an axe. Laterite stones shall be well seasoned by exposure to air before dressing and using on work.

01.16 STONE (GRANITE, TRAP, SANDSTONE, QUARTZITE ETC.)

01.16.01 Stone used shall be strong, durable, dense, compact, close grained, homogeneous, fire resistant and shall be obtained from sources approved by Engineer. Stones shall additionally be hard, sound, free from cracks, decay and other flaws or weathering and shall be easily workable. Stones with round surfaces shall not be made use of.

© 2024 MECON Limited
All rights reserved

01.16.02 Stones shall have a crushing strength of not less than 200 kg/cm2. Stones with lesser crushing strength may be used in works with prior approval of the Engineer. Stones shall be non-porous and when tested in accordance with IS : 1124 -1974 "Method of Test for Determination of Water Absorption Etc.," shall show water absorption of less than 5% of its dry weight when soaked in water for 24 hours. Tests for durability and weathering shall be done in accordance with IS : 1126-1974 and IS : 1125-1974 respectively. The working of stones to required sizes and their dressing shall be as per IS : 1127-1970 "Recommendations for dimensions and workmanship of natural building stones for masonry work" and IS : 1129 - 1972 "Dressing of Natural Building Stones". Stones especially limestone and sand stones shall be well seasoned by exposure to air before use in construction works.

01.16.03 SIZE

Normally stones shall be of size that could be lifted and placed by hand, between 20 to 30 kg per piece. The length of stones shall not exceed 3 times the height and the breadth on base shall not be greater than 3/4 of the thickness of wall or less than 15cm. The height of stone may be up to 30cm.

01.16.04 DRESSING

RANDOM RUBBLE

Stones shall be hammer dressed on the face, the sides, and the beds to enable it to come into close proximity with the neighbouring stone. The bushings in the face shall not project more than 4cm on all exposed faces and 2cm on a face to be plastered, nor shall it have depressions more than 1cm from the average wall surface.

COURSED RUBBLE - FIRST SORT

Face stones shall be hammer dressed on all beds, and joints, so as to give them approximately rectangular block shape. These shall be squared on all joints and beds. The

© 2024 MECON Limited
All rights reserved

bed joint shall be rough chisel dressed for at least 5cm back from the face, and side joints for at least 4cm such that no portion of the dressed surface is more than 6mm from a straight edge placed on it. The bushing on the face shall not project more than 4cm as an exposed face and one cm on a face to be plastered. The hammer dressed stone shall also have a rough tooling for a minimum width of 2.5cm along the four edges of the face of the stone, when stone work is exposed.

COURSED RUBBLE - SECOND SORT

Dressing shall be as specified in 5.6.4.2 except that no portion of dressed surface shall exceed 10mm from a straight edge placed on it as against 6mm for first sort. **Stone for veneering**

Stone lining up to 8cm shall be treated as veneering work. The stone shall be cut into slabs or required thickness along the planes parallel to the natural bed. Every stone shall be cut to the required size and shape so as to be free from any waviness and to give truly vertical and horizontal joints. Adjoining faces shall be fine chisel dressed to a depth of a 6mm, so that when checked with a 60cm straight edge, no point varies from it by more than 1mm. All edges shall be chisel dressed to be true, square and free from chippings. Top and bottom faces shall be dressed to within 3mm tolerance and vertical faces to within 6mm tolerance, when checked with a 60mm straight edge. Dressing at the back shall not be done.

01.17 HOLLOW AND SOLID CONCRETE BLOCKS

01.17.01 Cement concrete blocks used in the construction of concrete masonry load bearing as well as non-load bearing walls shall conform to the requirements of IS : 2185 (Part 1)-2005. Physical properties such as density, compressive strength, water absorption etc., shall be determined in accordance with the procedure laid down in IS : 2185 (Part 1) -2005 and shall conform to the requirement laid therein. When inspected visually all blocks shall be sound, free from

© 2024 MECON Limited
All rights reserved

cracks, broken edges, honeycombing and other defects which would interfere with the proper placing of blocks or impair strength or permanence of construction.

01.17.02 DIMENSIONS AND TOLERANCE

The blocks shall be made in sizes and shapes to suit the particular job and shall include stretcher, corner, double corner or pier, jamb, header, bullnose and floor units.
The nominal dimensions of concrete block shall be as follows:

Length	:	400, 500 or 600mm
Height	:	200 or 100mm
Width	:	50, 75,100, 150, 200, 250 or 300mm

In addition, blocks shall be manufactured in half and other suitable lengths and shapes to suit Architectural requirements.

The maximum dimensional tolerances shall be plus or minus 5mm in length and plus or minus 3mm in height and width.

01.18 HOLLOW BLOCKS (OPEN AND CLOSED CAVITY)

The blocks having solid material about 50% to 75% of total volume of the block calculated from the overall dimensions shall be termed as hollow blocks. Grade-A blocks used as load bearing units shall have a minimum block density of 1500 kg/m3 and shall have minimum average compressive strength of 3.5, 4.5, 5.5 or 7.0 N/mm2 at 28 days as specified.

Grade-B Blocks used as load bearing units shall have block density less than 1500 kg/m3, but not less than 1000 kg/m3 and shall have compressive strength of 2.0, 3.0, or 5.0 N/ mm2 or as specified.
Grade-C blocks used as non load bearing units shall have block density less than 1500 kg/m3, but not less than 1000 kg/m3 and compressive strength of 1.5 N/mm2 at 28 days.

© 2024 MECON Limited
All rights reserved

01.18.01 SOLID BLOCKS

The blocks having solid material more than 75% of the total volume of the be block shall be termed as solid block. Solid blocks (Grade-D) used as load bearing units shall have a block density of not less than 1800 kg/m3 and compressive strength of 4.0 or 5.0 N/mm2 as specified.

01.18.02 MIX PROPORTION

The concrete mix used for blocks shall not be richer than one part by volume of cement to six parts by volume of combined aggregates before mixing.

01.18.03 SURFACE TEXTURE AND FINISH

Surface texture, that is, very fine closed texture or coarse open texture and finish, whether coloured or not shall be according to the drawing, description in the Schedule of Items or instructions of the Engineer.

01.18.04 MARKING AND CERTIFICATE

The blocks shall be marked permanently indicating the Grade of the unit, identification of the manufacturer and the year of manufacture. Manufacturers test certificate shall be supplied with the delivery of each lot.

01.19 CEMENT, LIME AND WATER

Cement, lime and water shall conform to the specification under the Section Concrete of this part.

01.20 SAND FOR MASONRY MORTAR

Sand for masonry mortars shall be natural sand, crushed stone sand or crushed gravel and shall comply with IS : 2116 - 1980 "Sand for Masonry Mortars". The sand shall be hard, durable, clean and free from adherent coatings and shall not contain amount of clay, silt and fine dust more than 5% by wt. Sand shall not contain any harmful

© 2024 MECON Limited
All rights reserved

impurities such as iron pyrites, alkalies, salts, coal, mica and organic matters. The particle size grading of sand for use in mortars shall be within the limits as specified in Table I of above code.

01.21 SAND FOR PLASTERING

Sand for use in mortars for internal wall, ceiling and external plastering and rendering shall conform to IS:1542 -1992. It shall not contain any harmful impurities such as iron pyrites, alkalis, salts, coal, mica and organic matters. Percentage of salt and dust shall not be more than 5% by weight. Grading of sand shall be within the limits specified in clause no. 5.1 of above code. Fineness modulus of naturally occuring sand shall not be less than 1.5.

01.22 MATERIALS FOR FLOORING & PAVING

01.22.01 CEMENT AND BINDERS

CEMENT

Cement, fine aggregates, reinforcement and water used shall comply with the requirements of concrete as per clauses 2.1, 2.3, 2.6 and 2.7 of this part.

01.22.02 WATER

Water for construction shall be clean, soft, free from loam, salt and organic materials. Hard water shall not be used.

01.22.03 AGGREGATES

COARSE AGGREGATE

Coarse aggregate shall conform to the requirement as per clauses 2.1 and 2.2 of this part.

For granolithic floor the screeded bed shall comprise of aggregates size 15mm and down graded and topping shall

© 2024 MECON Limited
All rights reserved

comprise of clean fine stone chippings, size 4mm and down. For concrete floor with hardener treatment the topping shall comprise of stone chippings, size 6mm and down and for in-situ terrazzo flooring, chippings shall be within sizes 12mm to 6mm graded. The marble chips for topping of terrazzo floor shall be of 3-6mm size and shall conform to Grade-I of IS : 2114-2018 "CP for laying in-situ terrazo floor finish".

COMMON BURNT CLAY BRICKS

Common burnt clay bricks shall conform to IS : 1077-1992 and comply with requirements under the section "Brick and Stones" of this part.

RUBBLE

Rubble of approved quality shall be used and shall be clean and free from dirt. The loose and weathered sections shall be removed before use. Rubble used as hard core shall have a least lateral dimension (thickness) between 100mm and 225mm, depending on the thickness of hardcore.

01.22.04 PIGMENTS

Pigments incorporated in mortar or used for grouting shall be subject to approval of Engineer and as per table I of IS : 2114-2018.

01.22.05 RED OXIDE OF IRON

Red oxide of iron where used for "Red Artificial Stone Flooring" shall be of quality approved by the Engineer, and shall be of uniform tint.

01.22.06 HARDENING AGENTS

Hardening agents such as ironite used for "Cement Concrete Flooring with Hardener Treatment", shall be of quality approved by the Engineer for every work.

© 2024 MECON Limited
All rights reserved

01.22.07 DIVIDING STRIPS

Dividing strips shall be of aluminium, glass, brass, copper, plastic or similar materials as specified in the schedule of item and of quality approved by the Engineer. Strips shall be 1.5 mm thick unless otherwise specified penetrating to the full depth of the flooring. Aluminium strips when used shall have a protective coating of bitumen.

01.22.08 MARBLE CHIPS

It shall be in sizes varying from 1mm to 25mm and in different colours as per requirement. Marble chips shall be hard, sound, dense and homogeneous in texture with crystalline and coarse grains. It shall be uniform in colour and free from cracks, stains, decay and weathering and shall be obtained from approved source.

01.22.09 MARBLE POWDER

It shall be clean, free from dust and other foreign materials and of approved quality, obtained from approved source. It shall pass through sieve 300 conforming to IS:460- (Part-1)-2020.

01.22.10 FAN LIGHT CATCH

These shall be made of mild steel, cast brass, aluminium alloy or as specified and shall generally conform to IS : 364-1993. Steel springs of the catch shall be 0.90 mm dia, 6 coils, 12 mm internal diameter and 20 mm long. The pattern and the shape of the catch shall be as approved by the Engineer.

01.22.11 STEEL FRAMES

These shall conform to IS:4351-2003. The frames shall be manufactured from commercial mild steel sheets of 1.25mm thickness and are suitable for door shutters 30 to 40mm thick. The door frames are designated as per profile A, B and C.

© 2024 MECON Limited
All rights reserved

	Profile A Size 105x60mm : Profile B Size 125x60mm : Profile C Size 165x60mm :	rebated for one set of shutters rebated for one set of shutters rebated for two sets of shutters.
01.32.13	**Miscellaneous Items : Putty**	

The material shall be homogeneous paste and shall be free from dust and other visible impurities. Putty shall conform to IS : 419-2023 for wood work.

01.23 METAL DOORS, WINDOWS, VENTILATORS AND ROLLING SHUTTERS

01.23.01 GENERAL

Materials used in the fabrication of doors, windows, and ventilators shall be the best procurable and conforming to relevant Indian Standards.

01.23.02 STEEL DOORS, WINDOWS AND VENTILATORS

Steel sections used for fabrication of doors, windows and ventilators shall be standard rolled steel sections specified in IS : 1038, IS : 1977, IS : 1361 or IS : 7452 year 1983, 1975, 1978 and 1990 respectively as appropriate or as specified in drawing and Schedule of Items. Rivets shall conform to IS : 1148-2009.

© 2024 MECON Limited
All rights reserved

01.23.03 STEEL ROLLING SHUTTERS, ROLLING GRILLS

These shall conform to IS : 6248-1979.

01.23.04 M.S. BOLTS ETC.

M.S. bolts, nuts, screws, washers, peg stays and other mild steel fittings shall be treated for corrosion. Putty for glazing shall conform to IS : 419-2023. Glass panes and glazing shall conform to the specification detailed under this series.

01.23.05 Hardware and fixtures shall be as specified in the drawings or Schedule of Items.
All hardware and fixtures shall be able to withstand repeated use. Door closers shall be suitable for doors weighing 61 to 80 kg, unless otherwise stated. Each closer shall be guaranteed against manufacturing defect for one year and any defect found within this period shall be rectified or the closer replaced free of charge. Concealed door closers shall be either floor mounted or transom mounted, suitable for installation with metal doors. It shall conform to the performance requirements and endurance test stated in IS : 3564 1986 Appendix-A.

01.23.06 CREOSOTE OIL OR COALTAR CREOSOTE

It is primarily used for preservation of wood. It shall be a homogeneous liquid and shall liquify completely on being warmed to 38 degree C with stirring and shall remain liquid on cooling down to 32 degree C and on standing at that temperature for 2 hours.

The material shall conform to IS : 218-1983. All persons handling the creosote oil should be fully aware of the hazards involved in handling . Skin should be protected from coming in direct contact and eyes should be protected by using safety goggles while handling the material.

© 2024 MECON Limited
All rights reserved

01.23.07 COALTAR BLACK PAINT

Coaltar paint film protects surfaces by serving as a barrier against the action of moisture and other corrosive agents. Coaltar black paint is generally used as a protective and anti corrosive paint of iron and steel as well as protection of other building surfaces. For this it has to be applied under proper condition and on suitably prepared surface. Coaltar should be applied by brush only and is not recommended for locations which are not likely to be well ventilated. Coaltar paint shall conform to IS : 290 1961.

The material is of two types : Type A Quickly drying and Type B Slow drying. It shall be a homogenous black solution type paint consisting of a base prepared by blinding suitable grades of Coltar pitch, washed free from ammoniacal liquor, tar acid bases etc. Consistency, permeability, thickness and surface preparation etc. shall be as per para 5 and A-2 of the above code.

01.24 WATER PROOFING MATERIALS

01.24.01 INTEGRAL CEMENT WATERPROOFING COMPOUNDS

Integral cement waterproofing compounds, i.e. admixture for waterproofing purposes shall fully comply with the requirements of IS : 2645-2003. Properties like permeability, setting time, compressive strength shall be in accordance with the requirements of this code when tested as per procedure laid therein. Calcium chloride content of the product used shall be made known to Engineer before use.

01.24.02 BITUMEN

The bitumen bonding material for waterproofing shall conform to the requirements laid down in IS : 702-2022 or IS : 217- 2018 depending upon whether industrial bitumen, paving bitumen or cutback bitumen is used. For selecting the particular type and grade of bitumen to be used the relevant item in Schedule of Items shall be referred to.

© 2024 MECON Limited
All rights reserved

01.24.03 BITUMEN PRIMER

Bitumen primer used for application to concrete and masonry surfaces and bitumen for the purpose of waterproofing shall conform to requirements given in IS : 3384-1986 and pass tests in accordance with the procedure laid down in appropriate IS mentioned in Table-I of IS : 3384-1986. Bitumen primer should be free from water and shall preferably ;be made from the same grade of bitumen as used in bonding.

01.24.04 BITUMEN FELT

Bitumen felts used for water proofing purposes shall be as specified in IS: 1322-1993. Physical properties shall conform to the requirements and tests shall be carried out as per procedure laid down in IS :1322- 1993. Base, (whether fibre or Hessian), type and grade of felt shall be as mentioned in the relevant items under Schedule of Items. Unless otherwise stated, hessian base felt Type-3, Grade-2 shall be used.

01.24.05 BITUMEN MASTIC

Bitumen mastic used for water proofing of roofs shall have the physical properties as mentioned in IS : 3037-1986 when tested with the procedure laid down in appropriate IS mentioned in IS : 3037-1986.

01.24.06 BITUMINOUS COMPOUNDS

Bituminous compounds when used for waterproofing of porous masonry, concrete floors, walls and roofs shall conform to the requirements of IS : 1580-1991. Physical properties shall be governed by the requirements of this code when tested in accordance with the procedure laid therein.

© 2024 MECON Limited
All rights reserved

01.24.07 SURFACE APPLICATION MATERIALS

Waterproofing material for application on mortar or concrete surface shall conform to IS: 9862 2017. The primer shall be suitable for spray or brush application. It shall have properties enabling it to penetrate through pores or cracks and fill them up, making the surface impervious.

01.24.08 POLYMER BASED PAINTS

The materials used shall be high polymer based chloride and sulphide free cement and waterproofing additions and epoxy based waterproofing paints as per manufacturer's specification and approved by Engineer.

01.24.09 FIBRE GLASS R. P. Tissue

The fibre glass R.P. tissue is a thin flexible uniform mat, composed of glass fibre in an open porous structure bonded with a suitable inert material compatible with coal tar, asphaltic enamel and oil plastic based wall paint. The fibrous glass mat is reinforced with continuous filament glass yard at 3/8" (10mm) pitch in the longitudinal direction.

01.25 PHYSICAL PROPERTIES

i) Weight
The average weight of fibre glass R.P. tissue shall not be less than 50 gms/sq.sm.

ii) Thickness
The fibre glass R.P. tissue shall have a thickness not less than 0.4mm.

iii) Tear Strength
The tear strength shall be not less than 900 grams in the transverse direction.

iv) Breaking Strength

© 2024 MECON Limited
All rights reserved

This shall have a minimum breaking strength of 13 lb/in (2.32kg/cm) in the longitudinal direction.

v) Porosity
This shall have a porosity when related to pressure difference across the sample of not less than 0.022" (0.56mm) and not more than 0.76" (1.92mm) of water guage at an air velocity of 200fpm.(100cm/sec.).

vi) Pliability
There shall be no cracking of the tissue mat when bent over a 1/8" (3.2mm) radius after immersing for 10-15min. through a 90 degree arc.

vii) Temperature
The fibre glass tissue shall be Resistance under a load of hot bitumen at 530 degree F (276 degree C) for one minute.

01.25.01 PRIMER

Primer shall conform to requirements laid down in IS : 3384-1986. It is to be prepared by blending turpentine and blown grade bitumen in the ratio of 60:40 by weight.

01.25.02 BLOWN MATERIALS

Blown grade bitumen shall be conforming to IS : 702-2022 and residual grade bitumen conforming to IS:73 respectively. This shall be prepared by heating to correct working temperature.

01.25.03 SURFACE FINISH

Pea sized gravel/grit 6mm and down.

01.26 P.V.C. MEMBRANE/SHEETS

Polyvinyl chloride sheets for the purpose of water proofing and other underground use are specially developed sheets made from the compounded resin of grade MP/DP/CR-02

© 2024 MECON Limited
All rights reserved

and shall be resistant to the passage of gross water and water vapour. It shall be corrosion resistant and resistant to a wide range of acidic and alkali reagents, saltpetre action, salt water and ultra violet rays etc. PVC sheets manufactured by approved and reputed firms shall only be used

The sheets shall consist of Knobs or Lugs jutting out of the sheets in a grid fashion so as to provide a perfect grip in the mortar and concrete. Sheet thickness, spacing of the knobs and their projection from the sheet shall be as specified in the item. The sheets shall be of maximum practicable length and width unless otherwise specified.

The adhesive used for jointing shall be of approved quality and of grade C-02. The sample of the material shall be got approved before use.

01.27 PROPERTIES

i)	Chemical Composition	:	Resin Plasticiser Inhibitor Stabiliser UV Barrier.
ii)	Thickness	:	Not less than 0.25 mm
iii)	Rupture/Tensile Strength	:	Not less than 225Kg/cm2
iv)	Adhesive bond Strength [width]	:	Not less than 7.1 Kg/cm
v)	Elongation at Break	:	130%

01.28 WATER BAR

01.28.01 GENERAL

Water bar for use in construction/expansion joints in concrete and reinforced concrete structures shall be of copper sheet, galvanised steel sheet, rubber or PVC as shown in drawing or described in the Schedule of Items. It shall be subject to approval of Engineer.

© 2024 MECON Limited
All rights reserved

01.28.02 JOINTING

The water bar shall have dimensions as shown in drawing. Where water bars are required to be lengthened or otherwise jointed the joining shall be done in such a way as to achieve a perfectly watertight joint.

01.29 LEAD

01.29.01 GENERAL

Lead for joints in cast iron spigot and socket pipes shall be melted from pure soft pig lead conforming to Type-I of IS : 782-1978. "Caulking Lead". Where lead wool is allowed for caulking, it shall be equal to or better than Type-II of IS : 782-1978. Lead flashing shall conform to IS : 405 Part I&II-1992.

01.30 BUILDING PAPER

01.30.01 Building paper shall be bitumen impregnated paper conforming to IS: 5134 1977, or such other as may be approved by the Engineer.

01.31 FILLING MATERIAL

01.31.01 GENERAL

Filling material shall conform to what is shown in drawing, described in the Schedule of Items or otherwise directed by the Engineer. Earth or sand for filling under floors shall correspond to those described elsewhere in these specifications.

01.31.02 Mastic Bitumen

Mastic Bitumen shall conform to IS : 3037-1986 or IS : 5871-1987 as appropriate.

© 2024 MECON Limited
All rights reserved

01.31.03 FLEXIBLE BOARDS

Flexible boards for use in expansion joints shall correspond to the description given in drawing or the Schedule of Items or the instruction of Engineer.

01.32 DRAINAGE & SANITATION (INTERNAL)

01.32.01 GENERAL

All materials, pipes, specials, fittings, fixtures etc., to be used in the works shall be of best quality and class specified in relevant IS Code. Where specified these shall be of specific manufacture and quality and shall be procured from manufacturer or their accredited stockists and be marked with manufacturers' names and trade mark. Contractor shall submit to the Engineer samples of all materials, pipes, specials, fittings fixtures for approval before use in the works. Such approved samples shall be retained by the Engineer till completion of works. Pipes and Spe- cials may be any or combination of following types:-

i) PVC Pipes
ii) Stone Ware Pipes
iii) Sand Cast Iron Pipes for soil waste & Ventilation
iv) CI Pipes for rain water
vi) R.C.C Pipes

01.32.02 HIGH DENSITY PVC PIPES AND FITTINGS

This shall conform to IS : 4984-2016 and IS : 8008 (Part 1 to 7)-2003 unless otherwise specified.

01.32.03 PVC WASTE PIPE

This shall conform to IS : 4985-2021 unless otherwise specified.

© 2024 MECON Limited
All rights reserved

01.32.04 STONEWARE PIPES & FITTINGS

All stoneware pipes, bends, gully traps and sewer traps shall be of the best salt glazed variety inside and outside, hard burnt dark grey colour, perfectly sound, free from fire cracks and imperfection of glaze, truly circular in cross section, perfectly straight, of standard nominal length and depth of socket and barrel.
These shall be of approved manufacture and shall comply with the requirement of IS: 651-2007. These pipes shall be of grade AA unless otherwise specified.

01.32.05 SAND CAST IRON PIPES & Fittings Conforming to IS : 1729-2023

All soil waste and vent pipes and fittings used in the work shall be cast iron and shall conform to IS: 1729-2023. The pipes shall have spigot and socket ends, with bead on spigot end and shall be with or without ears. The pipes shall be free from cracks and other flaws. The interior of the pipe and fittings shall be clean, smooth painted inside and outside with DR Angas smiths solution or other approved anti- corrosive paint.

The standard weights and thickness of pipe shall comply with the requirements of IS: 1729-2023. The tolerance on wall thickness and weight shall be minus 15 percent and minus 10 percent respectively. Pipes weighing more than the nominal weight given below may be accepted provided they comply in every other respect.

Nominal size	**Weight per piece in Kg. excluding**		
	1500 mm	**1800 mm**	**2000 mm**
50	9.56	11.41	12.65
75	13.83	16.52	18.37
100	18.14	21.67	24.15
150	26.70	31.92	35.66

Specials and Fittings shall include bends, offsets, branches of various types, junctions etc., as required for the work which shall be provided according to drawings

© 2024 MECON Limited
All rights reserved

and directions of the Engineer. B.M. trap shall have water seal as per I.S. provisions.

The specials and fittings shall be provided with access doors where so specified or directed by the Engineer. The access door fittings shall be of proper design so as not to form cavities in which the filth may accumulate. Doors shall be provided with 3 mm thick rubber insertion packing, and when closed and bolted they shall be water tight. The access doors shall have MS studs and bolts or screws or bolts and nuts.

01.32.06 CAST IRON PIPES: RAINWATER PIPE

01.32.06.01 Pipes shall be of approved manufacture, true, smooth and cylindrical, their inner and outer surfaces being as nearly as practicable concentric and shall conform to IS : 1729-2023. These shall be sound and uniform casting, free from laps, pin holes or other imperfections and shall be neatly finished inside and outside. The ends of pipes shall be reasonably square to their axis.

01.32.06.02 DIMENSIONS

CI rain water pipes shall be of the dia specified in the description of the item and shall be in full lengths of 1.8 metres including socket ends of the pipes, unless shorter lengths are required at junctions with fittings. The pipe lengths shall in each case be with sockets. The pipes shall be supplied without ears unless otherwise specifically mentioned.
The pipes supplied shall be factory painted with a tar based composition both inside and outside which shall be smooth and tenacious unless specified otherwise.

Every pipe shall ring clearly when struck all over with a light hand hammer. When shorter pipes are cut from full lengths they shall be cut with a hacksaw.

Where the pipes are to be embedded in masonry they shall be of Class of pipes as are used for soil and vent pipes. For

© 2024 MECON Limited
All rights reserved

the weights of different sizes of these pipes, the specifications under SCI and vent pipes may be referred to.

01.32.06.03 A.C. pipes and fittings the pipes and fittings shall be of approved manufacture and shall conform to IS:1626. These shall be homogeneous and free from cracks and other defects. The pipes shall be straight, smooth and regular in thickness.

The diameter of the pipe shall be as specified. The fittings like heads, bends of different degrees, offsets of different projections, shoes and junctions shall be of the type, diameter and size as required for the work. The pipes shall be used in full lengths as far as possible.

01.33 CI MANHOLE COVERS & FRAMES

These shall be of light or medium duty (LD or MD) as specified in Schedule of Items and of cast iron with raised chequered design, lifting key and key hole and shall be coated with black bituminous base material,. Light duty covers and frames shall be of either rectangular type, single seal, pattern 1 and 2 having minimum weight of cover and frame 38 Kg and 25 Kg. respectively or with double seal, minimum weight of cover and frame being 52 Kg. These may be of square type also. Single seal with clear openings of 455 and 610 mm with minimum weight of cover and frame being 20 Kg and 38 Kg respectively, double seal of same openings shall have minimum Wt. of cover and frame 30 Kg and 55 Kg respectively. Medium duty covers and frames shall be either of circular type with 500 and 560 mm clear openings and minimum Wt. of cover and frame 116 Kg and 128 Kg respectively or of rectangular type with minimum Wt. of cover and frame 144 Kg.

The C.I. manhole covers and frames shall conform to IS : 1726-1991.

© 2024 MECON Limited
All rights reserved

01.34 WATER SUPPLY & PLUMBING (INTERNAL)

01.34.01 General

This section deals with the specification of material for pipes, fittings, fixtures etc., to be used in water supply works.

All materials, pipes, fittings, fixtures to be used in the works shall be of the best quality and of the class specified in various clauses herein under. Where specified these shall be of specific manufacture and quality and shall be procured from the manufacturer or their accredited stockist and be marked with manufacturers name and trade marks. The Contractor shall submit to the Engineer samples of all pipes, fittings, fixtures for approval before being used in the works. Such approved samples shall be retained by the Engineer till completion of works.

Pipes and pipe fittings may be of any or combination of following types:

i) Wrought iron galvanised pipe
ii) PVC pipes
iii) Cast iron pipes
iv) Steel pipes coated with bitumen composition inside and galvanised outside.
v) Reinforced concrete pipes
vi) Pre-stressed concrete pipes
vii) Lead pipe (not to be used for potable water)

01.34.02 GALVANISED IRON PIPES AND FITTINGS

Generally pipes for installations in buildings shall be medium quality malleable steel galvanised pipe 'B' class for cold water supply and 'C' class for hot water supply, having threaded ends with socket at one end.

The details of standard medium quality "B" class pipes and sockets regarding nominal bore thickness and weight in kg/m are given below:-

© 2024 MECON Limited
All rights reserved

Pipe Dia (Nominal Bore)	Dimension of Pipe		Thick-ness	Dimension of ordinary socket		Wt. of Pipe plain end
	Max. (outside dia)	Min.		Outside dia (approx.)	Min. length	
mm	mm	mm	mm	mm	mm	Kg/m
15	21.8	21.0	2.65	26.90	34	1.21
20	27.3	26.5	2.65	33.70	36	1.57
25	34.2	33.5	3.25	42.00	43	2.42
32	42.9	42.0	3.25	51.00	48	3.11
40	48.8	47.9	3.25	57.00	48	3.59
50	60.8	59.7	3.65	70.00	56	5.07
65	76.6	75.3	3.65	88.00	65	6.49
80	89.5	88.0	4.05	101.60	71	8.43

Note :- Manufacturing tolerances shall be permitted on tubes and sockets in addition to above as per IS : 1239 (Part 1&2) 2004 to 2011.

The galvanised iron pipes shall be of approved make and conform to IS:1239 (Part 1&2) 2004 to 2011 and of tested quality. The GI pipes shall be of threaded ends with a socket at one end only. The fittings for GI pipes shall be either galvanised wrought iron or galvanised malleable iron.

01.34.03 R.C.C, PRESTRESSED PIPES AND FITTINGS

These shall be of approved manufacture and quality and shall conform to IS : 458 2021, IS : 1592 2003, IS : 9627 1980 & IS : 784 2019 respectively.

01.34.04 CAST IRON PIPES AND FITTINGS

The cast iron pipes shall be of approved manufacture and quality and shall conform to IS: 1536 2023"Centrifugally Cast (Spun) iron pressure pipe and/or IS: 1537 2023". Vertically Cast Iron pressure pipe for water, gas and sewage. CI fittings shall conform to IS : 1538 (Part 1 to 23) 1993.

© 2024 MECON Limited
All rights reserved

01.34.05 STEEL PIPES

This shall conform to IS: 1239 (Part 1&2) (2004 to 2011) and IS : 3589- 2001. Steel pipes shall be coated with bituminous composition inside and galvanised outside.

01.34.06 BIB TAP AND STOP TAP

Bib tap and stop tap for water services shall be of brass screw down type and shall conform to IS: 781. Minimum finished weight of bib and stop taps shall be as given below:

No. of size Stop tap	Bib taps	
(mm)	(kg)	(kg)
1	0.3	0.3
1	0.4	0.4
2	0.7	0.7
2	1.2	1.3
3	-	1.8
4	-	2.2
5	-	3.8

The taps shall be tested under internal hydraulic pressure of at least 20 kgf/cm2 and maintained at the pressure for a period of at least two minutes during which period it shall neither leak nor sweat.

01.34.07 VALVES

Unless otherwise mentioned in the Schedule of Quantities these shall be copper alloy gate, globe and check valve of nominal sizes 8 to 100mm and shall conform to IS : 778 1984. Valves shall be of class 1 and class 2, suitable upto a temp. of 45 degree C and can sustain non shock working pressure upto 1.0 and 1.6 MPA respectively. They shall have screwed or flanged ends. All the metal parts shall be of brass/brass alloy except hand wheel of Cast Iron or other approved quality.

© 2024 MECON Limited
All rights reserved

01.35 SHOWER ROSE

The shower rose shall be of heavy quality chromium plated brass with flat bottom, of diameter 100 mm or as specified with uniform perforations.

01.36 STORAGE TANK

Storage tank shall be either pressed steel, Galvanised iron, R.C.C or PVC of specified sizes, capacities, make, manufacture as specified in Schedule of Items. It shall have facilities for connecting inlet, outlet overflow and washout pipes and a top cover. Where tanks are to be fabricated by the Contractor the fabrication/R.C.C detailed drawings shall be got approved by Engineer.

01.37 MISCELLANEOUS ITEMS

01.37.01 EXTERNAL SEWERAGE & DRAINAGE

Unless otherwise specified CI pipe and specials, caulking lead, SW pipe, RCC pipe shall conform to the following.

01.37.02 C.I. PIPES

C.I. pipe shall conform to IS : 1536 - 2023 or/and IS : 1537 – 1976 of class as specified in Schedule of Items.

C.I. pipe fittings shall conform to IS : 1538 (Part 1 to 23) - 1993 as specified in Schedule of Items.

Bolts and nuts shall be hexagonal bolts and nuts conforming to IS : 1363 (Part 1 to 3) - 2023.

01.37.03 WASHERS

Spring washers conforming to IS : 3063 - 1994 shall be used near the pumps to take care of vibration. In other places plain washers conforming to IS : 2016 - 1967 shall be used.

© 2024 MECON Limited
All rights reserved

01.37.04 GASKETS

Gaskets shall be reinforced rubber sheet or compressed fibre board conforming to IS : 638 - 1979 of thickness between 1.5mm to 3mm or as specified.

01.37.05 CAULKING LEAD

Lead for the spigot and socket joints shall conform to IS : 782 - 1978.

01.37.06 SALT GLAZED STONE WARE PIPES

Salt glazed stone-ware pipes used shall conform to IS : 651 - 2007 and shall be laid as per IS : 4127 - 2023. The pipes shall be of grade AA unless otherwise specified.

01.37.07 STEEL PIPES

Steel pipes and fittings used for encasing shall conform to IS : 1239 (Part 1&2) - 2004 to 2011 medium Class upto 150 mm dia and as per IS : 3589 - 2001 for pipes of dia 200 mm and above. For pies of dia 200 mm and above fittings, if required shall be fabricated from pipes itself.

01.37.08 CAST IRON MANHOLE COVERS & FRAMES

These shall be of medium or heavy duty (M.D. or H.D.) as specified in Schedule of Item and of Cast Iron with raised chequered design, lifting key and key hole and shall be coated with black bituminous base material. Medium duty covers and frames shall be either of circular type with 500 mm clear opening and minimum weight of cover and frame 116 Kg and 128 Kg respectively or of rectangular type with minimum weight of cover and frame 144 Kg.

Heavy duty covers and frames shall be either of circular type with clear openings of 500 and 560 mm and 170 and 208 Kg weight respectively or of double triangular type with clear openings of 500 and 560 mm and 229 and 255 Kg weight respectively.
The CI manhole cover and frames shall conform to IS : 1726 - 1991.

© 2024 MECON Limited
All rights reserved

01.38 ROAD

01.38.01 GENERAL

Roads shall be understood to include road bed, the wearing surface, berms, foot-paths, kerbs, culverts and bridges.

01.38.02 SOLING STONES

Material for soling shall be natural stone boulders or crushed blast furnace slab. Stones for soling shall be of height equal to thickness of the soling with tolerance of plus or minus 25mm and shall not have a base area of less than 250 sq.cm. nor more than 500 sq.cm. and the smallest dimension of any stone shall not be less than half the largest dimension. Stones shall be tough, angular, durable and generally free from flat, elongated, soft and disintegrated particles. They shall also be free from dirt or other objectionable matter and be obtained from quarries approved by the Engineer.

Crushed slag obtained from air-cooled blast furnaces slag shall be angular, of reasonably uniform quality and density and generally be free from any thin, elongated, and soft pieces, dirt or other objection able matter. The density of slag should not be less than 1.12 gm/cc and glassy material shall not exceed 20%. Water absorption when determined in accordance with IS:2386 (Part-III) - 1963. "Methods of Tests for Aggregates for Concrete : Specific Gravity, Density Voids, Absorption and Bulking", shall not exceed 10%.

01.38.03 COARSE AGGREGATE FOR WATER BOUND MACADAM

Coarse aggregate for water bound macadam shall be natural gravel, crushed stone obtained from approved quarries or crushed blast furnace slag. Crushed stone shall be hard, durable, tough and of uniform quality, generally free from flat, elongated, soft and disintegrated particles. It shall have sharp edges and also not have excess of dirt and other objectionable matter. When tested as per IS: 2386 (Part-IV) - 1963 for Los Angeles Abrasion Value or Aggregate Impact

© 2024 MECON Limited
All rights reserved

Value, the limiting values shall be 50% and 40% respectively for base course and 40% and 30% respectively for surfacing course. The flakiness index shall not exceed 15% when tested in accordance with IS: 2386 (Part-I)-1963 "Methods of Test for Aggregates for Concrete : Particle size and Shape". Crushed slag aggregates shall meet the requirements given for soling stones from blast furnace slag.

Size and grading requirements of coarse aggregates shall be as specified in Table-2 of IRC : 19 - 1981, "Standard Specification and Code of Practice for Water Bound Macadam". The grading number of the table shall correspond to the following layer thicknesses :

Grading Number Layer Thickness	**Size Range**
1 More than 90 mm	90 mm to 40 mm
2. 90 mm to 75 mm	63 mm to 40 mm
3. 75 mm to 50 mm	50 mm to 20 mm

01.38.04 SCREENINGS

Screenings used for filling voids in coarse aggregates for water bound macadam shall generally be of the same material as the coarse aggregate. Non-plastic materials such as Kankar nodules, moorum or gravel (other than river bore rounded aggregates) may be used, provided that the liquid limit and plasticity index are below 20 and 6 respectively. The fraction passing 75 microns sieve shall not exceed 10%. Size and grading of screenings shall be as specified in Table-3 of IRC-19 - 1981. Type-A screening shall be used for grade number 1 coarse aggregate. Type-B screenings shall be used for grade number 3. Either Type-A or Type-B screenings may be used for grade number 2.

© 2024 MECON Limited
All rights reserved

01.38.05 STONE CHIPS FOR BITUMINOUS SURFACING

Coarse aggregate shall consist of crushed stone, crushed slag or crushed gravel (Shingle) retained on 2.36 mm sieve. The aggregates shall be clean, strong, durable and fairly cubical, free from disintegrated pieces, organic and other objectionable matter. The aggregates shall preferably by hydrophobic and of low porosity. The mechanical properties and grading shall be in accordance with IRC-29 - 1988 "Tentative Specifications for 4 cm Asphaltic Concrete Surface Course", having aggregate impact value 30%, Flakiness Index 25% and graded between 20mm and 2.36 mm.

01.38.06 SAND

Sand for use as fine aggregate in bituminous surfacing shall consist of crushed screenings, natural sand or a mixture of both, passing a 2.36mm sieve and retained on 75 micron sieve. It shall be clean, hard, durable, uncoated and dry, free from injurious, soft or flaky pieces and organic deleterious substances.

01.38.07 BINDER

Binding material for water bound macadam shall consist of fine grained material such as stone dust, kankar modules or moorum. The plasticity index shall be between 4 to 9 when water bound macadam is to be used as surface course and upto 6 when used as sub/base or base course.

01.38.08 PAVING BITUMEN

It shall conform to IS : 73 - 2023 and shall be of the specified type and grade. The material shall be homogeneous and shall not foam when heated to 175 degree C. Various properties like specific gravity, flash point, softening point, penetration etc. shall be as given in the above code.

© 2024 MECON Limited
All rights reserved

01.38.08.01 BITUMEN CUT BACK

Bitumen cut-back shall conform to specification given in IS : 217 - 2018. It shall be of three types, Rapid Curing (RC), Medium Curing (MC) and Slow Curing (SC). These shall comply with the requirements specified in Table - 1, 2 and 3 respectively of the above code.

The above three types of cutback bitumens shall be classified into different grades on the basis of Kinematic viscosity. Rapid curing type shall be used with aggregates containing practically no fine aggregates passing through 2.36 mm sieve. Medium curing bitumen shall be used with aggregates containing less than 20 per cent of fine aggregates passing through 2.36 mm sieve. Slow curing type shall be used with aggregates containing more than 20 per cent of fine aggregate passing through 2.36 mm sieve.

Medium curing bitumen of 30 grae i.e. MC 30 shall be used as primer. Manufacturer shall indicate source and type of the bitumen.

01.38.09 KERBS

Kerbs may be of stone, concrete or brick as may be shown in drawing or otherwise directed by Engineer.

01.38.09.01 STONE KERBS

Stones shall conform to the dimensions and shapes given in drawing. Exposed faces shall be dressed to lines.

01.38.10 CONCRETE KERBS

Shape and dimension shall conform to the drawing. They shall be pre-cast and the road side top corner shall be given a chamfer.

© 2024 MECON Limited
All rights reserved

01.38.11 GALVANIZED STEEL BARBED WIRE FOR FENCING

These shall be of two types A&B. In both types Barbs shall have 4 points formed by twisting two point wires, each two turns. In type A (Iowa type) twisting is done around both line wings and in type B (Glidden type) around one line wire, in both cases making altogether four complete turns. It shall conform to IS : 278 - 2009 and shall have the diameter of line and point wire as described in schedule of item. Galvanized mild steel wire shall conform to IS : 280 - 2006.

Line and point wire shall be circular in section, free from scales and shall be uniformly galvanized. Line wire shall be in continuous length and shall not contain any welds other than those in rod before it is drawn.

01.38.12 GALVANIZED STEEL CHAIN LINK FABRIC

It will conform to IS : 2721 - 2003. It shall be of width, mesh and wire dia as per description of Item. For chain link fabric having width upto 2.00 M, of all mesh sizes, two line wires shall be provided. Whereas for width of 2.40 M and mesh size exceeding 50mm three line wires shall be provided. These shall be provided at top and bottom of the fabric, but wherever three line wires have been specified, these shall be provided at top, bottom and middle of fabric.

The mesh wire and line wire of the fabric shall be manufactured from Galvanised steel conforming to IS : 280 - 2006. It will have zinc coating of type medium as given in IS:4826 - 2023. " Specification for Hot dipped galvanized coatings on round steel wires". Unless otherwise mentioned in the description of item fabric with both ends twisted shall be used.
The galvanised steel pipe posts shall consists of 80 mm and 50 mm nominal diameter. The pipe posts shall conform to IS : 1161 and shall be of medium grade and galvanised.

© 2024 MECON Limited
All rights reserved

SPECIFICATION FOR CIVIL WORKS

PART – II WORKMANSHIP

© 2024 MECON Limited
All rights reserved

LIST OF CONTENTS

SR. NO.	DESCRIPTION	PAGE NO.
1.0	GENERAL	56
1.1	STANDARD	56
1.2	SUPERVISION	56
1.3	TEMPORARY WORKS	56
1.4	CODES	56
1.5	BASE LINES AND BENCH MARKS	57
1.6	SETTING OUT	57
1.7	DEWATERING	57
1.8	SAFETY OF EXISTING WORK	57
1.9	PROTECTION OF EXISTING SERVICES	58
1.10	HANDING OVER OF WORK SITE	58
2.0	EARTH WORK	58
2.1	SCOPE	58
2.2	GENERAL	58
2.3	SETTING OUT	58-59
2.4	SITE CLEARANCE AND DEMOLITION	59
2.5	CLASSIFICATION OF SOIL	60
2.6	METHOD OF EXCAVATION	61
2.7	EXCAVATION OF SOILS OTHER THAN HARD ROCK	61-62
2.8	EXCAVATION IN HARD ROCK	62-63
2.9	CUTTING AND FILLING FOR SITE LEVELLING	63
2.10	EXCAVATION FOR TRENCHES	64
2.11	EXCAVATIONS FOR FOUNDATIONS	64-66
2.12	EXCESS EXCAVATION	66
2.13	DISPOSAL OF EXCAVATED MATERIALS	66
2.14	BACKFILLING OF TRENCHES	67
2.15	BACKFILLING OF FOUNDATIONS	67

© 2024 MECON Limited
All rights reserved

2.16	FILLING UNDER FLOORS	68
2.17	LOAD BEARING FILLS	68-69
2.18	TURFING	70
3.0	ANTI-TERMITE TREATMENT	70
3.1	SCOPE	70
3.2	EXECUTION	70-72
3.3	ACCEPTANCE CRITERIA	72
4.0	CONCRETE (PLAIN & REINFORCED)	72
4.1	SCOPE	72-73
4.2	MATERIALS	73
4.3	GRADES OF CONCRETE	73-74
4.4	MIX DESIGN	74-75
4.4	WATER/CEMENT RATIO	75-76
4.6	WORKABILITIY	76-77
4.7	DURABILITY	77
4.8	TRIAL MIXES	78-79
4.9	NOMINAL MIX CONCRETE	79
4.10	VOLUMETRIC MIX CONCRETE	79
4.11	BATCHING OF CONCRETE	79-80
4.12	WATER	80-81
4.13	MIXING AND TRANSPORTATION OF CONCRETE	82-83
4.14	PREPARATORY WORKS/SURFACE PREPARATION	84-85
4.15	PLACING AND COMPACTION OF CONCRETE	86-88
4.16	CONSTRUCTION JOINT & COLD JOINTS	88-91
4.17	REQUIREMENTS FOR CONCRETING IN SPECIAL CASES	91-92
4.18	FINISHES TO EXPOSED SURFACES OF CONCRETE	93-94
4.19	CURING OF CONCRETE	94-95
4.20	TESTING OF CONCRETE	95-98

© 2024 MECON Limited
All rights reserved

4.21	STEEL REINFORCEMENT	98-103
4.22	SHUTTERING	104-108
4.23	DAMP PROOF COURSE CONCRETE	108-109
4.24	GROUT	109-111
4.25	CONCRETING IN WATER RETAINING STRUCTURES	111
4.26	APPLICATION OF LIVE LOAD	112
4.27	FOAM CONCRETE	112
5.0	MASONRY	112
5.1	GENERAL	112
5.2	MATERIALS	113
5.3	SELECTION OF MORTARS	113
5.4	CEMENT MORTAR	113
5.5	BRICK WORK	114-119
5.6	STONE MASONRY	119-123
5.7	HOLLOW CONCRETE BLOCK MASONARY	123-124
6.0	PLASTERING AND POINTING	125
6.1	MATERIALS	125
6.2	PLASTERING	125-126
6.3	CEMENT POINTING	126-128
6.4	ROUGH CAST CONCRETE FACING	128-129
7.0	FLOORING, PAVING & FACING	129-145
8.0	DOOR & WINDOWS	145
8.1	FIXING	145
8.2	TARRING	146
8.3	FITTINGS	146
9.0	METAL DOORS, WINDOWS AND ROLLING SHUTTERS	147
9.1	GENERAL	147
9.2	FIXING	148

© 2024 MECON Limited
All rights reserved

9.3	FITTINGS	148
9.4	NORMAL STEEL PLATE DOORS	149-150
9.5	PRESSED STEEL DOORS, SHUTTERS	150
9.6	STEEL WINDOWS, SASHES, VENTILATORS, ETC.,	151
9.7	COLLAPSIBLE GATE (STEEL)	151
9.8	STEEL ROLLING SHUTTERS AND GRILLS	151-154
9.9	GUARANTEE	154-155
10.0	PAINTING TO STEEL SURFACE	156-157
11.0	INTERNAL WATER SUPPPLY PLUMBING, DRAINAGE & SANITATION	157-158
12.0	WATER SUPPLY & PLUMBING	158-183
13.0	EXTERNAL SEWERAGE & DRAINAGE	184
13.1	SCOPE OF WORK	184
13.2	MATERIALS	185
13.3	EXCAVATION OF TRENCHES AND PITS	185
13.4	CAST IRON PIPES	186-195
13.5	STONE WARE GLAZED PIPELINES (S.W.G)	195-200
13.6	MAN HOLES	200-201
13.7	MARKER PLATES	201
14.0	ROAD WORK	202
14.1	GENERAL	202
14.2	TRENCHING AND PREPARATION OF SUBGRADE	202
14.3	ASH CARPET	203
14.4	BOULDER SOLING	203-204
14.5	KERBS	205
14.6	WATER BOUND MACADAM SURFACING	205
14.7	PREPARATION OF BASE AND SHOULDERS	205
14.8	SPREADING COARSE AGGREGATES	205-206

© 2024 MECON Limited
All rights reserved

14.9	ROLLING	206
14.10	APPLICATION OF SCREENINGS	207
14.11	SPRINKLING AND GROUTING	207
14.12	APPLICATION OF BINDING MATERIAL	207
14.13	SETTING AND DRYING	208
14.14	SURFACE EVENNESS	208
14.15	BITUMINOUS PAVEMENTS	208-215
14.16	BERMS	215
14.17	KERBS	215
14.18	BRIDGES AND CULVERTS	215
14.19	BOULDER PITCHING	216
14.20	SCARIFYING & DISMANTLING	216
14.21	DIVERSIONS	217
15.0	WATERPROOFING TO ROOFS & BASEMENTS & WATER PROOFING PAINTS	217
15.1	SCOPE	217
15.2	MATERIAL	217
15.3	GENERAL WORKMANSHIP	217
15.4	PAINTING WITH HOT BITUMEN	217-218
15.5	PAINTING WITH BITUMEN EMULSION	218
15.6	WATERPROOFING OF ROOF	218-221
15.7	WATERPROOFING FOR BASEMENT	221-224
15.8	SURFACE APPLICATION	225
15.9	GUARANTEE	225
15.10	WATERPROOFING COURSE WITH FIBRE GLASS R.P. TISSUE.	225-229
15.11	WATERPROOFING COURSE WITH PVC SHEETS/MEMBRANE	229-232
15.12	WATERPROOFING WITH NON-SHRINK POLYMERIC WATERPROOF GROUTING COMPOUND.	232-234
16.0	MISCELLANEOUS	235

© 2024 MECON Limited
All rights reserved

16.1	FALSE CEILING	235-240
16.2	WOODEN PARTITION	240-241
16.3	EXPANSION AND ISOLATION JOINTS	242-246
16.4	BARBED WIRE FENCING	246-247
	SPECIFICATION FOR FLYASH-CEMENTBRICKS –(ANNEXURE-I)	248-253

© 2024 MECON Limited
All rights reserved

1.0 GENERAL

1.1 STANDARD

A high standard of workmanship in all trades will be required. The Contractor shall ensure that only skilled and experienced workmen are employed.

1.2 SUPERVISION

The Contractor's supervising staff shall be fully qualified and experienced in the types of work being carried out under their supervision and shall be capable of ensuring that work is executed efficiently and as per specification.

1.3 TEMPORARY WORKS

Where required, the Contractor shall furnish such details of his temporary works as may be called for by the Engineer and the Contractor shall satisfy the Engineer as to their safety and efficiency. The Engineer may direct that temporary works, which he considers unsafe or insufficient, shall be removed and replaced in a satisfactory manner.

1.4 CODES

1.4.1 The years of publication against various standards, referred in this specification, correspond to the latest standards as on date of preparation of this specification. During use of this specification in future, the latest publication as on date shall be referred to. Where standards are not yet published by the BIS or IRC, adoptable British Standards or other International Standards shall apply.

In case of any conflict in meaning between these specifications and those of BIS or IRC, or British/International Standards, the provisions of these specifications shall prevail.

© 2024 MECON Limited
All rights reserved

1.5 BASE LINES AND BENCH MARKS

The Contractor shall establish and maintain, to the satisfaction of Engineer, the base lines and bench marks, based on which the works are set out. Where such base lines and bench marks are provided by the Engineer, the Contractor shall maintain these throughout the period of construction without causing any disturbance to them.

1.6 SETTING OUT

The Contractor shall set out all the works to be executed by him, in line with the standard base lines, levels, position and bench marks and truly as per drawings within the accepted tolerance limits at no extra cost to Owner. The Contractor shall be solely responsible for the setting out of all the works, to be executed by him and the approval of such setting out by the Engineer shall in no way absolve the Contractor his responsibility for carrying the work to the true lines, levels and positions as per drawings.

1.7 DEWATERING

The Contractor shall carry out all the works, in dry and workable condition and maintain the same in dry condition till the final handing over of works at no extra cost to the Owner. For this the Contractor shall make all the necessary provisions of dewatering, wherever necessary, to the entire satisfaction of the Engineer.

1.8 SAFETY OF EXISTING WORK

Before taking up any construction adjoining other property or existing work, the Contractor shall take all steps necessary for the safety and protection of such property or work at no extra cost to the owner.

© 2024 MECON Limited
All rights reserved

1.9 PROTECTION OF EXISTING SERVICES

The Contractor shall take all precautions necessary to prevent damage to or interference with underground or over ground services such as cables, drains, piping or piles, whether shown on drawings or not. Equipment etc., mounted in position shall be protected against falling debris etc., by means of tarpaulin or such other material at no extra cost to the owner.

1.10 HANDING OVER OF WORK SITE

On completion of work, the Contractor shall remove all rubbish, debris, surplus materials, temporary work etc., from the site. The site shall be handed over in a tidy and workmanlike manner at no extra cost to the owner.

2.0 EARTH WORK

2.1 SCOPE

This chapter deals with earth work and excavation for civil works in site, formation/oversite leveling, foundations, cutting and grading for roads/pavement and railways, canals, embankments other than water retaining embankments trenching for drainage and other burried services and the like.

2.2 GENERAL

The Contractor shall carry out the excavation strictly to the lines and levels, in conformity with the drawings or instructions of the Engineer.

2.3 SETTING OUT

Before commencement of earthwork block levels of existing ground shall be taken by the Contractor jointly with the Engineer, plotted and signed in token of acceptance of ground levels. Excavation shall not be commenced until the initial ground levels have been recorded and accepted.

© 2024 MECON Limited
All rights reserved

Reference lines, bench marks and base lines shall be set out by the Contractor for control of earthwork operation. Setting out shall be done with pegs, blocks, bamboo poles or rails, marking boundaries or centre lines, as the case may be, and the same maintained for reference and future checking. Chainaie stones at regular intervals shall be set up for embankments. All setting out operations shall be got checked and approved by Engineer. However, such checking and approval by the Engineer shall in no way absolve the Contractor of his responsibilities for carrying out the work to the true lines, levels and positions as per drawing, and in case any error is noticed at any stage in the contractor's work, it shall be corrected/rectified by him without any cost to the Owner.

2.4 SITE CLEARANCE AND DEMOLITION

The site shall be cleared of all trees, stumps, roots, brush wood, bushes and other objectionable materials. Useful and saleable material, if any, shall be the property of the owner and shall be stacked properly as directed by the Engineer. The areas to be covered with embankments shall be stripped of top soil to required depths to expose acceptable founding strata. Top soil unsuitable for use in embankment construction and other fills shall be disposed off as directed. All combustible materials shall be stacked and burnt in locations sufficiently remote to eliminate all danger of fire hazards. All old concrete, brick works and drains which interfere with construction works shall be dismantled with the approval of the Engineer taking all necessary precautions prescribed in safety specification. Top soil which is suitable for use in construction work shall be stockpiled for later use. Other objectionable materials such as trash, debris, stones, brick, broken concrete, scrap metal etc., shall be disposed off as directed by the Engineer. Payment for cutting and removal of trees, stumps, dismantling existing structures and stripping shall be regulated by the description in the Schedule of Items or Part V of these specifications.

© 2024 MECON Limited
All rights reserved

2.5 CLASSIFICATION OF SOIL

The Engineer will decide the class of any particular soil. Classification of soil shall be as under and the decision of the Engineer shall be binding on the Contractor :

A) ORDINARY SOIL

Soils which yield to ordinary application of pick and shovel, phawra rake or other ordinary digging implements (including earth moving equipment such as bulldozer, shovels without resorting to blasting) without offering much resistance, shall be classified as ordinary soil. This includes organic soil, turf, sand, gravel, loam clay, mud, peat, black cotton soil, soft shale and loose moorum etc.

B) HARD SOIL

This comprises of all soils that cannot reasonably be excavated by the above mentioned digging implements, but can be excavated with close application of pick axe or scarifiers or jumpers to loosen. This includes compact moorum, stiff clay, hard shale, cobble stone etc.,

C) SOFT /DECOMPOSED ROCK

This comprises of rock or boulders which may be quarried or split with crow bars, pavement breakers etc., This include lime stone, sand stone, weathered rocks and hard conglomerates etc .and existing structures embedded in earth and tarred macadam roads, pavements, met in the excavation. The fact that contractor resorts to blasting for his own reasons shall not mean that the rock is hard and classified as hard rock.

D) HARD ROCK

This comprises of rocks which require blasting for excavation. Where blasting is prohibited, excavation has to be carried out by chiseling, wedging or any other agreed methods.

© 2024 MECON Limited
All rights reserved

2.6 METHOD OF EXCAVATION

The Contractor may carry out excavations, filling and compaction by any method considered most suitable, and befitting the site conditions subject to any stipula- tions contained in the contract and the specifications. All excavations shall be required to be kept completely free from water, from whatever source it may come, during the construction. No foundation work shall be taken up until the surfaces are properly drained.

2.7 EXCAVATION OF SOILS OTHER THAN HARD ROCK

Excavation shall be carried out in the most expeditious and efficient manner to the lines and levels as indicated in drawings or as directed by Engineer. Prior approval of the Engineer shall be taken for the method to be adopted for excavation including dimensions, side slopes, dewatering, shoring etc., Such approval shall not make the Engineer responsible for any consequent damage or loss caused. All precautions shall be taken to preserve the material below and beyond line of excavation in soundest condition. All damages done beyond limits of excavation shall be made good by the Contractor at his own cost in a manner approved by the Engineer. All excavated materials shall be removed to spoil heaps, dumping yards or transported for filling as may be necessary. When soil heaps are formed for future use, heaps shall be protected from washing away due to rain or surface run off. The sides of excavation shall be maintained in stable condition by adequate stepping and batter. To prevent entry of surface water and accumulation of subsoil water in excavated areas, suitable drainage arrangements as may be needed and directed by Engineer, shall be provided and maintained. Pumped out water shall be drained off properly avoiding damage to other existing works. If any pipelines, cables or service lines are likely to be exposed, excavation around these services shall be carried out manually and all such services shall be adequately supported and protected at no extra cost.

© 2024 MECON Limited
All rights reserved

Excavation shall be carried out in any material encountered including road surfaces, pavements, burried parts of old foundations, pits or other structures. Excavated materials shall be placed beyond 1.5 metres of the edge of the excavation pit/trench or half the depth of the pit/trench whichever is more or further away as directed by the Engineer. Sumps made for dewatering must be kept clear of the foundations.

In firm soil the sides of the trenches shall be kept vertical upto a depth of 2.0m from the bottom and for a greater depth, trench shall be widened by allowing steps of 50cm on either side after every 2.0m depth from the bottom, so as to give a vertical side slope of 1/4 : 1. Where the soil is soft, loose or slushy, the width of the steps shall be suitably increased or sides suitably sloped or suitable shoring and strutting provided as directed by the Engineer. For trenches deeper than 2.0m, the Contractor shall obtain detailed instruction from the Engineer in writing regarding the stepping, sloping of sides or shoring and strutting to be done. For these bye-works, no extra cost will be paid to the Contractor.

2.8 EXCAVATION IN HARD ROCK

Where hard rock is met and blasting is considered necessary for its excavation, the Contractor shall intimate the Engineer in writing. Excavation in hard rock shall be done either by blasting or chiseling or by such other agreed methods as may be required. Levels of hard rock surface shall be taken and got approved by Engineer before start of excavation. Blasting shall be permitted only when proper precautions are taken for protection of persons, works and property. The Contractor shall obtain the necessary licence for procuring, storing and using explosives.

Blasting operations shall be carried out by a licensed Blaster. The quality and quantity of explosives, size and spacing of holes depth of holes etc., shall be such that they will neither open seams nor damage or shatter the rock beyond the specified lines of excavation. A tolerance of 150 mm will however be allowed beyond the excavation

© 2024 MECON Limited
All rights reserved

lines. As excavation approaches final stages, the depth of holes and the amount of explosives used shall be reduced progressively to avoid over breakage or damage to founding strata. Any fissures, cracks and voids below prescribed depth of excavation shall be corrected by removing loose pieces, shattered or affected rock and replaced by lean concrete of M-5 grade or (1:5:10) cement concrete in the case of foundations. Where excavated surface is to receive structural concrete, the surface shall be cleaned of dust and other objectionable materials.

In cases where blasting, though otherwise required, is prohibited because of any reason, the excavation shall be carried out by chiseling, wedging or such other agreed methods. All materials excavated from blasting, chiseling or any such methods shall be stacked for measurement as directed by Engineer.

2.9 CUTTING AND FILLING FOR SITE LEVELING

Excavation and filling operations for site leveling shall be so planned and executed, that transportation and re-handling are minimised. The sides of excavation and fills shall be maintained in stable condition by adequate batters, stepping and dewatering. Materials not desirable shall be disposed off in area indicated by Engineer. When it is required to blend the material, it shall be done by selective excavation and filling operation. Wells, ponds, cesspools and water logged areas shall be emptied of water and deslushed before filling. Filling shall be done in horizontal layers not exceeding 300mm in thickness as specified or as directed by the Engineer. All clods shall be broken before placing the fill. Earth moving equipment shall be allowed to ply over the fill to permit compaction. Adequate allowance shall be made for subsidence of fill material. Levels shall be taken and excess or shortfall shall be made good by appropriate cutting or filling.

© 2024 MECON Limited
All rights reserved

2.10 EXCAVATION FOR TRENCHES

Excavation for trenches shall be carried out in materials encountered to enable laying of service lines or drainage channels or any other desired purpose. Exca- vation shall be done to lines and levels shown in drawings and shall be done providing adequate measures for stability. Vertical wooden sleepers or light rails shall be erected at uniform levels at places where changes of direction and gradients occur. Centre lines shall be marked on horizontal sleepers or rails, laid across the trenches. Depths of excavation and pipe invert levels shall be checked by means of boning rods of appropriate lengths. Trench beds shall be trimmed and rammed with sprinkling of sand or moorum to required gradients for continuously supporting the pipelines. Trenches shall be locally deepened and widened to receive sockets and permit joints to be inspected.

TIMBERING

In case of trenches, tunnels, channels, drains, manholes, chambers, basement and other places where the soil is not capable of being retained without the support, timbering as directed by the Engineer shall be resorted to. It shall be the responsibility of the Contractor to take all the necessary steps to prevent the sides from collapsing.

2.11 EXCAVATIONS FOR FOUNDATIONS

Excavation for foundation shall be done to the lines and levels indicated in the drawings. Excavated material shall be transported and stored at convenient spots for reuse in back filling of foundations and other fills. Surplus material shall be transported, spread and levelled at dumping areas. Side slopes of excavation and/or shoring shall be adequate from consideration of stability and working space. When so required and authorised by Engineer, the sides of excavation shall be protected with proper shoring, strutting, sheeting and sand bags etc., These shall be removed only when work in the pit is completed, with the

© 2024 MECON Limited
All rights reserved

approval of the Engineer. When it is felt that removal of supports may result in side collapse or settlement of adjoining ground or endanger adjoining structures and foundations, they shall be left permanently in position. The last 150 mm of excavation shall be done and the bottom trimmed to the required levels only when concreting is imminent. If at any point the natural ground is disturbed or loosened for any reason, it shall be consolidated by tamping or rolling or made up with concrete of M-5 grade, or (1:5:10) cement concrete if so ordered by the Engineer at no extra cost. Where the soil encountered at depths indicated in drawings is loose or weak, it shall be further excavated to levels of firm strata as may be directed by the Engineer and filled with lean concrete of M-5 grade/(1:5:10) cement concrete or sand as directed. If the bottom of excavation has been left exposed not through neglect or fault of the Contractor and it has become deleteriously affected by atmospheric action and water, such portion of deteriorated foundation material shall be removed and made good by lean concrete of grade M-5/(1:5:10) cement concrete or sand as directed and such extras will be paid for.

2.11.1 For deep excavation in the proximity of existing buildings, foundations, streets, railway tracks, underground cabling, gas piping, water and drainage lines, and the like, adequate appropriate precautions shall be taken to protect such structures or works from damage, displacement or settlement, either as an immediate result of the excavation or as after effect, discernible with the passage of time. The method of protection of existing structures and services may include sheet piling, shoring, strutting slinging or any other method including dewatering. Payment for such protective work shall be governed by the description given in the Schedule of Items for the particular work.

© 2024 MECON Limited
All rights reserved

2.11.2 For excavation adjoining existing piles care shall be taken to ensure that no pile under any circumstances is exposed from the top for a height exceeding 2 metres. No strutting shall be done against exposed piles, nor exposed piles ever used for tying guy ropes or supports either temporarily or permanently.

2.12 EXCESS EXCAVATION

All excavation done beyond the specified limits or directions of Engineer shall be considered as excess excavation. They shall be made good as prescribed below by the Contractor at his cost:

i) Excess excavation in case of site leveling shall be made good by filling and compacting with material same as the surrounding material. Degree of compaction shall be at least the same as the surrounding material.

ii) Excess excavation in case of trenches shall be made good by filling and compacting with selected earth to the same compaction as the surrounding material or as directed by Engineer. This shall be done in layers not exceeding 150 mm thick, moistened and thoroughly compacted by tamping.

iii) Excess excavation in case of foundation beyond required depths shall be made good by filling with lean concrete of M-5 grade/(1:5:10) cement concrete.

2.13 DISPOSAL OF EXCAVATED MATERIALS

Excavated materials that are unsuitable for use in construction works or in excess of construction requirements shall be disposed off in dumping yards or in locations indicated by Engineer. Waste piles/heaps shall be located in such places where they will not interfere with natural flow of rain water access or transport or with the access to nearby structures. When required, they shall be levelled and trimmed to such lines and levels as indicated by Engineer.

© 2024 MECON Limited
All rights reserved

2.14 BACK FILLING OF TRENCHES

Trenches shall be backfilled after pipes or service lines are tested and approved. Filling shall be done with earth in 150 mm thick layers free from unwanted material and well rammed. Soft material shall be used in bottom of trenches upto a level of 150 mm above the top of pipes before backfilling with other fill mate- rials. All clods and lumps shall be broken before placement. Care shall be taken not to disturb, break or damage the pipes during backfilling and compaction process.

2.15 BACKFILLING OF FOUNDATIONS

Backfilling of foundations shall be done using suitable soils from excavations. Soil shall be free from organic matter and other materials which would affect the stability of the fill and shall be free from boulders, brick bats wood pieces and other injurious materials, lumps and clods. Before commencement of backfilling of foundations. all shoring and formwork, bits of timber, cement bags and all other rubbish shall be removed. Hydro-insulation, Bitumen painting or application of anti-corrosive protective and anti-termite treatments shall have been completed. Backfilling operation shall not commence without approval of Engineer. Backfilling shall be carried out in well compacted layers of 150 mm thickness. Each layers shall have near optimum moisture content. Layers will extend to the entire width of excavation and shall be sprinkled with water during compaction process. Ramming shall be done to achieve firm compaction. Backfill shall be trimmed and finished to lines and levels indicated in the drawings and/or as directed by the Engineer. Mechanical equipment like vibratory roller, vibro earth rammer or vibratory compactor shall be used for compaction.

© 2024 MECON Limited
All rights reserved

2.16 FILLING UNDER FLOORS

Material for filling under floors shall be soil free from harmful minerals, vegetable matter etc., and shall not be expansive soils. Filling shall be done in well compacted layers not exceeding 150 mm in thickness. Each layer shall be compacted to 95% Standard Procter Density. Sufficient soaking shall be done before compaction. The entire area to be covered by flooring shall be finally dressed and trimmed to required levels. Mechanical equipment like vibratory roller, vibro earth rammer or vibratory compactor shall be used for compaction.

2.17 LOAD BEARING FILLS

Load bearing fills include embankments for roads and railways and such other earth fills above ground levels provided for protection of fuel oil tanks, pads for storage tanks, drain, bunds and the like. Fill materials shall either be selected earth obtained from excavations for site leveling, trenches and foundations or from selected borrow areas as may be required. Soils selected for filling in embankments shall be of uniform quality and free from boulders, organic materials and other objectionable matter. Soils having high silt and clay content and having laboratory maximum dry density less than 1.44 gms per c.c. shall not be used for load bearing fills. For fills greater than 3 m in height soils shall have laboratory density not less than 1.52 gms per c.c. Soils for top 500 mm of fills for roads and railways shall have laboratory density not less than 1.65 gms per c.c. and shall not have marked swelling and shrinkage properties.

Foundation preparation for embankments shall be done as prescribed under site clearance. The founding strata shall be compacted as much as possible by rolling or tamping before placement of fill material. The water content of founding strata should be same as that specified for embankment fill. Any pockets of loose material or depressions left in founding strata as a result of clearing operation shall be filled and compacted with the same

© 2024 MECON Limited
All rights reserved

material as the surrounding founding strata. When an embankment is to be placed on steep sloping ground the surface of the

ground shall be trenched in steps or trenched or broken up in such a manner that the new materials bonds well with the founding strata.

Fill material shall not be placed until foundation has been inspected and approved by Engineer. Material shall be placed in even, continuous, horizontal layers over full width of embankment in well compacted layers not exceeding 200 mm thickness. Each layer shall be compacted by means of smooth rubber tyred rollers, sheep-foot rollers, tractors, tampers or other mechanical means as may be found suitable for the location. Before rolling, the water content shall be checked and corrected by sprinkling with water or adding dry material or aeration as may be required. This shall be followed by mixing and the layer left for soaking before compaction. The water content shall be within plus or minus 2% of Standard Proctor Optimum. Density of compacted layers shall be determined by sand re- placement method. Average compacted density shall be at least 95% of Standard Proctor Density. The number of tests to be conducted for determination of moisture content and density shall be as prescribed by the Engineer. Side slopes of embankments shall be formed along with the main embankment. No side dumping shall be done for the formation of slopes. When required the width of each layer shall be constructed slightly in excess of required width and slopes trimmed to remove loose edge materials and completed to lines shown in drawings or as directed by the Engineer. Subgrades for road works shall be thoroughly wetted sufficiently in advance of placing of any base course and it shall be ensured that it is firm and moist for at least 50 mm below the surface. Should the subgrade for any reason be loose or have density less than required, it shall be recompacted and refinished. Excessive loss of moisture in the subgrade shall be prevented by sprinkling and/or scaling. No traffic or hauling equipment shall be permitted to ply on finished subgrade and any

© 2024 MECON Limited
All rights reserved

damage caused to such portion shall be made good by the Contractor at his own cost.

2.18 TURFING

The slopes of embankment shall be dressed to line and slightly roughened to bond and hold a surface dressing consisting of 150 mm humus layer of soil. The entire surface shall then be covered with turf consisting of blocks or strips of grass of approved species. The sod shall include a net of roots and earth at least 75 mm thick. The sod shall be laid on slope in close contact and then tamped in place so as to close and fill the joints between blocks.

Immediately after placing the turf, slope shall be thoroughly wetted and kept wet for a sufficient period to assure plant growth. Watering shall be continued until the grass takes root firmly and the whole area presents a uniform appearance. In the event that the plant growth has not taken place within the period of maintenance such areas or patches shall be redone by the Contractor at his own cost.

3.0 ANTI-TERMITE TREATMENT

3.1 SCOPE

The scope of work includes setting up a chemical barrier against attack by subterranean termites while the building is under construction.

3.2 EXECUTION

3.2.1 GENERAL

Unless otherwise specified all work shall in general be executed as specified in IS
: 6313 Part-II -2022 and as per approved specification of the agency having special know-how for the job.

All necessary work to ensure uniform distribution and

© 2024 MECON Limited
All rights reserved

proper penetration of treating solution shall be done according to the instruction of the Engineer.

Soil treatment shall not be done when it is raining or when the soil is wet with rain or subsoil water. Once formed, the treated soil barrier shall not be disturb

3.2.2 CHEMICALS AND RATE OF APPLICATION

Chemical like chlorpyriphos 20% EC (Conforming to IS 8963 - 2006) in 1% emulsion shall be applied by pressure pumps, uniformly over the area treated. (1 part chemicals + 20 parts water = 1% emulsion).

3.2.2.1 TREATMENT OF PITS, TRENCHES & BASEMENT EXCAVATIONS

Foundations, basements etc. may either be fully enveloped by the chemical barrier or the treatment may start 500 mm below ground level. The bottom surface and sides of excavation (upto a height of about 300mm) for column pits, walls, trenches and basements shall be treated with emulsion @ 5 liters per sq.m. of surface area. Backfills around columns, walls, etc., shall be treated @ 7.5 liters per sq.m. of the vertical surface. Treatment shall be done in stages following the compaction of earth in layers. The treatment shall be carried out after the ramming operation is done by rodding the earth at 150mm centers closed to the wall surface and spraying the emulsion in the specified dose.

3.2.2.2 TREATMENT OF TOP SURFACE OF PLINTH FILLING

Holes 50 mm to 75 mm deep at 150 mm centres both ways shall be made with crow-bars on the surface of compacted plinth fill. Emulsion at the rate of 5 litres per sq.m of surface shall be applied prior to laying soling or subgrade. Special care shall be taken to maintain continuity of the chemical barrier at the junction of vertical and horizontal surfaces.

© 2024 MECON Limited
All rights reserved

3.2.2.3 Treatment of doors, windows & soil surrounding pipes, Wastes and conduits.

Special care shall be taken at the points where pipes and conduits enter the building and the soil shall be treated for a distance of 150 mm and a depth of 75 mm at the point where they enter the building. All the wooden door/window frames on the ground floor of the buildings shall be treated with the insecticidal solution.

3.2.2.4 TREATMENT OF EXPANSION JOINTS

These shall receive special attention and shall be treated in a manner approved by the Engineer.

3.3 ACCEPTANCE CRITERIA

The Contractor shall give a 10 year service guarantee in writing supplemented by a separate and unilateral guarantee from the specialised agency for the job to keep the building free of termites for the specified period at no extra cost to the Owner.

4.0 CONCRETE PLAIN & REINFORCED

4.1 SCOPE

This chapter covers the workmanship, special requirements & regulations with which the contractor must comply to achieve the following two objectives :

(a) The provision, at all locations on the site, of dense workable concrete, having the specified characteristic strength.

(b) The placing of concrete at all elevations, well compacted by vibrations, in well aligned and well fixed formwork ensuring the internal and external dimensions of structures as per drawings and maintaining the size, shape number and locations of reinforcements, inserts etc., as specified in the drawings providing

© 2024 MECON Limited
All rights reserved

the surface finish after stripping off the formwork to ensure the structural configurations as per drawings as well within the specified tolerance limits, curing and guaranteeing the characteristic strength, all as specified.

4.1.1 The mixing, placing, compacting, curing and finishing of concrete shall be done according to IS: 456-2000 "Code of Practice for Plain and Reinforced Concrete".

4.2 MATERIALS

For materials, reference to Part - I (Materials) shall be made.

4.3 GRADES OF CONCRETE

The grades of concrete unless otherwise specified shall be in accordance with the following table. The grade of concrete to be used in each section of work will be shown in the drawings or in the schedule of items :

Grade of Concrete	Characteristic Strength i.e. Compressive Strength of 15 cm cubes at 25 days (N/mm^2)	Nominal Maximum Aggregate Size (mm)
M-5A	5	63
M-5B	5	40
M-7.5A	7.5	63
M-7.5B	7.5	40
M-10A	10	63
M-10B	10	40
M-10C	10	20
M-10D	10	12
M-15A	15	63
M-15B	15	40
M-15C	15	20
M-15D	15	12
M-20A	20	63
M-20B	20	40
M-20C	20	20

© 2024 MECON Limited
All rights reserved

M-20D	20	12
M-25C	25	20
M-25D	25	12
M-30C	30	20
M-30D	30	12
M-35C	35	20
M-35D	35	12
M-40C	40	20
M-40D	40	12

Notes : A,B,C,D mentioned along with grade of concrete correspond to the maximum size of coarse aggregate being 63mm, 40mm, 20mm & 12mm respectively.

Unless otherwise specified in the drawings or schedule of items the maximum nominal size of coarse aggregates for different grades of concrete shall be as under :

	For concreting in very narrow space or in very small thickness	12 mm
	For all reinforced concrete work except in massive foundations	20 mm
	For all ordinary plain concrete & massive reinforced	40 mm

4.4 MIX DESIGN

4.4.1 GENERAL

At the commencement of the contract the Contractor shall make preliminary tests to determine the proportions by weight of cement, fine aggregates, coarse aggregates and water necessary to produce required grades of concrete. The mix proportions shall be selected to ensure that workability of the fresh concrete is suitable for the conditions of handling and placing and when concrete hardens, it shall have the required strength, durability and surface finish. The Contractor shall get approval of Engineer to such proportions before he starts concreting.

© 2024 MECON Limited
All rights reserved

However, such approval shall not relieve the Contractor of his responsibility to produce concrete having compressive strengths as laid down in the foregoing Table.

No departure from the approved proportions will be permitted during the works unless and until the Engineer gives written authorisation for any change in proportion. The Engineer shall have authority at any time to check whether the mixing of concrete is being carried out according to the approved proportions.

4.4.2 For the all major and important R.C. works and for all special works, the design of mixes shall be made by the Contractor at his own cost, for each grade of concrete as well as for various workability. The design of mixes shall be made according to I.S. 10262-2019 or any other approved standard methods.

4.4.3 The concrete made by designing the mix is termed hereinafter as "Design Mix Concrete".

4.4.4 The cement content for various grades of concrete shall be based on design mix.
However, irrespective of requirement of cement found out from design mix, minimum & maximum cement content of concrete shall be in accordance with Clause No 8.2.4.1 & Clause No 8.2.4.2 of IS 456-2000 respectively.

4.5 WATER/CEMENT RATIO

4.5.1 Where a particular water/cement ratio is stipulated in the design or drawing along with the characteristic grade of concrete the design of mix shall be carried out by adjusting the other variable factors to obtain the characteristic strength of concrete with stipulated water/cement ratio.

4.5.2 In the structures where the impermeability and shrinkage of concrete have an important bearing on the durability and serviceability of the structures, such as water retaining structures, basements, underground

© 2024 MECON Limited
All rights reserved

premises, tunnels, pump houses, exposed structures near sea side or deserts, prestressed structure, thin pre- cast members etc. the water cement ratio shall be kept low and preferably not exceeding 0.45.

4.5.3 The water cement ratio, as achieved in the Mix Design, or as specified in the drawings shall be adhered to strictly and shall not be varied without the permis- sion of the Engineer.

4.6 WORKABILITY

4.6.1 The workability of fresh concrete shall be such that the concrete is just suitable for the conditions of handling & placing so that after compaction if becomes completely consistent and homogeneously surrounds all the reinforcement and completely fills the formwork.

4.6.2 The workability of fresh concrete at the place of batching/mixing shall be measured by compacting factor test and at the place of disposition by means of slump test. During the finalisation of Trial Mixes, the relationship between compacting factor and slump test shall be established for each grade of concrete as well as for various levels of workability. The workability tests shall be carried out in accordance with IS:1199-2018.

4.6.3 Normally, in the condition of low water cement ratio as well as for medium/high workability, the workability shall be achieved by increasing the cement content, in consistent with added water.

4.6.4 In cases where the cement content is to be limited to reduce the heat of hydration, and the water/cement ratio is also to be kept low to reduce the permeability or due to other requirements the desired workability may be achieved with use of limited doses of plasticiser or air entraining agent. In such cases the method of mixing and dosage of the plasticiser/air entraining agent shall be according to the manufacturer's specification and with the approval of the Engineer.

© 2024 MECON Limited
All rights reserved

4.6.5 The usual limits of consistency for various types of structures are given below :

Limits of consistency

Degree of workability	Slump in mm with standard - Cone		Use for which concrete is suitable as per IS:1199
	Min.	Max.	
Very low	0.00	25.0	Large mass concrete structure with heavy compaction equipment, roads and the like.
Low	25.0	50.0	Un congested wide and shallow R.C.C structures
Medium	25.0	75.0	Deep but wide R.C.C structures with congestion of reinforcement and inserts
High	75.0	125.0	Very narrow and deep R.C.C. structures with and inserts congestion due to reinforcement

Note : Not withstanding anything mentioned above, the slump to be obtained for work in progress shall be as per direction of the Engineer. With the permission of the Engineer, for any grade of concrete, if the water has to be increased in special cases, cement shall also be increased proportionately to keep the ratio of water to cement same as adopted in trial mix design for each grade of concrete. No extra payment will be made for this additional cement.

4.7 DURABILITY

The durability of concrete, depending on the exposure condition, is to be taken into account while designing the mix. For given aggregates, the cement content should be sufficient to make sufficiently low water cement ratio and Appendix A of IS: 456-2000 shall be taken as guideline for durability considerations.

© 2024 MECON Limited
All rights reserved

4.8 TRIAL MIXES

4.8.1 After approval of the Mix Design by the Engineer, the Contractor shall make in presence of Engineer the Trial Mixes for each grade of concrete as well as for required workability.

4.8.2 Before starting the trial mixes, necessary preparatory works like sieve analysis of the aggregates, determination of densities of different ingredients and moisture contents in the aggregates, shall be completed according to the I.S. Codes 383- 2016 and 2386-1963.

4.8.3 Each trial mix shall be handled and compacted by the method which the Contractor proposes to use for that mix in the works and the mixes shall not show tendency of inadequate compaction by the method proposed.

4.8.4 The compacting factor and the slump of each trial mix shall be determined immediately after mixing and the values shall not exceed the maximum value obtained in the mix design.

4.8.5 Six numbers of 150 mm test cubes shall be made from each trial mix. These shall be cured and tested in accordance with relevant I.S. codes. In order to have the specified characteristic strength in the field, the concrete mix as designed in the Design Mix shall have higher average compressive strength depending on the degree of quality control at site. If the size and special requirement of the work so warrants, the trial may be extended to cover larger ranges of mix proportions as well as other variables such as alternative source of aggregates, maximum size and grading of aggregates and different type and brands of cement.

4.8.6 Before commencement of the concreting works of particular grade of concrete, the Contractor must complete the work of trial mixes and subsequent testing of the test cubes obtained therefrom the design of the Approved Mix for that particular grade of concrete.

© 2024 MECON Limited
All rights reserved

4.8.7 The entire cost of all the trial mixes including all the preparatory works for trial mixes, preparation of test cubes and their testing shall be borne by the Contractor.

4.9 NOMINAL MIX CONCRETE

4.9.1 Nominal mix concrete may be used for all concrete of Grade M-10 and below. If design mix concrete cannot be used for any reason for Grade M-15 & M-20, nominal mix concrete may be used with the permission of Engineer, Nominal mix concrete shall not be used, in any case for Grade of concrete above M-20.

4.9.2 The proportioning of materials for nominal mix concrete shall be in accordance with Table-3 of clause 8.3 of I.S. 456-2000. The stipulations of Clauses 8.3.1 & 8.3.2 of IS: 456-2000 shall also be taken into consideration.

4.10 VOLUMETRIC MIX CONCRETE

Where concrete is specified in volumetric proportions such as 1:4:8, 1:3:6, 1:2:4, 1:1 1/2:3, 1:1:2 etc., in the schedule of items, coarse and fine aggregates shall be measured by volume and cement by weight. The water cement ratio shall be within 0.45 to 0.70 depending upon the workability.

4.11 BATCHING OF CONCRETE

4.11.1 CEMENT

Cement shall always be batched by weight. A separate weighing device shall be provided for weighing cement. Where the weight of cement is determined by accepting the weight per bag, number of bags shall be weighed separately to determine the average net weight of cement per bag and the same shall be checked regularly

© 2024 MECON Limited
All rights reserved

4.11.2 AGGREGATES

4.11.3 For both Design Mix concrete and Nominal Mix concrete, the aggregates (coarse and fine) shall be batched by weight.

4.11.4 In particular cases, or where weigh-batching is not possible proportioning by volume batching may be allowed by the Engineer, provided the Contractor guarantees the uniformity of aggregates through out the period of construction. For this purpose, the Contractor shall submit to the Engineer sufficient data indicating the weight/volume relationship of aggregates for different types of concrete and after such approval, periodic checks on the weight/volume relationship of the aggregates shall be made by the Contractor to the satisfaction of the Engineer. Where aggregates are moist and volume batching is adopted, allowance shall be made for bulking in accordance with I.S. 2386 (Part-III)-1963.

4.11.5 Suitable adjustments shall be made for the variation in the weight of aggregates due to variation in their moisture contents.

4.12 WATER

4.12.1 Water may be measured either by weight or by volume. When measured by volume, it shall be by well calibrated conical shaped jar or vessel or from a calibrated tank fitted to the mixer.

4.12.2 Adjustment of water due to moisture contents in coarse and fine aggregates

It is very important to maintain the water cement ratio constant at its correct value. For the correct determination of amount of water to be added in the concrete mix, to maintain the water cement ratio constant, the amount of moisture content in both coarse and fine aggregates shall be taken into consideration, be as frequently as possible, the frequency for a given job being determined by the Engineer according to weather conditions.

© 2024 MECON Limited
All rights reserved

4.12.3 DETERMINATION OF MOISTURE CONTENT IN THE AGGREGATES

Determination of moisture content in the aggregates shall be according to I.S. 2386 (Part-III)-1963. Where tests are not conducted, the amount of surface water may be estimated from the following table :

Aggregates	Surface water carried by	
	% by weight	Lit / m3
Very wet sand	7.	12
Moderately wet	5.	8
Moist sand	2.	4
Moist gravel & stone	1.25 - 2.5	20-40

** - Coarser the aggregate, less the water it will carry.

4.12.4 ADMIXTURES

Any solid admixture, to be added, shall be measured by weight, but liquid or semi- liquid admixture may be measured by weight or volume.

4.12.5 ACCURACY OF BATCHING

The accuracy of batching shall be within the following tolerance:

Cement within plus or minus 2% by weight.
Aggregate within plus or minus 5% by weight.
Water within plus or minus 0.5% by weight.

© 2024 MECON Limited
All rights reserved

4.13 MIXING & TRANSPORTATION OF CONCRETE

4.13.1 MIXING OF CONCRETE

4.13.1.1 MACHINE MIXING

Concrete shall always be mixed in mechanical mixer. Water shall not, normally, be charged into the drum of the mixer until all other ingredients are already in the drum and mixed for at least one minute. Mixing shall be continued until there is uniform distribution of materials and the mass is uniform in colour and consistency. The mixing time from the time of adding water shall be in accordance with IS: 1791-2020 but in no case less than 2 minutes or at least 40 revolutions.

4.13.1.2 HAND MIXING

When hand mixing is permitted by the Engineer it shall be carried out on a water tight platform and care shall be taken to ensure that mixing is continued until the mass is uniform in colour and consistency. In case of hand mixing 10% extra cement shall be added to each batch at no extra cost to the Owner.

4.13.2 TRANSPORTATION OF CONCRETE

4.13.2.1 Concrete shall be transported from the place of mixing to the place of placing concrete as rapidly as practicable by such means which will prevent the segregation or loss of any of the ingredients and maintain the required workability. No water shall be mixed with the concrete after it has left the mixer.

4.13.2.2 Where concrete is transported over long distances, the Contractor shall provide suitable means by which different grades of concrete are readily identifiable at the place of final deposit.

© 2024 MECON Limited
All rights reserved

4.13.3 ACTIONS BEFORE PLACEMENT OF CONCRETE

4.13.3.1 PROGRAMME OF WORKS

At the beginning of every fortnight, the contractor shall give his detailed concreting programme for that fortnight to the Engineer. Such programmes, shall specify all information such as the locations where concrete is to be poured, type/grade of concrete, volume of concrete to be poured, number and Type of vibrators proposed to be used as well as proposed to keep as standby, number of skilled technicians and supervisors proposed to be engaged, the proposed time and period of pouring etc.

4.13.3.2 CHECKING & APPROVAL

Before placement of concrete, the contractor shall get all the form works, reinforcements, inserts, conduits, openings, surface preparation etc., checked and approved by the Engineer. To facilitate such checking, the contractor shall complete all his works according to the drawings and specifications well in advance before placement of concrete at least 36 hours for all major/important/complicated works and 24 hours for all minor/ordinary/simple works. The checks are purely in the interest of the work and to draw the contractor's attention to his contractual obligations to execute the works according to the drawings/specification and do not relieve the contractor from his

responsibility in getting the end results for the quality & strength of concrete and for maintaining the shape, level & dimensions of the finished concrete, as well as the inserts, openings, other features within the tolerance limits.

© 2024 MECON Limited
All rights reserved

4.14 PREPARATORY WORKS/SURFACE PREPARATION

4.14.1 FOR CONCRETE DIRECTLY ON EARTH FOUNDATION

4.14.1.1 Earth foundation on which direct placement of concrete is specified, shall be rammed and consolidated as directed by the Engineer such that it does not crumble and get mixed with concrete during or after placement. If the foundation is quite wet, the same shall be kept dry and then sufficiently consolidated, if necessary, a thin top layer of the wet soil shall be removed and replaced by sand or other suitable materials as directed by the Engineer without any extra cost to the Owner. Care shall also be taken that earth from the sides also does not get mixed with the concrete, during or after placement, before it has sufficiently set and hardened.

4.14.1.2 The earth foundation, over which concrete is to be placed direct, shall not be kept abandoned at the specified level and concrete shall be placed immediately following the final preparation of the formation otherwise suitable measures shall be taken, as directed by the Engineer without any extra cost to the Owner.

4.14.2 FOR CONSTRUCTION JOINTS

All such joints shall have continuous square bond grooves to produce a substantial and water-tight key. Where the placement of concrete has to be resumed on a surface which has hardened, it shall be roughened, cleaned by wire or bristle brushing, compressed air, water jet etc., and thoroughly wetted. For vertical construction joints a neat cement slurry shall be applied on the surface immediate before the placement of concrete. For horizontal joints the surface shall be covered with a layer of freshly mixed mortar about 10 to 15 mm thick composed of cement and sand in the same proportion as the cement and sand in the concrete mix and applied immediately before placing of the concrete. On this surface (i.e. on the surface of joints) a layer of concrete not exceeding 150 mm in thickness shall first be placed and shall be well rammed against old

© 2024 MECON Limited
All rights reserved

work, particular attention being paid to corners and close spots. To ensure water tightness, care shall be taken to punn concrete properly against the old surface.

4.14.3 (a) ON VERTICAL SURFACES OF MASONRY

When the concrete is placed on the vertical surface of masonry (as in the case of thin concrete fins projected from the vertical masonry surface), a groove of dimension as directed by the Engineer shall be cut in the masonry to ensure a proper bond and the surface shall be cleaned thoroughly. Before the placement of concrete, the surface shall be kept moist by spraying water at least for the period of 2 hours and a thick coat of cement slurry shall be applied immediately before the placement of concrete.

b) OVER WALLS

Building paper over average 12mm thick cement sand bearing plaster of 1:4 mix with neat cement finish shall be provided at the bearings of slabs over walls as directed by the Engineer.

4.14.4 INSIDE THE FORMWORK (CLEANING, SURFACE PREPARATION ETC.,)

The interior of the form works, where the concrete is to be placed, shall be thoroughly washed by high pressure water jet or air jet to completely clean the entire volume from all sort of dirts, grease/oil, foreign and deleterious materials etc. The reinforcement shall be completely clean and free from all sorts of dirts, grease/oil, rust, foreign/deleterious materials etc., Before placement of concrete, the form works coming in contact with concrete, shall be coated with form oil or raw linseed oil material or provided with any approved material to prevent adhesion of concrete to the form work, but utmost care shall be taken so that such oily material do not come in contact with the reinforcement.

© 2024 MECON Limited
All rights reserved

4.15 PLACING AND COMPACTION OF CONCRETE

4.15.1 The concrete shall be placed and compacted before setting commences & should not be subsequently disturbed. No water shall be mixed with the concrete after it has left the mixer. Method of placing should be such as to preclude segregation. Approved mechanical vibrator shall be used for compacting concrete, and concrete shall not be over vibrated or under vibrated.No concrete shall be placed until the place of deposit has been thoroughly inspected and approved by the Engineer. all inserts and embedments properly secured in position and checked and forms properly oiled. No concrete shall be placed in the absence of the Engineer.

4.15.2 Concrete shall be placed on clean bed having the designed level. The bed shall be cleaned of all debris and other objectionable materials. Seepage water, if any, shall be controlled or diverted.

4.15.3 Concreting shall not be carried on during rains unless all precautions have been taken by the Contractor and necessary permission has been given by the Engineer. Suitable measures shall be taken to control the temperature of concrete.

4.15.4 Where plums are permitted in massive concrete, they shall be washed and carefully placed. No stone shall be closer than 30 cm to an exposed face, nor nearer than 15 cm to an adjacent stone.

4.15.5 Concrete shall not be dropped from a height of more than 2m except through a chute, the design and type of which shall be subject to approval of the Engineer.

4.15.6 The concrete shall be placed, spread and compacted by approved mechanical vibrator. Vibrators shall not be used for pushing concrete to adjoining areas.

© 2024 MECON Limited
All rights reserved

4.15.7 For members involving vertical placing of concrete (eg. columns, walls etc.,), each lift shall be deposited in horizontal layer extending the full width between

shuttering and of such depth that each layer can be easily and effectively vibrated and incorporated with the layer below by means of compaction.

4.15.8 For member involving horizontal placing of concrete (e.g. slabs, beams etc.,) theconcrete shall be placed along the line of starting point in such quantities as will allow members to be cast to their full depth along the full width between side shuttering and then gradually brought towards the finishing point along its entire front parallel to the starting line. Vibration and surface finish shall follow behind the placement as closely as possible.

4.15.9 Utmost care shall be taken to avoid the displacement of reinforcements/embedded parts or movement of formwork or damage to faces of the form work or transmis- sion of any harmful vibration/shocks to the concrete which has not yet hardened sufficiently.

4.15.10 All members shall be concreted at such a rate that no cold joint is formed and fresh concrete is placed always against green concrete which is still plastic and workable.

4.15.11 Should any unforeseen occurrence results in a stoppage of concreting for one hour or such other time as might allow the concrete, already placed, to begin to set before the next batches can be placed, the Contractor shall make at his own cost, suitable tongue, and groove construction joint, as approved by the Engineer. Any additional reinforcement required as directed by the Engineer shall also be provided by the Contractor at his own cost. Before placement of new batches of concrete over that construction joint, the surface preparation according to this specification stipulated earlier, shall be done by the Contractor at his own cost.

© 2024 MECON Limited
All rights reserved

4.15.12 The concrete shall be worked well up against whatever surface it adjoins and compacted to such a degree that it reaches its maximum density as a homogeneous mass, free from air and water holes and penetrates to all corners of moulds and shuttering and completely surrounds the reinforcement. All measures shall be taken to make the shape, size, and location of the finished concrete including its embedments, holes, openings etc., well within the accepted tolerance limit.

4.16 CONSTRUCTION JOINT & COLD JOINTS

4.16.1 CONSTRUCTION JOINTS

4.16.1.1 Normally, the construction joints including crank inducing joints shall be constructed as per locations and details indicated on the drawings.

4.16.1.2 Where the location of the joint is not specified in the drawings, it shall be in accordance with the following guide lines:

(a) IN COLUMNS

(i) In case of Projection from basement slab, 300 mm from the top of base slab or 75 mm from the top of the haunches whichever is higher.

(ii) In framing of beam at different elevation, 75 mm below the lowest soffit of the beam and in case of projection from beams and slabs 75 mm from the top surface of the beam/slab or at the top surface of beam/Slab whichever facilitates formwork.

(iii) For columns under flat slabs 75 mm below the lowest soffit of the slab.

(b) In walls (horizontal construction joints)

(i) Walls projecting from base slab: 300 mm from top of base slab

© 2024 MECON Limited
All rights reserved

(ii) Walls supporting the suspended slab: 75 mm from the lowest soffit of the slab

Note :

In the case of water retaining structures and structures under the influence of ground water, approved water bars of suitable size shall be provided to make the joint completely water-tight.

(c) In beams

Beams shall be cast, as a rule, without a joint. But if provision of a joint is unavoidable, the joint for simply supported beam shall be vertical and at the middle of the span ; in continuous beam, the same shall be at the point of minimum shear force.

(d) In suspended slabs

(i) In slab of small span, there shall be no construction joints.

(ii) In slabs of large span and continuous slabs, construction joint, if allowed by the Engineer shall be vertical at the middle of span and at the right angles to the principal reinforcement.

(e) In walls (Vertical construction joint)

As a rule, walls shall be cast monolithically without any vertical construction joint, unless specified in the drawing. However, for a long wall, the Engineer may allow vertical construction joint and the same shall be at the place of minimum shear force. In water retaining structures and in structures under the influence of ground water approved water bars of suitable size shall be provided to make the joints completely water tight.

(f) In slabs resting on ground

© 2024 MECON Limited
All rights reserved

(i) For Plain concrete

Concreting shall be done in alternate panels not exceeding 10 sq.m in area. The largest panel dimension shall be 5 m.

(ii) For nominally reinforced slab

The area of pour shall not exceed 40 sq.m and the maximum panel dimension shall not exceed 8m.

For the basement slabs which act as structuralmember there shall be no construction joint.

(g) In ribbed beam

The beams shall be cast monolithically with the slab in one continuous operation.

4.16.1.3 In all construction joints the reinforcements shall pass through as per drawings and the same shall not be disturbed in any way.

4.16.1.4 The vertical construction joints shall be provided by insertion of board keeping provision for passage of reinforcement/fixtures / embedments. All construction joints shall be made to form a tongue and groove joint.

4.16.2 COLD JOINT

An advancing face of a concrete pour, which could not be covered before expiry of initial setting time for unexpected reasons, is called a cold joint. The Contractor shall remain always vigilant to avoid cold joints. If however, a cold joint is formed due to unavoidable reasons, the following procedures shall be adopted for treating it :

© 2024 MECON Limited
All rights reserved

(a) If the concrete is so green that it can be removed manually and if vibrators can penetrate the surface without much effort, fresh concrete can be placed directly over the old surface and the fresh concrete along with the old concrete shall be vibrated systematically and thoroughly.

(b) In case the concrete has hardened a bit more than (a), but can still be easily removed by a light hand pick, the surface shall be raked thoroughly and the loose concrete removed completely without disturbing the rest of the concrete in depth. Then a rich mortar layer of 12 mm thickness, shall be placed on the cold joint and then the fresh concrete shall be placed on the mortar layer and vibrated thoroughly, penetrating deep in to the layer of concrete.

(c) In case the concrete at the joint has become so stiff that it cannot be remoulded and mortar or slurry does not rise in spite of extensive vibration, a tongue and groove joint shall be made by removing some of the older concrete and the joint shall be left to harden at least for 12-24 hours. It will then be treated as regular construction joint and the surface preparation of the same, before placement of concrete, shall be as described in the appropriate clauses of these specifications.

4.17 REQUIREMENTS FOR CONCRETING IN SPECIAL CASES

4.17.1 CONCRETING IN DEEP LIFTS

Placing of concrete in lifts exceeding 2 M in columns and walls is in the category of deep lifts.

4.17.1.1 Before commencement of work, the contractor shall submit for the approval of the Engineer, the details of the methods he proposes to adopt for concreting.

© 2024 MECON Limited
All rights reserved

4.17.1.2 The placement of concrete shall preferably be by tremie, chute or any other approved method.

4.17.1.3 In structures of heavy/complicated reinforcement or in complicated form works, the contractor shall provide sufficient number of windows in the form works as directed by the Engineer to check the placement and compaction of concrete in different stages. Such windows shall be closed as soon as the concreting reaches the bottom level of the same.

4.17.2 CONCRETING UNDER WATER

When it is necessary to deposit concrete under water, the special requirements, over and above those of this specification shall be in accordance with Clause 13.2 of IS: 456-2000.

4.17.3 COLD WEATHER CONCRETING

When conditions are such that the ambient temperature may be expected to be 4.5C degree or below during the placing and curing period, the work shall conform to IS: 7861 (Part-II)-1981.

4.17.4 HOT WEATHER CONCRETING

When concreting in very hot weather the Contractor shall take all precautions as stipulated in IS: 7861 (Part-I)-1975 and stagger the work to cooler parts of the day to ensure that the temperature of wet concrete used, specially in massive structure, does not exceed 38 degree 'C'.

Positive temperature control by methods like pre-cooling, post cooling or cooling of concrete by circulating cold water through small embedded pipe lines inside concrete, if required, shall be specified and shall be undertaken.

© 2024 MECON Limited
All rights reserved

4.18 FINISHES TO EXPOSED SURFACES OF CONCRETE

The Contractor is to include in his quoted rate for concrete, the provision of normal finishes in both formed & unformed surfaces as and where required by the Engineer without any extra cost to the owner. Some common finishes are indicated below:

4.18.1 SURFACE WHICH DO NOT REQUIRE PLASTERING

Surface in contact with casings shall be brought to a fair and even surface by working the concrete smooth against casings with a steel trowel while it is being deposited and also by working over the surface with a trowel immediately after the removal of the casings or centerings, removing any irregularities and stopping air holes, etc. Use of mortar plaster is not permissible for correcting levels, removing unevenness etc. However, if, in the opinion of the Engineer, such plastering is unavoidable then the thickness of plaster shall in no case exceeds 5 mm and the plastering shall be in cement and sand mortar.(1:3).

4.18.2 EXPOSED SURFACES WHICH NEED PLASTERING

Surfaces of beams/columns flushing with the block work or other structures where intended to plaster, shall be hacked adequately as soon as the shuttering is stripped off so that proper bond with the plaster can develop.

4.18.3 SURFACE FOR NON-INTEGRAL FINISH

Where a non-integral finish such as floor finish is specified or required, the surface of the concrete shall be struck off at the specified levels and finished rough.

4.18.4 FOR MONOLITHIC FINISH

Where no more finishing course is to be applied as in the case of basement floor, industrial flooring or the screed concrete flooring etc, the concrete shall be completed

© 2024 MECON Limited
All rights reserved

and struck off at the specified levels and sloped with a screed, board and then floated with a wooden float. Steel troweling is then started after the concrete has hardened enough to prevent the excess of fines and water to rise to the surface but not hard enough to prevent proper finishing. Troweling shall be such that the surface is flat, smooth and neatly finished.

4.19 CURING OF CONCRETE

4.19.1 GENERAL

The purpose of curing is to prevent loss of moisture from the concrete itself so that the cement inside the concrete is sufficiently hydrated which of course is slow and prolonged process. As soon as the concrete has hardened sufficiently the curing shall be started. To cure the concrete properly and sufficiently is also the sole responsibility of the contractor.

4.19.2 DIFFERENT METHODS OF CURING

Any one of the following methods may be used for curing as approved by the
Engineer.

(a) Curing by direct water.

(b) Curing by covering the concrete with absorbent material and kept damp.

4.19.3 CURING BY DIRECT WATER

This is done either by ponding or spraying water.

(a) PONDING

Ponding is widely used for curing slab and pavements. Earth bunds are formed over the slabs and water is pumped or poured into them and the same is replenished at interval to make up for the loss of evaporation. As this type of curing is one of the best

© 2024 MECON Limited
All rights reserved

methods, 10 days of curing after final setting is sufficient.

(b) BY SPRAYING WATER

Curing is done by spraying water by suitable means at approved time intervals. While spraying, it shall be ensured that the complete area is covered. In order to avoid cracking, cold water shall not be applied to massive members immediately after striking the form work, while the concrete is still warm. Alternate wetting and over drying shall be avoided.

Curing by spraying water shall be continued at least for 18 days after final setting.

4.19.4 CURING OF CONCRETE WITH ABSORBENT MATERIAL KEPT DAMP

The entire concrete surface is covered either with hessian, burlap, sawdust, sand, canvas or similar material and kept wet continuously for at least 12 days after final setting.

4.20 TESTING OF CONCRETE

4.20.1 GENERAL

The Contractor shall carry out, entirely at his own cost, all sampling and testing in accordance with the relevant I.S. standards and as supplemented herein. The Contractor shall get all tests done in approved Laboratory and submit to the Engineer, the test result in triplicate within 3 days after completion of the test.

4.20.2 CONSISTENCY TEST (TESTS OF FRESH CONCRETE)

4.20.2.1 At the place of deposition/pouring of the concrete, to control the consistency, slump tests and/or compacting factor tests shall be carried out by the Contractor in accordance with I.S. 1199-2018 as directed by the Engineer.

© 2024 MECON Limited
All rights reserved

4.20.2.2 The results of the slump tests/compacting factor tests shall be recorded in a register for reference duly signed by both the Contractor and the Engineer. That register shall be considered as the property of the Owner and shall be kept by the Contractor at site in safe custody.

4.20.2.3 The results of the slump tests/compacting factor tests shall tally, within accepted variation of plus or minus 12% with the results in the respective design mix, in case of mix design concrete and with the values indicated in the table under clause 6.1 of IS: 456 in case of nominal mix concrete.

4.20.2.4 For any particular batch of concrete, if the results do not conform to the requirements as specified in 4.20.2.3 or do not conform to any requirement of this specification, the Engineer has the right to reject that batch and the Contractor shall remove the same immediately from the site, at no cost to the Owner.

4.20.3 Strength test of concrete

4.20.3.1 While placing concrete, the Contractor shall make 6 nos. of 15 cm test cubes from particular batches of concrete as desired by the Engineer. The frequency of taking test cubes shall be either according to clause 14.2 of IS: 456-2000 or as directed by the Engineer.

4.20.3.2 The cubes shall be prepared, cured and tested according to IS: 516-2018. Out of 6 nos. of test cubes 3 shall be tested for compressive strength at 7 days after casting and the remaining 3 at 28 days after casting.

4.20.3.3 A register shall be maintained at site by the Contractor with the following details entered and signed by both the Contractor and the Engineer. That register shall be considered as the property of the Owner.

(a) Reference to the specific structural member
(b) Mark on cubes
(c) The grade of concrete
(d) The mix of concrete

© 2024 MECON Limited
All rights reserved

(e) Date and time of casting
(f) Crushing strength at 7 days
(g) Crushing strength at 28 days
(h) Any other information directed by the Engineer.

4.20.4 ACCEPTANCE CRITERIA FOR TEST CUBES

The acceptance criteria of concrete on strength requirement shall be in accordance with the stipulations under clause 15 of IS: 456-2000.

NON-DESTRUCTIVE TESTS ON HARDENED CONCRETE

If there is doubt about the strength or quality of a particular work or the test results do not comply with the acceptance criteria as stipulated under clause 5 of IS: 456-2000, non-destructive tests on hardened concrete like core test and/or load tests or other type of non destructive tests like ultrasonic impulse test etc. shall be carried out, as may be directed by the Engineer, by the Contractor at entirely his own cost.

4.20.5 The core tests and load tests shall comply with the requirements of clause 16.3 and 16.5 of IS: 456-2000 respectively. In case of other types of special tests like ultrasonic impulse test etc., the stipulation of clause 16.6 of IS: 456-2000 shall be applicable.

4.20.6 Concrete below specified strength

In case of failure of test cubes to meet the specified requirements the Engineer may take one of the following actions:-

1) Instruct the Contractor to carryout additional test and/or works to ensure the soundness of the structure at Contractor's expense.

2) Reject the work and instruct that section of the works to which the failed cubes relate shall be cut out and replaced at Contractor's expense and the resultant

© 2024 MECON Limited
All rights reserved

structures affected due to such rejection shall be made good at contractor's expense.

3) Modification/remedial measures if approved by the engineer to be carried out at contractor's expense.

4) Accept the work with reduction in the rate in appropriate item subject to the provisions of clause 15 of IS 456-2000 provided it is technically acceptable. The reduction in the rate shall be as given below :-

i) When test strength of the sample is above 90% of the characteristic strength, payment shall be made 10% less than the contract rate.

ii) When test strength of the sample is between 80-90% of the characteristic strength, payment shall be made 25% below than the contract rate.

4.20.7 CONCRETE FAILED IN NON-DESTRUCTION TESTS

In case the test results of the core tests or load tests in a particular work do not comply with the requirements of respective clause (16.3 for core test and 16.5 for load tests) of IS: 456-2000 the whole or part of the work concerned shall be dismantled and replaced by the Contractor as may be directed by the Engineer at no extra cost to the Owner and to the satisfaction of the Engineer. No payment for the dismantled concrete including relevant form work, reinforcement, embedded fixtures etc. shall be made. In the course of dismantling if any damage occurs to the adjacent structure or embedded item, the same shall be made good, free of charge by the Contractor, to the satisfaction of the Engineer.

4.21 STEEL REINFORCEMENT

4.21.1 MATERIAL

Material shall be as specified in the respective schedule of Items. The specifications of materials shall be as per Part-I.

© 2024 MECON Limited
All rights reserved

4.21.2 STORAGE

Steel reinforcement shall be stored in such a manner that they are not in direct contact with ground. Bars of different classifications and sizes shall be stored separately. In cases of long storage or in coastal areas, reinforcement shall be stacked above ground level by at least 15 cm, and a coat of cement wash shall be given to prevent scaling and rusting at no extra cost of the owner.

4.21.3 BENDING AND PLACING

Bending and placing of bars shall be in conformity with IS: 2502-1963 "Code of Practice for Bending and Fixing of Bars for Concrete Reinforcement" and IS: 456-2000 "Code of Practice for Plain and Reinforced Concrete".

4.21.4 WELDING OF REINFORCEMENT

Welding of mild steel reinforcement bars conforming to IS:432 (Part-I)-1982 shall be done in accordance with IS: 2751 -1979 "Code of Practice for Welding of Mild Steel Bars used for Reinforced Concrete construction" with additional precaution that for lap welded joints the throat thickness of weld beads shall be at least 3 mm or 0.6 times the nominal size of weld (which is the radius of bar) whichever is more.

Welding of cold worked high strength deformed bars conforming to IS: 1786-
2008 shall be done using electric arc welding process using low hydrogen electrodes (Ferro Weld- I or Ferro Weld-II or equivalent). Oxy-acetylene welding shall not be used.

Butt welding of bars upto 32 mm diameter for vertical splices shall be done either by single bevel groove weld or double bevel groove weld, with bevel angle 45 degree. Butt welding of bars upto 32 mm diameter for horizontal splices shall be done either by single Vee-groove weld or double Vee-groove weld with cham- fered angle of 45 degree to 60 degree. The diameter of welded joint shall be 1.2 times the

© 2024 MECON Limited
All rights reserved

diameter of bar. Edge preparation for butt welding shall be done by shearing, machining and grinding. Oxy-acetylene flame shall not be used for cutting. Chamfered faces shall be smooth finished by hand file if required.

Lap welding of bars upto 20 mm diameter shall have a minimum bead length of
12 times the diameter of bar or 200 mm whichever is more arranged on one or both sides. The throat thickness of weld beads shall be 5 mm or 0.75 times the nominal size of weld (which is the radius of bar) whichever is more. In case of unsymmetrical lap weld with weld bead on one side only, the maximum length of each weld bead shall be 6 times the diameter of bar or 100 mm (whichever is more), separated by an equal length in between weld beads. Splice bars used in symmetrical weld joint shall have same diameter as the parent bars. Lap joint with single splice bars shall have weld beads on both sides.

Lap welding of bars above 20 mm shall be done using splice plate or splice angle. Thickness of splice plate shall not be less than 0,65 times the diameter of bar and width shall not be less than twice the diameter of bar. The size of splice angle shall be such that its area of cross section is at least 1.62 times the area of bar being spliced.

More than one third of the bars shall not be welded at any one section and welded joints shall be staggered at a distance of 50 times the diameter of bars. Welding shall not be done at bends or curved parts of bars and it shall be located at least at a distance of 50 times the diameter of bar from bends.

TESTS

Test pieces of welded bars shall be selected and tested in accordance with the provisions of IS: 2751-1979. The number of tests will be as laid down in IS:
2751-1979 or such larger number as the Engineer may decide having regard to the circumstances.

© 2024 MECON Limited
All rights reserved

4.21.5 CLEANING

All steel for reinforcement shall be free from loose scales, rust coatings, oil, grease, paint or other harmful matters immediately before placing the concrete. To ensure this, reinforcements with rust coatings shall be cleaned thoroughly before bending/placement of the same.

4.21.6 PLACING IN POSITION

All reinforcements shall be accurately fixed and maintained in positions as shown on the drawings and by adequate means like mild steel chairs and/or concrete spacer blocks as required. Bars intended to be in contact at crossing points, shall be securely tied together at all such points by 20G annealed soft steel wire or by tack welding in case of bars larger than 25 mm dia, as may be directed by the Engineer. Binders shall tightly embrace the bars with which they are intended to be in contact and shall be securely held. The vertical distance between successive layers of bars shall be maintained by provision of mild steel spacer bars. They should be spaced such that the main bars do not sag perceptibly between adjacent spacers.

4.21.7 CLEAR COVER

Clear cover shall be as specified in the drawings. If nothing is specified in the drawing the clear cover shall be in accordance with the relevant clause of IS: 456-1978.

Light structural work and embedded metallic parts, conduits

4.21.8.1 FABRICATION OF METALLIC PARTS & LIGHT STRUCTURAL WORKS

Fabrication of all structural steel work shall be done in accordance with IS: 800 - 2007 "Code of Practice for use of Structural Steel in General Building Construction". Workmanship shall match to the best practice in modern structural shops. Greatest accuracy

© 2024 MECON Limited
All rights reserved

shall be observed in the manufacture of every part and all identical parts shall be strictly inter-changeable. Steel work shall be shop fitted and shop assembled as far as practicable to minimise site work and to meet transport restrictions. All materials shall be straight and if necessary before being worked shall be straightened of flattened by pressure and shall be free from twists. Shearing or flame cutting may be used and the resulting edges shall be clean and straight. Flame cut edges shall be planed/cleaned by chipping or grinding. Sheared members shall be free from distortion at sheared edges. Welding and welded work shall conform to IS: 816 -1969 "Code of Practice for use of metal arc welding for General Construction in Mild Steel". Mild steel electrodes conforming to IS: 814-1991 "Specification for covered electrodes for metal arc welding of mild steel shall be used.

4.21.8.2 TRANSPORTATION AND STORAGES

All pieces shall be properly identified and bundled for transportation to work site. Care shall be exercised in the delivery, handling and storage of material to ensure that material is not damaged in any manner. Materials shall be kept free of dirt, grease and foreign matter and shall be stored properly on skids or any other

suitable supports to avoid contact with ground, damage due to twisting, bending etc.

4.21.8.3 ERECTION OF LIGHT STRUCTURAL WORK

Erection of light structural work shall be carried out in accordance with the provisions of IS: 800-2007. No component which is bend or twisted shall be put in place until the defects are corrected. Components seriously damaged during handling shall be replaced. No riveting, permanent bolting or welding shall be done until proper alignment has been completed. Whenever field welding is to be done it shall be in accordance with the requirements of shop fabrication. Shop paints shall be removed before field welding for a distance of at least 50 mm on either side of the joints.

© 2024 MECON Limited
All rights reserved

4.21.8.4.1 ERECTION OF EMBEDDED METALLIC PARTS, INSERTS, CONDUITS

Bolts and inserts shall be securely fixed in position as shown in the drawings, before commencement of concreting. Bolts shall be checked for accuracy in alignment on both the axes. Limits of tolerance in alignment and level shall be as shown in the drawing or described elsewhere in these specifications.

Where bolts are housed in sleeves, special care shall be taken after concreting is over and has partly set to ensure that the bolts move within the sleeves. The annular space of the sleeve shall be plugged with suitable stoppers to prevent the ingress of water, grout, dust, rubbish or other foreign material into it, both during and after concreting. Opened conduits shall be plugged similarlyand conduits laid on earth shall suitably encased with Plain Cement Concrete Where channels, Unshapely profiles or other similar inserts are required to be placed in concrete, special care shall be taken to keep the grooves of such profiles free from the in- gress of concrete, slurry etc., by suitable packing material, if necessary.

All threads for bolts and inserts shall be greased at intervals and kept covered to prevent damage.

4.21.8.4.2 Necessary templates, jigs, fixtures, supports shall be used as may be specified or required or directed by the Engineer free of cost to the Owner.

Exposed surfaces of embedded materials shall be painted with one coat of anticorrosive paint or bituminous paint, as desired, without any extra cost to the Owner. If welding is to be done subsequently on the exposed surfaces of the embedded parts, the painting for a length of 50mm beyond each side of the weld line shall be cleaned off.

© 2024 MECON Limited
All rights reserved

4.22 SHUTTERING

4.22.1 GENERAL

All shuttering, formwork, supports and staging shall be designed by the Contractor and be subject to approval by the Engineer. The Contractor shall submit drawings and calculations to the Engineer for scrutiny when called upon to do so. The shuttering shall be designed for a live load of 400 Kg/m2 in addition to the weight

of the green concrete, or such other load as the Engineer may specify. The Contractor shall be responsible for the correctness and strength of the formwork including its supports and centering and approval by the Engineer will not relieve him of his responsibilities.

4.22.2 MATERIAL

The staging and supports may be of round or sawn timber or tubular or other shapes in steel. Round timber shall preferably extend over the full height in one piece. These shall be securely jointed or otherwise fastened and spaced at suitable intervals as the design may warrant and shall be suitably braced at regular intervals horizontally and diagonally.

The form work shall be of steel plate on steel frame, wooden boards with steel sheet lining, or plywood or seasoned timber board. Where ornamental and curved surfaces are required the material shall be very good seasoned timber or plywood which can be shaped correctly.

4.22.3 FIXING

The shuttering shall conform to the shapes, lines, levels and dimensions shown in the drawing. It shall be fixed in perfect alignment and securely braced so as to be able to withstand, without appreciable displacement, deflection or movement of any kind, the weight of all construction, movement of persons and plant. It shall be so constructed

© 2024 MECON Limited
All rights reserved

as to remain rigid during the placing and compacting of concrete without shifting or yielding and shall be sufficiently water tight to prevent loss of slurry from the concrete.

All props shall be supported on sole plates and double wedges. At the time of removing props these wedges shall be gently eased and not knocked out. The form work shall be so designed that the sides are independent of the soffits and the side forms can be removed easily without any damage or shock to the concrete.

4.22.4 WROUGHT SHUTTERING

Wrought shuttering shall be such as to produce a first class fair face on the concrete free from board marks or any other disfigurements. This shall be used for exposed surfaces where specified or directed by the Engineer. It may be made of heavy quality plywood or steel sheets having smooth, plain surface.

The joints in shuttering shall be arranged in a regular pattern **approved** by the
Engineer. Wrought shuttering shall be aligned within a tolerance of 3 mm.

4.22.5 ROUGH SHUTTERING

Rough shuttering shall be used for all surface of concrete walls, **footings** etc., which are not exposed in the finished work or which are to receive plaster and as directed by the Engineer. It may be made of timber, ordinary plywood or steel sheets.

© 2024 MECON Limited
All rights reserved

4.22.6 SPECIAL PROVISION

4.22.6.1 Wherever concreting of narrow member is required to be carried out within shutters of considerable depth, temporary openings in the sides of the shutters shall, if so directed by the Engineer, be provided to facilitate cleaning, pouring and consolidation of concrete.

4.22.6.2 In liquid retaining structures and structures below ground water level, through bolts for the purpose of securing and aligning the form work shall not be used.

4.22.6.3 Forms shall be given an upward camber, if so desired by the Engineer, to ensure that long beams do not have any sag. The camber may be 1 in 250 or as the Engi- neer may direct.

4.22.6.4 The joints in form work shall be sealed by adhesive tapes or by other means, to prevent any leakage of slurry or mortar if so directed by the engineer.

4.22.7 PREPARATION FOR CONCRETING

Before any concreting is commenced the shuttering shall be carefully examined for dimensional accuracy and safety of construction. The space to be occupied by concrete shall be thoroughly cleaned out to remove rubbish, debris, shavings and saw dust. The surface in contact with concrete shall be coated with an approved substance such as mould oil or other non-staining mineral oil to prevent adhesion. Where necessary the surface shall be wetted to prevent absorption of moisture from concrete. Care shall be taken to avoid the reinforcements coming in contact with shutter oil.

4.22.8 REMOVING

4.22.8.1 Removal of forms shall never be started until the concrete has thoroughly set and aged to attain sufficient strength to carry twice its own weight plus the live load that is likely to come over it during construction

© 2024 MECON Limited
All rights reserved

4.22.8.2 Removal of forms shall not entail chipping or disfiguring of the concrete surface.
Shuttering shall be removed without shock or vibration and shall be eased off carefully in order to allow the structure to take up its load gradually.

4.22.8.3 Under normal circumstances (generally where temperatures are above 21 degree 'C'), and where ordinary portland cement is used shuttering may be struck after the expiry of the following periods :-

Walls, columns & vertical faces	24 to 48 hours as may be directed by the Engineer.
Bottom of slab upto 4.5 m span	7 days
Bottom of slab above 4.5 m span, bottom of beam and arch, rise upto 6 m span	14 days
Bottom of beam and arch rise over 6 m span	21 days

These periods may be increased at the discretion of the Engineer. Special care shall be taken while striking the shuttering of cantilevered slabs and beams, portal frames etc.,

4.22.8.4 Before removing the form work, the Contractor must notify the Engineer to enable him to inspect the condition of the finished concrete immediately after the removal of the form works.

4.22.9 CONTRACTOR'S RESPONSIBILITY

Any damage resulting from faulty preparation, premature or careless removal of shuttering shall be made good by the Contractor at his own expense.

© 2024 MECON Limited
All rights reserved

4.22.10 IRRECOVERABLE SHUTTERING

In cases where the shuttering cannot be removed without damaging the structure itself or where removal of shuttering is rendered impossible due to the nature of construction or where the Engineer may so instruct, such shuttering shall be classified as irrecoverable shuttering. However, such abandoning of shuttering will be permitted only in situations where it will not remain exposed or otherwise cause damage of any kind.

4.22.11 METAL FORMS

Where permanently left-in-place metal forms or deck are shown in drawings or otherwise ordered to be provided by the Engineer, they shall satisfy the requirements with regard to load carrying capacity. The metal forms shall be obtained from a reputed manufacturer, whose performance guarantee shall be obtained and submitted to the Engineer. Designs and drawings giving full details shall be submitted to the Engineer in advance for approval.

4.23 DAMP PROOF COURSE CONCRETE

4.23.1 THICKNESS

It shall be as specified in the drawings or in the items.

4.23.2 MIX

The grade of mix shall be as specified in the drawing or schedule of quantities. If nothing is specified, the mix shall be 1 part of cement : 1 1/2 part of coarse sand : 3 parts of stone chips. The stone chips shall be 12 mm down graded.

Approved water proofing admixture shall be mixed with cement as per manufacturer's specifications. The water cement ratio shall be as low as possible to increase the impermeability of concrete and in no case more than 0.5.

© 2024 MECON Limited
All rights reserved

4.23.3 PREPARATION OF BASE SURFACE

The base surface shall be well roughened by chipping and brushing with steel brush and shall be cleaned of all dirt, dust, grease, oil and all other foreign & deleterious materials. Then the surface shall be well moistened with water.

4.23.4 PLACING AND COMPACTION

Just prior to placement of D.P.C. Concrete, a thick coat of cement slurry shall be applied on the base surface. The placement shall be as specified for the concrete in beams. The concrete shall be well compacted to make it dense.

4.23.5 FINISHING

When the concrete has set enough but remains still green, the top surface shall be marked in regular pattern by steel trowel so as to have proper bond with the future work.

4.23.6 CURING

The D.P. course shall be kept continuously moist at least 10 days.

4.24 GROUT

4.24.1 SCOPE

The scope covers the grouting under base plates, grouting between the joints of precast concrete, grouting the pockets/holes/opening etc.

4.24.2 GROUTING UNDER BASE PLATES

Grouting under base plates of equipments/structures shall be of cement mortar 1:2 for thickness upto 25 mm. For thickness exceeding 25 mm, concrete of grade specified in the drawing or minimum M-20 grade using 10 mm down graded aggregates shall be used. The grout shall be placed

© 2024 MECON Limited
All rights reserved

in position well rammed until the whole space is completely filled with concrete. No vibrators shall be used. Quick setting cements shall be used in the preparation of mortar or concrete, where so specified.

The grout shall either be "dry" concrete or mortar or "wet expanding" concrete or mortar as the Engineer may direct. A dry grout shall have a slump not exceeding
6 mm. It shall be rammed under the horizontal surface with the aid of suitable tools. A "wet expanding" grout shall have a slump of at least 125 mm but not exceeding 225 mm. To this shall be added an expanding admixture approved by the Engineer and in accordance to the Manufacturer's instructions.

4.24.3 GROUTING THE POCKETS/HOLES IN CONCRETE

Depending upon the size of the pockets/holes in the concrete, the mix of the grout shall be either of concrete or of cement sand mortars. Normally the grade of such concrete/mortar shall be M-20 unless specified otherwise. In filling the holes of

foundation bolts and expanding admixture of approved type shall be used as per manufacturer's specification.

4.24.4 WORKMANSHIP

4.24.4.1 The surface of the concrete over which grouting is to be applied shall be thoroughly prepared to provide a clean rough surface. If necessary, chipping shall be carried out on such surface to make it completely rough. Then the surface shall be wetted. Bolt pockets shall be cleaned immediately before the base plate is placed in position. Before grouting the surface shall be thoroughly cleaned with compressed air/water jet.

4.24.4.2 Before placement of grout, the surfaces (except in the case of bolt holes) shall be wetted with cement slurry. In case of bolt holes/pockets water from such pockets shall be thoroughly removed by some suitable means and no cement slurry shall be applied.

© 2024 MECON Limited
All rights reserved

4.24.4.3 Hand mixing is not permitted and the grout shall always be machine mixed. If however in some special cases where the quantity of grout is so small that it cannot be machine mixed, hand mixing may be allowed but the same shall be done under the strict supervision of an experienced supervisor of the Contractor.

4.24.4.4 The grout shall be placed within 30 minutes of being mixed. The grout shall be poured and then worked into position by suitable means until the space is com- pletely filled. The Contractor shall take all possible measures during grouting so that the grout fills the space completely and thoroughly. Where the gap is very small or unapproachable for the placement of concrete, the Contractor shall grout by pressure grouting and in that case the mix may be of cement sand mortar of the appropriate grade but in any case the water cement ratio shall be as low as possible. Neither "Dry" grout (having slump 6mm or less) nor expanding wet grout shall be grouted with any type of vibrating machine

4.24.5 CURING

After 10 hours of grouting, the same shall be covered with wet gunny bags and the surface shall be kept continuously moist at least for 10 days.

4.25 CONCRETING IN WATER RETAINING STRUCTURES

GENERAL REQUIREMENTS

The basic specifications as regards 'mix' design, placing, compacting, curing etc. shall conform to the requirements as specified herein before in this Chapter. Over and above the materials and workmanship shall conform to the stipulations of IS: 3370 (Part-I & II)-2021 to make dense and impervious concrete. As specified herein before all the construction joints shall be provided with approved Chemical treatment. The expansion and construction joints, if any, shall be provided with the requirements as specified in the drawing or as directed by the Engineer.

© 2024 MECON Limited
All rights reserved

4.26 APPLICATION OF LIVE LOAD

The designated live load shall be allowed on any structure only after 28 days, after proper curing is carried out on the last concrete poured in structure.

4.27 FOAM CONCRETE

This shall be of average 50mm thickness or as specified or as shown on the drawings. This may be laid in in-situ in suitable panels or in precast blocks. The insulating properties shall be such that the thermal conductivity shall not exceed
0.125 Kcl m/m2h/degree C. The weight of the insulating material shall be from
0.5 to 0.75 gm/cm3, strength not less than 5 Kg/sq.cm or (0.5N/sq.mm.). In general, the main ingredients of Foam Concretes are cement, fly ash and foaming agent and the work shall be carried on by specialised Agencies/Companies. Before starting the laying of foam concrete sample shall be prepared at site and got tested for approval of the Engineer.

The foam concrete laid shall be sufficiently strong to take the usual work loads and standard loads expected on the roof. Any damaged portion shall be removed and replaced forthwith. Approval of the Engineer shall be taken before laying the waterproofing over the insulation.

While laying the foam concrete, sample batches of mix shall be kept for test if so desired by the Engineer.

5.0 MASONRY

5.1 GENERAL

This specification deals with masonry and allied works in foundation, plinth and superstructure.

© 2024 MECON Limited
All rights reserved

5.2 MATERIALS

For specifications of materials Part-I shall be referred.

5.3 SELECTION OF MORTARS

Mortar for masonry shall conform generally to IS: 2250-1981 "Code of Practice for Preparation and Use of Masonry Mortars", and proportion shall be as specified in the drawing or in the Schedule of Items.

5.4 CEMENT MORTAR

5.4.1 Cement mortar shall be prepared by mixing cement and sand in specified proportion. It is convenient to take unit of measurement for cement as a bag of cement weighing 50 Kg equivalent to 0.035 cubic metre. Sand is measured in boxes of suitable size (say of 40 x 35 x 25 cm). It shall be measured on the basis of dry volume. In case of damp sand, the quantity shall be increased suitably to allow for bulkage in accordance with IS:2386-1963 (part-III) or by any approved method.

5.4.2 The mixing of the mortar shall be done preferably in a mechanical mixer. This condition may be relaxed by the engineer taking into account the nature, magnitude and location of the work.

If mixed in the mixer, cement and sand in the specified proportion shall be fed in the mixer and mixed dry thoroughly, water shall be then added gradually and wet mixing continued for at least 3 minutes. In case of hand mixing also after mixing dry on a water-tight masonry platform, water shall be added and the mortar turned over and over, backward and forward several times.

5.4.3 Fresh mixed mortar, in case becoming stiff due to evaporation of water may be retempered by adding water as frequently as needed to restore the requirement of the consistency but this shall be permitted only upto a

© 2024 MECON Limited
All rights reserved

maximum of 2 hours from the time of addition of cement in the mortar.

5.5 BRICK WORK (SPECIFICATION OF FLY ASH BRICKS ADDED IN ANNEXURE)

5.5.1 STORAGE AND HANDLING BRICKS

Bricks shall not be dumped at site. They shall be carefully handled and carefully stacked in regular tiers to avoid breakage and defacement of bricks and prevent contamination by mud or other materials. The supply of bricks shall be so arranged that as far as possible at least two days' requirement of bricks is available at site at any time. Bricks selected for different situations of work shall be stacked separately.

5.5.2 SOAKING & CLEANING BRICKS

Bricks required for masonry shall be cleaned to be free from dirt, dust and sand and fully soaked in clean water by submerging in vats before use, till air bubbling ceases. The bricks shall not be too wet at the time of use. After soaking they shall be removed from the tank sufficiently early so that at the time of laying they are skin dry and stacked on a clean space.

5.5.3 SETTING OUT

The building lines shall be set out by the Contractor as per clause 7 of IS: 2212-1991 and got checked by the Engineer.

5.5.4 LAYING OF BRICKS

5.5.4.1 Brickwork in general shall be as per IS 2212-1991. Bricks shall be laid in English bond, unless otherwise specified, with frogs upward over a full bed of evenly laid mortar, and slightly pressed and tapped into final position to the lines levels and shape as shown in the drawing fully embedded in mortar. All joints including inside faces shall be flushed and packed. Not more than 8 courses shall

© 2024 MECON Limited
All rights reserved

generally be laid in a day. The first course itself shall be made horizontal by providing enough mortar in the bed joint to fill up any undulations. The horizontality of courses and the verticality of wall shall be checked very often with spirit level and plumb bob respectively.

5.5.4.2 Horizontal joints shall be truly horizontal and vertical joints shall line up in every alternate course. The joints shall not exceed 10 mm in thickness and shall be well finished and neatly struck. The joints shall be kept uniform throughout the brick work. All the brick joints of the face works shall be neatly raked out to a minimum depth of 15 mm with the help of raking tools and the faces of brick wall cleaned with wire brush to remove any splashes of mortar before the close of the day's work, while the mortar is still green and the last brick layer shall be cleaned with wire brush and the frogs free from mortar.

5.5.4.3 Walls coming in contact with R.C.C. structures shall perfectly be bonded with M.S. inserts or lugs where shown on drawings and the sides butting against the R.C.C structures neatly and efficiently flashed and packed with rich mortar & cement slurry at no extra cost (cost of M.S. inserts or lugs used shall be measured and paid separately under relevant items). Where such lugs are not required to be provided, brick work shall be built tightly against columns, slabs or other structural parts, around door and window frames with proper distance to permit caulked joint. Where drawings indicate structural steel column or beam to be partly or wholly covered with brick work, bricks shall be built closely against all flanges and webs, with all spaces between steel and brick work filled solid with mortar not less than 10 mm thick.

5.5.4.4 Damaged or broken brick or brick bats shall not be used in brick work. Cut bricks may be used to complete bond or as closers or around irregular openings.

5.5.4.5 Bricks shall not be thrown from heights to the ground, but shall be handled carefully and put gently in position to avoid damaging their edges.

© 2024 MECON Limited
All rights reserved

5.5.4.6 Selected bricks of regular shape and dimension shall be used for face work.

5.5.4.7 Making of grooves, sleeves and chases shall be done, during the construction, to the lines, levels and position as shown in the drawing or as instructed by the Engineer. Such sleeves shall slope outward in external walls so that their surface cannot form channels for the easy passage of water inside.

5.5.4.8 Fixtures, plugs, frames,pipes, inserts etc., if any, shall be built in at the right places to the lines & levels as shown in the drawings while laying the course and not later by disturbing the brick work already laid.

5.5.4.9 Brick walls of one brick thick or less shall have one selected face in true plane and walls more than one brick thick shall have both the faces of wall in true plane.

5.5.4.10 All connected brick work shall be carried out simultaneously with uniform heights throughout the work, and in exceptional cases, with the approval of the Engineer, the brick work built in any part of the work may be lower than another adjoining wall/connected wall by a maximum of one metre and the difference in height of adjoining wall/connecting wall shall be raked back according to bond by stepping at an angle not steeper than 45 degree, without sacrificing the necessary bond, horizontality of layers, verticality of joints and the wall. Toothing shall not be allowed in brick work, for raking back. The top layer just below the R.C.C slab or beam shall be laid with frogs down over a layer of mortar on full width.

5.5.4.11 OPENINGS IN BRICK WORK

Openings shall be made in brick work, which may be of any shape, size, at all levels, heights or depths, including round openings, as shown in the drawing or as directed by the Engineer, maintaining the necessary bond using a minimum of cut bricks. Openings in external face walls, the

© 2024 MECON Limited
All rights reserved

sills, jambs, soffits of opening may be rebated and the sill shall be sloped slightly for drainage of rain water.

5.5.4.12 All exposed brick work shall be rubbed down, thoroughly washed, cleaned and pointed as specified. Where face bricks of specific quality are used the same shall be rubbed with carborundum stone.

5.5.5 HALF-BRICK MASONRY

Half-brick work shall be done in the same manner as for brick work except that all courses shall be laid in stretchers. Both faces shall be true to plane and the joints raked on both faces.

Where reinforcement is considered necessary or specified and shown in drawing, M.S. bars or hoop iron shall be provided as stipulated in the Schedule of Items or as directed by the engineer. The reinforcement shall be cleaned of rust and loose scale with a wire brush, and shall be laid straight on the mortar and lapped with the dowel bars provided in the column, securely anchoring them at their ends where the half-brick wall butts. The batching of mortar usually shall be in the proportion of 1:4 or as stipulated in the Schedule of Items. Half of the mortar for the joints shall first be laid and the other half laid after the reinforcement is laid in position, so that the reinforcement is fully embedded in position.

5.5.6 BRICK ON EDGE MASONRY

The work brick on edge masonry wall in superstructure shall be done in the same manner as mentioned for brick work except that it shall always be reinforced with wire mesh netting of approved variety as specified in the item and embedded in cement mortar at interval as specified in the Schedule of Items. The wire netting shall be continuously laid and securely anchored with the dowel bars provided & projecting from the walls/RCC structure or steel structures at their ends where brick on edge wall butts. The batching of mortar usually shall be in the proportion of 1:3 or as stipulated in the Schedule of Items.

© 2024 MECON Limited
All rights reserved

5.5.7 PROTECTION OF BRICK WORK

The brick wall shall be protected and covered with gunny bags or water proof sheets from the effects of inclement weather, rain, frost, etc., during the construction and until the mortar sets. Care shall be taken during construction that the edges of jambs, sills and soffits of openings are not damaged.

5.5.8 CURING

All brick works shall be kept moist for 10 days after laying.

5.5.9 SCAFFOLDING

5.5.9.1 Necessary and suitable scaffolding shall be provided at all heights to facilitate the construction of brick wall. Scaffolding shall be sound, strong and all supports and other members shall be sufficiently strong and rigid, stiffened with necessary bracings and shall be firmly connected to the walls securing them against swing or sway. Planks shall be laid over the scaffolding at required levels. Scaffolding shall preferably be of tubular steel, although the Engineer may permit other material, depending upon the circumstances.

5.5.9.2 Scaffolding shall be double, having two sets of vertical supports, particularly for the face wall and all exposed brick work. Single scaffolding may be used for buildings upto two storeys high or at other locations, if permitted by the Engineer. In such case the inner ends of horizontal members shall rest in holes provided in header course only. Such holes shall not be allowed in pillars under one metre in width, or immediately near the skew backs or arches. The holes thus left in masonry shall be filled with bricks set in rich mortar and the surface made good on removal of scaffolding.

© 2024 MECON Limited
All rights reserved

5.5.9.3 If for any reason the Contractor is required to erect scaffolding in property other than that belonging to the Owner, including municipal corporation or local bodies, necessary permission shall be obtained by the Contractor from the appropriate authorities and necessary licensing fees if any shall have to be borne by him.

5.5.9.4 All scaffoldings once erected shall be allowed to remain in position, efficiently maintained by the Contractor, till all the finishing works required to be done are completed and shall not be removed without the approval of the Engineer.

The Contractor shall allow workmen of other trades to make reasonable use of the scaffolding without any extra cost.

5.6 STONE MASONRY

5.6.1 GENERAL

All aspects of the work shall be in conformity with the "Code of Practice for Construction of Stone Masonry, IS: 1597 (Part-I & II)-1992. Relevant clauses under brick work, such as setting out, making chases, openings, fixing frames and plugs, protection, curing, scaffolding etc., shall apply to stone masonry and concrete block masonry.

5.6.2 MORTAR

The mortar used shall be as specified in the Schedule of Items or drawing.

5.6.3 HOLES AND PLUGS

Holes in stone walls shall be left for water supply, plumbing, sanitation, electrification, etc., where shown on drawings or ordered by the Engineer as the work proceeds. These holes shall, on completion, be made good to match with the

adjoining wall. The Contractor shall provide and fix wooden plugs, water supply piping and electric conduit pipes etc. where so specified.

© 2024 MECON Limited
All rights reserved

5.6.4 RANDOM RUBBLE MASONRY

5.6.4.1 LAYING

All stones shall be wetted and cleaned of all dust and loose materials before laying. Stones shall be laid on their natural beds, fitted carefully to the adjacent stones to form neat and close joints fully packed with mortar and chips and spalls of stone may also be used wherever necessary to avoid thick mortar bed or joints. Walls shall be carried to plumb or to the specified batter. Stones may be brought to level course at plinth, window sills and roof levels and the leveling shall be done with concrete comprising of 1 part of the mortar as used for the masonry and 2 parts of 20 mm down graded hard stone chips at no extra cost. Bond shall be provided by fitting in closely the adjacent stones and by using bond stones running through the thickness of wall in a line from the face to back with at least one bond stone, or a set of bond stones, for every 0.5 sq.m. of the wall surface. Face stones shall extend and bond well into the backing. These shall be arranged to break joints as much as possible, and to avoid long vertical lines of joints.

5.6.4.2 QUOINS

Quoins shall be of selected stones, neatly dressed with hammer or chisel to form the required angle and laid header and stretcher alternately. No quoin stone shall be smaller than 0.025cum (25dcum in volume and it shall also not be less than
300mm in length, 25% of them being not less than
500 mm in length).

5.6.4.3 JOINTS

The stones shall be so laid that the joints are fully packed with mortar and chips and face joints shall not be more than 20 mm thick. When plastering or pointing is not required to be done, the joints shall be struck flush and finished at the time of lying, otherwise the joints shall be raked to a minimum depth of 20 mm by raking tool

© 2024 MECON Limited
All rights reserved

during the progress of work, when the mortar is still green.

5.6.5 COURSED RUBBLE MASONRY - FIRST SORT

5.6.5.1 LAYING

All stones shall be wetted before use. The walls shall be carried up truly plumb or to specified batter. All courses shall be laid truly horizontal and all vertical joints shall be truly vertical. The height of each course shall not be less than 15 cm nor more than 30 cm.

Face stones shall be laid alternate headers and stretchers. No pinning shall be allowed on the face. No face stone shall be less in breadth than its height and at least one third of the stones shall tail into the work for length not less than twice their height.

The hearting or the interior filling of the wall shall consist of stones carefully laid on their proper beds in mortar, chips and spalls of stone being used where necessary to avoid thick beds of joints of mortar and at the same time ensuring that no hollow spaces are left anywhere in the masonry. The chips shall not be used below the hearting stone to bring these upto the level of face stones. The use of chips shall be restricted to the filling of interstices between the adjacent stones in hearting and these shall not exceed 10% of the quantity of stone masonry. The masonry in a structure shall be carried up regularly but where breaks are unavoidable, the joints shall be raked back at an angle not steeper than 45 degree. Toothing shall not be allowed.

5.6.5.2 BOND STONES

Bond stone or a set of bond stones shall be inserted 1.5 to 1.8 metres apart, in every course.

© 2024 MECON Limited
All rights reserved

5.6.5.3 QUOINS

The quoins, shall be of the same height as the course in which these occur. These shall be at least 45 cm long and shall be laid stretchers and headers alternately. These shall be laid square on the beds, which shall be rough-chisel dressed to a depth of at least 10 cm. In case of exposed work, these stones shall have a minimum of 2.5 cm wide chisel drafts at four edges, all the edges being in the same plane.

5.6.5.4 JOINTS

All bed joints shall be horizontal and all side joints vertical. All joints shall be fully packed with mortar, face joints shall not be more than one cm thick.

When plastering or pointing is not required to be done, the joints shall be struck flush and finished at the time of laying. Otherwise, the joints shall be raked to a minimum depth of 20 mm by raking tool during the progress of work, when the mortar is still green.

5.6.6 COURSED RUBBLE MASONRY - SECOND SORT

5.6.6.1 LAYING

Shall be as specified in 5.6.5.1 except that the use of chips shall not exceed 15% of the quantity of stone masonry, and stone in each course need not be of the same height but more than two stones shall not be used in the height of a course.

5.6.6.2 BOND STONE, QUOINS

Shall be as specified for first sort respectively.

© 2024 MECON Limited
All rights reserved

5.6.6.3 JOINTS

All bed joints shall be horizontal and all side joints vertical. All joints shall be fully packed with mortar, face joints shall not be more than 2 cm thick.

When plastering or pointing is not required to be done, the joints shall be struck flush and finished at the time of laying. Otherwise, the joints shall be raked to a minimum depth of 20 mm by raking tool during the progress of work, when the mortar is still green.

5.7 HOLLOW CONCRETE BLOCK MASONRY

5.7.1 Construction of hollow concrete masonry shall be done in accordance with procedures laid down in IS: 2572-2005. General procedures for construction shall conform to IS: 2212-1991 except for the following :

5.7.2 STORAGE, HANDLING AND PREPARATION

The blocks shall be stored in stable stacks over planks or other supports with sufficient care taken to prevent ingress or moisture.

Blocks shall be handled carefully to avoid cracking. All damaged units shall be rejected and removed from site.

Blocks need not be wetted before or during placement. Unless the climatic condition so require, the top and sides may be slightly wetted.

5.7.3 MORTARS

Mortar for use in hollow concrete block masonry shall be made from cement, slaked lime and sand unless otherwise specified. The mix preparation shall be as recommended in Table-I of IS: 2572-2005. Preparation of mortar shall be in accordance with IS: 2250-1981.

© 2024 MECON Limited
All rights reserved

5.7.4 LAYING

Laying of block for first and subsequent courses and requirements of horizontal and vertical joints shall be as described in IS: 2572-2005. Use of hollow blocks in foundations shall be avoided. Use of blocks filled with sand and blocks filled with 1:3:6 concrete for foundation courses, plinths and basements shall be done with approval of Engineer. Closure blocks of superstructure shall have all openings battered with mortar. A course of solid concrete block masonry shall be provided under door and window openings or a 10 cm thick precast concrete sill block shall be provided under windows. This course shall extend at least 20 cm beyond the openings on either side. Solid blocks or hollow blocks filled with 1:3:6 concrete shall be used for jambs or fixing of hold fasts etc., Similarly solid blocks or U- shaped blocks filled with 1:3:6 concrete shall be used for roof course. They shall be finished smooth at top with 1:3 cement mortar and covered with a coat of crude oil, craft paper or oil paper for free roof movement.

5.7.5 BOND

Wherever two walls intersect, bond between at least 50% of the units intersecting shall be provided. If intersecting walls are laid separately pockets shall be left in the first wall at a maximum vertical spacing of 20 cm for the corresponding course of second wall to be built into these pockets.

Pilasters shall be of twice the thickness. Hollow blocks shall not be used for isolated piers unless they are filled with 1:3:6 concrete.

© 2024 MECON Limited
All rights reserved

6.0 PLASTERING AND POINTING

6.1 MATERIALS

The specification of materials shall conform to the requirements as specified in Part-I.

6.2 PLASTERING

6.2.1 GENERAL

Plastering shall be done in accordance with provisions of IS: 1661-1972. Mix proportions of mortar for plastering and thickness of plaster shall be as given either in the drawing, or as per Schedule of Items or as directed by the Engineer. For special plaster work, necessary admixtures shall be added to mortar in required proportion as per manufacturer's specifications or as specified herein. The thickness mentioned in the Schedule of Items shall be minimum thickness.

6.2.2 PREPARATION OF SURFACE

The surface to be plastered shall be cleaned of all extraneous matter and rubbish. In masonry the joints shall be raked to a minimum depth of 12 mm and cleaned with wire brush. Concrete surfaces to be plastered shall be roughened and hacked to form key for plastering. All plastered surfaces shall be finished smooth with a wooden float in one plane and all internal angles shall be finished slightly rounded. If desired by the Engineer, any unevenness shall be rubbed down by carborundum stones. The surface to be plastered shall be wetted evenly before the application of plastering. Trimming of projections on brick/concrete surfaces wherever necessary shall be done.

For one coat plastering the plaster shall be laid slightly thicker than the specified thickness and the surface then leveled with flat wooden float to the required thickness. For two coat plaster work, the first coat (usually half of total

© 2024 MECON Limited
All rights reserved

thickness) shall be applied as detailed above except that the surface shall be left rough and keys formed for the application of second coat. The second coat shall be laid on with a wooden float to the specified thickness and shall be applied a day or two after the first coat has set, but has not dried up.

Cement mortar for plastering work shall be used within 30 minutes after adding water to cement and should be kept agitated at intervals of 20 minutes.

If specified cement punning shall be done over the plastered surface by sprinkling neat cement powder evenly on the surface and rubbed smoothly with a trowel to give a fine coating. The plaster shall be kept wet for at least seven days and protected from extreme temperature and weather during this period

The arises of doors and windows shall have richer mortar 1:3 in a width of 75 mm on either side or as required at respective location.

6.2.3 Concrete beams, slabs, columns etc. framing into masonry are to be plastered along with masonry walls with these edges wrapped with chicken wire mesh of gauge 24. Overlapping of mesh shall be minimum 75 mm on either side of the edge of the concrete element. Minimum lap for chicken wire mesh shall be 50 mm.

6.3 CEMENT POINTING

6.3.1 Where shown on drawing, Schedule of Items, or as directed by the Engineer, exposed brick faces shall be cement rule pointed. The mortar shall be raked out of the joints to a depth of 12 mm. The dust shall be brushed out of the joints and the wall well wetted.

Unless otherwise specified the pointing shall be made with cement and sand mixed in proportion 1:3. The joints of the pointed work shall be neatly finished truly vertical and horizontal or as directed and the lines shall be

© 2024 MECON Limited
All rights reserved

kept wet till the cementing material has set and become hard. If required, the whole brick face shall be rubbed and polished with fine grade of carborundum stones. Particular care shall be taken to see that no brick face or brick edge is damaged during this work.

6.3.2 FLUSH POINTING

The mortar shall be pressed into the joints and shall be finished flush and levelled. The edges shall be neatly trimmed with trowel and straight edges.

6.3.3 RULED POINTING

The joint shall be initially formed as for flush pointing and then, while mortar is still green, a groove of required shape and size shall be formed by running a forming tool straight along the centre line of the joint till a smooth and hard surface is obtained. The vertical joints shall also be finished in similar way. The pointing line shall be uniform in width and truly horizontal in case of floors and ceilings.

6.3.4 CUT OR WEATHER STRUCK POINTING

The mortar shall first be pressed into joints. The top of the horizontal joints shall then be neatly pressed back by about 3mm with the pointing tool so that the joint is sloping from top to bottom. The vertical joint shall be ruled pointed. The junctions of vertical joints with the horizontal joints shall be at true right angles.

6.3.5 Raised and cut pointing

This type of pointing shall project from the wall facing with its edges cut parallel so as to have a uniformly raised band about 6mm raised and width 10mm or more as directed. The pointing shall be finished to a smooth but hard surface. the superfluous mortar then shall be cut off from the edges of the lines and the surface of the masonry shall also be cleaned off all the mortar.

© 2024 MECON Limited
All rights reserved

6.3.6 CURING

The pointing shall be kept wet for 7 days. During this period it shall be suitably protected from all damages.

6.3.7 POINTING ON BRICK FLOORING

Specification for this shall be conforming to under sub head "Pointing".

6.3.8 POINTING ON RANDOM RUBBLE STONE MASONRY

In such pointing, the mortar shall be simply struck off with a trowel and the work left showing the natural irregularities in line and surface of the stones themselves. Other specifications shall remain same as per Para 8.3 under sub head "Pointing".

6.4 ROUGH CAST CONCRETE FACING

6.4.1 The surface shall be prepared as for Cement plaster and then 2 cm backing coat of cement sand mortar 1:3 shall be applied. Subsequently, when the backing coat is in plastic state, a top coat 12 mm average thick cement and stone chips mixture in proportion 1:3 (stone chips 10 mm size and below) shall be applied by dashing the mixture on top with trowel to produce uniform rough texture. The mix shall again be dashed over the vacant spaces if any. The surface shall afterwards be cured for 10 days. After curing, the surface shall be brushed with hard wire brush to remove loose chips from the surface. A coat of cement wash shall then be applied, the cost of which shall be included in the rate of the item.

6.4.2 RENDERED SAND FACED CEMENT PLASTER

The surface shall be prepared as for cement plaster. The backing coat shall be 12 mm thick of cement plaster proportion 1:4 (1 cement and 4 sand) and keys shall be formed on the surface. After curing this coat sufficiently, the finishing coat 6 mm thick consisting of grey cement and

© 2024 MECON Limited
All rights reserved

screened coarse sand to required gradation (1:3) shall be applied and finished to the desired te texture to the satisfaction of the Engineer. The surface afterwards shall be cured for 7 days.

6.4.3 PLASTER MOULDING

Where specified, plaster moulding shall be strictly as per drawings and details, and shall run clean and true from proper templates and moulds, to the entire satisfaction of the Engineer. Rates shall include for brick or concrete cores and for any necessary dabbing in cement mortar or brick or metal lath curing and final finish as desired. Where desired, all angles in internal moulding work shall be covered to a radius of 50 mm or as directed without any extra charges.

6.4.4 FLOATING COAT WITH NEAT CEMENT

When the plaster has been brought to a true surface with the wooden straight edge, it shall be uniformly treated over its entire area with a paste of neat cement and rubbed smooth so that whole surface is covered with neat cement coating. Smooth finishing shall be completed with a trowel immediately and in no case later than half an hour of adding water to cement.

7.0 FLOORING, PAVING & FACING

7.1 SCOPE

Flooring, Paving and facing includes flooring, skirting and dado of various types encountered in plants, buildings, pavements etc. as described under respective heads. For the items which have not been covered up in this chapter completely or covered up only partly, specifications suggested by the manufacturers for the materials, surface preparation, workmanship and all other byeworks etc., shall be strictly followed. In addition to this the entire job will have to be carried out as per direction of the engineer, which shall be final.

© 2024 MECON Limited
All rights reserved

7.2 MATERIALS

Materials shall conform to Part-I of this series.

7.3 GENERAL

Flooring, skirting & dado may have to be done in discontinuous strips or areas to suit the needs of erection and commissioning of equipment. Flooring shall be done in close co-ordination with erection of equipment or other services and shall keep pace with the demands in respect of commissioning of individual equipment. No claims for extra shall be tenable for reasons of discontinuity of work or delay in having areas available for work.
Unless otherwise specifically included in the Schedule of Quantities or stated in the description of work, no extra shall be payable for works such as forming coves at internal angles, nosing at plinths, steps, window sills and stair treads, dishing in bath rooms, toilet & other places and cutting to line and fair finish to top edge of skirting and dado. Thickness mentioned shall be the minimum.

7.4 SUB-BASE

Flooring at ground level having sub-base of sand or earth as specified shall be laid in layers of 15 cm, watered and consolidated by rolling with hand roller or ramming with iron rammer and with butt ends of the crow bars. When filling reaches the required level, the surface shall be flooded with water for 24 hours, allowed to dry and then rammed and consolidated to avoid any settlement later. The thickness of the sub-base shall be as specified either in the drawing or in the Schedule of Items.

7.5 SUBGRADE

The surface shall be brought to the desired level before subgrade is laid, loose pockets shall be filled up and whole surface shall be consolidated by tamping. Vegetable growth and other decomposed matter, rubbish etc., shall be removed.

© 2024 MECON Limited
All rights reserved

7.5.1 HARD CORE SUBGRADE

Where hardcore subgrade is specified, stone/slag boulders/laterite boulders shall be laid closely stacked together, the longer edge being laid vertically. All interstices shall be filled with smaller particles of the same material or with gravel or red earth. The top surface shall be spread with loose moorum sufficient to cover the gap and to achieve uniform top surface. The surface shall then be ade- quately watered and rolled by roller.

Hard core shall be laid to form the desired slope in the finished floor.

7.5.2 BRICK KHOA SUBGRADE

Over burnt bricks shall be used for getting brick khoa as per sizes described in Schedule of Items. The khoa shall be laid uniformly and rammed in dry and wet conditions so as to get a uniform compact surface.

7.6 CEMENT CONCRETE FLOORING WITH INTEGRAL FINISH

Cement concrete shall be mixed, laid, consolidated and cured as described in Chapter "Concrete". Laying of concrete shall be done in alternate panels. The size and division of panels shall be as per direction of Engineer. The mix or grade of concrete shall be as specified in Schedule of Items.

The finished surface may be rendered smooth by trowel finishing to provide an appearance of fine and smooth textured surface and in panels or in geometric pattern as specified in Schedule of Items or as directed by Engineer.

Concrete Flooring with Granolithic Finish (Artificial Stone Flooring)

Granolithic finish shall either be laid monolithically over base concrete or separately over hardened base concrete. The subgrade shall be either brick khoa/lime

© 2024 MECON Limited
All rights reserved

concrete/cement concrete, as specified. Flooring shall be laid and finished according to IS: 5491-1967.

7.7.1 THICKNESS

Unless otherwise mentioned the thickness of flooring including topping shall be either 25 mm or 40 mm or 50 mm as shown on drawing/Schedule of Items. The net thickness of topping shall be 6 mm for 25 mm thick floor, 10 mm for 40 mm and 12 mm for 50mm thick floor. An additional allowance of 2mm in thickness of topping shall be made for cutting and grinding margin wherever polishing is specified in the item. The rate of the item will be inclusive of this.

7.7.2 MIX

For base or under bed course, the mix shall be 1:2:4 concrete, unless specified otherwise. The mix of the topping shall consist of 1 part cement :1 part coarse sand : 1 part coarse aggregated by volume or 1 part cement and 1 part stone chips. The coarse aggregate shall very hard like granite and well graded and size of chips shall be 3mm for 6mm topping & 6mm to 3mm for 10mm or more thick topping. Minimum quantity of water to get workability shall be added.

7.7.3 LAYING

a) LAYING OF MONOLITHIC TOPPING

The concrete base or underbed shall be laid as per specification "Cement Concrete" and levelled upto the required grade. The surface shall remain sufficiently rough to take the finish.

To prevent construction cracks, the panels shall be divided in square or rectangular pattern. For floor finish of 40mm thickness or above, the maximum panel area shall be 2.5 sq.m. with none of the sides exceeding 2.5m, however for lesser thickness these shall be 1.5sq.m. and 2.5m

© 2024 MECON Limited
All rights reserved

respectively. The dividing strip may be aluminium or glass or as specified and shall have the same depth as that of floor. Within about 2 to 3 hours of laying the base while it is still fully 'green' the topping shall be laid evenly to proper thickness and grade. The topping shall be pressed firmly and rigorously to form full bond with the base/underbed.

The laitance brought to the surface during compression shall be removed carefully without disturbing the stone chips. The surface shall then be lightly troweled to remove all marks and shall be left for sometime till moisture disappears from it. Fresh quantity of cement @ 2.2 Kg per sq.m. of the flooring shall be mixed to form a thick slurry and spread over the surface while concrete is still green. The cement slurry then shall be floated even & smooth. Polishing, if specified, shall be done with polishing machine and the portion where machine cannot be used manually to the satisfaction of the Engineer. If specified so the surface of the flooring shall be finished ribbed, chequered or laid in slope without any extra cost unless specified so in the item. On completion, the floor shall be kept flooded with water for 10 days and shall be adequately protected before it is sufficiently hard.

(b) LAYING OF TOPPING SEPARATELY ON HARDENED BASE

The sub base shall be laid as in clause 7.7.3. The surface of the base concrete shall be thoroughly brushed and cleaned free from all dirt, mortar droppings and laitance etc.. Where the surface has hardened too much, chipping or hacking of the surface may be necessary. The surface shall then be wetted with water for several hours and surplus water mopped. Neat cement slurry at 2.75Kg/sq.m. of surface shall be brushed into the clean surface. The topping then shall be laid as described in clause 7.9.3.

© 2024 MECON Limited
All rights reserved

7.7.4 GENERAL

The junction of the floors with all plaster dado or skirting shall be rounded of with 1:1 cement sand mortar & polished, if specified or shown in drawing.

7.7.5 CURING

Immediately after laying, the finish shall be protected against rapid drying. As soon as the surface had hardened sufficiently, it shall be kept continuously moist for at least 10 days by means of wet gunny bags or ponding of water on the surface. The floor shall not be exposed to use during this period.

7.7.6 GRINDING & FINISHING

Where grinding is specified, it shall start only after the finish has fully set. The grinding shall be done with carborundum stone of No. 60, then No. 80 and then 120 as per the method as specified in in-situ mosaic flooring. After final polishing, the floor shall be rubbed with oxalic acid and then wax polished.

7.8 DADO & SKIRTING WORK (GREY CEMENT SKIRTING/DADO)

A backing coat of 12 mm thick and 15 mm thick shall be applied on walls after proper dabbing of the surface for a finished thickness of 18 mm and 21 mm thick respectively, with cement plaster of proportion 1:4 (1 cement and 4 approved quality sand) or as specified. Over this a top coat 6mm/7mm thick consisting of one cement to one stone chips 3 mm nominal size shall be applied. If grinding and polishing specified, the same shall be done as per granolithic flooring with carborundum stones.

Flooring & Facing with Redoxide of Iron (Red Artificial Stone Flooring).

It shall consist of an underbed or base course and topping over already laid & matured concrete subgrade.

© 2024 MECON Limited
All rights reserved

7.9.1 THICKNESS

Unless otherwise specified the total thickness of the flooring shall be either 40 mm or 25 mm of which the topping shall not be less than 6 mm (net) for 25 mm thickness and 10 mm (net) for 40 mm thickness. The topping shall be of uniform thickness, the underbed may vary in thickness to provide necessary slopes. For vertical surfaces the total thickness shall be 18 mm, of which the topping thickness shall be 6 mm (net). Where grinding (cutting) & polishing is specified a minimum allowance of 2 mm shall be kept for cutting & polishing so that the net specified top thickness is achieved. All junctions of vertical with horizontal shall be rounded neatly to uniform radius of 25 mm or as shown in the drawing.

7.9.2 MIX

i) COURSE OR BASE COURSE

The underbed for floors and similar horizontal surfaces shall consist of a mix of 1 pert cement, 2 parts coarse sand and 4 parts 10 mm down graded stone chips by volume. For vertical and similar surfaces the mix shall consist of 1 part cement to
3 or 4 parts coarse sand by volume as
specified in the item.

ii) topping course

For the topping white cement and red oxide of iron pigment powder shall be dry mixed thoroughly (generally 10:1 by weight) to produce the desired colour when laid. The mix shall then be prepared with 1 part white cement (mixed with pigment) and 3 parts coarse sand by volume. The whole quantity required for each visible area shall be prepared in one batch to ensure uniform colour.

© 2024 MECON Limited
All rights reserved

7.9.3 LAYING

The underbed shall be laid in panels of maximum area 2.5 sq.m. each and no side shall be more than 1.5m long. For outdoor locations the maximum area shall be 2.0 sq.m. or as specified. The forms for the panels shall have perfectly aligned edges to the full depth of the total thickness of finish. Aluminium or glass dividing strips shall be used as forms. The underbed shall be laid compacted, levelled and brought to proper grade with a screed or float. The topping shall be placed after about 24 hours while the underbed is still somewhat 'Green' but firm enough to receive the topping. The surface of the underbed shall be roughhead for better bonding. The topping shall be rolled for horizontal areas and thrown and pressed for vertical areas to extract all superfluous cement and water to achieve a compact dense mass fully bonded with the underbed. The topping shall then be levelled up by troweling and finished smooth with a slurry made with already prepared cement and pigment mixture. About 2.0 kg of the mixture shall be consumed/per sq.m. for horizontal surface, and 1.0 kg for vertical surface.

7.10.1.2 MIX

i) UNDERBED COURSE

The underbed for floors and similar horizontal surface shall consist of a mix of 1 part cement, 2 parts sand and 4 parts stone chips by volume. The sand shall be coarse. The stone chips shall be 10 mm down well graded. Only minimum water to be added to give a workable consistency.

ii) TOPPING

Topping shall consist of cement (grey or white) as specified with or without colour pigment, marble powder and marble chips. The proportion of cement and marble powder shall be 3 parts of cement to one part of marble powder by weight. The proportion shall be inclusive of any

© 2024 MECON Limited
All rights reserved

pigments added to the cement. The proportion, to which pigments are mixed with grey or white cement to obtain various shades for the binder, shall be as specified in Table-I of IS: 2114-2018.

The proportion of marble chips and cement marble powder mix shall be 7 parts of marble chips to 4 parts of cement marble powder mix mixed by volume. Care shall be taken to ensure an even and uniform disposition of the marble chips.

7.10.1.3 LAYING

i) LAYING OF UNDERBED

The underbed shall be laid in panels in the same manner as that for artificial stone flooring. The panels shall not be more than 2 sq.m. in area of which no side shall be more than 2.0 m long. Cement slurry @ 2.75 kg/sq.m. shall be applied before laying over cement concrete/RCC surface/ plastered surface.

Dividing strips made of aluminium or glass shall be used for forming the panels. The strips shall exactly match the total depth of underbed plus topping. In case of in-situ dado work, the sections shall not be more than 60 cm x 60 cm and the aluminium, glass or any other material strips provided similarly.

ii) LAYING OF TOPPING

After laying, the underbed shall be leveled compacted and brought to proper grade with screed or float. The topping shall be laid after about 24 hours while the underbed is still somewhat 'green' but firm enough to receive the topping. A slurry of the mixture of cement and pigment already made shall be spread evenly and brushed in just before laying the topping. The topping shall be rolled for horizontal areas and thrown and pressed for vertical areas to extract all superfluous cement and water and to achieve a compact dense mass fully bonded with the

© 2024 MECON Limited
All rights reserved

underbed. The terrazo surface shall be tamped, troweled and brought true to the required level by straight edge and steel floats in such a manner that maximum amount of marble chips come up and are spread uniformly over the surface and no part of the surface is left without the chips. Excessive troweling should be avoided in early stages lest too much cement may come up the surface leading to surface cracking and requiring more grinding to expose marble chip.

7.10.1.4 CURING

The surface shall be left dry for air curing for about 12 to 18 hours and then cured by allowing water to stand on the surface or by covering with wet sack for seven days.

7.10.1.5 GRINDING & POLISHING

Grinding and polishing shall be done either by hand or by machine. In case of manual grinding, the process of grinding shall begin after 2 days while in case of machine grinding the process shall start after seven days after completion of laying. First grinding shall be done with carborundum stone of 60 grit size. The floor shall then be washed and cleaned to remove mud and grindings, a grout of cement and colouring pigment in same proportion of the topping shall be applied to cover the pin holes. The surface shall be cured for 5 to 7 days and then ground with machine fitted fine grit blocks (No. 120). The surface shall be again cleaned and repaired as mentioned above and shall be cured for 3 to 5 days. Finally the third grinding shall be done with machine fitted with fine grit blocks (No. 320) to

get even and smooth surface without pin holes. The finished surface should show the marble chips evenly exposed.

Where use of machine for polishing is not feasible/ possible rubbing and polishing by hand shall be done in the same manner as specified for machine polishing except that

© 2024 MECON Limited
All rights reserved

carborundum of coarse grade (No. 60, 80 and 120) for first, second & final polishing. After the floor is polished to the satisfaction of the Engineer, it shall be rubbed with oxalic acid and finally wax polished with 'Mansion' or similar approved floor polish to the entire satisfaction of Engineer. For good result, wax polishing shall be applied on the surface with the help of soft linen over a clean and dry surface and then the polishing machine fitted with bobs shall be run over it. Clean saw dust shall be spread over the floor surface and the polishing machine again operated so as to remove excess wax and leave glossy surface. Floor shall not be left slippery.
The manufacturer shall supply along with the tiles the grout mix containing cement and pigment in exact proportions as used in topping of the tiles.

7.10.2.1 MIX : UNDERBED

The underbed for floor and similar horizontal surfaces shall be 1 part lime putty : 1 part surkhi : 1 part coarse sand or 1 part cement : 3/4 parts coarse sand mixed with sufficient water to form a stiff workable mass. The thickness of underbed for the flooring shall be 20mm unless otherwise specified. For skirting and dado and all vertical surface it shall be about 12 mm thick and composed of 1 part cement 3 parts coarse sand.

7.10.2.2 LAYING

The underbed mortar shall be evenly spread and brought to proper grade and consolidated to a smooth surface. The base surface shall be roughened for better bond. Before laying the underbed, over the base/subgrade, a coat of cement slurry shall be applied over the subgrade. Before the underbed has time to set and while it is still fairly moist but firm, cement shall be hand dusted over it or cement slurry applied at 4.4Kg of cement per sq.m. and the tiles shall immediately be placed upon and firmly pressed by wooden mallet on to the underbed until it achieves the desired level. The tiles shall be kept soaked for about 10 minutes just before laying. The joints between tiles shall be

© 2024 MECON Limited
All rights reserved

as close as possible and not more than 1.5 mm wide.

Special care shall be taken to check the level of the surface and the lines of the joints frequently so that they are perfect. When tiles are required to be cut to match the dimensions these shall be sawn and edges rubbed smooth. The location of cut tiles shall be planned in advance and approval of the Engineer taken.

At the junction of horizontal surface with vertical surface the tiles on the former shall enter at least 12 mm under the latter.

After fixing, the floor shall be kept moistened allowed to mature undisturbed for 7 days. Heavy traffic shall not be allowed. If desired dividing strips as specified under Cl. 7.10.1.3 may be used for dividing the work into suitable panels.

7.10.2.3 GRINDING AND POLISHING

Procedure shall be same as in-situ terrazzo finished flooring. Grinding shall not commence earlier than 14 days after laying of tiles.

7.11 GLAZED TILE FINISHED FLOORING & FACING

This finish shall be composed of glazed earthen tiles with an underbed laid over a concrete or masonry base.

7.11.1 THICKNESS

Unless specified the total thickness shall be 21 mm for flooring & 18 mm for dado/skirting for the underbed.

The necessary cutting into the surface receiving the finish, to accommodate the specified thickness shall be done.

© 2024 MECON Limited
All rights reserved

7.11.2 TILES : GLAZED

These shall conform to the requirement of IS : 777. The tiles shall be of earthenware, covered with glazed white or coloured, plain or with designs, of 149 mm x 149 mm or 99mm x 99mm nominal sizes and 5,6 & 7 mm thick unless otherwise specified. Specials like internal and external angles, beads, covers, cornices, corner pieces etc., shall match. The top surface of the tiles shall be glazed with a gloss or matt unfading stable finish as desired by the Engineer. The tiles shall be flat and true to shape. The colour shall be uniform, and fractured section shall be fine grained in textures, dense and homogeneous.

The coloured tiles, when supplied, shall preferably come from one batch to avoid difference in colour.

7.11.3 MIX : UNDERBED

The mix for the underbed shall consist of 1 part cement and 3 parts coarse sand mixed with sufficient water or any other mix if specified and shall be 12mm thick minimum or as specified.

7.11.4 LAYING & FINISHING

The underbed mortar shall be evenly spread and brought to proper grade and consolidated to a smooth surface. Before laying the underbed, over the base/subgrade a coat of cement slurry shall be applied over the subgrade. Before the underbed has time to set and while it is still fairly moist but firm, cement shall be hand dusted over it and the tiles shall immediately be placed upon and firmly pressed by wooden mallet on to the underbed until it achieves the desired level. The joints shall be practically invisible and filled with non-staining white cement/white cement mixed with pigment for coloured tiles. Internal angles shall be provided with `specials'. Drains shall be provided with `specials'. The tiles shall be thoroughly cleaned after completion. The tiles shall be laid to the slope

© 2024 MECON Limited
All rights reserved

specified in the drawings and truly vertical on walls when used as skirting.

7.11.5 CURING & CLEANING

After flush pointing the joints, the surface shall be cured for 7 days by keeping it wet. The surface shall be then cleaned with soap or suitable detergent, washed fully and wiped with soft cloth to prevent scratching before handing over.

or coloured shade or patterns of colours approved by the Engineer before ordering the tiles. The surface shall be fine polished and sides machine cut, true to square.

When a single course of marble slab is to be fixed as in dado etc., the slabs shall be fixed as described below:

Mortar pads of 1:3 C.M. (1 cement : 3 coarse sand) of uniform width shall be stuck on to the wall at close intervals and the marble slabs shall be pressed on to them firmly. The remaining cavities if any shall then be filled with thin grout of cement mortar of the same proportion. The sound coming, on gently tapping of the slab, will indicate if there are hollows. When the hollow cannot be filled with grout and the finished slab continues to give a hollow sound on tapping, the slab shall be removed and reset. For the facia work where more than one course is required the marble slabs shall be of matching stand and veins to form architectural pattern as per drawings and shall be fixed in the same way as described above except for the horizontal joints of the slabs, where adjacent slabs shall be held together by a brass pin passing through a hole drilled into the slabs. In addition, wrought iron/dowels shall be provided to anchor the slabs to the wall. The metal cramps shall be counter sunk into the joints of the slab and it shall be located about a metre apart subject to a minimum of one for each slab for each horizontal joint.

The facing shall be fixed truly in plumb and in perfect line

© 2024 MECON Limited
All rights reserved

or curves as shown on the plans. The courses and joints shall be as directed by the Engineer. The surface shall be protected from sun and rain and cured for 10 days and shall be finally polished with carborundum stones as for skirting & dado of cast-in-situ terrazzo.

7.12 FLOORING/PAVING WITH HARDENER LIKE IRONITE

This will consist of a topping (incorporating iron particles) to bond with concrete base while the latter is 'Green'.

7.12.1 THICKNESS

Unless otherwise specified in the Schedule of Items, the total thickness of the floor with metallic hardener finish shall be 40 mm or 50 mm of which the topping shall be 10 mm (net) for 40 mm & 12 mm (net) for 50 mm

7.12.2 MATERIAL (METALLIC HARDENER)

The hardening compound shall be uniformly graded iron particles free from non- ferrous metal impurities, oil, grease, sand soluble alkaline compounds or other injurious materials. When desired by the Engineer, actual samples shall be tested.

7.12.3 MIX

Unless otherwise specified, the mix for underbed shall be of 1:2:4 concrete and stone chips shall be 12 mm down grade. For topping the proportion of the metallic hardener shall be as specified or as indicated by the manufacturer. However, in absence of any such direction 1 part metallic hardener shall be mixed dry with 4 parts cement, by weight. To this mixture 6 mm nominal size stone chips shall be added in proportion of 1 part cement (mixed with hardener) to 2 parts of stone chips by volume and uniformly mixed. Minimum quantity of water shall be added to make it workable.

© 2024 MECON Limited
All rights reserved

7.12.4 LAYING & FINISHING

The under bedding course of base course shall be laid as per specification of laying underbed for Red artificial stone flooring. The surface shall be roughened by wire brush as soon as possible. The finish top coat shall be laid while the concrete base is still fairly 'green' within about 3 hours of laying of the later. The finish shall be of uniform and even dense surface without trowel marks, pin holes etc. This topping layer shall be pressed firmly and worked vigorously and quickly to secure full bond with the concrete base. Just when the initial set starts the surface shall be finished smooth with steel trowel.

7.12.5 CURING

The finished floor shall be cured for 7 days by keeping it wet.
Chemical Resistant Tiles Flooring / Facing
(Either of natural stone or prepared tiles)

This shall include all varieties of special tiles used for specific chemical resistance function and an underbed over already laid concrete or masonry. The Contractor shall get it done by specialised manufacturer & get guarantee of its performance.

7.12.6 TILES

The chemical resistant tiles as detailed in the Schedule of Items shall be of the best indigenous manufacture unless otherwise specified and shall be resistant to the chemical described in the Schedule of Items. The tiles shall have straight edges, uniform thickness, plain surface, uniform non-fading colour and textures.

Usually the chemical resistant tiles shall not absorb water more than 2% by weight. The tiles shall have at least compression strength of 700 kg/cm2. The surface shall be abrasion resistant and durable.

© 2024 MECON Limited
All rights reserved

7.12.7 LAYING

The mortar used for setting or for underbed the tiles shall be durable and strong. The grout which shall be to the full depth of tile shall have same chemical resistant properties as that of tiles. Joints shall be pointed if so desired. The setting and fixing shall be according to the manufacturer's specification approved by the Engineer.

7.13 CHEMICAL RESISTANT IN SITU FINISHED FLOORING/FACING

Chemical resistant in situ finish shall be as called for in the Schedule of Items. About its performance the Engineer shall have to be fully satisfied by test results and examination of similar treatment already in existence. The Contractor shall get it done by a specialised manufacturer, get guarantee of performance from the organisation and pass it on to the owner in addition to his own guarantee.

7.14 ACCEPTANCE CRITERIA

The Contractors shall satisfy the Engineer specially for the workmanship of the following finished floor :
Level, slope, plumb as the case may be Alignment of joints, dividing strip etc. Colour, texture Surface finish. Thickness of joints including the workmanship in joints. Details at edges, junctions etc. Performance Precautions specified for durability.

8.0 DOOR & WINDOWS

8.1 FIXING

Door and window frames shall generally be built in at the time the walls are constructed. Alternatively, where permitted by the Engineer, the frames may be subsequently fixed into prepared openings for which purpose holes to accommodate the holdfasts shall be left at the time of construction. Where the frames are subsequently fixed into prepared openings in the wall such openings should be 25 mm more than the overall width of the door,

© 2024 MECON Limited
All rights reserved

window or ventilator frame to allow minimum 12mm plaster on each jamb. The height of the unfinished opening shall depend upon whether a threshold is required or not. While fixing the door care shall be taken to see that at least 6 mm space is left between the door and the finished floor. The M.S. clamps fixed to the frame shall be inserted in the holes and jammed in cement concrete M-15 or (1:2:4 mix) with 20 mm down graded stone chips after holding the frame in proper position to the line, level and plumb.
The size of the concrete block shall be 250 x 125 x 85mm unless otherwise specified.

8.2 TARRING

Timber in contact with earth, concrete, plaster or masonry shall be treated with boiling coal tar or 2 coats of wood preservative treatment like hot solingnum or creosite oil etc. before fixing the frame in position.

8.3 FITTINGS

Unless otherwise specified, three holdfasts shall be fixed on each side of a door frame, one at the centre point, and the other two at 30 cm from the top and the bottom of the door frames. In the case of windows and ventilators, a pair on each side shall be fixed at quarter points of the frames. Unless otherwise specified the hold-fasts shall be of mild steel plate 40 x 3 x 225 mm long, fish tailed at one end and screwed to the frame in the formed rebates.

Generally, each door shutter shall be fixed to the frame with three hinges of approved manufacture, one at the centre and the other two approximately 24 cm from the top and bottom of the shutter. Each window shutter shall be fixed to its frame with two hinges at the quarter points.

Locks, handles, door closers, stoppers etc., shall be fitted as shown in drawing or described in the Schedule of Items.

© 2024 MECON Limited
All rights reserved

9.0 METAL DOORS, WINDOWS AND ROLLING SHUTTERS

9.1 GENERAL

Doors, windows and ventilators etc., shall be truly square and flat, i.e. free from twist and warp. The general fabrication shall conform to IS:1038-1983 & IS : 1361-1978 as applicable.

9.1.1 Frames shall be constructed of sections which have been cut to length and mitred.
They shall be morticed, reinforced, drilled and tapped for hinges and lock and bolt strikes. Where necessary, frames shall be reinforced for door closers. Flash butt welding or any other suitable method which gives the desired requirement, with mitred corners shall be used. Rubber door silencers shall be furnished for the striking jamb. Loose "T" masonry anchors shall be provided. Frames shall finish flush with floor and adjustable floor anchors shall be supplied. Frames shall be brought to site with floor ties/weather bars installed in place. All frames shall be square and flat. Door thresholds shall be provided as shown on drawing. Doors without threshold shall have bottom tie of approved type.

9.1.2 The Contractor shall first submit for the approval of the Engineer, the name and address of the manufacturer whose metal casements and doors and windows he intends to use, together with typical drawings and specifications, describing the details of construction for each type of door/window/ventilator etc.

9.1.3 All steel doors, windows and ventilators shall be either galvanised or painted. All steel surfaces shall first be thoroughly cleaned free of rust, scale or dirt and mill scale by pickling or similar process and then shall be painted with one coat of an approved primer conforming to IS : 102-1962 before despatch. Alternatively they may be galvanised by the "Hot Dip" zinc spray or electro- galvanizing process as described in IS : 1361-1978.

© 2024 MECON Limited
All rights reserved

9.2 FIXING

Doors, windows and ventilators shall not be built in at the time the walls are constructed but shall be subsequently fixed into prepared openings, as laid down in IS : 1081-1960. Holes to accommodate the fixing lugs are to be left or cut, and the casements fixed after all the rough masonry and plaster work have been finalised. The lugs of the casement shall be jammed in cement concrete (15C Mark)/(1:2:4) mix after holding the casement in proper position, line and level.

The width of the clear unfinished opening in the wall should be 25 mm more than the overall width of the door frame to allow for plaster on each jamb. The height of the unfinished opening shall depend upon whether a threshold is required or not. While fixing the door, care shall be taken to see that at least 6 mm space is left between the door and the finished floor.

9.3 FITTINGS

Hardware shall be fixed as late as possible, preferably just before the final coat of paint is applied. It shall be fitted in a workmanlike manner, so that it may not work loose and in such a way that screws and pins are not marked and mutilated by hammers and screw drivers. It shall be tested for correct operation. Where specified, doors shall be fitted with a three-way bolting device which can be operated from outside as well as inside, and a locking system, which can similarly be operated from either side. Solid steel bolt handles shall be provided, one on the outside and one on the inside of each shutter. In case of doors provided with a service door, the lock shall be fitted on the service door. All materials shall be the best procurable and shall be approved by the Engineer.

© 2024 MECON Limited
All rights reserved

9.4 NORMAL STEEL PLATE DOORS

Steel doors may be of the hinged type or sliding/ folding type, single shutter or double shutter, and of single-walled or double walled construction, as specified on the drawings or Schedule of Items. All doors shall be provided with a sturdy frame and hold fasts for fixing into the wall. Unless otherwise specified, the frame shall be prepared from mild steel angles of size not less than 65 x 65 x 6 mm electrically welded at the corners and the shutter shall be made from flat steel sheet of 18 gauge or 1.25mm thickness with a frame of mild steel angles not less than 50 x 50 x 6 mm all round, suitably braced. The whole shutter shall be of welded construction and shall be hung at the sides by means of three or four hinges as specified.

9.4.1 DOUBLE PLATE FLUSH DOOR SHUTTERS

Door shutters shall be 45 mm thick, completely flush design and shall comprise of two outer sheets or 18G or 1.25mm thick steel sheets, rigidly connected and reinforced inside with continuous vertical 20G or 0.99mm thick stiffeners, spot welded in position at not more than 150 mm on centres. Both edges of doors shall be joined and reinforced full height by steel channels placed immediately inside and welded to the door faces. Top and bottom of doors shall be reinforced horizontally by steel channels running full width of door. Doors shall not have more than 2.5 mm clearance at jambs and head, shall have proper level on lock

stiles and rails and shall be reinforced at corners to prevent sagging or twisting. Pairs of double doors shall have meeting style edges bevelled or rebated. Where shown on drawing, or in the Schedule of Items, the doors shall be sound-deadened by filling the inside voids with mineral wool or other suitable approved materials. Doors shall be mortised, reinforced, drilled and tapped in shop for hinges, locks and bolts. They shall also be reinforced for

© 2024 MECON Limited
All rights reserved

closers, push-plates and other surface hardwares where necessary. Any drilling and tapering required for surface hardware shall be done at site. Where shown in drawing, provisions, shall be made for fixing glazing, vision panels, louvres etc. Glazing mouldings shall be of 18G or 1.25mm thick steel or extruded aluminium sections with profiles shown in drawing and suitable for fixing 6 mm glass. Louvre blades shall be V or Z shaped sections.

9.4.2 SINGLE SHEET DOOR SHUTTERS

Single sheet doors shall be made from best quality 18g/1mm mild steel sheets, and shall present a flush surface on the outside. The inside shall be stiffened with a semi-tubular edge and central stiffening rail which shall convey the lock and other fixture. The frames shall be made from best quality steel sections. Wherever required or shown on drawings, provision for fixing glass panes, louvres etc., shall be made.

The manufacturing shall done as specified in "Double Plate Flush Door Shutters".

9.5 PRESSED STEEL DOORS

All pressed steel doors shall be obtained from an approved manufacturer. The frame and shutters shall be fabricated from cold rolled or pressed steel sections. Unless otherwise specified, the thickness of all sheets used for frames shall be not less than 5 mm. The shutters shall be made of sheet steel of 2 mm thickness for single shutter doors and double shutter doors with or without service door. The plates shall be adequately stiffened with suitably placed stiffeners

The double-walled door shutter shall consist of two plates each 2.5 mm thick, separated by a gap of 33 mm in between making an overall thickness of 38 mm or as shown in drawing. The plates shall be adequately stiffened by means of suitably spaced horizontal steel stiffeners.

© 2024 MECON Limited
All rights reserved

9.6 STEEL WINDOWS, SASHES, VENTILATORS, ETC.

These shall conform to IS : 1038-1983 and IS : 1361-1978 as appropriate and as shown in drawings. The details as called for in the above codes shall be applicable for coupling mullions, transoms, weather bars, pivot arrangements for ventilators, etc.

9.6.1 Where composite unit openings are shown in drawings, the individual window units shall be joined together with requisite transoms and mullions. Where aluminium glazing beads are specified, they shall be extruded aluminium channel
9.5 mm x 1.6 mm (Indal Section No. 2209) unless otherwise shown in drawings.

All welds at the corner of casement shall be done by flash butt welding process or any other suitable method which gives the desired requirement and dressed flush on all exposed and contact surfaces.

9.7 COLLAPSIBLE GATE (STEEL)

Mild steel collapsible gates shall be obtained from an approved manufacturer. These shall be of mid bar type made out of double channels each 20 x 10 x 2 mm with 20 x 5 mm diagonals and shall be top hung with roller bearings, and fitted with locking arrangement.

Collapsible gates under 3.0 metre height shall generally have 3 sets of lattices and those over 3.0 metre height, 4 sets of lattices. Guide tracks shall be fitted at the top and bottom, of T-iron 40 x 40 x 6 mm with 40 mm dia bearings in every fourth double channel

9.8 STEEL ROLLING SHUTTERS AND GRILLS

Unless otherwise specified the shutters shall conform IS:6248-1979. Laths for rolling shutters shall be made from tested bright cold rolled, annealed M.S. strips, not less

© 2024 MECON Limited
All rights reserved

than 0.9 mm thick for shutters upto 3.5 M wide and not less than 1.25 mm thick for shutters above 3.5 M wide and machine rolled at 75 mm rolling centres, interlocking with each other. The profile will be such as to prevent excessive deflection under specified wind load.

Rolling grills shall be constructed out of 6/8 mm dia rods at 35 mm on centres running horizontally flexible connected with vertical links spaced not more than 200 mm centres. Alternatively, rolling grills shall be made from perforated laths of approved design reinforced with 6 mm dia rods. End locks shall be heavy type and shall be provided at each end of alternate laths unless specified otherwise. Bottom bars shall be finished with two angles not less than 6 mm thick for external shutters. When shown in drawings, a flexible weather strip shall be applied to make tight contact with the floor. Guides shall be of such depth as to retain the shutter under a wind pressure of 150 kg/sq.m. or as specified. Shafts shall be of steel pipe of sufficient size to carry the torsional load with a maximum deflection of 1/360 th of span. Grease packed ball bearings or bushings shall be provided for smooth trouble free operation.Hoods shall be formed of not less than 20 gauge or 0.90 mm thick sheet mild steel, suitably, reinforced to prevent sag.
Locks shall be slide bolt and hasp, or cylinder lock operable from both sides. Provision for securing hand chain with padlock, removable handle for hand cranks etc, shall be made as described in scheduled of items and as directed by the Engineer.

9.8.1 Laths for rolling shutters shall be made from tested bright cold rolled, annealed M.S. strips, not less than 0.9 mm thick for shutters upto 3.5 M wide and not less than 1.25 mm thick for shutters above 3.5 M wide and machine rolled at 75 mm rolling centres, interlocking with each other. The profile will be such as to prevent excessive deflection under specified wind load. Rolling grills shall be constructed out of 6/8 mm dia rods at 35 mm on centres running horizontally flexible connected with vertical links spaced not more than 200 mm centres.

© 2024 MECON Limited
All rights reserved

Alternatively, rolling grills shall be made from perforated laths of approved design reinforced with 6 mm dia rods.

End locks shall be heavy type and shall be provided at each end of alternate laths unless specified otherwise. Bottom bars shall be finished with two angles not less than 6 mm thick for external shutters. When shown in drawings, a flexible weather strip shall be applied to make tight contact with the floor. Guides shall be of such depth as to retain the shutter under a wind pressure of 150 kg/sq.m. or as specified. Shafts shall be of steel pipe of sufficient size to carry the torsional load with a maximum deflection of 1/360 th of span. Grease packed ball bearings or bushings shall be provided for smooth trouble free operation. Hoods shall be formed of not less than 20 gauge or 0.90 mm thick sheet mild steel, suitably, reinforced to prevent sag. Locks shall be slide bolt and hasp, or cylinder lock operable from both sides. Provision for securing hand chain with padlock, removable handle for hand cranks etc, shall be made as described in scheduled of items and as directed by the Engineer.

9.8.2 MANUALLY OPERATED SHUTTERS/GRILLS

Manually operated shutters shall be easily operable by one person. The speed of operation shall be about 0.3 metres per second. In general, manually operated shutters shall be push pull type for openings upto 9 sqm in area. Larger shutters shall be either chain and gear operated or crank and gear operated. The crank/handle shall be removable. All shutters shall be lockable from one or both sides as described in Schedule of Item or as desired by the Engineer.

9.8.3 PRIMING COAT OF SHOP COAT

Shutters shall be painted with one coat of red lead or zinc chromate primer after they are inspected and found in order and acceptable. Where specified, doors shall be

© 2024 MECON Limited
All rights reserved

galvanized and subsequently painted one coat of zinc chromate for adhesion of field coat.

9.8.4 ERECTION

Door shall be installed by the manufacturer or his authorised representative and all work shall be as per manufacturer's instructions. Any drilling or cutting to concrete, masonry etc., shall be made good after erection of shutters and all abrasion to shop coat shall be touched up. All electrical work shall be in strict accordance with prevailing Indian Electricity Rules.

9.8.5 INSPECTION

After completing the manufacture of the different components of the rolling shutter, an arrangement for shop inspection by the Engineer shall be made to check the conformity with approved shop drawings.

9.8.5.1 FIELD INSPECTION

After installing the shutters, the Contractor shall test the performance of the shutter in the presence of the Engineer. The doors shall be smoothly operable

under all ambient conditions. All control and locking devices shall give fault-free performance.

9.9 GUARANTEE

The Contractor shall give one year's guarantee for the successful operation of the shutters. This shall be supported by a separate and unilateral guarantee from the manufacturer of the shutters.

the Schedule of Items or approved by the Engineer. The method of glazing adopted shall be such that movement of the structure, to which the securing is done, does not transmit strain to windows, doors or ventilators as the case may be. The work shall generally

© 2024 MECON Limited
All rights reserved

conform to IS:1081-1960 "Code of Practice for Fixing and Glazing of Metal Doors, Windows & Ventilators". The material for putty shall consist of whiting and linseed oil, raw-mixed in such proportion as to form a paste conforming to IS : 419-2023.

The finished dry surface shall not show any signs of cracking and peeling nor shall it come off readily on the hand when rubbed. Doors, windows, floors and such other parts of the building not to be white washed shall be protected from being splashed upon.

© 2024 MECON Limited
All rights reserved

10.0 PAINTING TO STEEL SURFACE

10.1 GENERAL

All surfaces shall be thoroughly cleaned of all dirt, grease, rust and mill scale. Areas which become inaccessible after assembly shall be painted before assembly after cleaning the surfaces as described above. The surfaces shall be perfectly dry before painting.

Wherever shop primer painting is damaged, the surfaces shall be thoroughly cleaned and touched up with corresponding primer.

Site painting shall not be done in frosty or foggy weather or when humidity is such as to cause condensation on the surface to be painted.

10.2 STEEL STRUCTURES

Unless otherwise specified all structures shall be painted with two coats of primer. One coat shall be applied at shop and the second coat at site. All structures after erection shall be given two coats of finishing paint and shall be of synthetic enamel of approved colour. The under coat shall have different tint to distinguish from the finishing coat.

10.3 GALVANIZED IRON SHEETS

All plain and CGI sheets requires surface pre-treatment or use of other patented primer to ensure adhesion of paint to zinc coated surfaces. Such pre-treatment shall be as per manufacturer's specifications. Where pre-treatment is adopted one coat of primer paint of suitable quality shall be applied. Unless otherwise specified the finishing coats shall consist of an under-coat of an aluminium paint having blue tint and a second coat of aluminium paint having aluminium colour.

© 2024 MECON Limited
All rights reserved

10.4 STRUCTURES EMBEDDED

Exposed surfaces of embedded parts shall be given two coats of red lead graphite primer at shop and finished with two coats of anti-corrosive paint at site after embedment. Type of paint and procedure of painting shall be as per manufacturer's specification. Surfaces to be field welded shall have no paint applied within 100 mm of the welding zone.

11.0 INTERNAL WATER SUPPPLY PLUMBING, DRAINAGE & SANITATION

11.1 SCOPE OF WORK

The work comprises supply, laying testing, commissioning etc. of water supply, plumbing, drainage & sanitation.

The work includes the following activities connected with the job :

i) Supply and delivery of all required pipes and other materials.

ii) Earthwork in excavation for trenches, pits/ chambers/ manholes etc.

iii) Civil works connected with the laying/erection of pipe lines such as making holes in the wall etc. and repairing them after pipe erection, construction of pipe supports, valve chambers, manholes, bedding and covering of pipe laying wherever required.

iv) Laying and jointing of pipe lines as specified in this chapter

v) Testing of pipe lines after laying as per standard tests specified in this chapter.

vi) Back filling of trenches after successful and satisfactory testing.

© 2024 MECON Limited
All rights reserved

vii) Disinfection of the complete piping system in the case of water supply.

viii) Commissioning of entire network.

ix) Safe custody of the pipes/materials/equipment/work and other obligation stated elsewhere in the specification.

x) Any other activities which are not mentioned above but essential and required.

11.2 MATERIALS

The materials shall conform to Part-I of this series.

12.0 WATER SUPPLY & PLUMBING

12.1 GENERAL

12.1.1 GENERAL REQUIREMENTS

The Contractor shall lay all the pipes and fittings in the best workman like manner by skilled workmen and experienced plumbers in conformity with the regulations and requirements of the local appropriate authorities and to the satisfaction of the Engineer. Unless otherwise specified water supply works in buildings shall be carried out in accordance with IS:2065-1983 "Code of Practice for Water Supply in Buildings" & IS:2064-1993 "Code of practice for selection, installation and maintenance of sanitary appliances".

12.1.2 INSTALLATION

All works like earth work, masonry, concrete, steel work, cutting holes, chases in brick, concrete & RCC works, cutting of roads, repairs and rectifications associated directly with the installation of water supply system shall come under the scope of the contractor and shall be governed by the specification of the relevant chapter.

© 2024 MECON Limited
All rights reserved

12.1.3 LAYING

Before lowering down for laying in the trenches, the pipes shall be checked against crack by means of light hammering and for any other damage. All fixing shall be carefully aligned and spaced at a distance from the main structure to give reasonable all round access for maintenance and inspection and laid true to line plumb and level. Any deviation shall need approval of the Engineer. Meticulous care shall be taken to avoid chances of airlock and water hammer.

Pipes shall be laid on continuous unyielding surface holder or on reliable supports at least one near each joint and spacings as directed by the Engineer. The support must be strong, neat and shall have provisions for securing the pipes in every direction and easy maintenance. If situation requires, pipes shall be encased or concealed in masonry or concrete if shown on drawing or directed by the Engineer. Pipes embedded in floors and wall shall be securely bound so as not to allow any movement due to expansion and contraction. adequate width shall be provided to lay the pipes as per standard practice.

Excavation below the required level is not permitted. The contractor shall make good any excess excavation as directed by the Engineer.

Soft spots in the bottom of beds for pipe lines in rock shall be leveled with sand or soft soil or concrete as approved by the Engineer and the thickness of the layer shall not be less than 100mm.

12.1.4 EXCAVATION FOR PIPE LINES IN TRENCHES

Excavation shall comply with chapter 2. The sides of pits and trenches shall be adequately supported at all times, except where otherwise directed by the Engineer.

© 2024 MECON Limited
All rights reserved

12.1.5 UNDERGROUND PIPING IN AND AROUND BUILDING

Underground piping shall be laid at such a depth that it is not likely to be damaged by traffic and other loads and frost, where applicable, and as shown in the drawing

and instructed by the Engineer. The thrust blocks shall be provided wherever required.

The size and depth of the trench shall be as approved by the Engineer. Backfilling in trenches shall be done with selected fine earth, unless otherwise permitted, in 150mm layers and carefully consolidated and well treated so that it does not set as a drainage channel. Special care shall be taken while filling in the vicinity of the pipe to avoid damages. Before backfilling the laid pipe shall be fully tested and approved.

12.1.6 CONCEALED PIPING

Where desired by the Engineer or shown on the drawings the pipes shall be concealed in masonry or concrete of the adjoining structure by making chases in walls/floors and these shall be secured by hooks and the chases filled with concrete 1:2:4 (1 cement, 2 sand and 4 aggregate). The contractor will rectify, if required the chases, openings and pipes, supplement and make good after laying and testing of the concealed pipelines.

12.1.7 GI.PIPING

The pipes shall be fixed in longest lengths possible with all necessary bends, tees, couplings, reducing ockets, short piece, jamnut and tees etc. in perfect straight lines both vertically and horizontally.

12.1.7.1 All exposed GI pipes shall be fixed at least 15mm clear of wall face with holder bat clamps at suitable places not exceeding (2.5 metres) centre to centre. Where the pipes are laid in chases in walls as shown in the drawing,

© 2024 MECON Limited
All rights reserved

these shall be secured to walls by hooks. Chases in walls and floors shall be filled in with cement concrete 1:2:4. Where the pipes are to be run underground these may be laid at least 60 cm below ground level.

12.1.7.2 The joints of pipes and fittings shall be sealed with red lead paint and fine spun yarn. Joints must be perfectly water tight when put under maximum test pressure.

12.1.7.3 Unless otherwise specified the exposed portion of pipes and fittings shall be given two coats of approved synthetic enamel paint over a coat of approved priming. Pipes laid underground or concealed in walls/floors shall be treated with two coats of bituminous paint.

12.1.8 JOINTING OF PIPES

The interior of all pipes and joints shall be cleaned before jointing commences. Jointing of pipes shall be done in such a manner as to render them completely leak proof and durable. Instruction of the manufacturer shall be followed unless desired otherwise by the Engineer. However, the general norms and recommended practices for different types of pipes are given below for guidance :

(a) CAST IRON

i) Spigot and socket joints :

Interior surface of bells and exterior surface of smooth ends of pipes shall be cleared of redundant insulating cover and other foreign materials particularly of oil, burning off materials from bells and smooth pipe ends. Sharp rises on interior bell surface shall be smoothed out.

Bells should be lined up, in compliance with direction of pipe. Laying work shall be started from lower points.

© 2024 MECON Limited
All rights reserved

ii) Lead and Flanged Joint :

ead joints shall be made as per Sl. 15.4.6.1 and flanged joints as per Sl. 15.4.6.2 of chapter 15.

b) STEEL PIPES

Plain ended steel pipes may be jointed by welding. Screwed and socketed joints shall be carefully tightened. Care shall be taken to remove burring from the ends of the pipes. Jointing compound, if used, shall be lead free and approved by the Engineer.

c) G.I PIPES

Threads shall be cut with, sharp tools, and before jointing all scale shall be removed from pipes by suitable means. The screw threads of the pipe shall be cleaned out and the joint made by screwing the fitting after treating the threads with approved pipe jointing compound. Once a joint has been screwed up it shall not be backed off unless threads are recleaned and new compound applied.

d) ASBESTOS CEMENT PIPES

Socket and spigot ended pipes shall be jointed by caulking with tarred gaskets and grouted with 1:3 cement sand mortar.

12.1.9 PRECAUTIONS

a) All water supply pipes shall be so laid and so fixed and maintained as to be and remain completely water tight.

b) During installation open ends of each pipe shall be protected by suitable covers or plugs so that the ends, thread, sockets or spigot are not damaged and no foreign materials can make its way into the pipe line.

© 2024 MECON Limited
All rights reserved

c) Due care should be taken to ensure that there shall be no cross connection whatsoever between a pipe or fitting for conveying or containing wholesome water and a pipe or fitting containing impure water or water liable to contamination or of an uncertain quality of water which has been used for any other purposes.

d) Fittings and fixtures liable to be stolen shall be fitted and fixed just before testing and handing over.

12.1.10 PAINTING

When mentioned in the schedule of item underground steel and cast iron pipes shall be treated with 2 coats of anticorrosive bituminous paint on the outside surface after cleaning the surface from soil, dust, moisture, rust, scales soot etc. When painting is to be done for pipes above ground, G.I. pipes shall be given a coat of zinc chromate primer, C.I. & M.S. pipes shall be given one coat of red lead or zinc chromate primer over which at least 2 coats of paint of best quality and manufacture as approved by the Engineer shall be provided or as specified in the schedule of item.

12.1.11 FERRULE AND STOP COCK BOX WITH CHAMBER

Square cast iron surface box 15 cm square and 22.5 cm deep weighing not less than 4.54 Kg with hinged lid shall be provided in masonry chamber. Top of box shall be made flush with the finished level of the chamber. The chamber 25cm x
25cm inside shall be with half brick wall in cement mortar 1:4 over a cement bed concrete of 75mm thick in proportion 1:4:8 with stone chips. The inside wall faces shall be plastered with 12mm thick cement mortar 1:4 finished smooth with a floating coat of neat cement.

The exposed surfaces of cast iron box and cover shall be treated with two coats of bituminous paint.

© 2024 MECON Limited
All rights reserved

12.1.12 INSPECTION, TESTING AND ACCEPTANCE

12.1.12.1 PIPES, FITTINGS AND FIXTURES BEFORE LAYING

All pipes, fittings and appliances shall be inspected, before delivery at the site to see whether they conform to accepted standards. The pipes and fittings shall be

inspected on site before laying and shall be sounded to disclose cracks. Any defective items shall be clearly marked as rejected and forthwith removed from the site.

12.1.12.2 TESTING OF PIPES AFTER LAYING

GENERAL

a) The contractor shall ensure the safety of the pipe work under test and provide all necessary stoppers, testing apparatus etc. that are required for testing.

b) The contractor shall be responsible for any damage done to pipe work and ancillary work while testing and shall replace any pipe or fitting which does not satisfactorily withstand the test.

c) The contractor shall give written notice of the times at which tests are to take place. On completion of each test two copies of the complete records shall be given to the Engineer.

d) The work will not be considered complete until the tests are found satisfactory and a certificate issued by the Engineer.

After laying and jointing, the main shall be slowly and carefully charged with water, so that all air is expelled from the main by providing a 25mm inlet with a stop-cock, allowed to stand full of water for a few days if time permits and then tested under pressure. The test pressure shall be 6Kg/cm2 or double the maximum working pressure,

© 2024 MECON Limited
All rights reserved

whichever is greater The pressure shall be applied by means of a manually operated test pump, or in the case of long mains or a large diameter, by a power driven test pump, provided that pump is not left unattended. In either case due precaution shall be taken to ensure that the required test pressure is not exceeded. Pressure gauges shall be accurate and shall preferably have been re- calibrated before the test. The pump having been stopped, the test pressure shall maintain itself without measurable loss for at least five minutes. The end of the main shall be closed by fitting a water-tight expanding plug and the plug shall be secured by struts to resist the end thrust of the water pressure in the mains.

12.1.12.3 TESTING OF SERVICE PIPES AND FITTINGS

The service pipes shall be slowly and carefully charged with water allowing all air to escape avoiding all shock or water hammer. The service pipe shall then be inspected under working conditions of pressure and flow. When all draw-off taps are closed, the service pipes shall be absolutely watertight. All pipings, fittings and appliance shall be checked for satisfactory support and protection from damage, corrosion and frost.

12.1.13 STORAGE TANK

12.1.13.1 PRESSED STEEL TANK

Pressed steel water storage tanks shall be of nominal size and capacity as mentioned in the Schedule of Item and fabricated with all flanges external / internal or bottom flange internal and side flanges external, as shown on drawings or schedule of items. Inlet, overflow, vent pipes and manholes shall be arranged and provided as shown in drawing or mentioned in the schedule. Unless otherwise specified, the outlet pipe shall be 50mm above the bottom of the tank and there shall be 150mm free board at the top of the tank. The fabricator shall supply 5 prints of fabrication drawing to the Engineer for prior approval showing thickness of plates, method of jointing

© 2024 MECON Limited
All rights reserved

the plates. All supports, stays, gussets etc. Pads, cleats etc., required for supporting the tanks shall also be supplied by the manufacturer.

All tanks shall be supplied with mosquito-proof top with manhole not less than 450mm diameter. Tanks deeper than 1.00 Metre shall be provided with M.S. internal access ladder adjacent to the manhole. Meter level indicator shall be provided if asked for. Two coats of anticorrosive paint over a suitable primer shall be applied to both internal a external surface of tanks. The paint shall be so selected as not to impart any taste or odour of water and be of lead free composition.

12.1.13.2 G.I. WATER TANK

G.I. water tanks shall be procured from a reputed manufacturer. The design shall be good enough to withstand the loads safely. Galvanized iron water storage tank shall be made of minimum 16 gauge galvanized iron sheet. Unless otherwise specified plain sheets shall be fixed at the corner to angle iron frames by means of 6 mm rivets at 40 mm pitch for tanks upto 1000 litres capacity and 8 mm rivets at 35 mm pitch for tanks above 1000 litres capacity. Tanks above 1000 litres shall have 20 mm dia. galvanised iron stays, one fixed to angle framing at topand two in the body of the tank for extra strength. Holes for rivetting shall be drilled and not punched. Lead shall be applied to the joints before rivetting.

Tanks shall have 400 mm dia. holes at the top with hinged covers. The covers shall be made of galvanised iron sheet with angle iron frame. The cover shall be just loose but close fitting to keep out dust and mosquito and will not be airtight. It shall be complete with lockable arrangement.

Tanks unless otherwise specified shall be provided with rising main inlets of 40 mm dia. galvanised iron pipe or as shown on drawing and 40 mm dia. G.I. over- flow pipe and 25 mm washout with plug. If specified the rising main

© 2024 MECON Limited
All rights reserved

shall be connected to the tank with a ball valve near the top which disconnects the supply when tank is full up to the point of overflowing.

The ball valve shall permit the entry of water when the tank is empty and disconnect the supply when the tank is full. It consists of a hollow floating ball made of copper, plastic or hard rubber, 110 mm in diameter attached to an arm which is so pivoted that the end near the pivot close the orifice of the main when the ball is raised to the required height of water in the tank and opens the main as soon as the ball drops with the fall of water level as it is drawn off through the distribution. The ball valve shall be fixed to the tank in such a position that the body of the ball valve submerge when the tank is full upto the water line. The ball valve shall be so adjusted as to limit the level of the water in the tank below the lip of the over-flow pipe, and above the maximum water filled level shall be as per the standard norms for GI water tank.

Water reservoirs made of concrete or masonry shall be governed by the specification in the relevant chapter. It shall have, inlet, outlet, overflow and wash out with plug and a top MS/CI cover as per schedule of items and drawings.

12.2.1 RAINWATER DOWNCOMERS

Rainwater downcomers shall be standard cast iron or asbestos cement pipes. In case where specifically desired, M.S. pipes may also be used. M.S. pipes shall be painted outside with two coats of anticorrosive paint over a coat of primer. Rain water downcomers shall run along and be secured to walls columns, etc. Where desired by the Engineer these may have to be installed in chases cut in the structure. All pipes shall be well secured and supported by adequately strong brackets. The brackets may be wrought iron clamp type, split ring type or perforated strap iron type as approved by the Engineer. For vertical runs each pipe shall hang freely on its brackets fixed just below the socket. Suitable spacer blocks shall

© 2024 MECON Limited
All rights reserved

be provided against the vertical surface to which the pipe is fixed. Roof and floor drains and yard gullies shall be installed, if required, by cutting into the structure and grouted with 1:2:4 cement concrete. All gutters shall be provided with removable gratings. All horizontal pipes shall have a minimum fall of 1 in 100.

12.2.2 GUTTER

The gutters shall be made of G.I. or A.C. Gutters shall be supplied by reputed specialised firms. Each section shall be sufficiently rigid, edges and corners straight and the slopes perfectly uniform. GI gutters shall have the edges strengthened by suitable means. The joints may be made by rivetting, bolting or soldering.

Unless specified otherwise the gutters shall have a minimum fall of 1 in 120. Adequate number of string supports shall be provided so that there is no deflection even when the gutter is full. Each joint must have a support. Unless otherwise specified the supports shall be fabricated of MS brackets. All junctions shall be thoroughly watertight. The joints may be made by rivetting, bolting or soldering. All joints between successive lengths of gutters shall have an overlap of at least 5 cm. The drop in the overlap shall always be in the direction of the fall of the gutter. Ends of gutters shall be closed watertight. Junction with rainwater downcomers shall be made fully watertight and secured.

12.2.3 SOIL AND DRAINAGE PIPES

GRADIEN
TS

If not specified the minimum gradients of soil and drainage pipe line shall be as follows :

100 mm nominal dia : 1 in 35
150 mm nominal dia : 1 in 65
230 mm nominal dia : 1 in 120

© 2024 MECON Limited
All rights reserved

300 mm nominal dia : 1 in 200

Relation with water supply pipe lines

Unless specifically cleared by the Engineer, under no circumstances shall drainage and soil pipes be allowed to come close to water supply pipelines.

12.2.3.1 LAYING

Each separate pipe shall be individually set for lines and levels. Where lengths of sewer or drain pipes are laid in trench, properly painted sight rails shall be fixed across the trench at a height, equal to length of the boning rod to be used, above the required invert level of the drain or sewer at the point where the sight is fixed. More sight rails shall be required at manholes, change of gradient and intermediate positions if the distance for sighting is more than 16 m apart. The excavation shall be boned in at least one in every 2 m. The foot of the boning rod shall be set on a block of wood of the exact thickness of the wall of the pipe. Each pipe shall be separately and accurately boned between sight rails.

12.2.3.2 SUPPORT AND PROTECTION ON PIPELINES

All pipes shall be laid with sockets leading uphill. Preferably the pipe shall rest on solid and even foundations for the full length of the barrel. However, the pipe manufacturer's instruction as approved by the Engineer shall be followed in the matter of support and jointings.
Where pipes are not bedded on concrete, the bed shall be left slightly high and
carefully placed so that the pipe barrels rest on undisturbed ground. If anywhere the excavation has been carried too low packing shall be done in concrete. Where laid on rock or very hard ground which cannot be easily excavated to a smooth surface, the pipes shall be laid on a cradle of sand or gravel as desired by the Engineer. PVC or similar pipes shall be laid directly on stable soil and packed with selected soil.

© 2024 MECON Limited
All rights reserved

The minimum support and protection for glazed stoneware pipes shall be as follows :

a) When cover is less than 1 metre and where pipes are unavoidably exposed above ground surface, the pipes shall be completely encased surrounded with concrete as per IS:4127-2023.

b) Where pipes are laid on soft soil with the maximum water table laying at the invert of the pipes, the sewer shall be bedded on concrete 1:4:8 mm with 20mm down aggregates as per IS:4127-2023.

c) Where the pipes have to be laid on soft soil with the maximum water table rising above the invert of the pipe, but below the top of the barrel, the pipe

sewer shall be haunched with concrete 1:4:8 mm with 20mm down aggregates as per IS:4127-2023.

d) Where maximum water table is likely to rise above the top of the barrel the pipe sewers shall be completely encased/surrounded with 1:4:8 concrete with 20mm down aggregate as per IS:4127-2023.

Vitrified clay pipes shall be laid on a bed of 150mm thick cement concrete (1:3:6) nominal mix by volume.

Cast iron pipes and concrete pipes may be supported on suitable concrete or brick support, where specified. The support shall be unyielding and strong enough. At least one support shall be located close to ends. Spacing of intermediate supports shall be as decided by the Engineer. Pipes shall be secured to the supports by approved means.
Anchoring of pipes where necessary shall be achieved by suitable concrete encasing designed for the expected thrust.

© 2024 MECON Limited
All rights reserved

12.2.3.3 ENTRY INTO STRUCTURES

For entry of the pipes lines into any building or structure suitable conduits under the structure or sleeves shall be used. The conduits and sleeves shall be such as to allow easy repairs and replacement of the pipes. Where openings or chases are required to be made in the structure for entry of pipe lines, locations and sizes shall be marked and checked by the Engineer. After laying of the pipeline, the openings and chases shall be mended.

12.2.3.4 TRAPS AND VENTILATING PIPES

a) Pipes carrying the sewage from water closets and waste water and overflow water from baths, wash basins, sinks shall be trapped immediately beneath such fixtures. Traps shall have minimum water seal of 50mm and shall be ventilated whenever such ventilation is necessary to maintain water seal of the trap. Ventilating pipes shall be carried up vertically from the drain to a height of at least 600mm above the outer covering of the roof top of the building or as shown on drawings. All vertical ventilating, anti-siphonage and similar pipe shall be covered on top with a cowl. The cowl shall be made of C.I. unless desired otherwise by the Engineer.

Connecting to existing sewer lines shall be through a manhole.

b) Sand Cast Iron Spigot and Socket pipe and fittings

All soil waste and vent pipes and fittings used in the work shall be cast iron and shall conform to IS:1729-2023. The pipes shall have spigot and socket ends, with bead on spigot end and shall be with or without ears. The pipes shall be free from cracks and other flaws. The interior. of the pipes and fittings shall be clean and

smooth and painted inside and outside with Dr. Angus Smith's solution or other approved anticorrosive paint.

© 2024 MECON Limited
All rights reserved

Fittings shall include bends, offsets, branches of various types, junctions etc. as required for the work which shall be provided according to drawings and directions of the engineer.

The fittings shall be provided with access doors where so specified or directed by the engineer. The access door fittings shall be of proper design so as not to form cavities in which the filth may accumulate. Doors shall be provided with 3mm thick rubber insertion packing, and when closed and bolted they shall be watertight. The access doors shall have MS studs and bolts or screws or bolts and nuts.

FIXING

The pipes and fittings shall be fixed to wall by means of MS holder bats clamp of approved type and steel bolts or by pipe nails, bobbins etc. as the case may be, keeping the pipe clear from the finished surface of the wall. The holder bat nails shall be fixed to the wall in wooden block. The soil pipe shall be supported at the foot upon a bed of cement concrete of proportion 1:3:6 and firmly attached to the wall.

The pipes shall be laid truly vertically or along the line as shown in the drawing. Connection between main pipe and branch pipe shall be made by using branches and bends with access door for cleaning.

All vertical soil waste, ventilating and anti-siphonage pipes shall be carried up above the roof and provided with suitable C.I. cowl on top.
Pipes outside the building shall be laid underground for which trenches shall be
excavated as required for the work. The trenches shall be back-filled with exca- vated material after the drainage system has been tested and passed.

JOINTING (LEAD CAULKED JOINT)

Unless otherwise specified, the pipes and fittings shall be

© 2024 MECON Limited
All rights reserved

jointed with lead joints as described below :

The annular space between the socket and spigot will be first well packed in with tarred gasket or hemp yarn leaving 25mm from the lip of the socket for the lead. The joint may be leaded by using proper leading rings or if they are not available by wrapping a ring of hemp rope covered with clay round the pipe at the end of the socket, leaving a hole through which lead shall be poured in (for pipes with sockets facing a upwards 15mm high small clay band on socket edge may be used).

The lead shall be rendered thoroughly fluid and each joint filled in one pouring. Before caulking, the projecting lead shall be removed by flat chisels and then the joint caulked round with proper caulking tools and a hammer of 2 to 3 pounds in weight in such manner as to make the joint quite sound. After being well set up the joint is to be left flush neat and even with the socket.

Lead for caulking shall conform to IS: 782-1978.

PAINTING

All the exposed CI pipes and fittings shall be painted to match the colour of the surroundings. The surface of the pipes and fittings to be painted shall be cleaned thoroughly and painted 2 coats with approved paint over and including 1 coat of approved primer. Pipes laid underground shall be painted with 2 coats of anti- corrosive paint.

12.2.3.5 CUTTING OF PIPES

Manufacturer's instructions shall be followed for cutting of pipes where necessary. Suitable and approved tools shall be used for the cutting so as to leave surface clean and square to the axis of the pipe.

12.2.3.6 JOINTING

Jointing of laid pipes shall be so planned as to avoid

© 2024 MECON Limited
All rights reserved

completely any movement or strain to the joints already made. If any joint is suspected to be damaged it shall be opened out and redone.

All joints between pipes, pipes and fittings and man- holes shall be gas tight when above ground and watertight when underground. Method of jointing shall be as per instructions of the manufacturer and as approved by the Engineer. However, in the absence of any instruction available from the manufacturer the methods as detailed hereunder shall be used.

(a) SAND CAST IRON PIPES

Jointing of cast iron pipe shall be done as described in Sl. No. 12.3.4.7(b).

(b) CONCRETE PIPES

i) SPIGOT & SOCKET JOINT

The opening of the joint shall be filled with stiff mixture of cement mortar 1:2 (1 cement : 2 fine sand) which shall be rammed with caulking tool.

ii) COLLAR JOINT

Joint shall be done by slipping the collar over and clear of the end of the pipe. The recess at the end of the pipe shall be filled with jute braiding dipped in hot bitumen. Care shall be taken that no off-set of the jute braiding shall be visible either outside or inside the pipe. The collar shall be then set up over the joint covering equally both the pipes and leaving an even caulking space all round. cement and sand mortar (1:1.5) shall then be well punched or pressed home with a caulking tool.

c) GLAZED STONEWARE PIPES

Tarred gasket or hemp yarn soaked in thick cement slurry shall first be placed round the spigot of each pipe

© 2024 MECON Limited
All rights reserved

and the spigot shall then be placed into the socket of

the pipe previously laid. The pipe shall then be adjusted and fixed in the correct position and the gasket caulked tightly so as not to fill more than 1/4 of the socket. The reminder of the socket shall be filled with a stiff mixture of cement mortar of
1:1 proportion. When the socket is filled, a fillet shall be formed round the joint
with a trowel, forming an angle of 45 degree with the barrel of the pipe. The newly made joints shall be protected, until set, from sun and rain and shall be covered with damp sacking or other suitable materials.

12.2.4 TRENCHES AND OTHER EXCAVATIONS

Excavation shall be carried out according to chapter-2, Earthwork.

Width of the trench at the bottom shall be such as to provide 200 mm clearance on either side of the pipe for facility of laying and jointing.

Excavated material shall be stacked sufficiently away from the edge of the trench. The spoil bank shall not be allowed to endanger the stability of the excavation. Spoil may be carted away and used for filling the trench behind the work. Turf, top soil or other surface material shall be set aside, turf being carefully rolled and stacked for use in reinstatement. All excavations shall be properly timbered, where necessary. Efficient arrangements for dewatering during excavation and keeping it dry till back filling shall be made to the satisfaction of the Engineer. Sumps for dewatering shall be located away from the pipe layout.

Where the excavation proceeds through roads necessary permissions shall be secured by the contractor from the appropriate authorities.

© 2024 MECON Limited
All rights reserved

Special care shall be taken not to damage underground services, cables etc. These when exposed shall be kept adequately supported till the trench is backfilled.

The backfilling shall be done only after the pipeline has been tested and approved by the Engineer. Special care shall be taken for packing with selected material in areas 300 mm around the pipe. At least 300 mm over the pipe shall also be filled with soft earth or sand.

Consolidation shall be done in 150 mm layers. The surface water shall be prevented from getting into the filled up trench. Traffic shall not be inconvenienced by heaping up unduly the backfilling material to compensate future settlement. All settlements shall be made good regularly to minimise inconvenience or traffic where applicable.

12.2.5 INSTALLATION OF FITTINGS & FIXTURES

12.2.5.1 GENERAL

All fittings & fixtures shall be laid out as per drawings and in proper line, level and shall be firmly secured to floors with screws and ditto fix and to walls with wall plugs and screws. Unless otherwise specified only C.P. Brass screws shall be used for fixing sanitary fittings to wall plugs and floors.

12.2.5.2 EUROPEAN PATTERN WC

Water closet shall be fixed with floor by means of 75 mm long, 6.5 mm diameter counter sunk bolts & nuts embedded in floor using rubber or fibre washers so as not to allow any lateral displacement.

12.2.5.3 INDIAN PATTTERN W.C.

The water closet pan shall be sunk into the floor and embedded in a cushion of average 150 mm cement

© 2024 MECON Limited
All rights reserved

concrete 1:4:8 (1 cement, 4 sand and 8 broken brick ballast of 40 mm size). The concrete shall be left about 125 mm below the top level of the pan so as to allow for flooring and its bed concrete. The joint between the pan and trap shall be made with C.M. 1:1 and joint between trap and CI soil and waste pipe to be made with lead. All the joints shall be leak proof. The WC floor shall slope towards the pan. The foot rest shall be set in cement mortar 1:3 (1 cement : 3 sand).

The cast iron cistern, brackets and flush pipe etc. shall be painted with two coats of approved paint, over and including a coat of approved priming.

12.2.5.4 WASH BASIN

Wash basin shall be fixed to C.I./R.S. brackets fixed in cement mortar 1:3 (1 cement :3 sand). The brackets shall be fixed to approved wooden wall plugs with screws. C.P. brass trap and union shall be connected to waste pipe if specified.

12.2.5.5 URINALS

The urinal shall be fixed to the walls with C.P. Brass screws fixed to wooden wall plugs. Urinal partitions shall be fixed to walls by making chases in walls and grouting the same in 1:2:4 cement concrete.

12.2.5.6 MIRROR

Fixed type mirror shall be screwed to wall plugs with CP brass screws and shall have a backing of asbestos or similar material as specification in the item.

Swivel type mirror shall be fixed with C.P. brackets which shall be fixed to wall plugs with CP brass screws

12.2.5.7 SOAP TRAY / TOILET PAPER HOLDER

This shall be of flush mounting design and shall be housed in walls by making chases and grouting the same in cement mortar 1:3 unless otherwise specified. All other

© 2024 MECON Limited
All rights reserved

fittings shall be fixed with screw or as per manufacturer's specification

12.2.5.8 TOWEL RAIL & TOILET GLASS-SHELF UNIT

This shall be fixed with CP Brass screws which shall be fixed to wall plugs.

12.2.5.9 GULLY TRAP

This shall be fixed on 100 mm thick bed and encasement of size 600mm x 600mm x full height of trap shall be provided with cement concrete of proportion 1:4:8

with 40mm stone aggregate. The gully outlet shall be jointed to the branch drain as specified or directed by the Engineer.

12.2.5.10 MASONRY CHAMBER FOR GULLY TRAP

After fixing and testing gully and branch drain, a brick masonry chamber 300mm x 300mm x 450mm deep or as specified (internal dimensions) in cement mortar 1:4 (1 cement and 4 sand) shall be built with half brick thick wall round the gully trap from the top of the concrete. The internal faces of the chamber shall be finished smooth with 15 mm thick cement plaster (1:4) and neat cement finish. Brick wall exposed to outside shall be finished with 12 mm thick cement plaster 1:4. P.C.C. (1:2:4) band 100 mm thick shall be provided over the brick work with suitable grooves for accommodating R.C.C. cover to be supplied as per drawing and made water tight by providing suitable beading in the band.

12.2.5.11 HIGH LEVEL FLUSHING CISTERN - (FIXING FLUSH PIPE & CISTERN)

The W.C. pan shall be connected to the cistern by G.I. 32mm dia or 40mm (O.D)
high density polythene flush pipe with holder clamp
and brass coupling.

© 2024 MECON Limited
All rights reserved

12.2.5.12 LOW LEVEL FLUSHING CISTERN

Unless otherwise specified, it shall be connected to the closet by means of 40mm dia white porcelain enameled flush bend using rubber adaptor joints.

12.2.6 SEPTIC TANK AND EFFLUENT DISPOSAL

12.2.6.1 SEPTIC TANK

Septic tank shall consist of the tank itself with inlet and outlets therefrom complete with all necessary earthwork and backfilling. The details of septic tank shall be as shown on drawing. This item shall also include ventilating pipe of at least 100mm dia whose top shall be provided with a suitable mosquito proof wire mesh and cowl. Generally ventilating pipe shall extend to a height of about 2 metres when the septic tank is at least 15 metres away from the nearest building and to a height of 2 metres above the top of building when it is located closer than 15 metres. Ventilating pipes can be connected to the normal soil ventilating system of the building where allowed.

12.2.6.2 EFFLUENT DISPOSAL

The effluent from the septic tank shall be disposed by allowing it into an open channel or a body of water if the concerned authority approves or into a soak pit for absorption by soil or shall be allowed to be absorbed by soil through open jointed S.W pipes laid in a trench filled with broken bricks.

12.2.6.3 SOAK PIT

Shall be complete as shown on drawing. In absence of a detailed drawing it shall consist of a 900mm dia pit 1000mm in depth below the invert level of the inlet pipe. The pit shall be lined with stone, brick or concrete blocks with dry open joints backed with at least 75 mm of clean coarse aggregate. The lining above the

© 2024 MECON Limited
All rights reserved

inlet level shall be set in cement mortar (1:6). The pit shall be filled with brick bats. Inlet pipe shall be taken down to a depth of 900mm from the top as an anti- mosquito measure.

12.2.6.4 OPEN JOINTED S.W PIPES

Minimum dia of the S.W pipes shall be 200mm nominal. The trench for laying the pipes shall be minimum 600x600mm. The joints of the pipes shall be left un- sealed.

12.2.6.5 COMMISSIONING SEPTIC TANK

After the septic tank has been proved water-tight and the sewage system is checked, the tank shall be filled with water to its outlet level before the sewage is let into the tank. It shall be seeded with well digested sludge obtained from septic tank or sludge digestion tank. In the absence of digested sludge a small quantity of decaying organic matter such as digested cow dung may be introduced.

12.2.7 MANHOLE/INSPECTION CHAMBERS

Necessary excavation as required for the manhole shall be done true to dimensions and levels as shown in the drawing. The manhole chamber shall be built with brick work in C.M. 1:4 with minimum one brick thick on a base of 100mm thick cement concrete 1:4:8 with 40mm down aggregate or as specified. The concrete bed shall extend beyond the external face of brick work on all sides by at least 75mm . The thickness of wall shall be as indicated. The work shall be carefully built in English bond, the jointing faces of each brick being wall buttered with cement mortar before laying so as to ensure a full joint.
The inside of the walls shall be plastered with 15mm thick cement mortar 1:4 and finished with a floating coat of neat cement and outside shall be plastered with 12mm thick C.M. 1:4.

The channels and benching shall be done in cement concrete 1:2:4 with 20mm down stone aggregate and

© 2024 MECON Limited
All rights reserved

finished with 12mm thick cement plaster in C.M. 1:3. The channels shall be semicircular in the bottom half and of diameter equal to the sewer. Above the horizontal diameter the top edge shall be suitably rounded off. The Branch channels shall also be similarly constructed with respect to benching but at their junction with the main channel an appropriate fall suitably rounded off in the direction of flow of the main channel shall be given. The benching at the sides shall be carried up in a slope of 1 in 3.

All angles shall be rounded to 75mm radius with cement mortar 1:4 and shall be rendered smooth. The internal surfaces shall have a hard impervious finish obtained by using a steel trowel.

The manhole chamber shall be covered on top with RCC (1:2:4) slab with necessary reinforcement as per drawings. Unless otherwise specified circular type light duty M.H. cover with single seal weighting 25 kg. will be provided in each RCC cover.

12.2.8 TESTING AND ACCEPTANCE

12.2.8.1 INSPECTION BEFORE INSTALLATION

All pipes, fittings and fixtures shall be inspected, before delivery at the site to see whether they conform to accepted standards. The pipes shall again be inspected on site before laying by sounding to disclose cracks. All defective items shall be clearly marked and forthwith removed from the site.

12.2.8.2 TESTING OF PIPELINES

Comprehensive tests of all pipe lines shall be made by simulating conditions of use. The method of actual test shall be decided by the Engineer. All test data shall be recorded and submitted to the Engineer for review and instruction. The Engineer's discretion regarding tolerance shall be final.

© 2024 MECON Limited
All rights reserved

General guidance for the tests are given below :

12.2.8.3 SMOKE TEST

Soil, waste, vent and all other pipes, when above ground, shall be tested for gas tightness by a smoke test conducted under a pressure of 25mm water gauge and maintained for 15 minutes after all trap seals have been filled with water. The smoke is produced by burning oily waste or tar paper or similar material in the combustion chamber of a smoke machine. Chemical smokes are not satisfactory.

12.2.8.4 WATER TEST

For pipes other than cast iron Glazed ware and concrete pipes shall be subjected to a test pressure of at least 1.5m head of water at the highest point of the section under tests. The tolerance figure of two litres per centimetre of diameter per kilometre may be allowed during a period of 10 (ten) minutes. The test shall be carried out by suitably plugging the low end of the drain and the end of con- nections, if any, and filling the system with water. A knuckle bend shall be temporarily jointed in at the top end and a sufficient length of the vertical pipe jointed to it so as to provide the required test head or the top end may be plugged with a connection to a hose ending in funnel which could be raised or lowered till required head is obtained and fixed suitably for observation.
Subsidence of test water may be due to one or more of the following causes a) Absorption by pipes and joints.

b) Sweating of pipes or joints
c) Leakage at joints or from defective pipes
d) Trapped air

Allowance shall be made for (a) by adding water until absorption has ceased and after which the test proper should commence. Any leakage and the defective part of the work shall be cut and made good.

© 2024 MECON Limited
All rights reserved

12.2.8.5 FOR CAST IRON PIPES

Cast iron sewers and drains shall be tested as for glazedware and concrete pipes. The drain plug shall be suitably strutted to prevent their being forced out of the pipe during the test.

12.2.8.5.1 FOR STRAIGHTNESS

i) By inserting at the high end of the sewer or drain a smooth ball of a diameter 13mm less than the pipe bore. In the absence of obstruction, such as yarn or mortar projecting through the joints, the ball will roll down the invert of the pipe and emerge at the lower end and;

ii) By means of a mirror at one end of the line and lamp at the other. If the pipe line is straight, the full circle of light may be observed. The mirror will also indicate obstruction in the barrel if the pipeline is not straight.

12.2.8.6 TESTING SEPTIC TANK

The septic tank shall be tested for water tightness. It shall be filled up with water and allowed to soak for 24 hours. Then, it shall be topped up and allowed to stand again for 24 hours and loss of level recorded. The fall shall not be more than 15mm.

12.2.8.7 FIXTURES ETC.

All fixtures and fittings shall be connected by watertight joints. No dripping shall be accepted.

© 2024 MECON Limited
All rights reserved

13.0 EXTERNAL SEWERAGE & DRAINAGE

13.1 SCOPE OF WORK

The work comprises supply, laying, testing, commissioning etc., of sewerage & drainage network as specified.

The work includes the following activities connected with the job.

Supply and delivery of all required pipes and other materials including erection.

ii) Earth work in excavation for trenches and pits/ manholes.

iii) Civil works connected with the laying/erection of pipe lines such as making holes in the walls etc., and repairing them after pipe erection, construction of pipe supports, brick / concrete manholes, preparation of concrete bedding and covering for pipe laying wherever required etc.

iv) Laying and jointing of the pipelines as specified in this chapter

v) Testing of the pipelines after laying as per standard tests as specified in this chapter.

vi) Back filling of the trenches after successful and satisfactory completion of tests for the pipeline laid.

vii) Cleaning, painting/coating and wrapping etc of pipes and fittings etc.

viii) Commissioning of entire network laid.

ix) Safe custody of pipes/ material/ equipment/ work and other obligations stated elsewhere in the specification.

x) Any other activities which are not mentioned above

© 2024 MECON Limited
All rights reserved

but essential and required.

xi) If specified, at road crossing the pipe shall be laid in encasing pipes, wrapped & coated M.S pipes shall be used as encasing pipes. The encasing pipe shall project beyond the berm or both sides of the road. The encasing pipe shall be supported on P.C.C saddles if the site condition warrants so.

13.2 MATERIALS

The materials shall conform to part-I of this series. Sewerage net work in Township shall generally be of R.C.C/S.W.G pipes, R.C.C pipes being used normally for pipe sizes of 400mm dia and above. In plant area, at road crossings etc Cast Iron Pipes may be used.

13.3. EXCAVATION OF TRENCHES & PITS

Excavation shall be carried out according to Chapter of Earthwork.

Before starting earth work in excavation, temporary drainage arrangement shall be provided to prevent surface water entering the trenches and pits at the cost of Contractor.

Excavation of trenches and pits for pipelines shall be carried out in shortest possible time so as to avoid sinking of ground and consequent damage to the pipe- lines.

Excavation of trenches for pipelines and surface drains, shall be in exact accordance with the plans and section, alignment, levels and gradients as indicated on the drawings or as directed at site by the Engineer. The final bed must be dressed, levelled or trimmed to proper gradient and rammed with sprinkling of sand and got passed by the Engineer. No excavation shall be made below the specified levels without written permission of the Engineer. Should any exca- vation be taken below the specified level due to carelessness of the Contractor, he will fill in such excavation at his own expense as specified in

© 2024 MECON Limited
All rights reserved

clause 2.12.

13.4 CAST IRON PIPES

I.S 3114-1994 has to be followed in general for Laying and jointing of pipes unless otherwise specified.

13.4.1 BACK FILLING

For the purpose of back filling, the depth of the trench shall be considered as divided into the following three zones from the bottom of the trench to its top.

ZONE-"A" From the bottom of the trenches to the level of the center line of the pipe.

ZONE-"B" From the level of the center line of the pipe to a level 300 mm above the top of the pipe.
ZONE-"C" From a level 300 mm above the top to the top of the trench. Trenches shall not be back filled until the pipe joints have been tested, alignment and gradient passed by the Engineer but back filling shall be done, at least from the bottom of the trench to the level of the center line of the pipe (ZONE "A") leaving 450 mm on either side of the joints uncovered, with earth till testing is completed. These joints should however be kept covered with mats, gunny, straws etc., to avoid damage to joints by temperature effects.

While back filling care should be taken to ensure that no damage should be done to the pipeline. All back fill materials shall be free from cinders, ashes, slag, refuse, rubbish, vegetables or organic material, lumpy or foreign material, boulders, rocks or stones or other materials which in the opinion of the Engineer is unsuitable or deleterious. However, materials containing stones up to 20 cm as the greatest dimension may be used in Zone-"C" unless specified otherwise herein.

Backfilling in Zone-"A" shall be done by hand with sand, fine gravel or other approved material placed in layers of

© 2024 MECON Limited
All rights reserved

80 mm and compacted by tamping. The back filling material shall be deposited in the trench for its full width of each side of the pipe, fitting and appurtenances simultaneously.

Backfilling in Zone-"B" shall be done by hand or approved mechanical methods. Special care being taken to avoid injuring or moving the pipes. The type of back fill materials to be used and the method of placing and consolidating shall be prescribed by the Engineer to suit individual locations.

Back filling in Zone-"C" shall be done by hand or approved mechanical methods. The type of back fill materials and method of filling shall be as prescribed by the Engineer.

Paving and metaling shall be reinstated in as good order as before removal and the Contractor shall do adequate ramming and watering of under layers to guard against subsequent settlement all at his cost.

13.4.2 CUSTODY OF PIPES

The Contractor shall remain responsible for the safe custody of pipes, specials and other materials supplied by him/issued to him either free or on cost recoverable basis till these are laid installed, tested, back filled etc., and handed over to the Engineer.

The Contractor shall verify the conditions of the pipes, specials etc., at the time of receipt from sources and shall be responsible for all damages during handling, transporting, laying, installing, testing etc., and the cost of such damages shall be borne by the Contractor.

13.4.3 ERECTION/LAYING OF PIPELINES

i) Erection of all equipment shall be carried out with highly skilled workers.

ii) The pipelines shall be laid and supported properly and it shall be deemed as a contractual obligation that the lines are not thrown out of alignment or

© 2024 MECON Limited
All rights reserved

lifted off during commissioning and subsequent operation.

13.4.4 PIPELINE ERECTION

All the underground pipelines shall be laid in accordance with IS : 3114-1985.

13.4.5 HANDLING OF PIPES & FITTINGS

UNLOADING OF PIPES & FITTINGS

While unloading, pipes shall not be dropped down from trucks on hard surface. This should be done with the help of a steadying rope and timber skids. Pipes should not be dragged, specially to the spigot end along hard surface.

LOWERING OF PIPES & FITTINGS

Proper implements, tools etc. shall be provided and used by the contractor while lowering pipes & fittings in the trenches and in no case these should be dropped. Pipes over 300mm dia shall be handled with the help of chain pulley blocks with tripod supports.

DETECTION OF CRACKS IN PIPES AND FITTINGS

The pipes and fittings shall be inspected for defects and cracks by ringing with a light hammer preferably while suspended. Smearing the outside with chalk dust helps location of the crack. If doubt persists, pouring a little Kerosene on the inside of the pipe at the suspected spot will confirm it as it will seep through.

CLEANING OF PIPES AND FITTINGS

All foreign materials shall be cleaned from the socket and spigot ends both from inside and outside. Every precaution shall be taken to prevent foreign material

from entering the pipe while it is being laid. When pipe laying is not in progress, the open ends of the pipe shall be closed suitably.

© 2024 MECON Limited
All rights reserved

CUTTING OF PIPE

The cutting of pipe for inserting valves, fittings or closure pieces shall be done in a neat manner without damage to the pipe. Pipe cutting machine may be used for this purpose and in case it is not available, for large diameter pipes electric arc cutting method using a carbon or steel rod may be adopted. The pipes can be cut by using chisels also depending on the circumstances.

Permissible deflection at socket and spigot joints

DIRECTION

On level ground the socket ends should face the upstream. When the line runs uphill the socket ends should face the upgrade.

PERMISSIBLE DEFLECTION

In case it becomes necessary to deflect pipe from a straight either in the vertical or horizontal plane, due to obstructions or where long radius curve is permitted, the following norms shall be adhered to:- Lead joint 2.5 degrees Rubber joints

for nominal	80 to 300mm	5
for nominal	350 to	4 degrees
for nominal	450 to	3 degrees

Anchor and thrust blocks
Suitable concrete thrust blocks shall be installed, wherever the thrust is appreciable, specially at dead ends and bends. In case of unbalanced also this may be required. In case of steep gradients and under influence of temperature change also thrust blocks may be required for rigidly joined pipes.

It is advisable to avoid sharp bends above 45 degrees. In soft ground as far as possible two bends should not be put together and be separated by at least one length of

© 2024 MECON Limited
All rights reserved

straight pipe.

Anchor or thrust blocks shall be generally as per IS : 5330-1984 and thrust resistant design pressure shall be equal to the test pressure.

13.4.6 PIPE JOINTING

The type of jointing will be defined in the detailed working drawing and Schedule of items i.e. whether they should be (i) socket and spigot with molten lead or lead wool joint or (ii) flanged joint.

13.4.6.1 SOCKET & SPIGOT JOINTS

a) MOLTEN LEAD JOINTS

Unless otherwise specified, socket and spigot joints shall be done with molten lead.

The spigot shall be cleaned of the coating, carefully entered in the socket of the adjacent pipe by one or more laps of white hampen spun yarn, sufficient yarn only being driven into the socket to leave the depth of the lead specified. The proper depth of each joint shall be tested before running the lead by passing completely round it a wooden gauge, notched out to the correct depth of lead, the notch being held close up against the face of the socket. The pipes shall be carefully packed underneath so that they shall bear properly throughout their whole length.

The lead shall be carefully skinned of all scale when melted in a cast iron pot or patent melting machine. The joints must be perfectly dug before being run with lead. The pipes shall again be examined for line and level and the space left in the socket shall be filled in generally by pouring in melted lead. This may be done best by using proper loading rings or if these are not available, by wrapping a ring or hemp rope, covered with clay round the pipe at the end of the sockets leaving a hole into which lead

© 2024 MECON Limited
All rights reserved

shall be poured. For large pipes, it is also necessary to leave one or more air vents around lower half of the joints. The lead shall be rendered thoroughly fluid and each joint shall be filled at one pouring. If the pipe is too large for the joint to be filled from one ladle, two or more ladles shall be used. It is to be noted that the lead should be heated to such a temperature as will ensure that it flows completely around the joint. Overheating of lead shall be avoided.

After a section of convenient length has been laid, lead caulking shall be commenced. The lead shall be freed from the loading pipe outside the socket of the other pipe with a flat chisel, and then caulked around 3 separate times, with proper caulking tools of increasing thickness and a hammer 2 to 3 kg in weight in such a manner as to make the joints sound and water tight. After being well and evenly set, the joint is to be left flush neat and even with the socket. The approximate weight of lead and spun yarn for different size of cast iron pipe socket and spigot joints, as per IS : 3114-1994 are given in the Table-I.

© 2024 MECON Limited
All rights reserved

TABLE – I

QUANTITY OF LEAD AND SPUN YARN
FOR DIFFERENT SIZES OF PIPES

Nominal size of pipe mm	Lead / Joint kg
80	1.8
100	2.2
125	2.6
150	3.4
200	5.0
250	6.1
300	7.2
350	8.4
400	9.5
450	14.0
500	15.0
600	19.0
700	22.0
750	25.0
800	31.5
900	35.0
1000	41.0
1100	46.0
1200	50.0
1500	66.5

Note : The quantities of lead given are provisional and a variation of 20% is permissible either way.

b) LEAD WOOL JOINT

In the event of the Engineer specifying or permitting the use of lead wool the joint shall be made as follows :

Hempen spun yarn shall be driven into the socket and thoroughly caulked with suitable caulking tools. Lead wool shall then be introduced and this caulking shall be repeated with each turn of lead wool under which the socket is full within 3 mm and the wool of the lead wool is compressed into dense mass. The joint shall then be finally pressed with finishing tool. The table giving the quantity of lead

© 2024 MECON Limited
All rights reserved

wool and yarn to be used in different sizes of pipes is given in the Table-2

TABLE – 2

Nominal Internal dia in mm	Lead wool weight in kg	n weight in kg
80	1.30	0.17
100	1.70	0.23
150	2.41	0.34
175	2.89	0.37
200	3.37	0.57
225	3.63	0.64
250	4.11	0.74
300	4.82	0.82
350	6.04	1.17
375	6.52	1.25
400	7.00	1.33
450	9.64	1.84
500	10.86	1.99
600	12.79	2.83
750	15.68	3.52
825	17.12	3.88
900	18.80	4.25
1200	28.44	6.01

Note : Higher tolerance may be permitted under special circumstances depending upon site condition for quality of lead wool and spun yarn.

13.4.6.2 FLANGED JOINTS

Flanged joints should be made by painting the facing of the flanged with graphite or red lead freely. Packing should be of rubber insertion sheet or compressed fibre board and of approved thickness. The packing should be of full diameter of the flange with proper pipe hole and bolt holes cut out and even at both the inner and outer edges. All the bolts shall be tightened up evenly on all sides keeping the longitudinal axes of adjoining pipe in exactly the same straight line.

© 2024 MECON Limited
All rights reserved

The interior of the pipe must be checked carefully so as to be free from all dust and other foreign matters as the work proceeds. For this purpose a disc plate or brush sufficiently long to pass two or more joints from the end of the pipe last laid shall be continuously drawn forward as the pipes are laid. The ends of the pipes must be securely protected preferably with wooden plugs during the process of the work. The pipes laid must not be made receptacles either for tools, cloth or any other material during progress of the work.

13.4.7 INSPECTION & TESTING

a) If required all materials shall be inspected by the Engineer before dispatch to site. All the tests shall be carried out in the manufacturer's works and necessary test certificates shall be furnished as proof of such testing. The Contractor shall intimate the Engineer at least two weeks in advance for any such inspection / testing. All facilities for inspection / testing including necessary test certificates shall be provided by the Contractor at his own cost.

b) After completion of erection all pipelines shall be inspected by the representative of the Contractor and the Engineer. Any discrepancy, defect pointed out during this inspection shall be made good by the Contractor to the entire satisfaction of the Engineer without additional cost.

c) All pipes with valve and fittings shall be tested to 1.5 times maximum working pressure. The pressure should remain constant for a period of 8 hours. All arrangements for testing shall be done by the Contractor. Any defect found during testing shall be made good by the Contractor to the entire satisfaction of Engineer and the test shall be repeated till acceptable results are achieved. Any special tools, instrument or equipment required for these tests shall be provided by the Contractor for tests only.

© 2024 MECON Limited
All rights reserved

d) All oils, lubricants and other consumables required during tests and trials of different equipment shall be supplied and arranged by the Contractor at his own cost.

13.4.8 PAINTING

i) All equipment, valves and other exposed steel parts shall be given a coat of red oxide, zinc chromate or red lead and two coats of final approved quality paint according to the colour scheme of the Purchaser.

ii) All the exposed pipes and fittings shall be painted with two coats of paints of approved quality.

13.4.9 COMMISSIONING

After pressure testing the main, it should be flushed with water of sufficient velocity to remove all dirt and foreign materials.

The system shall be commissioned after all necessary tests have been conducted successfully. All lubricants, oils, and other consumables required for commissioning of the system shall be supplied by the Contractor at no extra cost. Commissioning of the equipment to be supplied, if any, by the Owner, shall be carried out by the Contractor under guidance of the representatives of the supplier of these equipment and Engineer. Any adjustment and/or changes/ rectifications that may be found necessary during commissioning of these equipment shall be carried out by the Contractor at his cost.

13.5 STONEWARE GLAZED PIPELINES (S.W.G)

13.5.1 BACK FILLING

Trenches shall not be back filled until the pipe joints have been tested, alignment and gradient passed by the Engineer, but back filling shall be done at least for a depth

© 2024 MECON Limited
All rights reserved

equal to the diameter of the pipe or 300 mm whichever is greater over the pipes leaving 450 mm on either side of the joints uncovered with earth till the testing is completed. These joints should however be kept covered with mats, gunny bags, straws etc., to avoid damage to joints by temperature effects.

While back filling care should be taken to ensure that no damage is done to the pipelines. The first 300 mm of filling material immediately over and around the pipe should be of soft material free from clods and stones etc. The remainder of the filling materials shall be watered and rammed in layers not exceeding 250 mm at a time.

Paving and metalling shall be reinstated in as good order as before laying of the pipelines.

Unless otherwise required by the Engineer, there shall be a minimum cover of 700 mm over the pipes and at road crossing etc., it shall not be less than 900 mm.

13.5.2 LAYING OF PIPES

The laying of the pipelines shall commence only after the levels of the bottom of the trench at various points have been checked by the Engineer. Cracked pipes whether at the socket or in the body shall be rejected. All SW pipes shall be fitted together on the surface of the ground to ensure a proper fit before they are

lowered. The spigots and sockets shall be properly cleaned and brushed, if necessary & then lowered by hand to the bottom of the trench.

The pipes shall be carefully laid to the alignment, levels and gradients shown on the plans and sections, and great care shall be taken to prevent, sand, earth or other matter from entering the pipes during laying. As it is not permitted to rectify errors of grade by packing up underneath with earth, care should be taken in excavating and slight scraping, if necessary, done to bring

© 2024 MECON Limited
All rights reserved

to grade. The pipes between manholes shall be laid truly in straight lines without vertical or horizontal undulations.

Bedding, haunching or encasing of the pipes during laying shall be in accordance with IS : 4127-1983 and shall be done with cement concrete in proportion (1:4:8) to prevent ground water from entering the pipelines.

All inverts shall be laid from site rail fixed at the true levels, with proper boning rod. The sight rails and boning rods shall be provided, fixed and maintained by the Contractor at his own expense.

The pipes shall be laid, sockets facing up the gradient, beginning at the lower end, and with the sockets, resting in the socket rest holes cut in the trench bottom. Each pipe shall be laid singly and no pipe shall be laid until the trench has been excavated to its required depth to a distance of twenty yards in front of the pipes to be laid.

No pipes of any description shall be covered until they have been passed by the
Engineer.

13.5.3 JOINTING OF PIPES

(a) CEMENT JOINT

The stoneware pipes shall be cement jointed normally. In case, if specified so, bituminous joints shall be used. In each joint, spun yarn soaked in neat cement slurry or gasket of tarred yarn shall be passed round the joint and inserted in it by means of suitable jointing tools. More skeins of spun yarn or gasket shall then be added and well rammed home. The yarn shall be moistened to avoid absorbing moisture from cement mortar.

The yarn should be so placed as to centre the spigot of one pipe within the socket of the other and shall prevent the jointing mortar penetrating inside the pipe where it might set and interfere with the flow of sewage.

© 2024 MECON Limited
All rights reserved

Yarn or gasket (cemented or tarred) so rammed shall not occupy more than one- fourth of the depth of socket.

The cement shall be thoroughly mixed with medium sand in the proportion of 1:1 (1 cement : 1 sand) and then just enough water shall be added to make the mix plastic. On no account, the mortar shall be made soft or sloppy. The mix shall then be carefully inserted by hand into the joint.

Special care shall be taken for inserting the mortar into the portion of the joint underneath the pipe. When the cement mortar has been inserted, it shall be punched or caulked into the joint with wooden caulking tools, and more cement mortar shall be added until the space of the joint has been filled completely with tightly caulked cement. No fillet of cement shall be added.

No mortar which is older than 30 minutes shall be permitted for jointing. The cement mortar joints shall be cured at least for seven days before testing.

The inside of each pipe shall be carefully wiped out with a mop or scrapper sufficiently long to pass two joints from the end of the pipe and any projecting cement shall be removed.

All pipes entering the manholes should be set in cement mortar 1:3 and a completely watertight junction effected.

(b) BITUMINOUS JOINTS

If specified so this joint will be used. Asphalt and sand in the ratio of 1:7 shall be boiled together and filled into the socket in a molten state with the aid of special moulds.

© 2024 MECON Limited
All rights reserved

13.5.4 TESTING OF PIPES

Testing of pipes shall be done wholly at contractor's expense inclusive of apparatus, provision of water etc., and/or as per IS : 4127-2023.

After cement has had time to set, the pipes shall be tested in lengths between manholes in the following 'manner'. In the lowest manhole a plug shall be inserted in the pipe. The disc in the pipe and at the upper manhole shall be fitted with a filling pipe with a right angle bend and an air cock. The length of pipe shall then be filled with water by means of the pipe connection on the upper disc. The air cock in the upper disc shall be kept open, while the pipeline is being filled to permit the escape of air.

When the pipes have been filled with water and air excluded, the air cock shall be shut and water shall be poured into a conical "Filler" attached to the testing and filling pipe of the disc in the upper manhole until water remains in the filler. The testing or filling pipe shall then be raised and fastened so that the height of the pipe is six feet, which will be the usual test pressure for stone ware pipe joints.

The test will be for an hour or such longer period as may be set by the Engineer. If the water level does not fall more than 25 mm in the length of 90 metre, the test may be considered satisfactory.

If it is found that certain pipe joints are leaking, the water shall be run off and joints recaulked with cement mortar and the test repeated till it is proved by the Contractor that the joints are leak-proof.

© 2024 MECON Limited
All rights reserved

13.5.5 CONCRETE BEDDING, HAUNCHING & ENCASING

Unless otherwise specified in the Schedule of Quantities, all SW pipes shall be laid in accordance with IS: 4127-1983 As per site condition haunching or/and encasing of pipes with cement concrete may be required as per clause 4.2 & 4.3 of IS 4127-2023. The concreting shall be done with 1:4:8 cement sand concrete.

Where sewers have less than 1.2 m cover at places of heavy traffic, these shall be surrounded with mass concrete if directed by the Engineer.

13.5.6 HANDLING OF PIPES

While unloading, pipes shall not be dropped from the trucks/carts on the ground. Timber skids and steadying rope should be used while unloading or lowering in trenches. To avoid damage specially to spigot end, pipes should not be dragged on the hard surface.

13.6 MANHOLES

All manholes shall be of the size and type as given in the Schedule and shall be provided as per drawing or as directed by the Engineer. All the manholes shall be circular or other shape as shown in drawing. The bed shall be in cement concrete of Mark-10B (or 1:3:6 mix) (Size of coarse aggregate 40 mm and down) of 100 mm thickness or as shown in the drawing and shall be projected out 75 mm from the outside face of the wall all round. or as shown in the drawing. The working part including channeling, benching etc., made of P.C.C. shall be of grade-15C (or 1:2:4 mix). All manholes shall be plastered inside with 1:3 cement plaster 20 mm thick and finished with a floating coat of neat cement unless otherwise specified.

Concrete used for precast RCC cover slabs shall be of grade 20C (or 1:1.5:3 mix)and shall be constructed as per drawing.

© 2024 MECON Limited
All rights reserved

The top level of manholes shall be generally 100 mm above the surrounding ground levels or as directed by the Engineer. Channeling inside the manhole shall be done in smooth bends.

The end of pipe shall be neatly built in and finished in cement mortar 1:3.

Circular medium duty Cast iron water sealed manhole cover and frames, 560 mm dia (clear opening) and nominal weight 128 kg shall be provided for each manhole and shall be in accordance with IS:1726-1991

Manhole covers with double seals (Light duty) with wt. as specified in schedule of item shall be provided within compound near the buildings if specified so. If specified heavy duty cover and frames, either circular or double triangular type, shall be provided. Step irons shall be provided with two coats of bituminous paint and shall be as per drawing.

In cases where branch pipe sewers enter the manhole or main pipe sewer at a level more than 1m, from the main sewer, a drop connection shall be provided. The extra pipe length required for this connection will be paid under item for pipelines. No other extra payment will be allowed.

All exposed surfaces of cast iron frame and cover shall be painted with two coats of bituminous painting

13.7 MARKER PLATES

Marker plate indicating the particular service installed shall be provided along the routes of pipes laid below ground. These shall be of mild steel, with the type of service and direction of flow, painted on it. The markers shall be set firmly in a concrete base and installed at all corners and turning points. Over straight runs markers shall be spaced at 100 m intervals generally.

© 2024 MECON Limited
All rights reserved

14.0 ROAD WORK

14.1 GENERAL

Road works in general shall be constructed according to the requirements to the various specifications and codes of practices of the Indian Roads Congress.

Works such as earthwork, masonry, concreting and the like, wherever they occur in association with construction of roads, shall be governed by the respective specifications of these series.

14.2 TRENCHING AND PREPARATION OF SUBGRADE

The surface of the formation of width equal to that of soling coat shall first be cut to a depth below the proposed finished level equal to the combined depth of soling and wearing coat, (due allowance being made for consolidation), and dressed parallel to the finished profile. Any roots of bushes, trees etc., shall be taken out to the full depth and the cavities thus formed shall be filled up and rammed by the contractor at his cost.

In slushy soil or in areas where water logging is frequent, adequate arrangement shall be made for drainage of the area so that the sub-soil water level is kept as low as possible.

The sub-grade shall then be consolidated with a power road roller of 8-10 tonne capacity by rolling with minimum of 5 numbers of passes till it is densely consolidated to the satisfaction of the Engineer.

Surplus earth shall be disposed of as directed by the Engineer and the areas where it is disposed of shall be neatly dressed.

All undulations of the sub-grade surface that might develop

© 2024 MECON Limited
All rights reserved

due to rolling shall be made good with earth and sub-grade re-rolled.

14.3 ASH / MOORUM CARPET

Wherever the ground is soft and slushy, ash carpet consisting of common boiler ash shall be laid to 5 cm thickness over the subgrade and then rolled. In firm ground no ash carpet is necessary and boulder soiling shall be laid directly over

the sub-grade. If decided by the Engineer, a bed of moorum of specified thickness shall be provided for to form a sub-grade.

14.4.1 BOULDER SOLING

The width of the soling coat shall be 30cm (15cm on either side) more than that of the wearing coat. Its depth shall be 15cm in cutting and 23cm in filling and made up soil, unless otherwise specified in the schedule of quantities or shown in the drawing.

The edges of the soling shall be marked out by strings and stakes. Soling stone shall be hand packed and set on edge with greatest length across the road. This shall be laid closely in position on the sub-grade, firmly set with their broadest side downwards. The joints shall be staggered. All interstices between the stones shall be wedged in with locking smaller stones well driven into gaps to ensure tight packing and complete filling of interstices. Such filling shall be carried out simultaneously with the placing in position of soling stones and shall not lag behind.

After packing, surface shall be checked with template of approved shape and high and low spots corrected by removing soling and re-packing. The top surface of the soling coat shall be perfectly true to camber and grade.

The soling shall then be thoroughly consolidated with power roller of 8-12 tonne weight depending upon the type

© 2024 MECON Limited
All rights reserved

of soling stones, starting at "edges" and working towards the centre. In case of super-elevated curve the rolling shall commence from the inside edge of the curve to the outside edge. The roller shall run over the same surface of soling at least 10 times or more till the soling coat is well consolidated to the satisfaction of the Engineer. The surface shall be checked by templates and any disturbance in grade or camber corrected after every rolling and finally consolidated. After that, at least 50mm thick moorum shall be laid on top of soling coat and rolled with water to proper compaction so that the top surface seems smooth. The rate for soling coat shall be inclusive of the cost of the moorum as blinding materials for which no separate payment shall be made.

14.4.2 LATERITE SOLING

In case of laterite soling the thickness of soling shall be as follows :

(i) For road width of 7m and above the sub-base shall consist of two layers of laterite stones 150mm maximum size. The sub-base shall be rolled to a thickness of 230mm after compaction.

(ii) For road width of 4m to 7m,the sub-base shall consist of one layer of laterite stone of 150mm maximum size consolidated to 115mm thick.

(iii) A layer of moorum,33.3 % in volume of laterite, shall be spread over the laterite to a uniform thickness and rolled with 8 tonne roller with constant watering until the mixture penetrates into the voids of laterite layer. Care shall be taken to maintain the camber and slopes.

Other steps for laying, compacting etc. of the laterite soling shall be same as given under clause 14.4.1 "Boulder soling".

© 2024 MECON Limited
All rights reserved

14.5 KERBS

Concrete or stone kerbs, where shown in drawings, shall be fixed in position after laying and consolidation of soling. They shall be fixed true to line and level and secured in position by approved means.

14.6 WATER BOUND MACADAM SURFACING

The construction of water bound macadam shall be carried out according to IRC :
19-1981 "Standard Specification and Code of Practice for Water Bound Macadam".

14.7 PREPARATION OF BASE AND SHOULDERS

The subgrade shall be reshaped to the required grade and camber. Where water bound macadam is to be laid over existing black top surface, 50 mm x 50 mm furrows shall be cut in the existing surface at 1 m intervals inclined 45 degree to the centre line of the carriageway, before laying of coarse aggregates. Necessary arrangements shall be made for the lateral confinement of aggregates by constructing shoulders in the form of two parallel mud walls 20 x 15cm which shall be made along the outer edges of the wearing course.

14.8 SPREADING COARSE AGGREGATE

The coarse aggregates shall be spread uniformly and evenly upon the prepared base in required quantities from stock piles along the roadside or directly from vehicles. In no case shall these be dumped in heaps directly on the base. The aggregates shall be spread to proper profile by using templates placed across the road about 6m apart. Where possible, mechanical devices shall be used to spread the aggregates uniformly.

The water bound macadam course shall be constructed in

© 2024 MECON Limited
All rights reserved

layers of not more than
75 mm thickness. However, the Engineer may permit courses of 100 mm compacted thickness to be constructed in a single layer. Each layer shall be tested by depth blocks. No segregation of large or fine particles shall be allowed.

14.9 ROLLING

The coarse aggregates spread as described above shall be compacted to full width by rolling with either three wheel power roller of 6 to 10 tonnes capacity or an equivalent vibratory roller. The weight of roller shall depend on the type of coarse aggregate.

The rolling shall begin from edges and after the edges have been compacted, progress gradually towards the centre, parallel to the centre line of the road, uniformly lapping each preceding rear wheel track by one half width. On super elevated portions, rolling shall commence from the lower edge. Where screenings are to be applied, rolling shall be discontinued when the aggregates are partially compacted with sufficient voids to permit application of screenings. Where

screenings are not to be applied, as in the case of crushable aggregates compaction shall be continued until the aggregates are thoroughly keyed, with no creeping of stones ahead of the roller. Slight sprinkling of water may be done during rolling, if necessary.

Rolling shall not be done when the subgrade is soft or yielding nor when it causes a wave like motion in the base course. If irregularities develop during rolling, and exceed 12 mm when tested with a 3m straight edge, the surface shall be loosened and aggregates added or removed before rolling again. The surface shall be checked by template for camber. In no case shall screenings be used to make up depressions.

© 2024 MECON Limited
All rights reserved

14.10 APPLICATION OF SCREENINGS

After coarse aggregates have been rolled, screenings to fill the interstices shall be applied gradually over the surface in thin layers. Dry rolling shall be done when the screenings are being spread, so that the jarring effect of roller causes them to settle into the voids of the coarse aggregates. Damp and wet screenings shall not be used and the spreading, rolling and brooming of screenings shall be taken up on sections which can be completed within one day's operation.

14.11 SPRINKLING AND GROUTING

After application of screenings, the surface shall be copiously sprinkled with water, swept and rolled. The sprinkling, sweeping and rolling operations shall be continued and additional screenings applied where necessary until the coarse aggregates are well blended and firmly set and a grout of screenings and water forms ahead of the wheels of the roller.

14.12 APPLICATION OF BINDING MATERIAL

After the application of screenings, approved binding material, where it is required to be used, shall be applied at a uniform and slow rate in two or more successive thin layers to a thickness of 2.5 cm. After each application of binding material, the surface shall be copiously sprinkled with water and the resulting slurry swept in with brooms, so as to fill the voids properly. This shall be followed by rolling with a 6-10 tonne roller, during which, water shall be applied to the wheels to wash down the binding material that may get stuck to them. The spreading of binding material, sprinkling of water, sweeping with brooms and rolling shall continue until the slurry of binding material and water forms a wave ahead of the wheels of moving roller.

© 2024 MECON Limited
All rights reserved

14.13 SETTING AND DRYING

After final compaction the road shall be allowed to cure overnight. Next morning, hungry spots shall be filled with screenings or binding material, lightly sprinkled with water and rolled. No traffic shall be allowed till the macadam sets.

14.14 SURFACE EVENNESS

The surface evenness of completed water bound macadam course in longitudinal direction shall be within 12 mm when tested with a 3 m straight edge and in cross profile within 8 mm when checked with a template.

14.15 BITUMINOUS PAVEMENTS

14.15.1 BITUMEN PREMIX CARPET WITH SEAL COAT

The consolidated thickness of this type of treatment shall be 2cm/2.5cm/4cm or as specified.

14.15.1.1 SURFACE PREPARATION

Water bound macadam surface on which black topping is to be provided shall be thoroughly cleaned of dust, loose materials, caked mud and other foreign material with the help of wire brush, chisel, picks etc. Cleaning shall be such as to expose the stone metal to a depth of about 6mm without dislodging the interlock of the metal. All dust and other materials thus removed shall be thrown away at a suitable place as directed by the Engineer.

Any potholes, depressions and undulations found after cleaning shall be made good with premixed chippings, and well rammed.

© 2024 MECON Limited
All rights reserved

14.15.1.2 TACK COAT

Just before the application of tack coat, the surface shall be thoroughly cleaned by brooms and then by fanning with gunny bags.
Bitumen of specified grade heated to a temperature of 177 to 188 degree 'C' shall be spread on the prepared surface uniformly at the rate of 0.75 kg/sq.m. by means of sprayers. It shall be applied just ahead of and keeping pace with, laying of premix carpet.

14.15.1.3 PREPARATION OF MIX, LAYING & CONSOLIDATION

The stone grit (aggregate) shall be surface dry and contain not more than 2% moisture before use. It shall be first screened of dust and measured in boxes and then loaded into the drum mixer according to the capacity of the mixing drum in the proportion given in the table below. The aggregate shall be heated to facilitate mixing with the binder in cold weather, where so directed by the Engineer.

The binder heated in boilers, to a temperature of 149 to 177 degrees C or as specified for the grade used and maintained to that temperature, shall be drawn off from the boiler into a suitable container or in bucket gauged to show the weight of bitumen in it. This shall then be poured over the aggregate in the mixer at the correct rate of 64 Kg/cum of aggregate or as specified and mixing started and continued till aggregate is uniformly coated with bitumen.

Immediately after applying the tack coat, the hot mix shall be discharged from the mixer, carried to the road surface and spread to a thickness sufficient to achieve after consolidation the specified thickness. Rakes or drag spreaders shall be used for spreading the mixture.
When the premix has been laid for a length of 15-20 metres it shall be rolled. Rolling shall commence from edges and proceed towards the centre. The roller wheels shall be moistened continuously so as to prevent metal chips sticking to it.

© 2024 MECON Limited
All rights reserved

Any high spot or depression which become apparent shall be corrected by addition or removal of premix materials.

Further the prepared finished surface shall be protected from the traffic for 24 hrs or such period as may be specified by the Engineer.

14.15.1.4 MATERIALS

Quantity of materials required per 100 sqm of road surface shall be as given in the table below, unless otherwise specified.

Quantity of materials required per 100 sqm of road surface shall be as given in the table below, unless otherwise specified.

Consolidated thickness of premix carpet	**Stone chips(cum)**	**Sand (cum)**	**Binder Tackat (kg)**	**Carpet (kg/cum)**	**Seal coat (kg/cum)**

Priming tack coat on a water bound macadam surface on an existing black top surface Carpet

2 cm 2.4 (10 mm nominal size)

2.5 cm 3.0 (10 mm nominal size)

4.0 cm 4.8 (12 mm nominal size)

Seal Coat

Dry area (Premixed sand seal coat)

Wet area (Liquid seal coat with chips

© 2024 MECON Limited
All rights reserved

14.15.2 SEAL COAT

In dry areas where rainfall is under 150cm per year a premix sand seal coat shall be applied immediately after laying the carpet. The binder shall be heated in boilers of suitable design, to the temperature appropriate to the grade of bitumen. The aggregates shall be dry and suitably heated to a temperature directed by Engineer before the same are placed in the mixer of suitable design. Mixing of binder with aggregates to the specified proportions shall be continued till the latter are thoroughly coated with binder. The mix shall be immediately transported from the mixing plant to the point of use and spread uniformly on the bituminous surface to be sealed. As soon as sufficient length has been covered with premix materials, the surface shall be rolled with 6 to 8 tonne power roller. Rolling shall be continued till the premix material completely seals the voids in the bituminous course and a smooth uniform surface is obtained.

In wet areas where rainfall is above 150cm per year a liquid seal coat with chippings (not sand) shall be applied after laying the carpet. The binder shall be heated in boilers of suitable design, to the temperature appropriate to the grade of bitumen and spread on the surface preferably using mechanical sprayers. Immediately following the application of the binder, stone chippings in a perfectly dry condition shall be uniformly spread on the surface. Immediately after the application of the cover material, the entire surface shall be rolled with 8-10 tonne road roller.

14.15.3 SURFACE DRESSING

The surface shall be prepared in the same way as that for premix carpet work as per 14.15.1.1. Depression or pot holes, if any, shall be repaired as indicated.

After the surface has been prepared and is in perfectly dry condition, bitumen heated in the same manner as for premix carpet, shall be sprayed over the surface preferably

© 2024 MECON Limited
All rights reserved

using mechanical sprayers. It shall be ensured that there is even and uniform distribution of bitumen on the surface. Spraying shall be carried out parallel to the centre line of the road.

Immediately following the application of bitumen, stone chippings in a perfectly dry condition, shall be uniformly and evenly spread as specified in the item, over the entire sprayed surface. Spreading may be done preferably by means of mechanical gritter. Finally the entire surface shall be broomed to ensure perfect uniform spreading.

The final surface shall be checked by means of camber board etc. The spread surface shall be rolled with 6 to 8 tonne roller till there is sufficient boundage of chippings with bitumen. The finished surface shall be thrown open to traffic on the following day.

14.15.4 PREMIXED BITUMEN CONCRETE

14.15.4.1 GENERAL

In this type of road carpet a mixture of sand and stone aggregate is used as aggregate producing a dense mixture. Seal coat is not necessary as the sand used

in the mix works up to the surface and forms a seal by itself. The consolidated thickness of this type of treatment shall vary from 4cm to 7.5cm as specified.

14.15.4.2 SURFACE PREPARATION

Same as in para 14.15.1.1 above.

14.15.4.3 TACK COAT

Same as in para 14.15.1.2 above.

© 2024 MECON Limited
All rights reserved

14.15.4.4 PREPARATION OF MIX, LAYING & CONSOLIDATION

Para 14.15.1.3 shall generally apply except that the mixing shall be done in two stages. The stone aggregate of the the correct specified size and in the proportion shown in the table above shall be fed into the mixer to which 2/3rd of the total specified quantity of bitumen heated to the appropriate temperature shall be added. When the stone metal is well coated, the sand in the specified proportion and the balance 1/3rd quantity of total bitumen shall be fed into the mixer. Mixing shall be continued until a homogeneous mix is produced and all particles are uniformly coated with bitumen.

The premix shall be emptied on to wheel barrows or stretchers and carried to the site of work. It shall then be spread uniformly on the road surface with rakes or drag spreaders immediately after applying the tack coat to a thickness sufficient to achieve after consolidation the specified thickness. When the premix has been laid for a length of 15-20m it shall be rolled. Rolling shall commence from edges and proceed towards the centre.

The roller wheels shall be moistened continuously so as to prevent metal chips sticking to it. After preliminary rolling, all honeycombs, any high spot or depression which become apparent shall be corrected by addition or removal of premix materials. Camber and grade shall be checked at every stage to ensure correctness and any defect found shall be rectified.

14.15.4.5 MATERIALS

Quantity of materials required per 100 sq.m of road surface shall be as given in the table below unless otherwise specified.

The nominal size of Coarse Aggregate herein shall mean as defined below: BINDER

© 2024 MECON Limited
All rights reserved

	Thickness of consolidated bitumen concrete surfacing	**Tack coat (kg)**	**Hot Bitumen (cut back)/ Paving Bitumen 80 / 100 grade** **Bitumen concrete**

			Stone aggregate (kg / cum)	**Sand (kg / cum)**
	4 cm, 5 cm, 6 cm & 7.5 cm		**75** 560	**128**

AGGREGATE

	Thickness of compacted bitumen concrete surfacing		**Stone aggregate (cum / 100 sqm)**	**Coarse sand (cum / 100 Sq.m)**
1.	**4 cm**	**3.8**	**(12mm nominal**	**1.90**
2.	**5cm**	**4.8**	**(20mm nominal**	**2.40**
3.	**6cm**	**5.8**	**(60% 40mm nominal size)**	**2.90**
4.	**7.5 cm**	**7.3**	**(60% 50mm nominal size) (40% 40mm**	**3.65**

The nominal size of Coarse Aggregate herein shall mean as defined below:

Sl. No.	**Nominal size of coarse aggregate**	**Designation of IS sieve through which the aggregate shall wholly pass**	**Designation of IS sieve through which the aggregate shall be retained**
i)	4	50 mm	25 mm
ii)	2	40 mm	20 mm
iii)	2	25 mm	12.5 mm
iv)	1	20 mm	10 mm
v)	1	12.5 mm	6.3 mm
vi)	6	10 mm	2.36 mm

© 2024 MECON Limited
All rights reserved

14.15.5 SURFACE EVENNESS

The finished surface of premix carpet and bituminous concrete shall be tested with a straight edge 4.5 m long and any irregularity greater than 6mm shall be corrected.

14.16 BERMS

Shoulders and berms shall be prepared as shown on the drawings. Work on making berms shall not lag more than 100 metres behind the water bound macadam consolidation. Suitable drains shall be cut on the berms so that the water bound macadam surface is kept drained till bituminous macadam is laid.

14.17 KERBS

Kerbs shall be laid and set in place before completing the bituminous or concrete wearing surface as well as the wearing surface of footpath. Setting shall be done in mortar where so specified with Schedule of Items. They shall be laid and set in such a way as to obtain straight lines in the finished work, the top surface matching with the finished surface of footpath.
Where the road edge forms a curve, the kerbs shall follow such curve. Gaps shall be left as shown in drawings or as may be required to provide for drainage.

14.18 BRIDGES AND CULVERTS

Bridges and culverts shall be constructed according to the specifications of Indian Roads Congress. Relevant chapters of earthwork, concrete, masonry etc., of these series shall apply.

© 2024 MECON Limited
All rights reserved

14.19 BOULDER PITCHING

Wherever specified, boulder pitching shall be provided at the inlet and outlet of pipe culverts, or for embankments of bridges. The subgrade shall first be dressed to level or slight slope as indicated. The transverse slope of the pitching shall be made strictly in accordance with the drawings or as directed by the Engineer.

14.20 SCARIFYING & DISMANTLING

Where a new carriage-way abuts or includes an existing carriage-way and the Engineer so directs, the surface of the latter shall be scarified, adjusted and reshaped to conform with the existing and new camber or crossfall. Materials from the existing road shall be used or disposed off as directed by the Engineer.

Where dismantling of the existing road has been specified, the various layers of the road viz., bituminous macadam, water-bound macadam and soling shall be scarified separately. Scarifying can be done either by hand picks, or by means of scarifiers fixed to the roller. When a roller is used for scarifying, crushing of the metal shall be avoided by moving the metal clear of roller wheels after the scarifier has passed over it. The loosened material shall then be combed by means of rakes to bring out most of the larger stone. If necessary, the larger stones thus collected shall be screened to separate fine particles if any.

The remaining metal shall then be removed and screened to recover reusable metal. Different grades of metal shall be stacked separately and measured.

© 2024 MECON Limited
All rights reserved

14.21 DIVERSIONS

Where the construction of the road or culvert or bridge is in progress, the road shall be closed to traffic and a suitable diversion shall be provided for traffic by the Contractor, as directed by the Engineer.

The road shall be closed by the erection of barriers and suitable sign boards at both ends which shall be provided with lights at night. Both during night and during day, one man shall be posted at each barrier to suitably divert the traffic and to keep the light burning during the night.

15.0 WATERPROOFING TO ROOFS & WATERPROOFING PAINTS

15.1 SCOPE

This chapter deals with different types of waterproofing on roof.

15.2 MATERIAL

The materials shall conform to Part-I.

15.3 GENERAL WORKMANSHIP

The waterproofing to roofs being specialised works the Contractor shall get these done by specialised firms/agencies.

15.4 PAINTING WITH HOT BITUMEN

The surface to be painted shall be thoroughly dried and then cleaned, with wire brushes and cotton or gunny cloth, of all loose materials and scales. The surface shall further be cleaned with a piece of cloth lightly soaked in kerosene oil. Bitumen shall be brought to the site in its original container and this shall not be removed from site till the painting job is

© 2024 MECON Limited
All rights reserved

completed. Before applying the main coatings of hot bitumen paints, one coat of bituminous primer shall be applied. The number of coats of hot bitumen shall either two coats or as specified in the Schedule of Items. The bitumen of approved quality (either of grade 80/100 or 30/40) or as specified shall be applied to the surface after heating it to the manufac- turer's specifications. Care shall be taken to see that no blank patches are left and the quality of bitumen to be spread shall be as specified and shall be to the satisfaction of the Engineer.

15.5 PAINTING WITH BITUMEN EMULSION

Before applying, the surface shall be cleaned thoroughly. Generally two coats of Bitumen Emulsion are provided over a coat of emulsion primer. Since the painting is with emulsion, the surface need not be made dry.

15.6 Waterproofing of Roof (For this project all the water proofing work shall be done by using non shrink water proofing materials as per manufacturers specifications of reputed makes like CICO,CICA&FOSRAC etc)

15.6.1 With bitumen felt Prior to laying the insulation, roof gradient shall be checked. If necessary, the roof shall be re-graded by screed to ensure everywhere a run off gradient of not less than 1 in 120. The screed shall consist of one part cement and four parts medium to coarse sand by volume. The screed shall be cured for 7 days. The surface shall then be cleaned of all foreign matter by wire brushing and dusting.

Waterproofing unless specified otherwise in drawings shall be the "heavy treatment type" with primer coat as described in IS : 1346-1991. The method of laying roofing treatment, surface finishing with pea gravels, special mode of treatment for drain outlets,

© 2024 MECON Limited
All rights reserved

projecting pipes, parapet walls, expansion joints, gutters, timber roofs etc., shall conform to IS :1346-1991. The number of layers of felts shall be as specified in thedrawing or Schedule of Items. The bonding bituminous material shall be of grade 30/40 or as specified and the minimum quantity of hot bitumen to be applied, shall be 1.2 kg/m2. Unless specified otherwise, the bituminous felts shall be hessian bases of Type-3 Grade-2. Pea gravel finish may be substituted by a coat of bituminous aluminium paint, where so specified in the Schedule of Items.

The cement mortar used for filling the chases shall be of mix 1:4 and the cement concrete for fillets shall be of the same grade as the roof slab.

Where special surface finish with precast concrete or clay tiles is specified, it shall be in accordance with the relevant chapter of this series.

15.6.2 WITH BITUMEN MASTIC

The work shall be carried out generally in accordance with IS : 4365-1967 "Code of Practice for Application of Bitumen Mastic for Waterproofing of Roofs" or according to the manufacturer's specifications. The work shall be carried out by a firm of specialists in the trade.

The type of underlay or primer, thickness of application, surface finish etc., shall be as shown on drawing or described in the Schedule of Items. Bitumen melting shall be done in a mechanical mixer by gradually heating to about 200 degree 'C'. Coarse aggregate where required shall be added to the hot bitumen and stirred.

Each coat shall be spread evenly and uniformly by means of a float to the required thickness. Timber gauges shall be used to regulate the thickness.

© 2024 MECON Limited
All rights reserved

Particular care shall be taken to tuck the mastic into grooves on vertical surfaces, at joints, around pipes or other projections and at junction of adjoining bays.

15.6.3 Waterproofing of RCC roof with Lime concrete and Pressed clay titles.

Lime concrete shall consist of broken brick aggregates and lime. Proportion of brickbat coba shall be 2.5 parts of brick jelly to one part of lime. The brick jelly shall be hard, well burnt and of size varying from 12mm to 25mm.

The lime concrete is then laid over roof to slope to give specified thickness and in slope of 1 in 80 or as shown on the drawing for proper roof drainage as per roof drainage plan. The lime concrete is then to be beaten in the manner approved by the Engineer for 48 hours or as directed with hand beaters.

If the surface during the process of compaction becomes so uneven that water lodges in pools, the surface shall be pricked up, and fresh concrete spread and consolidated as necessary to obtain an even surface.

The concrete shall then be cured by sprinkling water and allowed to harden for a period of not less than six days before laying the roof finish.

Roof shall be finally finished with one coarse of machine pressed clay titles 20 mm thick laid over a 12mm thick of 1:3 mix cement mortar mixed with 5% crude oil by weight of cement mixed in mortar. The pressed clay tiles shall be immersed in water for two hours before being used. The side joints of the tiles shall be more than 60 mm thick set full in mortar. Before the work dries up completely, the tile joints shall be raked out and pointed with cement mortar 1:3 mixed with crude oil which shall be 5%

© 2024 MECON Limited
All rights reserved

by mass of cement. The joints shall be well rubbed over with thin bar trowel and excess of mortar scrapped off until the surface of the pointing attains a black polish and becomes hard. As the work proceeds, it shall be kept thoroughly wetted until the mortar has set firm and hard. Watering shall be continued for three weeks after construction.

Lime concrete and tiles shall be taken up the parapet walls to a height of 150 mm or as shown in the drawing.

The specification of pressed clay titles shall be as given in IS:2690-2023 (Part-I). The specification of crude oil shall be as per IS:2119-1980.

The areas around drain pipes shall be properly finished with provision of adequate slope.

The contractor shall give guarantee for any/all types of waterproofing for a period of 7 years against bad of faulty material and construction and shall rectify the same at his own cost during the guaranteed period.

15.7 WATERPROOFING FOR BASEMENT

15.7.1 The specification covers the requirements of waterproofing of basements, tunnels, ducts, pits, bunkers, etc.

The material used shall be bitumen felt type-3 of grade-2 conforming to IS : 1322-1993, together with the specified bonding material and primer.

Waterproofing shall be provided on the outside of walls and top of the floors and shall be carried 150 mm above ground level.

The number of layers of bitumen felt to be used for walls and floor unless otherwise shown in the drawing

© 2024 MECON Limited
All rights reserved

shall be :

i) For depths upto five metres below ground : 2 layers.

ii) For depths beyond five metres : 3 layers.

The method of laying the bitumen felts and workmanship shall in general conform to IS : 1609-1991.

Waterproofing work shall be taken in hand only when the sub-soil water level is at its lowest, the site shall be kept dry by adequate arrangements for pumping out water till the work has been completed. For this purpose drains shall be formed along the edges of the excavation but beyond the building line, with suitable collecting sumps. In case of large excavation areas where it is necessary to dewater under the floor, additional land drains shall be formed across the excavation, to adequately drain the area. Adequate arrangements shall be made to prevent the sides of excavation from slipping while the work is in progress.

The base concrete of mud-mat shall be rendered smooth by a 20 mm thick sand-cement plaster (6:1). Any sharp corner over which the waterproofing course is to be laid shall be eased out by means of cement mortar fillets 7.5 cm in radius.

The surface must be dry before the next operation is carried out. Blown bitumen conforming to IS : 702-2022 shall be applied hot over the prepared surface at the rate of 1.5 kg/m2 for the first layer and for every other subsequent layer(s). The laying of felt over the bitumen so applied shall always commence on the floor, and shall be carried to the walls only after treatment of the floor is complete. The minimum overlapping of joints at sides and ends of felts shall be 10 cm. Joints for subsequent layers of felt shall be staggered. All joints shall be completely sealed by blow lamp.

© 2024 MECON Limited
All rights reserved

A protective flooring of either flat bricks in cement mortar 1:3 or 6 cm thick cement concrete type M15B or a coat of cement sand plaster (1:3) 4 cm thick shall be constructed over the waterproofing treatment to prevent damage to the latter during subsequent construction of the structural floor.

The walls shall be treated in a similar way, the bitumen felts joining at the base with the projecting felt laid over the mud-mat. The wall surface shall be made smooth, where necessary with a coat of cement plaster 1:5, the felts shall be laid as for the floor ensuring that the surface to be treated is dry and then a protective brick wall, half-brick nominal thickness shall be built in cement mortar 1:6 over the projecting mud-mat, the space between the wall and felt being grouted with cement slurry. Sufficient care shall be taken to ensure a perfect bond between the waterproofing on the floor and that on the walls.

The treatment on the wall shall be carried 150 mm above the surface of ground and tucked into a grove 6.5 cm. wide and 7.5 cm deep, the chase being filled with cement mortar (1:4).

Where waterproofing is done to the roof of an underground structure, such as a tunnel, it shall be done in a similar way. The structural concrete shall

be rendered smooth, hot bitumen and bitumen felts applied in the same way as for the floor and walls, and over this shall be laid a protective layer of cement concrete grade M10C, 7.5 cm thick.

15.7.2 WITH EPOXY BASED EMULSION

Over the mud-mat a 20 mm plaster is to be provided to make the surface even.

© 2024 MECON Limited
All rights reserved

On the plastered surface of the mud-mat, three coats of epoxy based leakproof emulsion shall be applied with reasonable gap between each coat in order to permit sufficient drying time.

Precaution should be taken that during the process of rod binding if any damages happens it should be immediately rectified by making patch painting on the affected portion only and as such a complete vigilance is to be kept to rectify the defect.

After the rod binding is over the concreting should be done with high polymer based, chloride and sulphide free cement waterproofing additive/admixtures @ 2% by weight of cement all through the floor area and all through the vertically raised walls of four sides which shall remain underground upto a depth of 8 metre and above from ground level.

After the concreting and immediately after de-shuttering cleaning of the concrete surface on the external faces of the walls are to be done and then three coats of epoxy based leakproof emulsion shall be applied with a reasonable gap between the each coat before back filling. If the back filling is with hard material again a protective layer of plaster shall also be applied on the external faces of walls in order to avoid damages on the painted surface.

If the back filling is with soft sandy or alluvial soil there is no necessity for protective layer of plastering as mentioned above.

Epoxy based paint can be applied on the wet surface hence there shall be no stoppage of the normal progress of the project works.

© 2024 MECON Limited
All rights reserved

15.8 SURFACE APPLICATION

Waterproofing done by surface application of bitumen based or epoxy based material shall conform strictly to the recommendations of the manufacturer. The work shall be carried out by a firm of specialists in the trade.

15.9 GUARANTEE

For the waterproofing on the roof as well as for underground basements the Contractor shall give guarantee in writing for the period of 7 to 10 years as specified in the Schedule of Item. For such guarantee the Contractor shall get guarantee from the manufacturer/specialised firms and forward the same to the Engineer. However, the Contractor shall be fully responsible for the serviceability of the waterproofing treatment throughout the guarantee period and any leakage during that guarantee period shall be stopped by the Contractor at no cost to the Owner and without disturbing working facility of the Owner.

15.10 WATER PROOFING COURSE WITH FIBRE GLASS R.P. TISSUE

15.10.1 SCOPE

This section covers the furnishing of all labour, equipment and performing all operations necessary to complete to provide water proofing course of Fibre glass R.P. tissue all in accordance with the drawing and these specifications.

15.10.2 TERMINOLOGY

For the purpose of these specifications the following definitions detailed hereinafter shall apply.

© 2024 MECON Limited
All rights reserved

15.10.3 PREPARATION OF SURFACES

Surface to receive waterproofing shall be dry, free from dirt, loose particles and foreign materials. Projections which might puncture the membrane shall be removed and voids and crevices shall be filled in prior to the start of work.

Adequate covering shall be provided during this work to avoid splashing or staining of the adjacent work and surfaces. Any work or surface splashed or stained shall be thoroughly cleaned to the satisfaction of the Engineer. Joints in the tissue felt in the different layers shall be staggered.

15.10.4 IN BUILT-UP ROOFING

Application

i) Suitable slope shall be provided in the roof as per manufacturers specifications. Heat insulation may also be provided if necessary.

ii) Prime the plastered surface primer at the rate of 0.4 Kg/sqm. This should properly impregnate the surface and should be left till the time it is touch- dry.

iii) Apply first coat of hot bitumen @ 1.8 Kg/sqm.

iv) Embed first layer of fibre glass RP tissue. Overlaps shall be 100mm between the layers in either direction.

v) Apply second coat of hot bitumen @ 1.8 Kg/sqm.

vi) Embed second layer of fibre glass RP tissue after the surface of the first layer has become dry.

© 2024 MECON Limited
All rights reserved

vii) Apply third coat of hot bitumen @ 1.8 Kg/sqm.

viii) Embed third layer of fibre glass RP tissue.

ix) Apply fourth coat of hot bitumen @ 1.8 Kg/sqm.

x) Finish with gravel grit @ 0.006 cum per sqm.
Guarantee

A written guarantee for the water tightness shall be taken for a minimum period of 10 years.

15.10.5 SPECIFICATION

Water proofing medium

i) By impregnation into the fibre glass reinforcement membrane forms a monolithic mass.

ii) Prevents the penetration of water/moisture.

iii) Acts as a top dressing.

Layer

A single thickness of fibre glass tissue impregnated with bituminous compound.

Multiple layer

2 or more layers of fibre glass tissue laid consecutively with overlapping joints and impregnation with bitumen.

Bitumen/primer

A liquid bitumen of low viscosity which penetrates into a prepared surface upon application.

© 2024 MECON Limited
All rights reserved

Half-brick masonry shall be of approved quality 50 class brick work in cement mortar 1:4 (1cement : 4 sand). Plaster should be in cement mortar 1:4 (1cement : 4 sand). Sand should be fine sand conforming to IS 383

Application

Suitable slope may be provided in lean concrete, if necessary. Over this, 12mm thick plaster with cement mortar 1:4 (1cement : 4 coarse sand)is to be laid.

Prime the plastered surface with primer at the rate of 0.4 Kg/sqm. This should properly impregnate the surface & then should be left till the time it is touch dry.

Water proofing shall be as follows :-

i) Apply first coat of hot bitumen @ 2.4 Kg/sqm.

ii) Embed first layer of fibre glass RP tissue. Overlaps shall be 100mm between the layers in either direction.

iii) Apply second coat of hot bitumen @ 2.4 Kg/sqm.

iv) Embed second layer of fibre glass RP tissue after the surface of the first layer has become dry .

v) Apply third coat of hot bitumen @ 2.4 Kg/sqm.

vi) Embed third layer of fibre glass RP tissue after the surface of the second layer has become touch-dry.

vii) Apply fourth coat of hot bitumen @ 2.4 Kg/sqm.

viii) Embed fourth layer of fibre glass RP tissue after the surface of the third layer has become touch-dry.

© 2024 MECON Limited
All rights reserved

ix) Apply fifth coat of hot bitumen @ 2.4 Kg/sqm.

x) A layer of 12mm thick fine sand is to be laid after completing the above operations. The layer of sand will not be applied on vertical walls.

The surface should be finished with half-brick masonry in cement mortar 1:4 (1cement : 4 coarse sand).

Guarantee

A written guarantee for the water tightness shall be taken for a minimum period of 10 years.

General

The work will be carried out by specialists in the trade. Workers shall be provided with gum boots and hand gloves. There shall be no air pockets. Corners shall be treated flush without any air pockets or voids.

Measurement

The unit will include supply of materials, transport, preparation of surface, application of water proofing treatment, plastering, masonry work etc., as specified herein. The measurement of the item will be in square metres nearest to the second decimal of the concrete surface which is to be damp- proofed.

15.11 WATER PROOFING COURSE WITH P.V.C SHEETS/ MEMBRANES

15.11.1 JOINTING

The adjacent lengths of the P.V.C sheets shall be jointed by giving an overlap of 25mm, one over another by sealing with the approved adhesive. A minimum width of the sheet, as specified in the item, shall be used without any joint. Jointing of

© 2024 MECON Limited
All rights reserved

the sheets, to the extent possible and practicable, shall be done at the site workshop.

15.11.2 LAYING

i) Horizontal areas: The base concrete shall be rendered smooth by cement sand plaster 1:6 mix of 20mm thick unless otherwise specified. It shall be ensured that there are no sharped crivices, projections etc which may puncture and damage the sheet. P.V.C sheets shall then be evenly laid over the smooth rendered surface while it is green.

After laying of sheets a protective cover shall be laid over it. This cover may be of 1:6 cement sand mortar bed of thickness 20mm and above, flat brick/tile soling over cement sand mortar bed, any other suitable layer or thermal insulation cover as specified in the item. However care is to be taken that sheets do not get damaged while laying the protective cover. The horizontal layer of P.V.C sheets shall be carried over to a minimum of 150mm height and tucked in to the connecting vertical walls as in the case of roof parapets, if there is no provision of continuous laying of the sheets in the adjacent vertical surface.

ii) Vertical surfaces

On vertical concrete surfaces the P.V.C sheets shall be fixed along with the form work with the knobs projecting toward concrete. The sheets shall be clamped on the top of the form work to keep it in position. Concrete is then poured and knobs are locked in it. After the forms have been stripped off, all the tie bolt holes, cuts and other damages are sealed with additional patches of sheets as per manufacturer's specification.

© 2024 MECON Limited
All rights reserved

In case good quality of soil, completely free from foreign materials like stone piece, hard lumps and rubbish etc, is available, it can be used directly as a back fill. Otherwise a half brick wall or any other measure as specified shall be provided as a protection barrier over the projecting base of the concrete/mud mat. The top edge of the sheet shall be tucked into a chase to be subsequently sealed with cement sand mortar of 1:4 mix.

In case of sheets being laid both on horizontal and adjacent vertical surfaces, the horizontal sheets shall be carried on the vertical portion as one monolithic layer.

15.11.3 AGENCY

The execution work including jointing, laying and testing etc. shall be done by a specialised agency duly approved by the Engineer.

15.11.4 TESTING

After laying is complete, the sheets shall be tested by an Electronic Pin hole detector for pin holes, cuts and other damages etc. All such portions shall be patched suitably with additional sheets as directed and again test checked.

15.11.5 EXPANSION JOINTS

All Expansion Joints etc of dimensions as specified, shall be filled up by Polymer Sealant of pourable grade as per manufacturer's specification on the P.V.C sheets locked in the joint.

15.11.6 GUARANTEE

The contractor shall guarantee the water tightness and leak proofing of the structure for a period of ten years

© 2024 MECON Limited
All rights reserved

after certified completion and handing over of the jobs by furnishing a free maintenance guarantee as per prescribed format and as specified.

15.12. Waterproofing with Non-Shrink Polymeric Waterproof Grouting Compound

15.12.1 WORK INCLUDED

The Contractor shall furnish materials, labour, plant, equipment and tools to complete the work as specified and/or as shown in drawings.

15.12.2 MATERIALS

Cement

Ordinary portland cement shall conform to IS : 269-2015 and portland blast furnace cement shall conform to IS : 455-2015.

Aggregates

All aggregates shall conform to IS : 383-2016 Fine aggregates shall be approved river or pit sand.

Cement waterproofing compound

All cement waterproofing compound shall conform to IS : 2645-2003 and shall be of approved quality.

Solvent less resin

High build polymeric surfacing which forms a thick resilient and flexible membrane on concrete with high resistance to oil and water.

Nozzle

15 mm dia threaded G.I. pipes of suitable length. Super plasticiser High range water reducing admixture and integral cement water proofer for concrete. Super plasticiser shall conform to ASTM C-194 Type F, IS: 9103-1979 & IS:2645 2003.

© 2024 MECON Limited
All rights reserved

15.12.3 WATERPROOFING OF UNDERGROUND STRUCTURES

Waterproofing shall be carried out as per the approved manufacturer's specification and as stated below:

15.12.3.1 RAFT

The sub-base (PCC) of the underground structure shall be cleaned of all dirts and kept dry by continuous pumping of water. 20 mm thick plaster with cement-sand mortar (1:3) mixed with approved cement waterproofing compound as per manufacturer's specification shall be laid on top of the sub-base. The plaster shall be finished smooth with a steel trowel.

The plastered surface shall then be painted with two (2) coats of approved solvent less resin to form a thick resilient and flexible resinous membrane over the plastered surface.

Threaded nozzles of 15 mm dia and of suitable length shall be placed and fixed in a grid pattern of maximum 1.5 m centre to centre over the whole raft, prior to casting of RCC raft. similar nozzles will also be placed along the construction joint, if any, at regular intervals not exceeding 1.5 m c/c. Adequate precaution shall be taken to keep the nozzles plugged at both ends to prevent them from getting clogged by concrete. Similar nozzles shall also be post fixed at critical points, if required. Approved super plasticiser-cum-cement waterproofer shall be added to the concrete which shall be at least M20 grade as defined by IS : 456-2000 and the water cement ratio of the concrete shall not exceed 0.45. Adequate precaution shall be taken to keep the nozzles vertical while concreting.

Approved non-shrink polymeric waterproof grouting compound mixed with cement slurry shall be injected through the nozzles under pressure by pump as per

© 2024 MECON Limited
All rights reserved

the instructions of the manufacturer. When the injection operation is over the nozzles shall be sealed with a sealing compound as per manufacturer's specification and instruction.

15.12.3.2 VERTICAL WALL

15 mm dia threaded nozzle of suitable lengths shall be placed and fixed in a grid pattern of maximum 1.5 m centre to centre over the entire surface prior to concreting of the vertical wall. Similar nozzle are to be also fixed at construction joints, if any, y, at regular intervals not exceeding 1.5 m c/c. Adequate precaution shall be taken to keep the nozzles plugged at both the ends to avoid clogging of the nozzles by concrete. Similar nozzles shall also be post fixed at critical points, if required.

The concrete for the vertical wall shall be at least M20 grade as defined by IS:456-2000 having a maximum water cement ratio of 0.45. Approved super plasticiser-cum-cement waterproofer shall be added to the concrete as per the manufacturer's specification. Adequate precaution shall be taken to keep the nozzles horizontal during concreting. The exterior surface of the concrete shall be plastered with 12 mm thick cement sand mortar (1:3) mixed with approved cement waterproofing compound conforming to manufacturer's specification. The plastered surface shall then be finished smooth with a neat coat of cement slurry and painted with two coats of approved solventless resin to form a thick resilient and flexible resinous membrane over the plastered surface. Approved non-shrink polymeric waterproof grouting compound mixed with cement slurry shall be injected through the nozzles under pressure by pump as per the manufacturer's specification and shall be sealed with a sealing compound as per manufacturer's specification and instruction.

© 2024 MECON Limited
All rights reserved

16.0 MISCELLANEOUS

16.1 FALSE CEILING

16.1.1 SCOPE

This chapter deals with the specification for various types of false ceiling as listed below :

a) Wooden ceiling (solid wood) and decorative ply.

b) Ceiling with insulating Building Board/Particle Boards etc.,

c) A.C. Sheet and ply wood ceiling.

d) Plaster of Paris (Gypsum Anhydrous) ceiling over wooden frame.

e) Plaster of paris (Gypsum Anhydrous) Tiles ceiling.

f) Wooden cover, fillets, beading for ceiling.

16.1.2 GENERAL

16.1.2.1 MATERIALS

All materials shall be in accordance with the general specifications of materials, Part-I, Schedule of items and as shown in drawings.

Special finishing materials as specified in schedule of item shall be procured from the specified source and got fixed by employing skilled worker in the trade under direct supervision of the manufacturer.

16.1.3 OPENINGS FOR INSTALLATION OF LIGHT FITTINGS

Openings in the ceiling for installation of A/C grills, light fittings shall be provided as per drawings.

© 2024 MECON Limited
All rights reserved

16.1.4 RECESS FOR PELMET

Recess for the installation of pelmets shall be provided where shown in drawings along the windows/ doors.

16.1.5 GRILLS

Grills made of wooden, M.S., Aluminium, PVC or any other material as necessary shall be provided as indicated in the drawing.

16.1.6 FRAME WORK

The type of frame to receive the ceiling material may be of wood, aluminium or M.S. as specified in the schedule of item and as mentioned in the drawing.

16.1.7 WOODEN FRAMING FOR FALSE CEILING

Unless otherwise specified in schedule of items the wooden frame work shall be of following description :

The frame work for false ceiling shall be of approved quality teak wood scantlings, the runners shall be 75 x 50 mm size and shall be spaced at 1200 mm c/c and the battens shall be 50 x 50 mm size spaced at 600 mm c/c (approx) forming a grid of 600 x 600 mm or any other grid suitable for fixing the false ceiling material and its size. The runner and battens shall be joined by halving joint using counter sunk 6 mm bolt with washer of required length with soffit of runner and batten in perfect level. The heading joints between runners shall be made with lap joints using 2 nos. 6 mm dia counter sunk bolts with washer. Heading lap joints between battens shall be made with suitable size screws. The wall ends of the runner shall be embedded in the wall (50 mm deep) and shall be grouted with 1:2:4 cement concrete. The soffit of framework shall be made

© 2024 MECON Limited
All rights reserved

perfectly horizontal. The teak wood frames shall be treated with 2 coats of wood preservations treatment before fixing the tiles/boards as the case may be.

The main runners of frames shall be suspended by M.S. flat 40 x 3 mm /12mm dia M.S. round/T.S. hangers placed at 1200 mm c/c (approx), the top end of the hangers shall be hocked to R.C.C. reinforcement of slab or fixed to M.S. flat cleats installed in slab for the purpose or hooked to purlins of the trusses. The hangers may be twisted or ends of M.S. round/T.S. hanger flattened to allow for fixing the same with T.W. frame or M.S. cleats with bolts of suitable size.

For teak wood framings of shaped ceilings the spacings of frames and hangers levels of false ceiling etc., shall be required to obtain the shapes/drops and profile of the ceiling and to the requirement of ceiling material. The frames shall be locally adjusted to create openings of required sizes for installation of light fittings, grills of air conditioning system.

16.1.8 METAL FRAMING

16.1.8.1 GALVANISED PRESSED STEEL FRAMING SYSTEM

Galvanised pressed steel framing system for false ceiling shall be procured from reputed manufacturer and installed by specialist agencies under technical guidance of the manufacturer and strictly as per their specifications. Unless specified otherwise these shall consist of G.I. rectangular pipes at 900 mm c/c suspended by M.S. hanger fixed to R.C.C. slab with M.S. cleats and cross channels fixed to rectangular pipes at 450 mm c/c as per "Galvolock" system of M/s Eastern Interior Pvt Limited or equivalent. Ceiling materials shall be fixed to cross channels as per specifications of the manufacturer.

© 2024 MECON Limited
All rights reserved

Framing shall be adjusted to provide openings for the light fittings and air- conditioning grills but these shall be supported independently and not on the framing.

16.1.8.2 ALUMINIUM GRID CEILING FRAMING SYSTEM

Framing for Aluminium grid false ceiling system shall be of reputed manufacturer Bestlok, Eezilock or equivalent. It shall consist of aluminium main tee and cross tee's suspended by adjustable hangers fixed to R.C.C. floor with cleats. The grid may be 600 x 600 mm, 1200 x 600 mm or as per drawings. Ceiling materials, shall be fixed to frames strictly as per manufacturers specification.

16.1.9 FIXING OF CEILING

16.1.9.1 WOODEN CEILING WITH PLANKS

These shall be of class of wood and thickness as specified in Schedule of items. Unless specified otherwise the width of the ceiling board shall be 100 mm to 150 mm and shall be planed true on the exposed surface. The maximum length of the finished board shall be 1800 mm. The boards/strips shall be joined with tongue and grove joints and heading joints in adjacent board of the same strip shall be square butt type neatly finished. These joints shall be staggered in alternate strip or line. The boards shall be fixed to T.W. battens by headless brass pins. Moulding beads at junctions with walls and other locations as per drawings shall be provided. Necessary opening for installation of light fittings and A/C grill shall be provided and junctions if required shall be finished with moulded beads.

The false ceiling shall finally be checked for line and level, sand papered and polished with colourless polish to achieve matt satin natural finish.

© 2024 MECON Limited
All rights reserved

16.1.9.2 DECORATIVE PLY CEILING

These shall be with decorative selected group matched ply of Teak Ply, white cedar ply or any other approved class of veneer ply in strips, square or rectangular panel matching the ply of wall panelling, if any, in the same room and of thickness as per schedule of item and drawings. The strip ply, square/rectangular panels shall be fixed to T.W. framework with panel pins. Moulded beads of same wood as that of ply of matching shade shall be provided at junctions with walls and as specified in drawings.

Where specific pattern of grains and shade is required the ply cut into shapes as per design may be pasted on a backing ply with adhesive and such made panels shall be fixed to framing.

The ceiling shall be checked for line, and levels and exposed surfaces shall be sand papered and finally polished with colourless polish to achieve matt satin natural finish.

16.1.9.3 CEILING WITH INSULATION BOARD/PARTICLE BOARDS

Insulation boards shall be of approved manufacturer, shade, design and thickness as specified in schedule of items and drawings. These may be plain, textured, perforated with natural finish or with white finished surface.

The boards shall be cut to suit the panel sizes of ceiling with special tools and by skilled workmen strictly as per manufacturers specifications. The board shall be fixed to T.W. frames with brass screws or as per manufacturers recommendation and in case of metal frames as per recommendations of the manufacturer of the ceiling system. The joints where exposed shall be of uniform thickness (3 mm to 6

© 2024 MECON Limited
All rights reserved

mm) and pattern as shown in drawings.

The ceiling shall be checked for line and level and exposed surfaces prepared appropriately to receive the paint as specified in schedule of item and drawing.

16.2 WOODEN PARTITIONS

16.2.1 SCOPE

All materials for the wooden partitions shall be of respective class as specified in the part (I) and as mentioned in schedule of items.

16.2.2 FRAME WORK

Unless otherwise specified in the schedule of items, framing for partitions shall be made of approved quality teak wood scantlings of sizes as mentioned in schedule of items and drawing. The spacing of frames shall not exceed 1200 mm c/c in both direction. The joints of the frame shall be made as per standard joinery practice using standard adhesive as described in wood work chapter. The faces of the frames to receive ply/wooden board shall be true to line, level and plumb. The frames shall be firmly secured to walls, ceilings, floors by making chases and grouting the frames in 1:2:4 cement concrete or fixing the frames with metal clamps/flats screwed to above elements. The frame shall be treated with 2 coats of wood preservative. Where the panelling material is of decorative ply of 3.5 mm to 4 mm thickness, commercial ply of 6 mm thickness shall be fixed to the frame work for backing purpose. Where sunk (coffered) panels are to be made, combination of single and double layers ply shall be used for backing to achieve level difference for sunk panels.

© 2024 MECON Limited
All rights reserved

16.2.3 BOARDING/FACING FOR PARTITION

a) Wooden plank/board These shall be of class of wood and thickness as specified in the schedule of item and drawings. These shall be fixed to backing wooden frame work with counter sunk brass screws in pattern and designs, with groves, joints, beads, fillets, cover moulds as shown in drawings. The exposed surfaces shall be sand papered and polished as specified.

b) Decorative ply wood facing

These shall be with decorative teak wood/rose ply/white cedar 3.5 to 4 mm thickness of selected pieces with matching colour, texture and grains and shall be fixed to the backing ply with panel pins in pattern, design, with uniform width of joints, beads, fillets, cover mould as shown in drawings. The exposed surfaces shall be lightly sand papered finished with colourless polish to achieve matt satin finish.

c) Jolly pan (laminated) board

Where specified Jolly pan boards shall be fixed to teak wood frame work strictly as per manufacturer's specification. The boards after fixing shall be cleaned of all adhesives etc.

d) Formica facing

Formica facing shall be fixed to the backing ply with standard adhesive as described for panelling works.

© 2024 MECON Limited
All rights reserved

16.3 EXPANSION AND ISOLATION JOINTS

16.3.1 GENERAL

Expansion and isolation joints in concrete structures shall be provided at specific places as per details indicated on the drawings. The materials and types of joints shall be as specified hereinafter. In case of liquid retaining structures, additional precautions shall be taken to prevent leakage of liquids as may be specified on the drawings or as directed by the Engineer. All materials are to be procured from reliable manufacturers and must have the approval of the Engineer. Where it is the responsibility of the Contractor to supply the material, the Engineer may demand test certificates for the materials and/or instruct the Contractor to get them tested in an approved-laboratory free of cost to the Owner. Joints shall be formed true to line, level, shape, dimension and quality as per drawings and specifications. Prior approval, for the method of forming the joints, should be obtained from the Engineer before starting the work.

16.3.2 BITUMEN IMPREGNATED BOARD

Bitumen impregnated fibre board of approved manufacturer as per IS:1838 (Part 1)-1983 may be used as fillers for expansion joints. It must be durable and waterproof. It shall be compressible and possess a high degree of rebound. The dimensions of the board should be equal to that of the joint being formed. At the exposed end, the joint shall be sealed with approved sealing compound to a depth of at least 25 mm after application of an approved primer. The sealing compound and the primer shall be applied as specified by the manufacturer.

© 2024 MECON Limited
All rights reserved

16.3.3 JOINT SEALING STRIPS

16.3.3.1 GENERAL

Joint sealing strips may be provided at the construction, expansion and isolation joints as a continuous diaphragm to contain the filler material and/or to exclude passage of water. The sealing strips will be either metallic like G.I., Aluminium or Copper, or Non-metallic like rubber or P.V.C.

Sealing strips will not have any longitudinal joint and will be procured and installed in largest practicable lengths having a minimum number of transverse joints. The jointing procedure shall be as per the manufacturer's recommendations, revised if necessary, by the Engineer. If desired by the Engineer, joints in rubber seals may have to be vulcanised.

16.3.3.2 METAL SEALING STRIPS

Metal sealing strips shall be either G.I.or Aluminium or Copper and formed straight, U-shaped, Z-shaped or any other shape and of thickness as indicated in the drawing and schedule of items and/or as instructed by the Engineer.

The transverse joints will be gas welded using brass rods and approved flux. In case it is found that the joints cannot be made leak proof, longer lap lengths and different method of brazing which will render it leak

proof, will be adopted by the Contractor without any additional cost to the Owner. The edges shall be neatly crimped and bent to ensure proper bond with the concrete.

© 2024 MECON Limited
All rights reserved

a) G.I. Strips

G.I. strips shall be minimum 1.5 mm thick and 150 mm in width unless specified otherwise. The Strips shall be strong, durable, without any rust or crease. At the joints, the overlapping should be for a minimum length of 50mm

b) Aluminium strips

Aluminium strips shall be minimum 18 SWG thick and 300 mm wide unless specified otherwise and shall conform to IS : 737-1986. A minimum lap of 50 mm length is required at the joints.

c) Copper strips

The copper strips shall be minimum 18 SWG in thickness and 300 mm width.

It should be cleaned thoroughly before use so as to expose fresh surface, without any reduction in gauge. A minimum lap of 50 mm in length is required at the joints.

16.3.3.3 NON-METALLIC SEALING STRIPS

These will be normally in Rubber or PVC Rubber or PVC joint seals can be of shape having any combination of the following features :

a) Plain
b) Central bulb
c) Dumb-bell or flattened ends
d) Ribbed and corrugated wings
e) V-shaped

Transverse joints will be allowed only under unavoidable circumstances and with the specific approval of the Engineer. The actual size and shape shall be as shown in drawings/Schedule of Items and or as directed by the Engineer.

© 2024 MECON Limited
All rights reserved

The method of forming these joints, laps etc., shall be as specified by the Manufacturer and/or as approved by the Engineer taking particular care to match the central bulbs and the edges accurately.

a) Rubber sealing strips

The minimum thickness of rubber sealing strips shall be 3 mm and the minimum width 100 mm. The material will be natural rubber and be resistant to corrosion, abrasion and attacks from the acids, alkalies and chemicals normally encountered in service. The physical properties will be generally as follows :

Specific Gravity : 1.1 to 1.15
Shore Hardness : 65A to 75A
Tensile Strength : 25 - 30 N/mm2

Maximum Safe Continuous
Temperature : 75 Degree 'C'

Ultimate Elongation : Not less than 350%

b) P.V.C. sealing strips

The minimum thickness of P.V.C sealing strips will be 3 mm and the minimum width 100 mm. The material should be of good quality Polyvi- nyl Chloride highly resistant to tearing, abrasion and corrosion as well as to chemicals likely to come in contact with during use. The physical properties will generally be as follows :

Specific Gravity : 1.3 to 1.35
Shore Hardness : 60A to 80A
Tensile Strength : 10 - 15 N/mm2
Maximum Safe Continuous Temperature :
70 Degree 'C' Ultimate Elongation :
Not less than 275%

© 2024 MECON Limited
All rights reserved

16.3.4 BITUMEN COMPOUND

When directed, the gap in expansion joints shall be thoroughly cleaned and bitumen compound laid as per manufacturer's specifications. The compound to be used shall be of approved manufacture and shall conform to the requirements of IS: 1834-1984.

16.4 BARBED WIRE FENCING

16.4.1 MATERIALS

16.4.1.1 GALVANISED BARBED WIRE

Barbed wire shall be properly galvanised and shall be obtained from the approved manufacturer as specified in detail in Part-1.

16.4.1.2 OTHER MATERIALS

The specifications of materials, for angle iron posts, concrete works, plasters, if any, and for other works, shall conform to the requirements as specified in Part-I.

16.4.2 WORKMANSHIP

The work shall comprise of the following :

a) Excavation in ground of required dimensions with all sides vertical in any type of soil including soft rock and removing the soil and dressing it neatly.

b) Filling the holes in full with cement concrete 1:3:6 mix, well packed, after erecting the posts in correct line, level and plumb. In case of any post coming at local depression, the hole may not be of full depth but the depth of concrete will always be made 60 cm raising it above ground level with necessary shuttering.

© 2024 MECON Limited
All rights reserved

c) Where the angle iron posts are specified in the item these shall be 50 mm x 75 mm x 6 mm unless mentioned otherwise. 10 mm dia holes with saw cuts for inserting the wires shall be made as per the spacings of barbed wire shown in drawing or as directed by the Engineer. The foot of the post shall be provided with base plate for anchorage. The spacing shall be 2.5 m or as per drawing. After inserting the wire into holes the socket is to be pressed back.

d) Straining bolts are to be provided 15 m apart from each row of wire for maintaining proper tension in the wire and without any sag or looseness.

e) Posts are to be painted as directed by the Engineer.

16.5 CHAIN LINK FENCING

16.5.1 SCOPE

The work under this specification covers the supply and fixing of galvanized steel chain link fencing with galvanized steel posts chain link fabric.

16.5.2 MATERIAL

Galvanized steel chain link fabric and galvanized steel pipe posts shall be obtained from the approved manufacturer as specified in detail in Part - I .

Workmanship

The GI pipe posts shall be embedded in plain cement concrete not leaner than 1:4:8 foundations. The height of posts above top of foundations and spacing of post shall not be more than 3 m. The chain link fabric shall be fixed to the fencing posts with the help of stretcher galvanised bars (25 x 6 flats) which will be bolted to the lugs welded to the posts. The stretcher bars shall be provided in the lapping of fabric also.

© 2024 MECON Limited
All rights reserved

SPECIFICATION FOR FLYASH-CEMENTBRICKS

(ANNEXURE 1)

1.1 SCOPE

This section covers the setting up of a manufacturing plant for fly ash – cement bricks as per the directions of the Owner. This section also includes transportation of raw materials storage and proportioning of raw materials, handling and mixing of raw materials, manufacturing of bricks, curing, handling and laying of bricks and conducting quality control tests.

1.2 Unless specifically mentioned otherwise, all applicable codes and standards published by the Bureau of Indian Standards shall govern design, workmanship, quality and properties of materials, method of field and laboratory testing, method of measurement for different items of work etc.

1.3 MATERIALS

1.3.1 Cement : 33 grade ordinary Portland cement conforming to IS:269 or Higher Grade above 33Grade.

1.3.2 Sand : Sand shall be free from deleterious materials like clay and silt in sand and shall be less than 5%. Sand shall conform to IS: 383.

1.3.3 Fly Ash : Fly ash used for manufacturing flay ash cement bricks shall conform to Grade-I or Grade-2 of IS:3812. Fly ash will be available near the Electro static precipitators / fly ash storage silos/at a place indicated by Purchaser inside plant area

1.4 Collection of fly ash The contractor has to make his own arrangements for collecting the fly ash from

© 2024 MECON Limited
All rights reserved

the fly ash storage silos or other designated area inside the captive power plant through covered trucks and transporting them to work site. Fly ash will be transferred in the covered trucks by flexible chute. No extra charges will be paid for collecting the fly ash from silos inside the captive power plant and transporting them casting yard. Fly ash is supplied free of cost at the discharge point of silos.

1.5 FIST AID TREATMENT

Necessary first aid treatment shall be made available at site by the contractor.

1.6 STORAGE OF RAW MATERIALS

1.6.1 CEMENT

1.6.1.1 The cement used shall be as specified in Clause No. 1.3.1. The contractor shall carry out the required tests at his own cost in an approved testing laboratory and submit the test report for the approval of the Engineer before using the cement in the works.

1.6.1.2 Cement shall be stored on raised platforms inside stores covered on all sides and roof with provision for ample ventilation. More than ten (10) bags of cement shall not be stacked one above the other in the stack. Sufficient space shall be left around the stacks for approach. Stacking shall be so arranged that bags from the oldest consignment can be conveniently removed first for use following the principle of first in first out (FIFO) basis. For the proper label tag indicating date of supply shall be displayed over the stack of stored cement received that a consignment (Batch) cement which has hardened, clodded or deteriorated due to over stacking or long storage shall not be used in the works and shall be removed from the site immediately with instruction to Employer and Engineer-in-charge.

© 2024 MECON Limited
All rights reserved

1.6.1.3 For ensuring better qualify of fly ash bricks the contractors shall offer to Employer / Engineer-in-charge for checking the lot No. / Grade of cement etc. before unloading the same in their store. The contractor shall also furnish the daily consumption of cement, fly ash bricks manufactured and balance cement available in their store on day-to-day basis. The contractor shall offer for checking the storage of cement as and when required by Employer / Engineer-in-charge.

1.6.2 SAND (FINE AGGREGATE)

Sand shall conform to IS: 383 and shall be river or pit sand. Sand shall be spread at site on clean and hard base or in compartments. Samples of sand to be used shall be submitted to the Engineer-in-charge for approval before commencement of work. The contractor shall ensure that over the entire period of construction all consignments of sand brought to the site conforms to the quality and grading as approved by the Engineer-in- charge before the commencement of work. Whenever directed by the Engineer-in-charge the contractor shall perform tests at his own cost to satisfy that the grading and quality approved for sand is being maintained. Sampling of aggregate shall conform to IS:2430 and tests shall conform to IS: 2386. The percentage to flaky and elongated pieces should not exceed 15%.

1.6.3 FLY ASH

Fly ash being a very fine material gets air borne easily and causes dust nuisance. It may also lead to environmental pollution. The fly ash may require on site temporary stock piling if the rate at which the ash is transported to the fly ash brick manufacturing site is more than the demand for an efficient rate of placement. Such cases should be avoided to the

© 2024 MECON Limited
All rights reserved

extent possible and in case stock piling at site is inevitable, adequate precautions should be taken to prevent dusting. Otherwise the surface of the fly ash stock pile may be covered with tarpaulins or a thin layer of soil not subject to dusting.

1.7 PROPORTION

1.7.1 The proportion of raw materials for the fly ash cement bricks is described based on trial mixes carried over at site earlier based on the test certificates.

1.7.2 The proportion of Fly ash, sand and cement shall be as given below: Cement: : 8 – 10 %
Sand (fine aggregate) : 35 – 40 %
Fly ash : 50 – 60 %

1.7.3 The fly ash bricks manufactured shall meet the testing and acceptance criteria specified in Clause 1.13.

1.8 MOULDS

The moulds shall be made of metal and true to shape and dimensions of the finished product as indicated in the drawings. The moulds shall be close jointed and perfectly smooth with joints caulked to prevent leakage of fly ash mixture slurry. The moulds shall be of rigid construction to prevent distortion and bulging of sides and base. The moulds shall be designed with suitable fastenings to allow them to be struck without injury to the casting. The mould must be made to carry a frog of appropriate size marked on it.

1.9 MIXING

The raw materials shall be weigh batched and uniformly and properly blended in pan mixer for about 3 to 5 minutes with required quantity of water. If the mixture contains lumps, the mixing time shall be increased.

© 2024 MECON Limited
All rights reserved

1.10 MANUFACTURING

Fly ash, sand and cement shall be mixed in proportion as per Cl. No. 1.7 Cement, Sand and Fly ash are added into the pan mixture with optimum water to form a homogeneous mixture uniform in color and then transferred to the moulding machine. In the moulding machine, the mixture is hydraulically pressed or compacted through vibratory press and removed carefully from moulds. After the removal of bricks from the mould, they are air dried for 3 days.

1.11 MARKING

All pre-cast bricks shall be marked in a manner approved by the Engineer- in-charge in a conspicuous place with date of manufacture and marking number. The upper part of the bricks shall be marked distinctly to ensure proper handling.

1.12 CURING

The contractor shall keep all the bricks wet for not less than 28 days.

1.13 TESTING & ACCEPTANCE CRITERIA

1.13.1 SAMPLING AND CRITERIA FOR CONFORMITY

Sampling and criteria for conformity of the bricks shall be as given in IS:5454.

1.13.2 COMPRESSIVE STRENGTH

Minimum compressive strength of fly ash bricks shall be as specified in IS:12894 when tested as per IS:3495 (Part-1) of class 10, as specified in sub clause No. 6.1 page 02.

© 2024 MECON Limited
All rights reserved

1.13.3 DRYING SHRINKAGE

The average drying shrinkage of three units shall not exceed 0.15% when tested by the method described in IS:4139.

1.13.4 EFFLORESCENCE

The bricks shall be tested as per IS:3495 (Part-3) and shall have the rating of efflorescence not more than moderate.

1.13.5 WATER ABSORPTION

The bricks, when tested in accordance with the procedure laid down in IS:3495 (Part-2) after immersion in cold water for 24 hours, shall have average water absorption not more than 20% by mass.

1.14 LABORATORY

The rate of raw materials and quality of bricks shall be tested in the presence of Engineer-in-charge in the approved laboratory with above testing facilities.

1.15 TRANSPORTATION OF FLY ASH BRICKS

The contractor has to make his own arrangement for transporting the cured bricks at no extra cost from casting yard to working place.

© 2024 MECON Limited
All rights reserved

SPECIFICATION FOR CIVIL WORKS

PART – III

NORMS OF CEMENT CONSUMPTION

© 2024 MECON Limited
All rights reserved

LIST OF CONTENTS

SR. NO.	DESCRIPTION	PAGE NO.
1.0	GENERAL	256
2.0	MASONRY WORK	257
3.0	PLAIN/REINFORCED CONCRETE WORK	257-258
4.0	FINISHING WORK	259
5.0	FLOORING WORK	260-265
6.0	MISCELLANEOUS ITEMS	266-267
7.0	WATER SUPPLY/DRAINAGE & SANITARY WORKSS	267-269

© 2024 MECON Limited
All rights reserved

1.0 GENERAL

For calculating the requirements of cement in various items of work the following standards will be adopted. Over the above theoretical quantity of cement, additional allowance upto plus or minus 3% shall also be allowed as certified by the engineer.

For items not covered in this standard, CPWD standards shall be followed or calculated as per uses/requirement in absence of standard norms. Cement required for enabling work and cement required for testing purposes will be taken into account for consumption purpose. However, in no case such quantity should exceed 5% of the total cement used in the work or as certified by the engineer based on actual observation whichever is less.

© 2024 MECON Limited
All rights reserved

2.0 MASONRY WORK

Sl.No.	Description of Item		Cement Requirement
1.	Random rubble	CM 1:4	1.255 quintals per
2.	Random rubble	CM 1:6	0.825 quintal per cum
3.	Coursed rubble	CM 1:6	0.75 quintal per cum
4.	Brick work in	CM 1:4	0.950 quintal per cum
5.	Brick work in	CM 1:6	0.625 quintal per cum
6.	Half brick work in	CM 1:3	1.43 quintals per 10
7.	Half brick work in	CM 1:4	1.06 quintals per 10
8.	75mm thick brick in	CM 1:4	0.65 quintal per 10
9.	75mm thick brick in	CM 1:3	0.81 quintal per 10
10.	Projected brick Drip course etc. in finished with 12mm cement plaster		0.165 quintal per 10
11.	Half brick thick, Honey combed brick work in per sqm	CM 1:4	0.064 quintals

3.0 PLAIN/REINFORCED CONCRETE

1.	RCC/PCC of nominal mix 1:5:10 (excluding finishing with CP)	complete	1.30 quintals per cum of concrete
2.	RCC/PCC of nominal mix 1:4:8 (excluding finishing with CP)	complete	1.70 quintals per cum of concrete
3.	RCC/PCC of nominal mix 1:3:6 (excluding finishing with CP)	complete	2.23 quintals per cum of concrete
4.	RCC/PCC of nominal mix 1:2:4 (excluding finishing with CP)	complete	3.18 quintals per cum of concrete
5.	RCC/PCC of nominal mix 1:1.5:3 (excluding finishing with CP	complete	4.00 quintals per cum of concrete

6. RCC/PCC of nominal mix 1:1:2 complete (excluding finishing with CP 6.10 quintals per cum of concrete

© 2024 MECON Limited
All rights reserved

CONTROLLED CONCRETE - PLAIN AND REINFORCED

7. Concrete grade
   - (i) M -5A
   - (ii) M -5B
   - (iii) M -7.5A
   - (iv) M -7.5B

8. Concrete grade
   - (i) M -10A
   - (ii) M -10B
   - (iii) M -10C

9. Concrete grade
   - (i) M -15B
   - (ii) M -15C
   - (iii) M -15D

10. Concrete grade
    - (i) M -20B
    - (ii) M -20C
    - (iii) M -20D

11.. Concrete grade
    - (i) M -25B
    - (ii) M -25C
    - (iii) M -25D

12. Concrete grade
    - (i) M -30C
    - (ii) M -30D

13. Applying cement slurry on RCC slab for receiving cement concrete flooring.

© 2024 MECON Limited
All rights reserved

To be mutually agreed based on mix design to be prepared by contractor & approved by the Engineer plus wastage and all incidentals as decided.

2.75 kg/sqm

4.0 FINISHING

1.	6mm thick C.P. 1:4	0.280 quintal per	10 sqm area
2.	10mm thick C.P. 1:5	0.370 quintal per	10 sqm area
3.	10mm thick C.P. 1:4	0.430 quintal per	10 sqm area
4.	10mm thick C.P. 1:6	0.300 quintal per	10 sqm area
5.	12mm thick C.P. 1:3	0.734 quintal per	10 sqm area
6.	12mm thick C.P. 1:4	0.547 quintal per	10 sqm area
7.	12mm thick C.P. 1:6	0.360 quintal per	10 sqm area
8.	15mm thick C.P. 1:4	0.655 quintal per	10 sqm area
9.	15mm thick C.P. 1:6	0.440 quintal per	10 sqm area
10.	20mm thick C.P. 1:4	0.850 quintal per	10 sqm area
11.	20mm thick C.P. 1:6	0.560 quintal per	10 sqm area
12.	12mm thick bearing plaster in CM 1:4 with neat cement finish	0.590 quintal per	10 sqm area
13.	Neat cement punning	0.200 quintal per	10 sqm area
14.	Flush or ruled or cut or weather pointing on brick work with CM 1:3	0.155 quintal per	10 sqm area
15.	Flush or ruled or cut out or weather pointing on brick work with CM 1:2	0.200 quintal per	10 sqm area
16.	Raised and cut pointing on brick work with cement mortar 1:3	0.235 quintal per	10 sqm area
17.	Flush or ruled pointing on brick flooring with cement mortar 1:4	0.075 quintal per	10 sqm area
18.	Flush or ruled pointing on brick flooring with cement mortar 1:6	0.050 quintal per	10 sqm area

© 2024 MECON Limited
All rights reserved

5.0 FLOORING

1.	Brick on edge flooring in cement mortar 1:4	1.100 quintal per	10 sqm area
2.	Brick on edge flooring in cement mortar 1:6	0.800 quintal per	10 sqm area
3.	25mm thick (IPS) cement concrete flooring 1:2:4 (1 cement : 2 sand : 4 graded stone chips 12mm nominal size) finished with a floating coat of neat cement.	1.020 quintal per	10 sqm area
4.	40mm thick (IPS) cement concrete flooring 1:2:4 with 20mm and down stone chips finished with a floating coat of neat cement.	1.500 quintal per	10 sqm area
5.	25mm thick (IPS) flooring with base coat 19mm thick 1:2:4 using stone chips 10mm nominal size and 6mm topping coat 1:1 (1 cement : 1 stone chips 3mm size) with a floating coat of neat cement.	1.370 quintal per	10 sqm area
6.	40mm thick (IPS) flooring with base coat 30mm thick 1:2:4 using stone chips 10mm nominal size and10mm topping coat 1:1 (1 cement : 1 stone chips 3 to 6mm size) with a floating coat of neat cement.	2.320 quintal per	10 sqm area
7.	25mm thick cast-in-situ grey terrazzo flooring, under layer 19mm thick cement concrete 1:2:4 with 10mm nominal size chips and 6mm thick topping laid in cement marble powder mix 3:1 (3 cement : 1 marble powder) by weight in proportion of 4:7 (4 cement marble powder mix : 7 marble chips) by volume.	1.370 quintal per	10 sqm area
8.	40mm thick cast-in-situ grey terrazzo flooring, under layer 30mm thick cement concrete 1:2:4 with 10mm nominal size chips and10mm thick topping laid in cement marble	1.575 quintal per	10 sqm area

© 2024 MECON Limited
All rights reserved

	powder mix 3:1 (3 cement : 1 marble powder) by weight in proportion of 4:7 (4 cement marble powder mix : 7 marble chips) by volume.		
9.	40mm thick cast-in-situ terrazzo flooring, under layer 31mm thick cement concrete 1:2:4 with 10mm nominal size chips and top layer 9mm thick with marble chips of size 4 to 7mm nominal size laid in cement marble powder mix 3:1 (3 cement : 1 marble powder) by weight in proportion of 4:7 (4 cement marble powder mix : 7 marble chips) by volume.		
a.	Dark or light shade pigment with grey cement	1.583 quintal per	10 sqm area
b.	Light shade pigment or without any (grey cement) pigment with white cement	1.010 quintal per (grey cement) 0.580 quintal per (white cement)	10 sqm area 10 sqm area
c.	Medium shade pigment with 50% grey cement and 50% white cement	1.295 quintal per (grey cement) 0.290 quintal per (white cement)	10 sqm area 10 sqm area
10	40mm thick cast-in-situ terrazzo flooring, under layer 28mm thick cement concrete 1:2:4 with 10mm nominal size chips and top layer 12mm thick with marble chips of size 7 to 12mm nominal size laid in cement marble powder mix 3:1 (3 cement : 1 marble powder) by weight in proportion of 2:3 (2 cement marble powder mix : 3 marble chips) by volume.		
a.	Dark or light shade pigment with grey cement.	1.705 quintal per	10 sqm area
b.	Light shade pigment or without	0.895 quintal per	10 sqm area

© 2024 MECON Limited
All rights reserved

	any (grey cement) pigment with white cement	(grey cement) 0.810 quintal per (white cement)	10 sqm area
c.	Medium shade pigment with 50% grey cement and 50% white cement	1.300 quintal per (grey cement) 0.405 quintal per (white cement)	10 sqm area 10 sqm area
d.	White cement without any pigment cement	0.895 quintal per (grey cement) 0.810 quintal per (white cement)	10 sqm area 10 sqm area
11.	Terrazzo cast-in-situ skirting and dado, top layer 6mm thick marble chips laid in cement marble powder mix 3:1 (3 cement : 1 marble powder) by weight in proportion of 4:7 (4 cement marble : 7 marble chips) by volume.		
(A)	*18mm thick with under layer 12mm thick cement plaster 1:3 cement*)		
a)	Dark or light shade pigment with grey cement	1.490 quintal per	10 sqm area
b)	Light shade pigment or without any pigment with white cement.	1.090 quintal per (grey cement) 0.400 quintal per (white cement)	10 sqm area 10 sqm area
c)	Medium shade pigment with 50% grey cement and 50% white cement	1.290 quintal per (grey cement) 0.200 quintal per (white cement)	10 sqm area 10 sqm area
(B)	21mm thick, with under layer 15mm thick cement plaster 1:3		
a)	Dark or light shade pigment with grey cement	1.640 quintal per	10 sqm area
b)	Light shade pigment or without any pigment with white cement.	1.230 quintal per (grey cement) 0.400 quintal per (white cement)	10 sqm area 10 sqm area
c)	Medium shade pigment with 50%	1.430 quintal per	10 sqm area

© 2024 MECON Limited
All rights reserved

	grey cement and 50% white cement	(grey cement) 0.200 quintal per (white cement)	10 sqm area
12.	Precast terrazzo tiles 20mm thick with marble chips of sizes upto 6mm laid in 25mm thick bed of lime mortar, jointed with neat cement slurry mixed with pigment		
a)	Dark shades using grey cement	0.88 quintal per	10 sqm area
b)	Light shade using white cement	0.44 quintal per (grey cement) 0.44 quintal per (white cement)	10 sqm area 10 sqm area
c)	Medium shade using 50% grey cement and 50% white cement	0.66 quintal per (grey cement) 0.22 quintal per (white cement)	10 sqm area 10 sqm area
13.	Precast terrazzo tiles 20mm thick with marble chips of sizes upto 6mm in skirting or on walls, laid on 12mm thick cement plaster 1:3 jointed with neat cement slurry		
a)	Dark shades using grey cement	1.395 quintal per	10 sqm area
b)	Light shade using white cement	1.175 quintal per (grey cement) 0.22 quintal per (white cement)	10 sqm area 10 sqm area
c)	Medium shade using 50% grey cement and 50% white cement	1.285 quintal per (grey cement) 0.11 quintal per (white cement)	10 sqm area 10 sqm area
14.	White glazed tiles 5, 6 or 7 mm thick in flooring, skirting and dado on 12 mm thick cement plaster 1 : 3 in base and joined with white cement, slurry etc.	0.942 quintal per (grey cement) 0.25 quintal per (white cement)	10 sqm area 10 sqm area
15.	Marble stone slab flooring over 20mm thick base of lime mortar 1:1:1 (1 lime : 1 surkhi : 1 sand) and jointed with white cement slurry etc.		

© 2024 MECON Limited
All rights reserved

a)	20 mm thick / 30 mm thick / 40 mm thick	0.075 quintal per (white cement)	10 sqm area
16.	Marble stone slab flooring over 20mm thick base of cement mortar 1:4 & jointed with white cement slurry etc.		
a)	20 mm thick	1.275 quintal per (grey cement) 0.075 quintal per (white cement)	10 sqm area 10 sqm area
b)	30 mm thick	1.290 quintal per (grey cement) 0.075 quintal per (white cement)	10 sqm area 10 sqm area
c)	40 mm thick	1.310 quintal per (grey cement) 0.075 quintal per (white cement)	10 sqm area 10 sqm area
17	Marble tiles 18 to 24 mm thick in risers of steps, skirting, dado, walls and pillars laid on 12mm thick cement mortar 1:3 (1 cement : 3 sand) and jointed with white cement slurry	1.16 quintal per (grey cement) 0.075 quintal per (white cement)	10 sqm area 10 sqm area
18.	Extra for each additional thickness of 5 mm granolithic layer of 1:2:4 for flooring	0.016 quintal per	10 sqm of area
19.	12mm thick cement plaster skirting, dado risers of steps and edges of ground sink with CM 1:3 finished with a floating coat of neat cement.	0.800 quintal per	10 sqm of area
20.	15mm thick cement plaster skirting, dado risers of steps and edges of ground sink with CM 1:3 finished with a floating coat of neat cement.	0.995 quintal per	10 sqm of area
21.	19mm thick cement plaster skirting and dado with 12mm thick backing with CM 1:3 and	1.35 quintal per	10 sqm of area

© 2024 MECON Limited
All rights reserved

	7mm topping 1:1 (1 cement : 1 stone chips 3mm size) finished with a floating coat of neat cement.		
22.	25mm thick cement plaster skirting and dado with 18mm thick backing with CM 1:3 and 7mm topping 1:1 (1 cement : 1 stone chips 3mm size) finished with a floating coat of neat cement.	1.85 quintal per	10 sqm of area

© 2024 MECON Limited
All rights reserved

6.0 MISCELLANEOUS

1.	Marble work for wall lining (Veneer work) 1.8 to 2.4 cm thick in CM 1:3 including pointing with white cement mortar 1:2 (1 white cement : 2 marble dust)	0.715 quintal per (grey cement) 0.170 quintal per (white cement)	10 sqm of area 10 sqm of area
2.	Marble work for wall lining (Veneer work) 4 cm thick in CM 1:3 including pointing with white cement mortar 1:2 (1 white cement : 2 marble dust)	1.020 quintal per (grey cement) 0.170 quintal per (white cement)	10 sqm of area 10 sqm of area
3.	Grading roof for water proofing treatment with :-		
a)	CC 1:2:4 (1 cement : 2 coarse sand : 4 stone aggregate 20mm nominal size)	3.2 quintal per	cum of Concrete
b)	CM 1:3	5.1 quintal per	cum of mortar
c)	CM 1:4	3.8 quintal per	cum of mortar
4.	Providing and fixing MS fan clamps of standard shape and size in existing RCC slab including cutting chase and making good.	0.016 quintal	each
5.	Making plinth protection 50mm thick of CC 1:3:6 (1 cement : 3 sand : 6 graded stone aggregate 20mm nominal size) over 75mm bed of dry brick ballast 40mm nominal size well rammed and consolidated and grouted with fine sand including finishing the top smooth.	1.1 quintal per	10 sqm of area
6.	Grouting with		
a)	CM 1:2	7.18 quintal	cum
b)	CM 1:3	5.40 quintal per	cum
7.	DPC 25mm thick (1:2:4)	0.81 quintal per	10 sqm of area
8.	Making plinth protection with bricks on edge in CM 1:6 over 7.5cm bed of dry brick aggregate 40mm nominal size rammed, consolidated and grouted with fine sand and top of bricks pointed with CM 1:2.	0.86 quintal per	10 sqm of area

© 2024 MECON Limited
All rights reserved

9.	Providing and fixing 25mm dia GI pipe outlet in CM 1:3 including cutting and making good the walls.	0.05 quintal per	10 RM
10.	Providing and fixing 40mm dia GI pipe outlet in CM 1:3 including cutting and making good the walls.	0.075 quintal per	10 RM
11.	Providing chases 75mm wide 50mm deep in walls for conduit pipe and filling the same with CC 1:3:6	0.075 quintal per	10 RM
12.	Fixing steel windows with 1:2:4 concrete blocks	0.40 quintal per	10 sqm of area
13.	Cement-sand mortar :		
a)	1:1(1cement :1sand)	10.2 quintals per	cum
b)	1:2(1cement : 2sand)	6.8 quintals per	cum
c)	1:3(1cement : 3sand)	5.1 quintals per	cum
d)	1:4(1cement : 4sand)	3.8 quintals per	cum
e)	1:5(1cement : 5sand)	3.1 quintals per	cum
f)	1:6(1cement : 6sand)	2.5 quintals per	cum

7.0 DRAINAGE/SANITARY & WATER SUPPLY INSTALLATIONS

1.	100mm dia AC rain water pipe I/c fittings with CM 1:2	0.725 quintal per	100 RM of pipe
2.	150mm dia AC rain water pipe I/c fittings with CM 1:2	0.82 quintal per	100 RM of pipe
3.	Fixing IWC pan with traps, pair of footrests, and flushing cistern complete.	0.125 quintal	each
4.	Fixing EWC pan with trap and flushing cistern complete	0.01 quintal	each

© 2024 MECON Limited
All rights reserved

5.	Fixing wash basin and kitchen sink	0.025 quintal	1 each
6.	Fixing urinal cistern including pipes	0.025 quintal	each
7.	Fixing & finishing floor trap	0.015 quintal	each
8.	Fixing HCI pipes and specials, 100mm dia and 75mm dia Including making good the walls	0.135 quintal per	10 RM of pipe
9.	Fixing GI pipes of all dia with clamps (for inside work only)	0.015 quintal per	10 RM of pipe

10. Jointing glazed stoneware pipe with CM 1:1

a)	100 mm dia	2.17 quintals per	10 RM of pipe
b)	150 mm dia	3.23 quintals per	10 RM of pipe

11. Laying cement concrete 1:5:10 all round SW pipe including bed concrete as per standard design

a)	100mm dia SW pipe	19.24 quintals per	100 RM of pipe
b)	150mm dia SW pipe	23.53 quintals per	100 RM of pipe

12.	Gully chamber as per specification.	0.385 quintal	each
13.	Stopcock chamber as per specification	0.185 quintal	each

© 2024 MECON Limited
All rights reserved

14. Inspection chambers as per specification

a)	600x600x600mm deep	1.43 quintals	each
b)	750x600x600mm deep	1.435 quintals	each
c)	900x900x600mm deep	1.885 quintals	each

15. Extra depth of inspection chambers as per specification

a)	600x600mm	0.805 quintal per	RM of depth
b)	750x600mm	1.295 quintal per	RM of depth
c)	900x900mm	1.460 quintal per	RM of depth
d)	1200x900mm	1.835 quintal per	RM of depth

© 2024 MECON Limited
All rights reserved

SPECIFICATION FOR CIVIL WORKS

PART – IV DIMENSIONAL TOLERANCE

© 2024 MECON Limited
All rights reserved

GENERAL

The materials used in construction shall, besides conforming to the specifications and standards mentioned, be the best of the existing kinds obtainable. Where a particular 'Brand' or 'Make' of material is specified such 'Brand' or 'Make' of material alone shall be used.

A high standard of workmanship and accuracy shall be achieved in all sections and parts of the work. The workmanship shall be in accordance with the latest and the best civil engineering practice.

The Contractor shall ensure that all sections of the work are carried out with utmost care to achieve the dimensions shown in drawings or specifications. Where special and close tolerances are required in any particular section of work, these will be shown in the drawing and such tolerances shall be met. In the absence of such specific mention in drawings the following dimensional deviations may be tolerated, provided they do not impair the appearance or render the particular section of work unacceptable to the purpose for which it is intended. Tolerance for materials and workmanship not covered in this part as mentioned hereinafter will be in accordance with the relevant IS code.

DESCRIPTION
Permissible tolerance

Building bricks, in length width and height : As per IS 1077 - 1992

Laterite stone, in length, width & height : Plus or minus 5 mm

NATURAL BUILDING STONE

a) For stones required in ashlar masonry :
Length & Breadth : Plus or minus 5mm
Height : Plus or minus 3mm

b) For stones required other than in ashlar masonry:

© 2024 MECON Limited
All rights reserved

Length & Breadth : Plus 5mm, minus 10mm
Height : Plus 5mm, minus 5mm

Concrete and reinforced concrete pipes :
Length : Plus or minus 1% of standard length
Internal diameter, upto 300 mm : Plus 3 mm Minus 1.5 mm

DESCRIPTION
Permissible tolerance Cast iron spigot & socket pipes and fittings Length of fittings : Plus or minus 10mm

Length of pipe : Plus or minus 20mm

Thickness : minus 1 mm

Internal dia of socket: Plus or minus 3 mm Depth of socket : Plus or minus 10mm External dia, upto 75 mm : Plus or minus 3mm

100 mm : Plus or minus 3.5mm

150 mm : Plus or minus 4mm

Stoneware pipes, in length

upto 75 cm : Plus or minus 10mm

Upto 90 cm : Plus or minus 15mm

In thickness of barrel and socket not exceeding 450mm : Plus or minus 2mm

In thickness of barrel and socket between 500 to 600mm : Plus or minus 3mm

Glazed tiles, length of all 4 sides : Plus or minus 0.8mm

Individual dimensions and thickness : Plus or minus 0.5 m

© 2024 MECON Limited
All rights reserved

Metal doors, windows and ventilators - In overall dimension : Plus or minus 1.5 mm

Wooden doors, windows, ventilators Overall dimension of door, window, ventilators : Plus or minus 3 mm

All components of shutter except glazing bar Width

© 2024 MECON Limited
All rights reserved

: Plus or minus 3 mm

Thickness : Plus or minus 1 mm

Glazing bar, width & thickness : Plus or minus 1 mm

Mild steel tubes, tubulars and other wrought steel fittings

a) Thickness

i) butt welded light tubes : Plus not limited minus 8%

medium and heavy tubes : plus not limited minus 10%

ii) seamless tubes : plus not limited minus 12.5%

b) Weight

i) single tube (irrespective of the quantity) : + 10% , - 8%

ii) for quantity of less than 150m of one size : + 10% , - 8%

iii) for quantity of 150m and over of one size
: + 4% , - 4% Earth work
Finished level of site levelling in hard rock : Plus or minus 50mm

Finished level of site levelling except for hard rock: Plus or minus 100 mm

Level of pits, trenches foundations : Plus or minus 50mm

Concrete & Reinforced concrete

Footings, plan dimension : Plus 50 mm Minus 12 mm

Eccentricity : 0.02 times the dimension of footing in the direction limited to 50 mm

Thickness : Plus or minus 0.05 times the specified thickness

© 2024 MECON Limited
All rights reserved

Foundations

Deviation of planes and lines of their intersection from vertical or inclination along full height : Plus or minus 20 mm

Deviation of horizontal plane from horizontal line

for 1 m of the plane in any direction
: Plus or minus 5mm for the whole plane
: Plus or minus 20mm Sizes of cross section
: Plus or minus 8mm Surfaces of inserts to support loads
: Plus or minus 5mm

Length of elements : Plus or minus 20 mm

EQUIPMENT FOUNDATIONS :

Top level of bolt : Plus 20mm

Top level of foundation before grouting : Minus 20mm

Axes of anchor bolts in plan : Plus or minus 5mm Axis of foundation in either direction : Plus or minus 10mm Deviation in vertical line along height
: Plus or minus 10mm Sizes of pits in plan
: Plus or minus 20 mm Sizes of steps in plan
: minus 20mm
Levels of steps, benches and pits : minus 20mm

Axes of inserts in plan : Plus or minus 10 mm Basic dimensions in plan : Plus or minus 10mm
Deviation of horizontal plan from horizontal line
for 1 m of plane in any direction : Plus or minus 5mm
for the whole plane : Plus or minus 20mm
Local deviations of top surface when checked with a 2 m long straight edge : Plus or minus 8mm

© 2024 MECON Limited
All rights reserved

BUILDINGS :

Surfaces when checked with a 2 m long straight edge : Plus or minus 8mm

Sizes of cross section : Plus 8mm Minus 0 mm
Length of elements : Plus or minus 20mm
Deviation from horizontal plane, for whole building : Plus or minus 10mm
Plumb in verticality : 1 in 1000 of height for columns supporting floor beams : Plus or minus 10mm for framed columns linked with crane girders and beams : Plus or minus 10mm
Reinforced concrete walls : Length : Plus or minus 20mm
Flatness of surface when checked with a 2 m long straight edge : Plus or minus 8mm

Level of top surface to support assembled elements : Plus or minus 5mm
Deviation in planes and lines of intersection from vertical : Plus or minus 15mm
Size of cross section : Plus or minus 8mm

PLACING OF REINFORCEMENT :
Length of bar upto 75 cm long (Other than straight bars)

: Plus 3 mm Minus 5 mm

75 - 150 cm long : Plus 5 mm Minus 10 mm

150 - 250 cm long : Plus 6 mm Minus 15 mm

250 cm long and above : Plus 7 mm Minus 25 mm Straight bars, all lengths : Plus or minus 25 mm Spacing of bars : Plus or minus 5 mm **Anchor bolts :**
Shift in location in plan : Plus or minus 5 mm

Same, when bolts are located outside of structural columns
: Plus or minus 10mm Top level

© 2024 MECON Limited
All rights reserved

: Plus 20 mm Threaded length
: Plus 30 mm

Masonry **For Walls**
For Pillars

Width : Plus or minus 10 mm
Plus or minus 10 mm

Shift in axes : Plus or minus 10 mm
--- ---

Deviation in row from horizontal line for every 10m length

: Plus or minus 15 mm

--- ---

Flatness of surface when checked with a 2 m long straight edge

: Plus or minus 10 mm

Plus or minus 5 mm

Deviation in lines separating storeys Deviation of surface from vertical and and at angles and corners

: Plus or minus 15 mm

© 2024 MECON Limited
All rights reserved

Plus or minus 15 mm

for 1 storey : Plus or minus 10 mm

Plus or minus 10 mm

for whole building : Plus or minus 30 mm

Plus or minus 30 mm

Dimensions of openings for doors, windows etc : Plus 15 mm
Minus 0 mm

Flooring, skirting, dado and plastering :

Insitu concrete floor : 4 mm

Concrete tile and mosaic, in any 3 m length : 3 mm

in large open area : 15 mm

wall tiling - surface should not vary from general plane by more than 1 in
200. Marble and such superior work,
in any 2 m length

: 1.5 mm

in any row : 3 mm

Plastered surfaces, flatness when checked with a 2 m long straight edge

© 2024 MECON Limited
All rights reserved

: 3 mm

Vertical surfaces, upto 1 storey : 5 mm

Over full heights : 10 mm

Metallic Inserts on assembled components length and width : Plus or minus 3 mm

Road work

The levels of the sub-grade and different pavement courses should not vary from those calculated with reference to the longitudinal and cross-sections of the road as shown on the drawing beyond the tolerance given below :-

Sub-grade :
plus or minus 25mm Sub-base
: plus or minus 20mm Base
: plus or minus 15mm Wearing course
: plus or minus 6mm

© 2024 MECON Limited
All rights reserved

SPECIFICATION FOR CIVIL WORKS

PART – V METHOD OF MEASUREMENT

© 2024 MECON Limited
All rights reserved

LIST OF CONTENTS

SR. NO.	DESCRIPTION	PAGE NO.
1.0	GENERAL	
2.0	EARTHWORK	
3.0	ANTI - TERMITE TREATMENT	
4.0	CONCRETE (PLAIN & REINFORCED)	
5.0	MASONRY	
6.0	PLASTERING	
7.0	WHITE WASHING, COLOUR WASHING & PAINTING	
8.0	FLOORING, PAVING & FACING WORKS	
9.0	WOODWORK	
10.0	METAL DOORS, WINDOWS & VENTILATORS	
11.0	GLAZING	
12	WATER SUPPLY, DRAINAGE, SEWERAGE & SANITATION	
13.0	WATER PROOFING, DAMP PROOFING	
14.0	CEILING AND LINING	
15.0	ROAD WORK	

© 2024 MECON Limited
All rights reserved

1.0 GENERAL

1.1 The method of measurement of the various items of work shall be in accordance with IS : 1200 (Part 1 to 28) - 2018 to 2022 unless otherwise mentioned in this part or in the schedule of items or in preamble or in the specification.

1.2 If there is any contradiction in meaning between any portion of this part and that of IS :1200 (Part 1 to 28) - 1971 to 1993, the stipulation of this part shall prevail.

1.3 The descriptions and explanations given herein have as much forces as though they are incorporated into the description of the items themselves in the schedule of items.

2.0 EARTH WORK & SAND FILLING

2.1 GENERAL

2.1.1 Each dimension upto 25 m shall be measured to nearest 0.01 m and to nearest 0.1 m for dimensions over 25 m. Areas shall be worked out to the nearest 0.01 m2 and cubical contents to the nearest 0.01 m3.

2.1.2 Shoring and strutting shall not be measured separately unless otherwise specified.

2.1.3 Dewatering for earth work and sand filling work shall not be measured separately unless otherwise specified.

2.1.4 For classification of soils, relevant clauses of Technical specification (workmanship and other requirements) is to be followed.

© 2024 MECON Limited
All rights reserved

2.2 REQUIREMENTS FOR PARTICULAR WORKS

2.2.1 SITE LEVELLING

2.2.1.1 For site levelling levels shall be taken jointly before start & after completion of work and the quantity computed based on the levels. Measurements shall be made only for excavation and no separate measurement for filling shall be made except where earth, borrowed from elsewhere for site levelling work, will be measured separately only for that borrowed portion of earth.

2.2.1.2 In cases where it is not possible or convenient to take measurements from excavated cuts or borrow pits, excavation shall be worked out from filling based on the levels to be taken before and after completion of works. Deduction of 10 percent will be made for voids, however for consolidated fills done through heavy mechanical means, the deduction for voids shall be 5% in place of 10%.

2.2.1.3 In exceptional cases where the quantity is measured on the lorry measurement, loose stacks, boxes or any other similar method with the approval of the Engineer the deduction for voids shall be 20 per cent from the actual quantity.

2.2.2 EXCAVATION

2.2.2.1 Before commencing excavation of foundations for buildings and structures, the initial ground levels shall be jointly recorded. The depth of excavation and the calculation of lift shall be based on this. Normally the initial ground level shall be considered as the level of the site as handed over to the contractor. In case excavation is planned and approved to be taken up subsequent to terracing, the terrace level shall be treated as initial ground level.

2.2.2.2 Excavation of foundations, trenches, basements, pits etc., shall be measured to the dimensions shown in the excavation plan, if any, or of the lowest concrete or masonry course, as the case may be and the actual depth. Working space and slopes shall not be measured.

© 2024 MECON Limited
All rights reserved

2.2.2.3 Excavation of rock shall be measured from stacks of excavated rock with a deduction of 50 per cent for voids or measured in the solid based on levels.

2.2.2.4 In case of following works, no measurement will be recorded for the excavation beyond drawing / specification.

(a) In work which will be covered externally with damp proof covering.
(b) In work which requires formwork.
(c) In work which requires workmen to operate from the outside and for guniting and post tensioned concrete, ground beams etc.

However, if there is a specific provision otherwise in the item/specification/preamble, for authorised working, it shall be measured accordingly. This working space may be 60 cm. measured from the face of the structure at lowest level, unless otherwise mentioned.

2.2.2.5 SURFACE DRESSING

Trimming of natural ground, excavated surface and filled up area to remove vegetation and/or small in equalities not exceeding 15 cm deep shall be described as surface dressing and measured in square metres unless otherwise specified in the schedule of items/ preamble.

2.2.2.6 LEAD

The distance for removal shall be measured over the shortest practicable route and not necessarily the route actually taken.

The description of the item shall include loading and unloading.

For the purpose of the measurement of the lead, the area excavated shall be divided in suitable block and for each block the distance from the centre of the block to the centre of the placed earth pertaining to this block shall be taken as lead.

© 2024 MECON Limited
All rights reserved

2.2.3 BACK FILLING/FILLING

2.2.3.1 In foundations, trenches, basements, pits, etc. and in other like areas, the measurements shall be the theoretical volume of the filling computed from drawings i.e. the volume measured under excavation minus the volume occupied by the structure and part filling if any, done otherwise.

2.2.3.2 In filling under floors the measurements shall be the theoretical volume as per drawings after deducting the part filling if any, done otherwise.

2.2.3.3 In embankments, the work shall commence only after recording jointly the initial ground levels and the measurements shall be made on the basis of finished cross section and initial ground levels. Where controlled compaction by mechanical compaction is done, 5% deduction for voids shall be made. In case controlled compaction by mechanical means is not done then deduction for voids shall be 10%.

2.2.3.4 Filling/Back filling shall not be measured separately for items of excavation, where filling/back-filling is a part of the composite item and as such is included in excavation item itself.

3.0 ANTI-TERMITE TREATMENT

Measurement shall be the plinth area of the ground floor of the building treated. Dimensions shall be measured to the nearest 0.01 m and area to nearest 0.01 m2.

© 2024 MECON Limited
All rights reserved

4.0 CONCRETE (PLAIN & REINFORCED)

4.1 CONCRETE

4.1.1 Dimensions shall be measured to nearest 0.01 m except for the thickness of slab, which will be to nearest 0.005 m. Areas shall be worked out to nearest 0.01 m2 and cubic contents to nearest 0.01 m3.

4.1.2 The concrete shall be measured as per drawings except in the cases of approved variations which will be measured separately.

No deductions shall be made for the following :

i) Ends of dissimilar materials such as beams, rafters, purlins etc., upto 500 cm2 in cross section.

ii) Openings upto 0.1 m2 in area (In calculating area of an opening, the thickness of any separate lintel or sill shall be included in the height. No extra labour for forming such opening or voids shall be measured).

iii) Volume occupied by reinforcement or other embedments such as anchors, inserts, conduits or volume occupied by pipes, sheathing etc. not exceeding 100 sq. cm. each in cross sectional area or as specified.

iv) Small voids not exceeding 40 cm2 each in cross section.

v) Moulds, drip moulding, chamfer, splay, beds, grooves and rebates upto 10 cm in width or 15 cm in girth.

4.1.3 Columns shall be measured from top of column base to underside of first floor slab and from top of floor to underside of floor slab above thereafter. Beams shall be measured from face to face of columns and will include haunches. Depth of beam shall be measured from bottom of slab and in the case of inverted beams from top of slab. Chajjas and other cantilevers shall be measured from the

© 2024 MECON Limited
All rights reserved

face of the projection. Where vertical fins are combined with chajja, the latter shall be measured clear between fins. In case chajja is not combined with lintel, beam or slab, it shall be measured inclusive of bearing.

4.2 REINFORCEMENTS

4.2.1 Norms for Steel Consumption

The requirement of mild and high strength deformed bars for various works like reinforcement, guard bars, fan hooks etc. shall be calculated as mentioned below :

i) As per drawing including

(a) Authorised laps, bends, standard hooks and deviations etc.

(b) Spacer bars, chairs, hangers, supports, spacer blocks dowels etc. are to be considered for wastage only and not to be measured for payment purpose.

ii) Quantity upto 0.5% of (i) above towards unaccounted wastages, plus

iii) Quantity upto 3% of (i) above towards cut pieces, which shall be pieces below 2m. length. These cut pieces shall not be taken back even though steel has been issued by the client/owner.

4.2.2 Reinforcements shall be measured in lengths to the nearest 0.01 m for various diameters of bar and converted into weight in tonnes to the nearest kg. on the basis of standard weights as per IS : 1786-2008. No allowance shall be made in the weight for rolling margin.

4.2.3 Authorised laps, standard hooks, bends shall be measured.

4.2.4 Sapacer bars, chairs, hangers, supports, spacer blocks and unauthorised laps etc. shall not be measured unless otherwise specified.

© 2024 MECON Limited
All rights reserved

4.2.5 Dowels neither shown on the drawings nor instructed by the Engineer, but required for construction facilities shall not be measured for payment.

4.2.6 Modification of already embedded reinforcement, if required due to faulty fabrication or placement, shall not be measured for payment.

4.2.7 The measurements of reinforcements (including authorised laps, hooks, bends) shall be taken only from Bar bending lists or from the drawings except in the cases of approved variations which will be measured as per 4.2.2.

4.2.8 Wire netting and fabric reinforcement shall be described (including meshes and wire/strands) and measured in square metre, unless otherwise specified in the schedule of item. Authorised laps shall be measured. Raking or circular cutting and waste shall be included in the description of item.

4.2.9 Hoop iron shall be fully described and measured in running metres unless otherwise specified in the schedule of item.

4.2.10 Binding wire for the reinforcement shall not be measured separately and shall be included in the item of reinforcement.

4.3 ADMIXTURE

Admixture will be measured separately as specified or on the basis of the requirement as approved by the Engineer.

4.4 FORMWORK

Each dimension shall be measured to the nearest 0.01 m and area to the nearest
0.01 sq.m.

© 2024 MECON Limited
All rights reserved

4.4.1 Formwork shall be measured as the actual surface in contact with concrete and paid in sq.m. unless included in the rate for concrete in specific item of work.

4.4.2 All the measurements shall be computed from the drawings except in the cases of approved variations which will be measured separately.

4.4.3 Formwork shall not be measured separately for precast concrete work, grouting and damp proof course which shall be included in the concrete rates.

4.4.4 No measurement for formwork in construction joints shall be made.

4.4.5 Openings upto 0.1 sq.m. shall be neglected, as if non - existent, for the purpose of formwork measurement.

4.4.6 No extra measurement or payment shall be made for making the form work water proof or for supports, scaffolding, staging, centering, approaches etc.

4.4.7 No measurement shall be taken for the formwork in pockets, openings, chambers, chases etc., in concrete if the cross sectional area is less than or equal to 0.1 sq.m. in each case. If the cross section area of any opening exceeds 0.1 sq.m. the actual area of the formwork shall be measured for payment.

4.5 EMBEDDED PARTS

4.5.1 These shall be measured on the basis of standard theoretical weight of the complete insert according to the drawing/direction.

4.5.2 Embedded steel, which are the integral parts of the embedment according to drawing and are required for anchoring the embedded parts in concrete shall be measured on the basis of the theoretical standard weight. In case of anchor bolts the theoretical weights of the nuts, lock nuts, check nuts and washers shall be added in the

© 2024 MECON Limited
All rights reserved

measurement for payment.

4.5.3 All bye-works such as jigs, fixtures, templates and other arrangements which are not integral parts of the embedded parts, but necessary to secure those (embedded parts) in position shall not be measured for payment.

4.5.4 Anti-corrosive paint over the exposed surfaces and protection of the anchor bolts with grease tc., shall not be measured for payment.

4.5.5 Modification works necessary to rectify the mistake of already placed embedded parts shall not be measured.

4.6 GROUTING

4.6.1 Grouting shall be measured in volume except in the cases of grouting by special cement compound or epoxy compound which will be measured by number.

4.6.2 Measurement shall be computed from the drawings except in the cases of approved variations which shall be measured separately and subsequently added to or deducted from.

4.6.3 Necessary formwork shall not be measured for payment.

4.7 DAMP PROOF COURSE

4.7.1 Measurement shall be in sq.m. stating thickness and computed from the drawings except in the cases of approved variations which will be measured separately.

4.7.2 Necessary formwork shall not be measured for payment.

5.0 MASONRY

5.1 Dimensions shall be measured to nearest 0.01 m, areas to nearest 0.01 m2 and cubic contents to nearest 0.01 m3.

5.2 No deduction shall be made for :

© 2024 MECON Limited
All rights reserved

(i) Ends of dissimilar materials such as joints, beams, posts, girders, trusses, lintels, purlins etc., upto 0.1 m2 in section.

(ii) Openings upto 0.1 m2 in area.

(iii) Wall plates, bed plates, bearing of slab etc., thickness not exceeding 10 cm. and bearing not extending over the full thickness of wall.

(iv) Cement concrete blocks for holdfasts and the like.

(v) Iron fixtures such as pipes etc. upto 300 mm. dia. and hold fasts for doors and windows.

5.3 Dressed stonework such as in sills, cornices , column caps, copings etc., shall be measured as the smallest rectangular block from which the finished stone can be worked.

5.4 Honeycomb openings shall not be deducted from the area of honeycomb brickwork.

5.5 Brickwork of full brick width or more shall be measured in cu.m. while of thickness of half brick or less shall be measured in sq.m., unless otherwise specified.

5.6 Reinforcements for reinforced brick work shall be measured separately, unless otherwise specified and no deduction for reinforcement shall be made from brick- work.

6.0 PLASTERING & POINTING

6.1 All plastering and pointing shall be measured in sq.m. unless otherwise described.
Dimensions shall be measured to nearest 0.01 m and areas to 0.1 sq.m.

6.2 Ceiling shall be measured between walls or partitions (dimensions before plastering) shall be taken. Measurement of wall plastering shall be taken between walls or partitions for length (dimension before plastering) and

© 2024 MECON Limited
All rights reserved

from top of floor or skirting to ceiling for height.

6.3 The methods of measurement including the deductions for openings etc., shall be according to the relevant part of IS : 1200 (Part 1 to 28) - 1971 to 1993.

7.0 WHITE WASHING, COLOUR WASHING, PAINTING & OTHER FINISHES.

The method of measurement shall be according to the relevant part of IS : 1200 (Part 13 & 15) - 1987.

8.0 FLOORING, PAVING & FACING WORKS

8.1 The work shall be measured as a complete finished item including necessary underbed, adhesives, dividing strips, joint sealing and necessary grinding, polishing and finishing where specified. The subgrade or the base course shall be measured separately against respective item unless otherwise specified.

8.2 All works shall be measured net, dimensions being measured to nearest 0.01 m and areas to nearest 0.01 sq.m. Any opening less than 0.1 sq.m. in area shall not be deducted nor any extra payment made for that.

8.3 Building paper or water proofing by bituminous felts/mastic asphalt treatment, where specified to be laid below floor, shall be measured separately for payment unless otherwise specified.

8.4 Laps and seams in sheet finishing (linoleum, cork, PVC, rubber & like) shall be deemed to be included in the item itself even if not described explicitly and shall not be measured and paid separately.

© 2024 MECON Limited
All rights reserved

9.0 WOODWORK

9.1 All work shall be measured net for finished dimensions as fixed, that is no extra measurement or allowance shall be made for shape, joints, wastage etc. subject to specific provision made in the IS : 1200 (Part 21) - 1973 and for dimensions supplied beyond those specified in the drawing.

9.2 WOODEN FRAME

rought, finished and fixed shall be measured net for overall length nearest to 0.01 m, width and thickness to the nearest 2mm or as specified in the drawing and cubic contents calculated in cubic metres to the nearest three places of decimals.

WOODEN SHUTTERS OF ALL TYPES

Length and width of the shutters shall be measured net as fixed to the nearest cm. in closed position covering the rebates of the frame but excluding the gap between the shutter and the floor and the area calculated in square metre upto two places of decimal.

Over lap of two leaves of shutter shall not be measured separately.

HAND RAILS

Hand rails of finished width and depth as specified in the item shall be measured in running metres upto two places of decimal.

9.3 Painting and polishing, unless otherwise described in the schedule of items, shall be measured separately for payment.

9.4 Builder's hardware and fittings for doors windows and ventilators shall be measured separately, unless stated otherwise in the Schedule of Items. Hardware and fittings shall be measured according to IS : 1200 (Part-VII) - 1972.

© 2024 MECON Limited
All rights reserved

9.5 Hold fasts for door, window and ventilator frames shall be measured separately.

9.6 TIMBER PARTITIONS

This shall be measured in area calculated in sq. m. to the nearest two places of decimal.

9.7 GLAZED SHUTTERS AND GLAZED PARTITIONS (WOODEN)

Glazed shutters/glazed partitions with wooden frames shall be measured as a single item in area calculated in sq.m. to the nearest two places of decimal. No separate measurement for glazing/glass panes shall be made.

9.8 Provision of making holes/opening/chases in masonry/ concrete flooring etc. for fixing and making good of the same shall not be measured separately for payment.

9.9 Bitumen painting or approved wood preservative of the timber surfaces in contact with masonry/concrete floor etc. shall not be measured for payment.

10.0 METAL DOORS, WINDOWS & VENTILATORS

10.1 Door, window and ventilator/louvers as fixed, shall be measured net as clear width between jambs and clear height between floor/sill and underside of lintel, but excluding the gap between door shutters and floor. Dimensions shall be calculated to the nearest 0.01 m., area calculated in sq.m. upto two places of decimal.

10.2 For MS collapsible shutter/gate, rolling shutter sliding folding door, length and breadth shall be measured to the nearest cm. for the clear area of opening as per drawing in which they are installed and calculated in sq.m. to the nearest two places of decimal.

10.3 M.S. Rolling grills, doors of steel plate, sliding door louvered ventilators, gates, grills, as fixed, shall be measured and computed to weight from the size as per drawing unless otherwise specified.

© 2024 MECON Limited
All rights reserved

10.4 Glazed doors, windows, louvers, partitions (both steel and aluminium) shall be measured in sq.m. to the nearest two places of decimal. No separate measurement for glazing/glass panes shall be made for payment.

11.0 GLAZING

11.1 Glazing shall not be separately measured for doors, windows and ventilators unless otherwise specified.

11.2 North light and roof glazing shall be paid as the area from outside to outside of glazing including frames, to the nearest 0.01 sq.m.

11.3 Glazing, where shown in the schedule of items as a separate item, shall be measured from edge to edge of glass as fixed.

12.0 WATER SUPPLY, DRAINAGE, SEWERAGE & SANITATIONS

12.1 All the pipelines buried under soil/masonry/floors/ concrete, laid over/underground/along masonry/along under floor shall be measured in metres along the centreline together with fittings/specials upto two places of decimal against respective schedule of items for different diameter (the diameter as specified shall mean nominal bore except PVC pipe) unless otherwise specified.

12.2 All necessary earth work in trenches for laying pipe lines including dewatering, levelling and trimming to the gradient, sand filling in the trenches before laying the pipe, back filling either by sand or by approved borrowed soil after laying the pipe lines including necessary compaction by spraying water and levelling/dressing the same shall not be measured separately for payment unless otherwise specified.

12.3 All required specials, i.e. bends tees, shoes cowls, plug, elbows, unions, caps, checkout and the like excluding valves shall not be measured separately for payment unless otherwise specified.

© 2024 MECON Limited
All rights reserved

12.4 All fixing and supporting arrangement of the pipes like the supports, saddles, brackets, clamps, cleats, covering the pipes with concrete in case of pipes laid over ground, special arrangement for supporting the pipe like while coming out from the building to the trenches etc. shall not be measured separately for payment, unless otherwise specified.

12.5 All the arrangement in road crossing like cutting the road, diverting the road and drains, concealing the pipes with suitable approved measures, backfilling the area, covering and making good of the road with similar materials/design shall not be measured separately for payment, unless otherwise specified.

12.6 Septic tanks, inspection pits, manholes etc., shall be considered as a composite single item including excavation, dewatering, concrete, masonry, back filling, protection of other service lines and all the like works unless otherwise specified.

12.7 All the valves and all the bathroom/W.C./Kitchen fixtures like bib tap, stop cock, shower, all sanitary wares, towel rails, mirrors etc., shall be measured separately under respective item in the schedule, unless otherwise specified.

13.0 WATER PROOFING, DAMP PROOFING

13.1 WATER PROOFING FOR ROOFS

13.1.1 Length and breadth shall be measured in metre upto two places of decimal and area calculated in sq.m. upto two places of decimal.

13.1.2 Measurement shall be made for the net covered area. No measurement shall be made for overlapping for end and side joints and for bends around/along the corners, ends and for special treatment around pipes, rain water gulleys, steel structure and the like etc. No deduction shall be made in the measurement for the opening of area less

© 2024 MECON Limited
All rights reserved

than 0.1 m2 each and no extra payment shall also be made for any special works made around such openings.

13.1.3 Water proofing treatment shall be considered as a single composite item including priming painting coat, water proofing felts, binding bituminous coats, top bituminous coat and pea size gravel or sand finishing etc.

13.1.4 For lime concrete terracing the consolidated thickness shall be considered for measurement.

13.2 FOR WATER PROOFING TREATMENT IN BASEMENT

13.2.1 WITH BITUMINOUS FELTS

13.2.1.1 Length and breadth shall be measured in metre upto two places of decimal and area calculated in sq.m. upto two places of decimal.

13.2.1.2 Measurement shall be made for the net covered area. Measurement shall be made from the drawing, except in certain special cases where it is impossible to compute from drawing and the measurement shall be made as executed. No measurement shall be made for overlaps, special measures around projected pipes, sealing the bends/rounds and in other cases, necessary projection/ overlap for the connection between vertical and horizontal junction etc.

13.2.1.3 Water proofing treatment shall be considered as a single composite item, including priming painting coat, water proofing felts, binding bituminous coats and top bituminous coat etc.

© 2024 MECON Limited
All rights reserved

13.3 MASTIC TREATMENT

13.3.1 Length and breadth shall be measured in metres upto two places of decimal and area calculated in sq.m. upto two places of decimal.

13.3.2 Measurement shall be made for the net covered area. No deduction in measurement shall be made for opening of area upto 0.1 sq.m. each and no extra payment shall be made for any special treatment around such openings. No measurement shall be made for extra payment for the special works necessary for junctions, corners, roundings, bends for the works around pipes and the like.

14.0 CEILING & LININGS

14.1 Dimensions shall be measured to the nearest 0.01 m., areas to be worked out to the nearest 0.01 sq.m.

14.2 Work formed to circular surfaces shall be measured separately unless otherwise specified.

14.3 All work unless otherwise described shall be measured as flat in sq.m.

14.4 No deduction in measurement shall be made for openings not exceeding 0.4 sq.m. and no extra measurement shall be made for forming such openings.

15.0 ROAD WORK

15.1 Dimensions shall be measured to nearest 0.01 m. Where the thickness is less than 20 cm., it shall be measured to nearest 0.005 m. Areas shall be worked out to nearest 0.01 sq.m. and cubic contents to the nearest 0.01 cu.m.

15.2 Where thickness is measured, it shall be the minimum thickness after compaction.

15.3 Cement concrete bases and roads shall be measured either in sq.m. or cu.m. as specified.

© 2024 MECON Limited
All rights reserved

15.4 Unless otherwise specified, expansion and dummy joints shall be described and measured separately and given in running metres stating the thickness and depth of the joints.

© 2024 MECON Limited
All rights reserved

LIST OF IS & CODES REFERRED (ANNEXURE-A)

For concrete.

IS 2386 (Part 1 to 8) – 1963 : Method of Test for aggregates for concrete

IS 456 – 2000 : Code of practice for plain and reinforced concrete.

IS 712 - 1984 : Specification for building limes.

IS 3182 – 1986 : Specification for broken brick (burnt clay) fine aggregate for use in lime mortar.

IS 269 – 2015 : Specification for 33 grade ordinary Portland Cement.

IS 455 – 2015 : Code of practice for Portland Slag Cement.

IS 1489 – 2015 : Specification for Portland Pozzolana Cement.

IS 8041 – 1990 : Specification for rapid hardening Portland Cement.

IS 8112 – 2013 : Specification for 43 grade ordinary Portland Cement.

IS 12269 – 1987 : Specification for 53 grade ordinary Portland Cement.

IS 8043 – 1991. : Specification for Hydrophobic Portland Cement

IS 12330 – 1988 : Specification for Sulphate resisting Portland Cement.

IS 6452 – 1989 : Specification for high alumina cement for structural use.

IS 8042 – 2015 : Specification for White Portland Cement.

IS 3535 – 1986 : Methods of sampling Hydraulic Cement.

IS 4031 (Part 1 to 15) - 1988 to 1996 : Methods of test for Hydraulic Cement.

IS 4032 – 1985 : Method of Chemical Analysis of Hydraulic Cement.

IS 2645 – 2003 : Specification for Integral Cement Waterproofing Compounds.

IS 1599 – 2023 : Method of Bend Test.

IS 1608 (Part 1 to 3) – 2018-2022 : Method of Tensile Testing of Steel Products.

IS 6925 – 1973 : Method of test for determination of Water Soluble

© 2024 MECON Limited
All rights reserved

Chlorides in concrete admixtures.

IS 432 – 1982 : Specification for mild steel and medium tensile steel bars and hard drawn steel wire for concrete reinforcement.
IS 1786 – 2008 : Specification for high strength deformed steel bars and wires for concrete reinforcement.
IS 1566 – 1982 : Specification for hard drawn steel wire fabric for concrete reinforcement.
IS 280 – 2006 : Mild steel wire for general engineering purposes.
IS 2062 – 2011 : Structural steel (Standard Quality).
IS 1161 – 2014 : Steel Tubes for Structural purposes.
IS 5624 – 2021 : Foundation bolts.
IS 1363 - (Part 1 to 3) – 2018-2023 : Hexagon Head bolts, screws, nuts.
IS 2016 – 1967 : Plain washers.
IS 3063 – 1994 : Single coil rectangular section spring washers.
IS 1239 (Part 1&2)- 2004 & 2011 : Mild Steel Tubes and other wrought steel pipe fittings.
IS 1367 – 2002 : Technical supply conditions for threaded steel fasteners.
IS 1030 – 1998 : Carbon steel castings.
IS 3480 – 1966 : Flexible steel conduit for electrical wiring.
IS 2667 – 1988 : Fittings for rigid steel conduits for electrical wiring.

IS 9537 (Part 3) – 1983 : Conduit for electrical installations - Rigid Plain conduits of insulating materiel.
IS 6946 – 1973 : Flexible non-metallic conduits for electrical installations.
IS 3419 – 1989 : Fittings for rigid non-metallic conduits.
IS 5913 – 2003 : Methods of tests for Asbestos Cement Products.
IS 2098 – 1997 : Specification for asbestos cement building boards.
IS 2096 – 1992 : Specification for asbestos cement flat sheets.
IS 9537 (Part 2) – 1981 : Conduit for electrical installations - Rigid steel conduits.
IS 2614 – 1969 : Method for sampling of fasteners.
IS 1592 – 2003 : Specification for asbestos cement pressure pipes.
IS 9627 – 1980 : Specification for asbestos cement pressure pipe (Light duty).
IS 6908 – 1991 : Specification for asbestos cement pipes and fittings for

© 2024 MECON Limited
All rights reserved

sewerage and drainage.

IS 1626 (Part 1 to 3) - 1994 : Specification for asbestos cement building pipes & pipe fittings and roofing fittings

IS 459 – 1992 : Specification for unreinforced corrugated and semi corrugated asbestos cement sheets

IS 1077 – 1992 : Specification for common burnt clay building bricks.

IS 3495 (Part 1 to 4) -2019: Method of Test for burnt clay building bricks.

IS 3620 – 1979 : Specification for laterite stone block for masonry.

IS 1121- 2023 : Method of test for determination of strength properties of natural building stone.

IS 1124 – 1974 : Method of test for determination of water absorption Sp. Gr. etc. of building stones

IS 1125 – 2013 : Method of test for determination of weathering of natural building stones.

IS 1126 – 2013 : Method of test for determination of durability of building stone.

IS 1127 – 1970 : Recommendation for dimensions and workmanship of natural building stones for masonry work.

IS 2185 (Part-1)-2005 : Specification for concrete masonry unit Hollow and solid concrete blocks.

IS 2116 – 1980 : Specification for sand for masonry mortar

IS 1542 – 1992 : Specification for sand for plaster.

IS 2185 (Part-2)-1983 : Specification for concrete masonry unit-Hollow and solid light weight concrete blocks.

IS 2185 (Part-3)-1984 : Specification for concrete masonry unit - Auto claved Cellular Aerated concrete blocks.

IS 6041 – 1985 : Code of practice for construction of Auto claved Cellular concrete block masonry.

IS 6441 (Part 1 to 9) - 1972 & 1973 : Method of Test for Auto claved Concrete Products.

IS 3068 – 1986 : Specification for broken brick (burnt clay) coarse aggregates for use in lime concrete.

IS 2114 – 2018 : Code of practice for laying in-situ terrazo floor finish.

IS 460 (Part 1 to 3)-2020 : Specification for Test Sieves.

IS 1237 – 2012 : Specification for cement concrete flooring tiles.

IS 777 – 1988 : Specification for glazed earthen ware wall tiles.

IS 1129 – 1972 : Recommendation for dressing of natural building stone.

IS 1130 – 1969 : Specification for Marble (blocks, slabs and tiles).

IS 809 – 1992 : Specification for rubber flooring materials for general purposes.

© 2024 MECON Limited
All rights reserved

IS 3462 – 1986 : Specification for unbacked flexible PVC flooring.
IS 3461 – 1980 : Specification for PVC asbestos floor tiles
IS 2818 – 1990 : Indian Hessians.
IS 653 – 1992 : Linoleum sheets and tiles.
IS 5389 – 1969 : Code of practice for laying hard wood parquet and wood block flooring.
IS 210 – 2009 : Grey Iron Castings.
IS 2114 – 2018 : Code of practice for laying in-situ terrazzo finish.
IS 1198 – 1982 : Code of practice for laying of linoleum flooring.
IS 1003 (Part-2)-1994 : Specification for timber panelled & glazed shutters, windows and ventilator shutters.
IS 1141 – 1993 : Code of practice for seasoning of timber.
IS 1003 (Part-1) - 2003 : Specification for timber panelled & glazed shutters - Door shutters.
IS 287 – 1993 : Recommendation for maximum permissible moisture content of timber used for different purposes.
IS 2202 (Part-1) - 2023 : Specification for wooden flush door shutters (Solid core type).
IS 2191 (Part-1&2)-2022 : Specification for wooden flush door shutters (cellular and hollow core type).
IS 3087 – 2005 : Specification for wood particle boards (Medium density) for general purposes.
IS 3478 – 1966 : Specification for high density wood particle boards.
IS 3097 – 2006 : Specification for veneered particle boards
IS 303 – 1989 : Specification for plywood for general purposes.
IS 1328 – 1996 : Specification for veneered decorative plywood.
IS 205 – 1992 : Specification for non-ferrous metal butt hinges.
IS 1341 – 2018 : Specification for steel butt hinges.
IS 362 – 1991 : Specification for parliament hinges.
IS 453 – 1993 : Specification for double acting spring hinges.
IS 3818 – 1992 : Specification for continuous (Piano) hinges.
IS 206 –2010 : Specification for Tee and Strap hinges.
IS 281 – 2009 : Specification for mild steel sliding door bolts for use with padlocks.
IS 1019 – 1974 `: Specification for rim latches.
IS 2681 – 1993 `: Specification for non-ferrous metal sliding door bolts for use with padlocks.
IS 204 (Part 1&2)-1991&92 : Specification for tower bolts - Ferrous and Non-ferrous metals.
IS 208 – 2020 : Specification for door handles.
IS 2209 – 1976 : Specification for mortice locks (vertical type).

© 2024 MECON Limited
All rights reserved

IS 6607 – 1972 : Specification for rebated mortice locks (vertical type).
IS 1823 – 1980 : Specification for floor door stoppers.
IS 1837 – 1966 : Specification for fan light pivots.
IS 207 – 1964 : Gate and shutter hooks and eyes.
IS 6343 – 1982 : Specification of door closers (peneumatically regulated) for light door weighing upto 40 Kg.
IS 8756 – 1978 : Specification for ball catches for use in wooden Almirah.
IS 6315 – 1992 : Specification for floor springs (hydraulically regulated) for heavy doors.
IS 7197 – 1974 : Specification for Double action floor spring (without oil check) for heavy doors
IS 364 – 1993 : Specification for fan light catch.
IS 3828 – 1966 : Specification for ventilator chains.
IS 363 – 1993 : Specification for hasp and staples.
IS 9899 – 1981 : Specification for hat, coat and wardrobe hooks.
IS 729 – 2021 : Specification for drawer locks, cup-board locks and box locks.
IS 3564 – 1995 : Specification for door closers (Hydraulically regulated).
IS 4351 – 2003 : Specification for steel door frames.
IS 419 – 2023 : Putty for use on window frames.
IS 5187 – 1972 : Specification for flush bolts.
IS 3847 – 1992 : Specification for mortice night latches.
IS 4621 – 1975 : Specification for indicating bolts.
IS 1038 – 1983 : Specification for steel doors, windows and ventilators.
IS 1977 – 1996 : Structural steel (ordinary quality).
IS 1361 – 1978 : Specification for steel windows for industrial buildings.
IS 7452 – 1990 : Hot rolled steel sections for doors, windows and ventilators.
IS 1948 – 1961 : Specification for aluminium doors, windows and ventilators.
IS 1148 – 2009 : Specification for hot rolled rivet bars for structural purposes.
IS 1949 – 1961 : Specification for aluminium windows for industrial buildings.
IS 204 (Part 1) – 1992 : Specification for tower bolts-non-ferrous metal.
IS 733 – 1983 : Wrought aluminium and aluminium alloy bars, rods and sections (for general engineering purposes).
IS 6248 – 1979 : Specification for metal rolling shutters and rolling grills.

IS 1081 – 1960 : Code of practice for fixing and glazing of metal doors,

© 2024 MECON Limited
All rights reserved

windows and ventilators.

IS 2339 – 2013 : Specification for Aluminium Paint for general purpose in dual containers.
IS 2835 – 1987 : Flat Transparent sheet glass.
IS 5437 – 1994 : Wired and figured glass.
IS 101 (Part 1 to 8) - 1986 to 2023 : Method of sampling and test for paints, varnishes and related products.
IS 2074 – 2023 : Ready mixed paint, air drying, red oxide zink chrome, priming.
IS 5410 – 2013 : Cement paint, colour as required.
IS 427 – 2013 : Distemper, dry, colour as required.
IS 428 – 2013 : Distemper, oil emulsion, colour as required.
IS 348 – 1968 : French polish.
IS 5411 (Part 1&2) - 1972 to 1974 : Plastic emulsion paint.
IS 702 – 2022 : Industrial Bitumen.
IS 73 – 2013 : Paving Bitumen.
IS 217 – 2018 : Cut Back Bitumen.
IS 454 – 1994 : Specification for Digboi type cutback bitumen.
IS 5467 – 1986 : Specification for shellac Wax.
IS 3384 – 1986 : Specification for Bitumen primer for use in water proofing and damp proofing.
IS 290 – 1961 : Specification for Coal Tar Black Paint.
IS 341 – 2016 : Specification for Black Japan, Type A, B & C.
IS 1322 – 1993 : Specification for bitumen felts for water proofing and damp proofing.
IS 218 – 1983 : Specification for creosote oil for use as wood preservative.
IS 3037 – 1986 : Specification for Bitumen mastic for use in water proofing of roofs.
IS 1580 – 1991 : Specification for Bituminous compound for water proofing and caulking purposes.
IS 8542 – 1977 : Specification for polish for wooden furniture paste.
IS 9862 – 2017 : Ready mixed paint, brushing etc.
IS 782 – 1978 : Specification for caulking lead.
IS 405 (Part 1&2) – 1992 : Lead sheet and strips.
IS 5134 – 1977 : Bitumen impregnated paper.
IS 2849 – 1983 : Specification for non load bearing gypsum partition blocks.
IS 8591 – 1980 : Specification for floor polish paste.
IS 2095 – 2023 : Specification for gypsum plaster boards.

© 2024 MECON Limited
All rights reserved

IS 77 – 1976	:	Specification for linseed oil, boiled for paints.
IS 533 – 2007	:	Gum Spirit of turpentine (oil of Turpentine).
IS 1504 – 1996	:	Bees Wax.
IS 3536 – 2016	:	Ready mixed paint, brushing, wood primer pink.

© 2024 MECON Limited
All rights reserved

IS 8273 – 1984 : Specification for gypsum plaster for use in the manufacture of fibrous plaster board.
IS 5871 – 1987 : Specification for bitumen mastic for tanking and damp proofing.
IS 651 – 2007 : Specification for salt glazed stoneware pipe and fittings.
IS 1729 – 2023 : Sand cast iron spigot and socket soil pipe.
IS 771 (Part 1 to 7) - 1979 to 1985 : Specification for glazed fire clay appliances.
IS 1230 – 2007 : Cast iron rain water pipes and fittings.
IS 774 – 2021 : Flushing cisterns for water closets and urinals.
IS 2548 (Part 1&2) – 1996 : Specification for plastic seats and cover for water closet.
IS 1726 – 1991 : Specification for cast iron manhole cover and frames.
IS 1239 (Part 1&2)-2004 to 2011 : Mild steel Tubes and fittings.
IS 4984 – 2016 : Specification for high density polyethylene Pipes for potable water supplies: Sewerage and industrial effluents.
IS 2556 (Part 1 to 15) - 1995 to 2021 : Specification for vitreous sanitary appliances (vitreous china).
IS 7328 – 2020 : High density polyethylene materials.
IS 4985 – 2021 : Specification for unplasticised PVC pipes for potable water supplies.
IS 3076 – 2012 : Specification for low density polyethylene pipe for potable water supplies.
IS 9762 – 1994 : Specification for polyethylene floats for ball valve.
IS 3395 – 1997 : Code of practice for fire safety of industrial buildings.
IS 7834 (Part 1 to 8) – 1987 : Specification for injection moulded PVC fittings with solvent cement joint for water supplies.
IS 8008 (Part 1 to 7) – 2003 : Specification for injection moulded HDPE fittings for potable water supplies.
IS 8360 (Part 1 to 3) - 1977 : Specification for fabricated high density polyethylene fittings for potable water.
IS 784 – 2019 : Specification for prestressed concrete pipe.
IS 1703 – 2000 : Specification for copper alloy float valves (horizontal plunger type) for water supply fittings.
IS 12234- 2021 : Specification for plastic equilibrium float valve for cold water services.
IS 778 – 1984 : Specification for copper alloy gate, globe and check valves for water works purposes.

© 2024 MECON Limited
All rights reserved

IS 1536 – 2023 : Centrifugally cast (spun) iron pressure pipes.
IS 1537 – 1976 : Vertically cast iron pressure pipes for water, gas and sewage.
IS 1538 (Part 1 to 23) – 1993 : Sand cast iron spigot and socket soil, waste and ventilating pipes, fittings and accessories.
IS 3589 – 2001 : Electrically welded steel pipes for water, gas and sewage.
IS 781 – 1984 : Specification for cast copper alloy screw down bib taps and stop valves for water services.
IS 1239 (Part 1&2) - 2004 & 2011 : Mild steel tubes and fittings.
IS 779 – 1994 : Specification for water meters.
IS 1795 – 1982 : Specification for pillar taps for water supply purposes.
IS 1363 (Part 1 to 3) – 2018 & 2023 : Dimensions for screw thread run-outs and undercuts.
IS 2016 – 1967 : Plain washers.
IS 638 – 1979 : Sheet rubber jointing and rubber insertion jointing.
IS 4127 – 2023 : Code of practice for laying of glazed stoneware pipes.
IS 458 – 2021 : Specification for precast concrete pipes.
IRC 19 – 2005 : Standard specification and code of practice for water Bound macadam.
IRC 29 – 1988 : Tentative specification for 4 cm Asphaltic concrete surface course.
IRC 15 – 2017 : Standard specification and code of practice for construction of concrete roads.
IS 6313 – 1981 & 2022 : Code of practice for antitermite measures in building.
IS 1054 – 1962 : Dieldrin emulsifiable concentrates.
IS 1308 – 1994 : Aldrin dusting powders.
IS 6439 – 1978 : Hepta chlor emulsifiable concentrates.
IS 2632 – 2023 : Crotonaldehyde.
IS 1791 – 2020 : Specification for batch type concrete mixers.
IS 10262- 2019 : Recommended guidelines for concrete mix design.
IS 7861 (Part 1) – 1975 : Code of practice for extreme weather concreting - Recommended practice for hot weather concreting.

© 2024 MECON Limited
All rights reserved

IS 1199 – 1959	:	Methods of sampling and analysis for concrete.
IS 516 – 1999	:	Method of test for strength of concrete.
IS 7861 (Part 2) – 1981	:	Code of practice for extreme weather concreting. Recommended practice for cold weather concreting.
IS 2502 – 1963	:	Code of practice for bending and fixing of bars for concrete reinforcement.
IS 2751 – 1979	:	Recommended practice for welding of mild steel plain and deformed bars for reinforced construction.
IS 800 – 2007	:	Code of practice for general construction in steel and deformed bars.
IS 816 – 1969	:	Code of practice for use of metal arc welding.
IS 814 – 2004	:	Covered electrodes for manual metal arc.
IS 3370 (Part 1&2)-2021	:	Code of practice for concrete structures for the storage of liquids.
IS 2911 (Part 1 to 4) – 2010 to 2021	:	Code of practice for design and construction of pile foundations.
IS 1343 – 2012	:	Code of practice for prestressed concrete.
IS 1785 (Part 1&2)-1983	:	Specification for plane hard drawn steel wires for prestressed concrete.
IS 2250 – 1981	:	Code of practice for preparation and use of masonry mortars.
IS 1635 – 1992:	:	Code of practice for field slaking of building lime.
IS 2212 – 1991	:	Code of practice for brick work.
IS 1597 (Part 1&2)-1992	:	Code of practice for construction of stone masonry.
IS 4101 (Part 1 to 3) - 1967 to 1985	:	Code of practice for external facing and veneer.
IS 737 – 2008	:	Wrought aluminium and aluminium alloys, sheet and strips (for general engineering purposes).
IS 2572 – 2005	:	Code of practice for construction of hollow connect block masonry.
IS 1661 – 1972	:	Code of practice for application of cement finishes.
IS 5766 – 1970	:	Code of practice for laying of burnt clay brick flooring.
IS 5491 – 1969	:	Code of practice for laying of in-situ granolithic concrete flooring topping.

© 2024 MECON Limited
All rights reserved

IS 3316 – 1974	:	Specification for structural granite.
IS 1196 – 2023	:	Code of practice for laying bitumen mastic flooring.
IS 1195 – 2002	:	Specification for bitumen mastic for flooring.
IS 3462 – 1986	:	Specification for unbacked flexible PVC flooring.
IS 1198 – 1982	:	Code of practice for laying fixing and maintenance of linoleum floor.
IS 848 – 2006	:	Specification for synthetic resin adhesive for plywood.
IS 4457 – 2007	:	Specification for ceramic unglazed vitreous acid resisting tiles.
IS 851 – 1978	:	Specification for synthetic resin adhesive for construction work (non structural) for wood.
IS 2202 (Part 1&2) - 2022 & 2023	:	Specification for wooden flush door shutters.
IS 102 – 1962	:	Ready mixed paint.
IS 1081 – 1960	:	Code of practice for fixing and glazing of metal doors.
IS 6248 – 1979	:	Specification for metal rolling shutters and rolling grills.
IS 1868 – 1996	:	Anodic coatings on aluminium and its alloys.
IS 2065 – 1983	:	Code of practice for water supply in buildings.
IS 2064 – 1993	:	Code of practice for selection, installation and maintenance of sanitary appliances.
IS 7634 (Part 1 to 3) – 1975, 2003 &2012	:	Code of practice for plastic pipes.
IS 1742 – 1983	:	Code of practice for building drainage.
IS 5330 – 1984	:	Criteria for design of anchor blocks for penstocks with expansion joints.
IS 3114 – 1994	:	Code of practice for laying of cast iron pipes.
IS 783 – 1985	:	Code of practice for laying of concrete pipes.
IRC-SP11- 1984	:	Hand book of quality control for construction of roads and run- ways.
IRC-63 – 1976	:	Tentative guidelines for use of low grade aggregates and soil aggregate mixtures in road pavement construction.
IRC-60 – 1976	:	Tentative guidelines for use of Lime Fly Ash Concrete as pavement base or sub-base.
IRC-74 – 1979	:	Tentative guidelines for use of Lean Cement Concrete and lean concrete Fly Ash Concrete as pavement base or sub-base.

© 2024 MECON Limited
All rights reserved

IS 6509 – 1985	:	Code of practice for installation of joints in concrete pavement.
IS 1838 (Part 1) – 1983	:	Specification for performed filler for expansion joint in concrete pavements and structures.
IRC-43 – 2015	:	Recommended practice for Tools, Equipment and appliances for concrete pavement construction.
IRC-15 – 2017	:	Standard specifications and code of practice for construction of concrete road.
IS 3036 – 2022	:	Code of practice for laying lime concrete for a water proofed roof finish.
IS 1346 – 1991	:	Code of practice for water proofing of roofs with bitumen felts.
IS 1609 – 1991	:	Code of practice for laying damp proofing treatment using bitumen felt.
IS 4365 – 1967	:	Code of practice for application of bitumen mastic for waterproofing of roofs.
IS 9103 – 1999	:	Specification for admixtures for concrete.
IS 2645 – 2003	:	Specification for integral cement water proofing compounds.
IS 1834 – 1984	:	Specification for hot applied sealing compound for joint in concrete.
IS 278 – 2009	:	Specification for Galvanized barbed wire for fencing.
IS 2721 – 2003	:	Specification for Galvanized steel chain link fabric.
IS 280 – 2006	:	Specification for Mild steel wire.
IS 4826 – 2023	:	Specification for hot dipped galvanized coating on round steel wires.
IS 1200 (Part 1 to 28) - 1973 to 2013	:	Method of measurement of building and Civil Engineering Works.
IS 4081 – 2013	:	Safety code for blasting.
IS 5916 – 2013	:	Specification for cast iron gratings for drainage purposes.
IS 4130 – 1991	:	Safety Code for demolition of building.
IS 3764 – 1992	:	Safety code for excavation work.
IS 5121 – 2013	:	Safety code for piling.
IS 4014 (Part 2) – 2013	:	Code of practice for steel tubular scaffolding.
IS 3696 (Part 1&2) - 1987 to 1991	:	Safety code of scaffolds and ladders.
IS 6922 – 1973	:	Criteria for safety and design of structures subject to underground blast.

© 2024 MECON Limited
All rights reserved

IS 5499 – 1969	:	Code of practice for construction of underground raid shelter.
IS 4138 – 1977	:	Safety code for working in compressed air.
IS 7293 – 1974	:	Safety code for working with construction machinery.
IS 8989 – 1978	:	Safety code for erection of concrete framed structures.
IS 4756 – 1978	:	Safety code for Tunneling work.
IS 7205 – 1974	:	Safety code for erection of structural steel works.

© 2024 MECON Limited
All rights reserved

Rev-0

TECHNICAL SPECIFICATION
FOR
BORED CAST IN-SITU PILES

SPECIFICATION NO.: MEC/05/22/TS/C/08

PREPARED AND ISSUED BY

(CIVIL & STRUCTURAL SECTION)
MECON LIMITED
(A Govt. of India Undertaking)

MECON Limited, 13th& 15th Floor,
North Tower, SCOPE MINAR,
Laxmi Nagar District Centre, Delhi-110092 (India)

1.0 GENERAL

This specification covers the piling work required for the construction. The contractor shall be deemed to have visited & carefully examined the site & surrounding, to have satisfied him about the nature of existing terrain, existing underground services, general site condition etc. and all other matters affecting the work. Claims and objections due to ignorance of site condition shall not be considered after submission of tender.

End bearing piles may be provided as per soil report and site requirement if any. Soil characteristic shall be verified at individual locations by detailed soil investigation, if required.

The Termination criteria & Vertical Compressive Capacity of piles shall be maintained as per soil characteristic along the route. No change / modification shall be entertained at any stage. However length of pile at a particular location will depend on level of top of rock stratum/stiff soil at that location. For any particular location, if the contractor feels any insufficiency of data pertaining to the soil, they shall conduct geotechnical investigation, as per requirement, at no extra time & cost to IGGL.

The capacity of piles shall be confirmed by the executing agency by Load Test on Initial Trial Piles & Routine Load test on working piles as per clause No. 9, IS: 14593: 1998 - Indian Standard code on “Design & Construction of Bored Cast-in-situ Piles Founded on Rocks - Guidelines” or as per IS :2911 (Part IV) for stiff soil condition.

2.0 CODES

Any Standards / Codes mentioned in this specification means the latest revision of it including its all amendments, if any.

IS:2911 (Part 1/Section 2)-1979 : ‘Code of practice for design & construction of Bored Cast- in- Situ concrete piles’, IS : 2911 (part 4) -1985 ‘Load Test on Piles & IS : 14593 : 1998 : ‘Design And Construction of Bored Cast-in-situ Piles founded on Rocks – Guidelines’ shall be referred to in conjunction with this specification during the entire design, construction & Load Testing work. These codes form the integral part of this specification.

If for any material or workmanship, appropriate Indian Standards or Codes are not available or have not been adequately specified in the Technical Specification, such materials & workmanship shall conform to other suitable Standard & Codes as may be approved by client.

In case of any conflict between the requirement of this specification & those of the referred codes / standards, the former shall govern.

Any special requirements as shown or noted on the project drawings shall govern over this specification.

3.0 DESIGN

The piles shall be bored cast-in-situ cylindrical type RCC piles terminated within underlying original rock layer (below virgin soil) with a rock- socket length not less than 3D (where D is the diameter of the pile) or in stiff soil as per for length of fixity as per IS :2911 (Part I/SEC 2), to achieve the design capacity. Minimum center to center spacing between adjacent piles shall be 2.5 D.

The contractor shall submit the structural design and drawing of pile for approval of IGGL/MECON.

4.0 PERMANENT LINER

For Piles of 400 mm diameter, no permanent liner is required. Only temporary casing shall be used.

5.0 MATERIALS

All the materials proposed to be used, shall be free from any objectionable substances, shall confirm the following stipulation & shall be approved by client. Any testing required proving the suitability of such materials shall be carried out by the contractor at his own cost & in presence of client representative. Any material rejected by client shall be immediately removed from the site.

5.1 Reinforcement steel shall conform to High yield strength deformed bars of grade Fe 415/Fe-500D as per IS: 1786- For marine / coastal / corrosive surroundings, corrosion resistant bars shall be used as directed by EIC. Test certificate for reinforcement steel shall be obtained from recognized agency, before using. If the steel is purchased by the contractor, client may desire to check the testing of the same and the contractor shall arrange it in an approved laboratory at his own cost.

Reinforcement shall be provided for full depth of pile as furnished in the approved drawing.

5.2 Reinforced Cement Concrete for Piles shall be of Grade M-25 with minimum Cement content of 400 Kg/m^3 and using 20 mm & down graded stone aggregates. The slump of

concrete shall range between 150 mm to 180 mm. The water-cement ratio shall not exceed 0.5. To achieve the specified slump using specified water cement ratio without compromising with strength, suitable plasticizer, if required, may be used at no extra cost, subject to approval of client. If concentration of Sulphate (measured as SO_3) exceeds 0.5% in soil or 1200 ppm in ground water, sulphate resisting cement shall be used.

5.3 The cement shall be Ordinary Portland Cement conforming to IS: 269-1989 or Portland Pozzolana Cement conforming to IS: 1498-1991 or Blast Furnace Slag Cement conforming to IS: 455-1989. Each batch of cement supply shall be accompanied by valid manufacturer's certificate.

5.4 The physical properties, mechanical properties & gradation of coarse & fine aggregate shall follow IS: 383-1970. Testing of aggregate properties (if desired by CLIENT) shall follow relevant parts of IS: 2386:1963.

5.5 Water used for concrete shall be clean & free from injurious amount of harmful substances in such amounts that may impair the strength & durability of pile concrete. Generally potable water shall be considered satisfactory. In case of any doubt felt by CLIENT about the quality of water, contractor has to prove that the concrete prepared with proposed water shall not have a compressive strength lower than 95% of the strength of similar concrete prepared with distilled water.

5.6 Preliminary mix design shall be done in accordance with IS: 10262-1982 & SP: 23 subject to approval of the customer. Cube tests, slump test & other relevant tests for preliminary mix design and Routine cube test, slump test for regular concreting shall be carried out at site / approved laboratory at contractor's own cost. Concrete cube tests shall be done as per IS: 516-1959. The calibration certificate (not older than one year) of the testing machine shall be available at site. If client feels any doubt about the calibration, the contractor has to check the same at an approved laboratory at his own cost. All such tests shall be conducted in presence of client. At least one set (3 cubes for 7 days & 3 cubes for 28 days strength) of cube shall be tested for every 10 piles or at any deterioration in concrete quality if felt by CLIENT, whichever occurs earlier. Slump tests (apparatus conforming to IS: 7320-1974) shall be carried out at least once for each pile or more frequently, if desired by client.

6.0 EQUIPMENT & ACCESSORIES

The equipment & accessories should be compatible with the type of deposit, method of installation, type of founding strata & required penetration in the founding strata.

The capacity of rig shall be adequate so as to bore upto required depth. Rig shall be equipped with suitable Chisel &/or Bailer capable to penetrate through any Local Obstruction / Hard strata.

In case, pile is required to be socketted in any type of rock strata, the equipment shall be capable to do so upto required socket length at required depth.

No excuses, whatsoever, in relation to the inability of equipment shall be entertained during execution of work.
Contractor must furnish a detailed list of equipment & accessories (in sufficient quantities to complete the job within scheduled time frame & as per specification) to be deployed by him for this job indicating quantity, type, capacity/dimension & model/make of each along with his offer & reconfirm the same in writing immediately after mobilization to site.

7.0 CONSTRUCTION

7.1 Piles shall be installed as accurately as possible as per drawing. Permissible positional deviation shall be as per clause 7.1. 2, IS: 2911 (part 1/sec 2).

7.2 Boring in soft material liable to cavitation, boring tools shall not be operated at a level below the toe of the casing. The Care shall be taken to ensure that the volume of water added to the bore shall be no more than the minimum necessary for the operation of the boring tools. The casing shall be driven down through the soft material to penetrate a hard stratum not subjected to cavitation and shall be sealed in this material as far as possible. Thereafter the boring shall be continued by means of boring tools until the approved bearing layer is reached.

At the last stage of boring or in intermediate hard layers chisel or chopper may be used. The rate for piling work should be inclusive of any chiseling, chopping of hard strata, clearing of bottom of pile bore hole etc. complete as per specifications. The piles shall be installed with due consideration for safety of adjacent structures by a method which leaves their strength unimpaired and which develops and retains the required bearing resistance.

7.3 In green-field areas of the site, piling is to be started right from virgin soil deposit; pile boring may be done either by Bailer / Chisel method or by rotary boring with mud circulation process. In rotary boring method, stabilization of the side of borehole can be done by the use of Bentonite slurry. Either, Direct Mud Circulation (DMC) or Reverse Mud Circulation (RMC) process shall be adopted depending on soil condition & pile dimension. In such

cases, the Bentonite slurry must be used at least from the level of sub-soil water, & the hole should then be always kept almost full with the fluid. The specific gravity of Bentonite slurry shall be in the range of 1.05 to 1.10. This shall be checked regularly at an interval of 10 piles or at any change in its specified quality if felt by the purchaser, whichever occurs earlier. Pressure of slurry pump shall be sufficient enough to clear out all cuttings efficiently from the hole.

7.4 Reinforcement as required shall be made into stiff cages sufficiently welded to withstand handling without any damage or distortion. Reinforcement shall be placed immediately after cleaning and inspection of the bottom of bore holes. The reinforcement should be supported away from the sides of the shaft by means of suitable space block to ensure concentric alignment in the shaft. Steps shall be taken to ensure correct positioning during concreting of reinforcement in the piles without any distortion. The clear cover to main reinforcement shall not be less than 50 mm.

7.5 Immediately before placing of reinforcement and concreting, the bored hole shall be cleaned of all the loose material, debris and all the water shall be removed. The pile tip zone shall be thoroughly cleaned by flushing the bore with fresh Bentonite slurry to completely replace the old Bentonite slurry used during the previous operations. This shall be carried out for 45 minutes in two stages. Cleaning for initial 30 minutes shall be done before lowering of reinforcement cage & final 15 minutes after lowering the reinforcement cage.

7.6 Concrete shall be so placed as to fill the entire volume of the tube or bore without the formation of voids caused by the faulty consolidation or entrapped air. Proper care shall be taken to ensure that the fluid alluvial soil does not penetrate between batches of the concrete.

In case of bore holes stabilized by Bentonite slurry, concrete shall be placed by means of tremie pipe which will be suitably closed at bottom at the start of concreting. The tremie pipe must extend upto the bottom of the borehole at the start and may be withdrawn in sections as the level of concrete rises in the borehole; but its discharge end shall at all times be embedded in the concrete to a minimum depth of 500 mm. Placing of concrete should be continuous and the pile holes will be maintained full with the Bentonite slurry where used throughout the concreting operation. Slurry displaced from the borehole by the concrete shall be channeled away or pumped into suitable receptacles for re-use or disposal to waste.

In case of cased holes, after the required founding level is encountered, the bottom shall be sealed with concrete and the reinforcement cage shall be lowered. If the borehole is dry, concrete shall be deposited in such a manner so as to avoid any segregation of concrete followed by gradual withdrawal of casings. If water is present in the borehole, it shall be bailed out by bailer. If it is difficult to dewater by the bailer, concrete shall be placed under water by means of a placer. After the head of water has been neutralized by the head of the concrete, excess water shall be bailed out and concrete shall then be deposited by direct pouring from the top, as is done, if the borehole is dry.

7.7 Concreting of Pile shall continue until the Pile is fully formed upto a level of not less than 750 mm above cut-off level of piles. Extraction of casing wherever used, shall be done in such a way so that no necking or shearing of concrete in the shaft takes place. Pile length above cut-off level shall not be paid & shall be trimmed of free of cost. Trimming of Pile top shall not be permitted before 7 days of concreting in case of mechanical chipping & not before 3 days concreting in case of manual chipping.

7.8 The concreted length of piles shall be measured from the toe of pile to cutoff level of pile.

7.9 Temporary stoppage of work may be permitted only during boring stage. Thereafter right from boring or chiseling of final portion of pile length through subsequent activities of flushing, lowering of reinforcement cage, lowering of tremie, pre-concrete flushing & upto concreting of full pile length, no halt whatsoever in the execution of work shall be permitted.

7.10 Boring of any pile shall not be carried out within a clear distance of three times of the pile diameter from the adjacent pile which has been freshly concreted within past 24 hours.

7.11 The contractor shall take all necessary actions to prevent side collapse (if any) of pile bore at his own cost.

7.12 Concreting of Pile shall continue until the Pile is fully formed upto a level of not less than 750 mm above cut off level of piles. Extraction of casing wherever used shall be done in such a way that no necking or shearing of the concrete in the shaft takes place. Pile length above cut off level shall not be measured for payment and shall be trimmed off free of cost. Trimming of pile top shall not be permitted before 7 days of concreting.

7.13 The Contractor shall be responsible for the prompt removal from the site of all spoil due to the boring to places as indicated by client. The cost of such disposal shall be deemed to have been included in the rate of piling.

8.0 FOUNDING STRATA

All the piles shall be founded on approved bearing strata or upto specified depth as per design requirement & as mentioned in the drawing.

In general, criteria for approval of founding strata shall be agreed between client & contractor based on visual identification of recognizable samples recovered from pile borehole & specified SPT criteria.

In case, pile is socketted in rock strata, a minimum socketted length of Thrice the pile diameter (3D) shall be provided. The founding rock strata shall be identified by recognizable rock piece sample obtained by boring tool from pile bore &/or wash of rock powder in return water, SPT N > 100 at termination level and as decided by CLIENT. In stiff soil pile shall be imbedded for length of fixity as per IS :2911 (Part I/SEC 2), to achieve the design capacity.

Termination criteria may be standardized / modified at site by CLIENT depending on actual sub-surface material encountered and rate of penetration through such strata with the available equipment & accessories.

9.0 PILE LOAD TEST

9.1 Immediately on mobilization to site the contractor shall arrange to construct Initial Test Piles with a view to establish suitability, installation criteria, safe load bearing capacity & guidelines for acceptance of routine tests. Initial tests shall separately be conducted for Vertical Compressive, Vertical Pull-out & Lateral load in non-working piles as shown in the project drawing. Maximum load to be applied for such tests shall be 2.5 times of the corresponding safe design loads.

These Initial Test piles shall be constructed using same equipment & technique as for working piles.

While executing the pile bore for Test Piles a continuous record of bore log shall be maintained and Standard Penetration Test as per IS:2131-1981 at an depth interval of 1.5 m including one compulsory test at termination level, shall be conducted at no extra cost.

9.2 Generally 1% of total number of working piles shall be tested for Routine Test. However exact number & location of the same shall be indicated by CLIENT at site. Maximum load in such tests may be limited to 1.5 times of the corresponding safe design load.

9.3 For all types (Initial / Routine & Vertical Compressive / Vertical Pull-out / Lateral) of load test the testing arrangement, procedure shall follow relevant criteria set out in IS: 2911(part 4) - 1985 along with the following stipulations:

i) All the tests shall be carried out in presence of client.

ii) Load test shall be carried out after 28 days from the date of casting.

iii) Test load shall be applied at cut-off level. If the test level is below the ground water table, suitable arrangement for dewatering shall be made by the contractor without any extra cost so as to conduct the test at dry condition.

iv) Loading shall be applied by reaction method consisting of a hydraulic jack placed centrally against a suitable loaded platform / anchorage system. Reaction system shall be well designed & capable of taking 1.25 times of the maximum load to be applied. It is the responsibility of the contractor to ensure the required capacity of the reaction system.

v) Test load shall be applied to pile in a static manner. Stage loading shall be applied in equal increments of 20% of estimated safe design load. Unloading may be done in higher decrements with at least 5 stages. For Cyclic Load test, each stage of loading shall correspond to unloading upto zero loads. At each stage of loading & unloading, deflection of pile top shall be recorded accurate to 0.02 mm at an interval of 1, 2, 4, 8, 15, 30, 60 & 120 minutes upto a time when the deflection rate reduces to 0.1mm in 30 minutes or 0.2 mm in one hour or till two hours whichever occurs earlier.

vi) Increments of loads shall be continued upto Maximum Load (2.5 times of safe design load for Initial Test & 1.5 times of safe design load for Routine Test) or failure (soil-pile yielding or structural failure) whichever occurs earlier.

vii) Where failure does not occur, the final test load shall be maintained for 24 hours and deflection records shall be taken at every 6 hours interval, including initial 2 hours detailed records, as mentioned earlier.

viii) Assessment of Safe Load for different types of load test of pile socketted in rock, shall follow clause No. 9 of IS: 14593: 1998.

ix) The contractor shall ensure that all the instrument / apparatus used by him shall be properly calibrated. The calibration certificates (not older than one year) of all the dial gauges & pressure gauges proposed to be used for load test shall be available at site. If

client desires to check any calibration, the contractor has to arrange the same in an approved laboratory at his own cost.

x) The Contractor shall maintain & submit CLIENT immediately after completion of any load test, the following records / reports:

a) Tabular & Graphical representation of Load vs. Settlement during loading and unloading.

b) Tabular & Graphical representation of the Time vs. Settlement for each load.

c) Graphical analysis of initial cyclic load test results (if any) to separate skin friction & end – bearing, as per Annexure A, IS 2911 (part 4).

d) Remarks concerning any unusual occurrence (if any) during boring, installation or testing of piles.

9.4 In case of failure of piles to achieve the specified safe design load in load test, the contractor shall install extra piles at his own cost as per design requirement & as instructed by client.

10.0 STANDARD OF ACCEPTANCE

The piles shall be accepted as satisfactory only when the work has been executed in accordance with this specification, IS Codes, and the Standards stated hereinafter and instructions given by client at site from time to time:

a) The total volume of concrete shall not be less than actual shaft volume. The calculated volume for this purpose shall be the cross sectional area inside the bore multiplied by the length of the shaft. The concrete shall show the specified strength as indicated by the cube test results. The payment shall be made for theoretical volume of concrete in case of excess pour.

b) The toe of pile shall be at approved bearing level in each case.

c) Safe Load carrying capacity of pile as obtained from Load test shall not be less than corresponding Safe Design Load as mentioned.

d) Tolerances specified in clause No. 02.05.01 shall be satisfied.

If an individual pile fails to meet the requirements specified in any of above clause/s, such pile shall be deemed to be defective.

When any pile is found defective, one or more pile shall be installed as a replacement of defective pile as necessary without any extra cost to client. Defective piles shall be left in place or pulled out as directed by client. Contractor shall not be paid any additional amount on this account. No payment shall be made for test piles found defective / unsatisfactory.

11.0 RECORD

The contractor shall maintain a record for each pile indicating the following data and shall be signed jointly with client.

a) The date and time of commencement and completion of each stage of piling operation.

b) The particulars of the equipment and method of boring and concreting.

c) The location and type of pile, Pile number, with a reference to approved drawings.

d) The diameter of the pile and verticality.

e) Bored depth, concreted depth, empty boring and nature of stratum at founding Level.

f) The volume of concrete poured, quantity of cement, w/c ratio used and slump of poured concrete.

g) Details of reinforcement provided.

h) The sequence of installation of pile groups.

i) During boring operation, a separate record for rate of advancement of borehole in terms of effective time vs. boring depth shall be maintained for each pile. The effective time implies the time required exclusively for boring operation barring the time for other activities such as temporary stoppage, cleaning of hole, in-situ tests, if taken etc.

j) During chiseling through weathered rock strata, exact record for depth of penetration against time & number of blows for each 10 cm of chiseling shall be maintained. Weight & average height of fall of chisel shall also be recorded.

TECHNICAL SPECIFICATION FOR TOPOGRAPHICAL SURVEY AND GEO-TECHNICAL INVESTIGATIONS FOR TERMINALS AND SV'S

TOPOGRAPHIC SURVEY & SOIL INVESTIGATION

01.0 GENERAL

M/s Indradhanush Gas Grid Limited (IGGL), a Joint Venture of IOCL, ONGC, GAIL, OIL and NRL, is in the process of implementing the North East Gas Grid (NEGG) with a vision to connect all the eight (08) north eastern state capitals and major consumption centers in the region.
The NEGG will be connected to National gas grid at Guwahati through Barauni Guwahati pipeline (already under execution by M/s IGGL).

M/s IGGL has awarded M/s MECON Limited Project Management Consultancy (PMC) services for DULIAJAN FEEDER LINE

01.01 This Technical Specification deals with the Topographical and Geo-technical Survey work for development of Terminals /SV Stations for above Gas pipe line.
The plan for Topographical and Geo-technical Survey is drawn with a view to obtain sufficient data regarding the engineering properties of soil supporting the foundation for buildings, equipment and structures; and to plan the various facilities.

PART-A

TECHNICAL SPECIFICATION FOR GEO-TECHNICAL INVESTIGATION

02.0 SCOPE OF WORK

02.01 Soil Investigation

The scope of services of the contractor for undertaking soil investigation work shall cover all the work connected with soil exploration program at the proposed Terminal/SV plots including the setting out of locations of the various exploration points from reference point, conducting all field investigations at site, collection of soil and water samples, field and laboratory tests and submission of final report in 4 (Four) copies.

All field investigation, laboratory tests and reports etc. shall be done in accordance with the latest relevant Indian Standard Codes.

03.0 TECHNICAL SPECIFICATIONS OF WORK

The details to be covered in the contract work shall include the following :

03.01 Soil Investigation Work on Soil

03.01.01 Field Investigation and Test

This specification deals with Field Investigation/ tests and laboratory tests involved in ascertaining soil stratification & engineering properties of the soil at proposed project site.

The field investigations/ tests comprise of the following:-

Exploratory Bore Holes

There shall be One / two boreholes at specified Terminal /SV plot. The location of these shall be indicated by IGGL/MECON before commencement of field activities. The location and number of these bore holes can be altered at site, if found necessary by IGGL/MECON. All bore holes shall be of 150 mm diameter and shall be sunk into soil to a depth of 10m or upto refusal strata, whichever is earlier.

The exploratory work at site shall be carried out by using shell and auger equipment.

Disturbed samples for boring shall be collected every 1.5m or change in stratum and representative samples placed systematically for proper logging of the strata. The existing ground level shall be marked in terms of RL. Proper logging shall be done with description of different strata encountered with their reduced levels. All boreholes after completion of work shall immediately be filled in with a mixture of bentonite slurry and clay-sand mixture.

Undisturbed Sampling

In cohesive and semi-cohesive soils, undisturbed samples conforming to IS:2132 shall be taken using open tube samples with an area ratio of less than 15% so as to obtain a core of samples of 100mm diameters and 450mm long at every change in stratum or at intervals of 1.5m whichever is less. The tubes shall be marked and the ends of the sample tube shall be sealed properly with wax of thickness not less than 25mm and capped properly immediately after the sample is recovered from the boreholes to ensure no loss of moisture with time while retained in the tube. Sample tubes shall be immediately shifted to the laboratory for testing.

Standard Penetration Test (SPT)

The S.P.T. shall be performed at the base of boreholes as per IS:2131 with the first test at a depth of 0.5 m and thereafter at every change in stratum or at intervals of 1.5 metre whichever is less in both cohesive and non-cohesive soil. The S.P.T. shall also be conducted at termination depth of Borehole. Test may also be required to be carried out in compact sand which in normal terminology will be refusal strata. No. of blows required to penetrate every 150mm shall be recorded in case of normal sand, silt or clay as per IS:2131. In case of dense/ hard stratum, the penetration (in mm) for every 20 blows per test shall be recorded. All these field records are to be submitted along with bore logs.

Bent rods and damaged/ defective nipples shall not be used for the test and shall be replaced immediately by proper ones. Centering spacers shall be used at every 6 meters or at smaller intervals in depths to reduce the effect of whipping of rods. Samples collected in process of conducting S.P.T. shall be preserved as disturbed sample. Graphs shall be drawn for

each penetration test. Collection of undisturbed samples and conducting S.P.T. tests will be done alternatively.

Disturbed Samples

Representative disturbed samples obtained from boring at every 1.5 metre interval in depth or change in stratum shall be placed in suitable jars labeled properly for onward transmission to the laboratory. These samples shall be sent to the laboratory immediately after the boring is complete. All S.P.T. samples shall also be similarly preserved.

Standing Ground Water Level

Records shall be maintained of the level at which water is struck and the level of any rapid in flow shall also be recorded. On reaching such level the borehole shall be left open for a period of two hours to observe the rise of water in the casing. Boreholes can be continued thereafter, upto the end of the day. The level of the water in the casing at the end of the day and at the beginning of the next day shall be recorded properly. For studying the ground water table no drilling mud will be permitted for stabilising the hole.

03.01.02 Laboratory Tests on soil

Laboratory tests shall be conducted on selected samples collected from site to establish the physical and chemical properties of soil. Following tests shall be done as appropriate in accordance with latest relevant Indian code of Practice.

i) Natural moisture content
ii) Void ratio
iii) Liquid plastic and shrinkage limits
iv) Specific gravity

v) Dry density and bulk density
vi) Direct Shear test
vii) Consolidation/ swelling test
viii) Particle size analysis
ix) Triaxial test (undrained quick test)
x) Test on core samples
xi) Chemical properties of the soil & sub-soil water
xii) CBR test

Atterberg Limits

Liquid and plastic limit tests shall be conducted on all cohesive soils for classification purposes and for predicting engineering properties. The results of limit tests shall be plotted on the plasticity chart of A. Cassagrande.Shrinkage limit shall also be determined for a few soil samples.

Particle Size Analysis

Particle size analysis shall be done on all clayey and sandy samples. Both sieve and hydrometric analysis shall be conducted and gradation curves shall be plotted to show the particle size distribution.

Shear Tests

Shear tests shall be conducted on the undisturbed samples. A few unconfined compression tests shall be conducted on clayey samples but the majority of clayey samples in undrained condition shall be subjected to triaxial tests. The cohesion values and angle of internal friction are to be determined either by Mohr's circle or by any other method.

Particular attention shall be paid for conducting triaxial tests, each of which shall be done on a minimum of 3 specimens. Specimens shall be prepared by trimming and not by pushing small tube in a large tube.

Consolidation Tests

A few consolidation tests shall be carried out on undisturbed samples of clayey soil, to estimate the settlement of foundation from "e-log p" curves,

compression index - Cc and co-efficient of consolidation – Cu. Consolidation test shall be done in manner that will not allow the sample to swell.

Swelling Test

For soils of expansive nature, swelling tests on a few samples shall be selected for conducting swelling test to determine swelling pressure and magnitude.

Specific Gravity and Bulk Density

These shall be determined as per the standard procedures.

Chemical Analysis of Soil and Sub-soil Water Samples

Water samples from a few bore holes shall be taken and chemical analysis shall be done for sulphate, chloride content and pH value, particularly to determine the aggressiveness to concrete, steel and GI pipes. Care shall be taken to ensure that they are not diluted with rain or surface water during recovery from the boreholes. Similarly, a few soil samples shall be chemically tested to determine the sulphate contents, chloride content and pH values and other aggressive components as per IS - 2720.

4.0 GEOTEHNICAL INVESTIGATION ON ROCK

This specification also deals with Field Investigation/ tests and laboratory tests involved in ascertaining soil stratification & engineering properties of the rock at proposed project site.

The field investigations/ tests comprise of the following:-

04.01 Boring in rock-

Rock core drilling may be resorted to when refusal to SPT (N > 100) (with hammer rebound), along with geological identification of rock fabric / texture, in SPT sample &/or disturbed sample, is observed. Identification of rock stratum shall be certified by qualified geologist. If chiselling has to

be carried out for breaking local obstruction such as boulder etc., boring shall be continued after penetration through such obstruction. Otherwise core drilling may be started with the approval of Client/Consultant after refusal in chiseling (if adopted) when encountered with rock strata.

All the relevant field observations including sample identification shall be presented in field borelog in standard approved format and handed over to MECON immediately after completion of each borehole.

On completion of boreholes, backfilling has to be carried out with granular materials like sand, moorum, crushed stone , bentonite slurry etc.

04.01.01 Standard Penetration Test (SPT)

This test shall be conducted in all types of soil deposit at 3 m interval & every change in strata and if required in disintegrated, weathered rock strata. In cases, where UDS is replaced by SPT for undisturbed sample, interval of SPT shall be 1.5 m. The specification for the equipment & accessories and procedure of the test shall conform to IS: 9640 and IS: 2131 respectively. This test shall be carried out by driving a split spoon sampler by means of 63.5 kg automatic trip hammer with a free fall of 75 cm driven for 45 cm. While driving, the number of blows for every 15 cm penetration and the penetration against every 50 blows shall be recorded. The first 15 cm drive shall be considered as seating drive and the total blows required for 2nd & 3rd 15 cm penetration shall be recorded as N value. Refusal is considered for N>100. In case of refusal, penetration against each 50 blows shall be recorded upto a total of 100 blows. The sample collected from split spoon sampler shall immediately be identified, labeled with borehole no. & depth and preserved for laboratory testing.

Time & Duration of each SPT shall be recorded & furnished in the report.

04.01.02 Chiseling

The objective of chiseling is to break any local obstruction such as boulder etc. if encountered during boring operation &/or to prove that rock strata has been encountered. Chiseling shall be carried out with minimum 0.2 tone cross type hard facing chisel falling from a height of not less than 2.0 m. Chiseling & subsequent cleaning with bailer shall be done alternately.

Sample thus obtained shall be carefully examined & properly preserved. Record of Chisel progress in terms of penetration (in cm) vs. number of blows shall be maintained all-through the chiseling operation.

04.01.03 Penetration through Boulder Deposit

In case Boulder deposit is encountered in the way of boring, the same shall be penetrated by suitable technique. All sorts of arrangement shall be made to continue unhindered advancement through Boulder deposit. The Boulder deposit shall be identified properly & shall be specifically distinguished from original rock stratum & properly furnished in the borelog.

Suitable diameter stable hole shall be made through Boulder deposit, so as to accurately assess the thickness of boulder layer & to make the passage for unhindered investigation & sampling of underlying virgin soil &/or virgin rock layer as per this specification. Maintaining stability of hole & withdrawal / leaving of casing is the sole responsibility of the contractor.

All necessary equipment & accessories required for investigation through such boulder deposit, shall be arranged by the contractor, cost of which shall be deemed to be included in the quoted unit rate for the same. No excuses, whatsoever, in relation to the inability of equipment to make stable hole through such boulder deposit, shall be entertained during execution of work.

04.01.04 Rock Core Drilling

If the strata with Standard Penetration Test (SPT) 'N' value greater than 100 along with characteristics of rock is met with, the borehole shall be advanced further by chiseling. During chiseling, rock fragments shall be collected. Identification of rock strata shall be on the basis of geological identification by visual examination of collected rock fragments. After it is ensured that rock is met with, borehole shall be advanced further by core drilling in rock. The drilling equipment & procedure should conform IS: 6926.

Core drilling shall be done by Hydraulic fed rotary core drilling equipment using NX size diamond bit & double tube swivel core barrel with suitable core catcher. Only clean water shall be used as drilling fluid. Rotational speed of bit, bit pressure & water pressure shall be suitably adjusted depending on the type of rock. Each drilling run shall normally be of 1.0 m length. If core recovery in any run is found to be less than 20%, then SPT shall be performed in that run, as per test procedure furnished in clause 04.01.01, before commencing the next run.

Core pieces recovered in each run shall be carefully extracted from core barrel held horizontally and placed serially from top downwards in core boxes specially made for this purpose as per IS: 4078. Each core sample of length greater than 50 mm shall be numbered sequentially.

All the drilling observations for each run shall be recorded as per IS: 5313, Drill Core study shall be done as per IS : 11315 (part 12) & furnished to Engineer-in-charge immediately after completion of each drillhole in standard approved format of core log mentioning depth, run length, rock description, core recovery, RQD, colour of return water, rate of penetration with time and any other relevant observation encountered during drilling operation viz. water loss etc. Core Recovery & RQD shall be recorded as per IS : 11315 (part 11). The description of rock samples shall be as per IS: 4464 indicating degree of weathering, fracturing, colour, grain size, strength, geological name along with special features like fault, lamination, direction of fault / fracture, spacing of discontinuity etc. Selected representative rock samples shall be sent to laboratory for necessary testing and the core boxes containing remaining samples shall be handed over to Engineer-in-charge for future reference.

04. 01.05 Engineering Geological Observation in Rock strata

Where investigation is to be carried out in rock strata, apart from rock core drilling records, the detailed field observation by an experienced engineering geologist shall also be done in Test Pits, other natural &/or man-made Excavations in & around the site. This shall include quantitative description of Orientation of discontinuity, Spacing of discontinuity, Thickness of discontinuity, Condition of discontinuity, Ground water condition & all other relevant qualitative geological features like

Weathering state, Structure, Colour, Grain Size, Strength, Mineral type, Rock name etc. for the exposed rock mass.

04.02 Laboratory Tests on Rock

Rock piece samples &/or rock core samples collected by chiseling &/or drilling shall be tested for the following.

i) Visual Classification(core recovery, RQD etc): as per IS:4464
ii) Water Content, Porosity & Density (bulk density, specific gravity): as per IS :13030
iii) Point Load Strength Index (In saturated state & dry state): as per IS: 8764
iv) Unconfined Compression (In saturated state & dry state): as per IS: 9143
v) Slake Durability: as per IS:10050

Whenever shallow foundation is recommended in the rock layer, Net Safe bearing capacity shall be determined in accordance with IS: 12070-1987 judiciously taking into consideration of the provision of IS: 13063-1991. For predicting engineering properties of rock mass by RMR method, IS: 13365 (Part 1)-1998 shall be followed.

5.0 TEST RESULTS AND REPORT

The Contractor shall submit the detailed report wherein information regarding the geological detail of the site, summarised observations and test data, bore logs, and conclusions and recommendations on the type of foundations with supporting calculations for the recommendations. Initially the report shall be submitted by the Contractor in draft form and after the draft report is approved, the final report shall be submitted.

The report shall include but not limited to the following

Bore Logs: Bore logs of each bore holes clearly identifying the stratification and the type of soil stratum with depth. The values of Standard Penetration Test (SPT) at the depths where the tests were conducted on the samples collected at various depths shall be clearly shown against that particular stratum.

Test results of field and laboratory tests shall be summarised strata wise as well in combined tabular form. All relevant graphs, charts tables, diagrams and photographs, if any, shall be submitted along with report. Sample illustrative reference calculations for settlement, bearing capacity, shall be enclosed.

Recommendations:

The report should contain specific recommendations for the type of foundation for the various structures envisaged at site. The Contractor shall acquaint himself about the type of structures and their functions from the Owner. The observations and recommendations shall include but not limited to the following:

Topography of the area, past observations or historical data, if available, for the area and for the structures in the nearby area, fluctuations of water table etc. Slope stability characteristics shall be specifically highlighted.

Recommended type of foundations for various structures.

Allowable bearing pressure on the soil at various depths (1m to 3m depth in general or more depth as per site condition) for different sizes of the foundations based on shear strength and settlement characteristics of soil with supporting calculations shall be submitted. Factor of safety for calculating net safe bearing capacity shall be taken as per relevant codes and standard practices.

Comments on the Chemical nature of soil and ground water with due regard to deleterious effects of the same on concrete and steel and recommendations for protective measures.

If expansive soil is met with, recommendations on removal or retainment of the same under the structure, road, drains, etc. shall be given. In the latter case detailed specification of any special treatment required including specification or materials to be used, construction method, equipments to be deployed etc. shall be furnished. Illustrative diagram of a symbolic foundation showing details shall be furnished.

In case of loose filled up soil or compressible soil recommendation for Pile foundation (End bearing Pile or skin friction pile or under-ream pile) as appropriate shall be recommended along with Geo-technical design of piles.

DRAFT REPORT

a) Drawings	-	two paper copies in colour and soft copy in email
b) Reports and Records	-	two paper copies in colour and soft copy in email

FINAL REPORT

a) Drawings	-	Four paper copies in colour and soft copy on pendrive
b)Reports and Records	-	Four paper copies in colour and soft copy on pendrive

PART-B

TECHNICAL SPECIFICATION FOR TOPOGRAPHICAL SURVEY

TOPOGRAPHIC SURVEY

06.0 The intent of the survey programme for the proposed sites is to obtain sufficient topographical data for finalising all engineering works and establishment of Reference levels and plot extremities for reference during construction of the project.

07.0 SCOPE OF WORK

07.01 The Terminals/SV plots along with approaches to the plots which are to be surveyed have been Identified in the enclosed Tender Document and shall also be clarified by the Engineer in charge during execution of work.

07.02 The Survey agency shall carry out detail survey of the area along with showing :-

- Physical features, spot levels, invert levels of existing drains and culverts in terms of RL with their cross sections, transmission/telephone lines, service lines etc. land survey by triangulation or other suitable method.
- Topographical survey indicating existing permanent and temporary structures including levels & limits.
- Drawing of terrain.
- Detailed levels and coordinates of existing roads and other units.
- Preparation of survey drawings with descriptive note on terrain.
- Setting of reference grid lines and temporary bench marks.
- True Norths.
- Grids at 5m internal shall be established parallel to true north. Working reference point to be fixed at site with reference to some permanent bench mark.
- Any Angle between grid north & True north.
- Check the co-ordinations of existing roads and other units with reference to the details indicated by MECON.

- Survey of 5M length beyond the periphery of the proposed boundary wall around the proposed site.

- Establish the HFL while indicating its source of information.

- To identify storm water disposal point with it's levels as per existing site condition.

- Plot plan to show all test locations w.r.to plot corner pegs as well as their RL.

- Procedure of investigation and method of tests adopted.

07.03 Survey Agencies scope of work includes supplying and fixing 100mm dia wooden pegs embedded upto a depth of 1000mm in ground and exposed 150 mm above ground at all the corners of plots

08.0 TECHNICAL SPECIFICATION

The details to be covered in the contract work shall include the following :

Total Station, Theodolite & Plane Table Survey

The area to be surveyed, as indicated in the tender drawing, shall be traversed by closed triangulations.

Co-ordinates of existing buildings/ structures underground pipelines, canals/ drains, power transmission lines, towers, boundary lines, road intersection, points manholes, trees, etc., have to be established with respect to N-E grid and shown on drawing.

Existing bench mark, new reference pillars, triangulation stations shall be shown in the drawing indicating their co-ordinates.

All survey data collected during the day shall be plotted on the drawing on the same day. All field books shall be maintained and submitted to the Owner on completion of survey and drawings if required.

Geo-graphical and UTM co-ordinates of all Surveyed Points and boundary points of the area shall be computed and furnished to IGGL/MECON in the form of to scale AutoCad Attribute lists.

08.01 Levelling work :

The levelling work shall be based on the bench marks available in the vicinity or any permanent existing features. Vertical control based on existing bench marks shall be established based on closed level network. Suitable instruments shall be used for establishing the bench marks and for doing the general levelling work. All survey points, reference grid / corner pillars (of wooden pegs), shall be protected in such a way so that they are not disturbed during the construction period. The size of pegs shall be minimum 100mm dia of Wooden balli which shall be embeded in ground. Reference point for the grid system shall be nearest to the existing permanent features.

08.02 Survey Details :

It shall be general survey work to be used for engineering purposes. The survey shall be oriented towards furnishing informations for project planning and detailed engineering work. The survey shall show all the existing features alongwith levels and important dimensions.

Existing features such as roads, railway tracks, buildings, drains, man-holes, over head & under ground service lines, communication and supply lines, and similar permanent and temporary structures shall be shown.
Each survey drawing shall show sets of perpendicular grid lines parallel to actual North, South and East, West with reference to reference point. These are needed for the purpose of orienting and matching the survey drawings with layout of the unit.

Ground levels shall be shown on rectangular grid pattern at intervals of 5 metres. Additional levels to show sudden change of levels shall also be indicated. Contours are to be drawn at 0.20 m intervals.

Inverts levels of existing drains at regular intervals shall be taken. Top levels of man-holes shall also be taken.

Existing levels at regular intervals and at all junctions for roads, top levels, width, curvature at turning points shall be shown. Any other important detail shall also be shown.

Co-ordinates of all existing buildings/structures, hutments and other dwellings including power transmission lines, towers etc. Within the area shall also be indicated.

Bench marks, reference points, triangulation stations, any existing bore-holes, oil wells trial pits etc. used shall be clearly identified in the drawing indicating their values/co-ordinates.

Co-ordinates mentioned above shall be surveyed with respect to the reference axes N-S and E-W.

All survey data collected during the day shall be plotted on the drawing sheet on the same day. These drawings shall be used for following, day-to-day progress of work and for quick reference, if needed.

08.03 Survey Drawing, Scale and Field Report :

All survey drawings shall be made in metric units.

One set of survey drawings showing all specified details shall be drawn in the scale 1:100. Generally, A-1 size sheets shall be used for drawings. Other standard sizes as per MECON standards may also be used as necessary.

DRAFT REPORT

a) Drawings - Two paper copies in colour and soft copy in email

b) Reports and Records - Two paper copies in colour and and soft copy in email

FINAL REPORT

a) Drawings - Four paper copies in colour and soft copy on pendrive

b) Reports and Records - Four paper copies in colour and soft copy on pendrive

Accuracy of Work for Survey

a) For General Survey (Contour & Topographical Details

Linear Measurement : 1 in 10,000

Leveling : ± 5 √ km mm
(Where KM is distance in Kilometer

b) For High Precision Survey
(Grid fixing & reference pillars)

Linear Measurement : 1 in 50,000

Leveling : ± 2 √ km mm

08.04 Instruments, Tools and Tackles :

The use of proper instruments is an important factor in survey work. The Contractor shall arrange his own instruments, accessories, tools and tackles, camping equipment and transport necessary for conducting the survey as per precision required.

Experienced and qualified engineers, surveyors and draughtsmen shall be engaged to carry out the work.

The contractor shall submit all original field notes, sketches of traverse with each station clearly identified, note book of original closure for all traverse, Note book for all COGO calculation & least square adjustments for all traverse, Note book / diary & log of site team leader.

Each survey team shall have atleast the following survey instruments and accessories.

a) Minimum One Total Station

b) Precision Automatic levels with precision levelling staff

c) Calculators

d) Precision Measuring Tapes

e) Targets sets

f) Levelling staff, Ranging Rods

g) Drawing office Instrument and accessories

h) Other supporting tools and tackles

Note- The above mentioned list of survey instruments is minimum. The contractor shall provide any other instrument if required to carry out the survey work.

TECHNICAL SPECIFICATION FOR STRUCTURAL WORKS

TECHNICAL SPECIFICATION FOR FABRICATION, ERECTION AND PAINTING OF STEEL STRUCTURES, GATES AND MISCELLANEOUS WORK

(Civil & Structural Section)

MECON LIMITED
(A Govt. of India Undertaking)

MECON Limited, 13th& 15th Floor,
North Tower, SCOPE MINAR,
Laxmi Nagar District Centre, Delhi-110092 (India)

Document No.	Revision No.	Date
MEC/05/22/C&S/TS/02	Rev -0	04-06-2026

© Copyright MECON Limited – All rights reserved.
THIS DOCUMENT IS THE SOLE PROPERTY OF MECON AND ISSUED FOR THE SPECIFIC PROJECT MENTIONED HEREIN. THIS IS NOT TO BE COPIED OR USED FOR ANY OTHER PROJECTS UNLESS EXPLICITLY PERMITTED BY MECON.

C O N T E N T S

1.	**General**		Page - 2
2.	**Section – 1**	Fabrication of steel structures	Page - 3
3.	**Section – 2**	Erection of steel structures	Page - 11
4.	**Section - 3**	Fabrication and erection of miscellaneous structures	Page - 16
5.	**Section – 4**	Painting of Steel Structures	Page - 19
6.	**Section – 5**	Special Conditions of Contract (Techincal)	Page - 22

LIST OF ANNEXURES

Annexure - A Permissible Deviation in pitch and gauge of holes or bolts of normal accuracy

Annexure – B Tolerance of assembled components of steel structures

Annexure – C Tolerance in erected steel structures

Annexure – D Material of Construction

Annexure – E List of Preferred Makes for Steel Structural Works

TECHNICAL SPECIFICATION FOR FABRICATION, ERECTION AND PAINTING OF STEEL STRUCTURES AND CHAIN LINK FENCING

1.0 GENERAL

1.1 This specification shall apply to general steelwork, chain link fencing and gates in natural gas pipeline, other pipelines and terminals. The structures shall include platforms, crossovers, ladders, staircases, chequered plate pipe supports, skid supports, canopies, structural sheds, stockades/trestles, monorail beam, MS Gate for Boundary wall, display sign Boards, etc.

SECTION-1: FABRICATION OF STEEL STRUCTURES

2.0 **SCOPE OF WORK**

2.1 The scope of work under fabrication includes, but not limited to, the following:

a) Preparation and supply of material indents, bolt lists, bought out items list, etc.

b) Procurement and collection of all material from stockyards/stores, including loading, transportation, unloading and stacking and storing on skids or supports.

c) Procurement and collection of all consumables like bolts, nuts, washers, electrodes, paints, shims, packs, etc., including allowance for spares and wastage.

d) Preparation and submission of modification/rectification sketches, As-Built drawings, erection drawings, bill of materials, and shipping documents for approval of CLIENT.

e) Cold straightening of section and plates, whenever they are bent and kinked.

f) Fabrication of all steel structural components covered under tender drawings, design drawings and generally described under the scope of the project.

g) Making arrangements for and conducting tests such as chemical analysis, physical and mechanical tests on raw materials where specified/as directed by CLIENT.

h) Control Assembly of steel structural components at shop, wherever required.

i) Preparation of steel structural surfaces for painting as provided in the specifications/drawings.

j) Application for one primer coat of painting at shop, as specified in the design drawing/specifications.

k) Loading, transportation from fabrication workshop to site of erection and unloading of all steel structural components/units/assemblies.

l) Preparation of ‘As-built’ drawings.

3.0 MATERIALS

3.1 Structural Steel

3.1.1 Structural steel and other related materials for construction shall conform to **Annexure-D.**

3.1.2 Due to non-availability of specified materials, suitable substitutions may be provided with the consent of CLIENT. Such substitution shall be incorporated in the "As-built" drawings.

3.1.3 All the items are to be cut as per requirements of the drawing. If joints are to be provided in any item in order to meet requirements of size and shape, cutting plan showing locations of joints shall be prepared for consideration of purchaser. Joints provided shall be incorporated in "As-built" drawings.

3.1.4 Rolling and cutting tolerances shall be as per IS:1852-2017.

3.1.5 Only tested materials shall be used unless use of untested materials for certain secondary structural members is permitted by CLIENT. If test certificate for the material is not available from the main producer, the following tests shall be carried out at the discretion of CLIENT:

a) Chemical Composition
b) Mechanical Properties
c) Weldability test

3.2 Bolts and Nuts

3.2.1 Black hexagonal bolts, nuts and lock nuts shall conform to IS:1363-2002.

3.3 Electrodes

3.3.1 Electrodes shall conform to IS:814-2019.

4.0 STORING OF MATERIALS

4.1 Materials shall be stored and stacked properly ensuring that place is properly drained and is free from dirt. It shall be ensured that no damage is caused due to improper stacking.

5.0 MATERIAL PREPARATION

5.1 Cut edges shall be finished smooth by grinding or machining wherever necessary. Sufficient allowance (3mm to 5mm) should be kept in the items incase machining is necessary.

5.2 Cutting may be effected by gas cutting, shearing, cropping or sawing.

5.3 Straightening and bending shall be done in cold condition as far as practicable.

5.4 If required, straightening and bending may be done by application of heat between 900ºC and 1100ºC. Cooling down of the heated item shall be done slowly.

6.0 DRILLING AND PUNCHING OF HOLES

6.1 Drilling and punching of holes for bolts shall be in accordance with IS:800-2007, unless otherwise specified by CLIENT.

6.2 Drifting of holes for bolts during assembly shall not cause enlargement of holes beyond permissible limit or damage the metal.

6.3 Holes for bolted connection should match well to permit easy entry of bolts. Gross mismatch of holes shall be avoided.

6.4 Permissible deviation in holes for mild steel bolts of normal accuracy and high strength bolts are given in the **Annexure-A**.

7.0 ASSEMBLY FOR FABRICATION

7.1 Fabrication of all structural steelwork shall be in accordance with IS:800-2007 and in conformity with various clauses of this Specification, unless otherwise specified in the drawings.

7.2 Fabrication of structures shall preferably be taken up as per the sequence of erection.

7.3 All erection units shall bear reference drawing no. at a prominent location on the structures for easy identification at site.

7.4 Fabricated structures shall conform to tolerance as specified in this Specification and in IS:7215-2016. In case of contradiction, tolerance specified in this Specification shall prevail.

7.5 All the components of structures shall be free from twist, bend, damage, etc.

7.6 Splice joints shall generally be of full strength butt weld and wherever possible, shall be located at zones of minimum or substantially lesser stress.

7.7 Splice joints of flange and web should preferably be staggered.

7.8 Where necessary, washers shall be tapered or otherwise suitably shaped to give the heads of nuts and bolts satisfactory bearing.

7.9 The threaded portion of each bolt shall project through the nut at least by one thread.

7.10 Tolerance of assembled components of structures are given in **Annexure-B**.

7.11 Permissible deviations from designed (true) geometrical form of the despatch elements shall be in accordance with IS:7215-2016.

8.0 WELDING

8.1 The Contractor shall work out welding procedure for CLIENT's approval, considering the following factors:

i) Specification and thickness of steel.
ii) Specification of electrode or/and base wire.
iii) Welding process (manual arc welding, submerged arc welding).
iv) Type of structures to be welded (thickness of components meeting at a joint).
v) Sequence of welding.
vi) Weather condition.
vii) Inspection procedure to be followed
viii) Design requirements of the joints.

8.2 All metal arc welding shall be carried out as per IS:9595-1996.

8.3 Electrode shall conform to Clause no. 3.3 of this Specification.

8.4 Electrodes shall be stored in a dry place. Electrodes whose coatings are damaged due to absorption of moisture or due any other reason shall not be used.

8.5 Recommendations of electrode manufacturer are to be strictly followed.

8.6 Welding surface shall be smooth, uniform, free from fins, tears notches or any other defect which may adversely affect welding.

8.7 For multi-run weld deposit, the next run should be done only after thorough removal of slag and proper cleaning of surface.

8.8 Fillet weld shall have the correct profile with smooth transition into parent metal. Dressing of welds, if specified, shall be done by such method which does not cause grooving and other surface defects on the weld or on the parent metal.

8.9 Fillet welds shall not be stopped at corners but shall be returned round them.

8.10 Welding shall not be done under such weather conditions which might adversely affect the efficiency of the welding.

8.11 Ends of structural members and portions of gussets receiving welding at site shall be left unpainted.

8.12 Permissible deviation in assembly of weld joints shall be in accordance with **Annexure-C**.

9.0 INSPECTION & TESTING

9.1 CLIENT/Inspector shall have free access at all times to those parts of Contractor's or his Sub-contractor's works which are concerned with the fabrication of steel works and shall be afforded all reasonable facilities at all stages of preparation, fabrication and trial assemblies for satisfying himself that the fabrication is being undertaken in accordance with the provisions of relevant specification.

9.2 All gauges and templates, tools, apparatus, labour and assistance for checking shall be supplied by the contractor free of charge. CLIENT/Inspector may, at his discretion, check the test results obtained at the Contractor's works, by independent test at the Government Test House or elsewhere, and should the material so tested be found to be unsatisfactory, the cost of such test shall be borne by the Contractor.

9.3 Contractor shall make all necessary arrangements for stage inspection by CLIENT/Inspector during the fabrication at shop and incorporate all on-the-spot instructions/ changes conveyed in writing to the Contractor.

9.4 Material improperly detailed or wrongly fabricated shall be reported to CLIENT/Inspector and shall be made good as directed. Minor misfits which can be remedied by moderate use of drift pins, and moderate amount of reaming and slight chipping may be corrected in that manner, if

in the opinion CLIENT/Inspector, the strength or appearance of the structure will not be adversely affected. In the event CLIENT/Inspector directs otherwise, the items will be rejected and a completely new piece shall be fabricated. The cost of correcting errors shall be to the account of the Contractor.

9.5 i) CLIENT/Inspector shall have the power:

a) To certify, before any structure is submitted for inspection, that the same is not in accordance with the contract, owing to the adoption of any unsatisfactory method of fabrication.

b) To reject any structure as not being in accordance with Specification and drawings.

c) To insist that no structure or parts of the structure once rejected is resubmitted for inspection/test, except in cases where CLIENT/ Inspector considers the defects as rectifiable.

ii) If, on rejection of structure by CLIENT/Inspector, the Contractor fails to make satisfactory progress within the stipulated period, CLIENT/Inspector shall be at liberty to cancel the contract and fabricate or authorize the fabrication of the structures at any other place he chooses, at the risk and cost of the Contractor, without prejudice to any action being taken in addition to terms of General Conditions of Contract.

iii) CLIENT/Inspector's decision regarding rejection shall be final and binding on the Contractor.

iv) The Specifications prescribe various tests at specified intervals for ascertaining the quality of the work done. If the tests prove unsatisfactory, CLIENT/Inspector shall have liberty to order the Contractor to re-do the work, done in that period and/or to order such alterations and strengthening that may be necessary at the cost of the Contractor and the contractor shall be bound to carryout such orders failing which the rectification/redoing will be done by CLIENT through other agencies and the cost recovered from the Contractor.

v) Notwithstanding any inspection at the workshop, CLIENT/Inspector shall have the liberty to reject, without being liable for compensation any fabricated members or materials brought to site that do not conform to specifications/drawings.

vi) All rejected materials shall be removed from the site of fabrication by the Contractor at his own cost and within the time stipulated by CLIENT/Inspector.

10.0 CONTROL IN WELDING

10.1 The extent of quality control in respect of welds for structural elements shall be as follows and shall be conducted by the contractor at his own cost:

a) Visual Examination - All welds shall be 100% visually inspected to check the following:

i) Presence of undercuts
ii) Visually identifiable surface cracks in both welds and base metals
iii) Unfilled craters
iv) Improper weld profile and size
v) Excessive reinforcement in weld
vi) Surface porosity

Before inspection, the surface of weld metal shall be cleaned of all slag, spatter matter, scales etc. by using wire brush or chisel.

b) Dye Penetration Test (DPT) - This shall be carried out for all important fillet welds and groove welds to check the following :

i) Surface cracks
ii) Surface porosity

Dye Penetration Test shall be carried out in accordance with American National Standard ASTM E165.

11.0 ACCEPTABLE LIMITS OF DEFECTS IN WELD

11.1 The limits of acceptability of defects detected during visual inspection and Dye Penetration Test shall be in accordance with clause 8.15.1 American National Standard ANSI/AWS D1.1-96.

12.0 RECTIFICATION OF DEFECTS IN WELDS

12.1 In case of detection of defects in welds , the rectification of the same shall be done as follows :

i) All craters in the weld and breaks in the weld run shall be thoroughly filled with weld.

ii) Undercuts, beyond acceptable limits, shall be repaired with dressing so as to provide smooth transition of weld to parent metal.

iii) Welds with cracks and also welds with incomplete penetration, porosity, slag inclusion etc. exceeding permissible limits shall be rectified by removing the length of weld at the location of such defects plus 10 mm from both ends of defective weld, and shall be re-welded. Defective weld shall be removed by chipping hammer, gouging torch or grinding wheel. Care shall be taken not to damage the adjacent material.

13.0 DESPATCH INSTRUCTIONS

Each despatchable structure shall bear mark no. along with reference drawing number at two prominent locations.

13.1 "As-built" drawings shall be prepared after fabrication is completed to indicate additions/alterations made during the process of fabrication. (Refer clause 3.1.2 & 3.1.3.)

13.2 Center lines of column flanges and both sides of web shall be punched, preferably at top and bottom to facilitate alignment after erection.

14.0 COMPLETION DOCUMENTS

14.1 On completion of work, the Contractor shall submit to CLIENT the following documents:

a)The technical documents according to which the work was carried out.
b)Copies of the "As built" drawings showing thereon all additions and alterations made during fabrication.
c)Manufacturer's test certificates
d)Certificates/documents on control checking
e)Test of welds

14.2 Inspection Certificates shall be issued to the contractor for the structures found acceptable in all respects by CLIENT/Inspector.

SECTION-2: ERECTION OF STEEL STRUCTURES

15.0 SCOPE OF WORK

In addition to provision of erection and transport equipment, the scope of work includes supply of tools and tackles, consumables, materials, labour and supervision and shall cover the following:

a) Storing and stacking of all fabricated structural components/units/ assemblies at site storage yards till the time of erection.

b) Transportation of structures from storage yard to site of erection, including multiple handling, if required.

c) All minor rectification/modifications such as:

i) Removal of bends, kinks, twists etc. for parts damaged during transportation and handling.

ii) Reaming of holes which do not register or which are damaged, for use of next higher size bolt.

iii) Plug welding and re-drilling of holes which do not register and which cannot be reamed for use of next higher size bolt.

iv) Drilling of holes which are either not drilled at all or are drilled in incorrect position during fabrication.

d) Fabrication of minor missing items as directed by CLIENT.

e) Verification of the position of embedded anchor bolts and inserts w.r.t. line find levels, installed by others based on Geodetic Scheme/Bench mark/ Reference co -ordinates taken by the Contractor.

f) Rectifying at site damaged portions of shop primer by cleaning and application touch-up paint.

g) Erection of structures including making connections by bolts/welding as per drawing.

h) Alignment of all structures true to line, level plumb and dimensions within specified limits of tolerance.

i) Application at site after erection, required number of coats of primer and finishing paint as per specification and drawing.

j) Rectification of structures as per instructions of the Engineer-Incharge.

16.0 STORING AND HANDLING

16.1 Storage of structures shall be preferably be done in such a manner that erection sequence is not affected.

16.2 While storing, care shall be taken so that structures do not come in direct contact with the earth surface and accumulated water.

16.3 Stacking of the structures shall be done in such a way that, erection marks are visible easily and handling does not become difficult. Wherever required, wooden sleepers/grillage may be used.

16.4 Handling and storage of materials shall be as per IS:7969-2017, to ensure safety.

17.0 ERECTION

17.1 General

17.1.1 Erection shall be carried out in accordance with IS:800-2007 and other relevant standards referred to therein.

17.1.2 For safe and accurate erection of structural steelwork, staging, temporary support, false work, etc. shall be erected as required.

17.1.3 The fabricated materials received at erection site shall be verified with respect of marking on the key plan/marking plan or shipping list.

17.1.4 Any material found damaged or defective shall be stacked separately and the damaged or defective portions shall be painted in distinct colour for identification and the same shall be brought to the notice of CLIENT.

17.2 Erection Drawings

17.2.1 The approved erection drawings and any approved arrangement drg, specification or instruction accompanying them shall be followed in erecting structures.

17.3 **Erection of Structures**

17.3.1 Erection work shall be taken up after receipt of clearance from CLIENT.

17.3.2 For safety requirements during erection, provisions in IS:7205-2016, IS:7969-2017 and other relevant Indian standards shall be followed.

17.3.3 Erection shall be carried out with the help of maximum mechanization possible.

17.3.4 Prior to commencement of erection, all the erection equipment, tools, tackles, ropes, etc. shall be tested for their load carrying capacity. Such tests may be repeated at intermediate stages also if considered necessary and frequent visual inspection shall be done of all vulnerable areas and components to detect damages or distress in the erection equipment, if any.

17.3.5 Following shall be taken care of during erection, whenever necessary:

17.3.5.1 Erected members shall be held securely in place by bolts to take care of dead load, wind load and erection load.

17.3.5.2 All connections shall achieve free expansion and contraction of structures wherever provided.

17.3.5.3 No final bolting or welding of joints shall be done until the structure has been properly aligned.

17.3.5.4 Instrumental checking of correctness of initial setting out of structures and adjustment of alignment shall be carried out in sequence and at different stages as required. The final levelling and alignment shall be carried out immediately after completion of each section.

17.3.5.3 The Contractor shall design, manufacture, erect and provide falsework, staging temporary support etc. required for safe and accurate erection of structural steelwork and shall be fully responsible for the adequacy of the same.

17.3.5.4 The Contractor shall also provide facilities such as adequate temporary access ladders, gangways, tools & tackles, instruments, etc. to CLIENT/Inspector for his inspection at any stage during erection.

17.4 **Field Connections**

17.4.1 Assembly by permanent bolts.

17.4.1.1 The numbers of washers on permanent bolts shall not be more than two (and not less than one) for the nuts and one for the bolt head.

17.4.1.2 Wooden rams or mallet shall be used in forcing members into position in order to protect the metal from injury or shock.

17.4.1.3 Where bolting is specified on the drawing, the bolts shall be tightened to the maximum limit. The threaded portion of the each bolt shall be project through the nut by at least one thread. Tapered washers shall be provided for all heads and nuts to achieve uniform bearing on sloping surface.

17.4.1.4 To prevent loosening of nuts, spring washers or lock nuts shall be provided as specified in the design/shop drawings.

17.4.1.5 All machine-fitted bolts shall be perfectly tight and the ends shall be checked to prevent nuts from becoming loose. No unfilled holes shall be left in any part of the structures.

17.4.2 Assembly by welding.

17.4.2.1 All field assembly by welding shall be executed in accordance with the requirements for shop fabrication. Where the steel has been delivered painted, the paint shall be removed before field welding for a distance of at least 50mm on either side of the joints to be welded.

17.4.2.2 All other requirements in welding shall be in accordance with clauses specified under Section-1 of this Specification

18.0 ACCEPTANCE STANDARD OF WELDING

18.1 Acceptance standard of welding shall be as specified in Section-1 of this Specification.

19.0 BEDDING AND GROUTING

19.1 Base plates shall be set to elevations shown on the drawings, supported aligned and levelled using steel wedges and shims or by other approved methods. Plates shall be levelled properly, positioned and the anchor bolts tightened.

20.0 PAINTING AFTER ERECTION

20.1 The painting shall be as per painting specification (Section-4) of this Specification) and instruction given on drawings.

20.2 Site painting shall not be done in frosty or foggy weather or when humidity is such as to cause condensation on the surface to be painted.

21.0 ERECTION TOLERANCE

Maximum permissible tolerance in erected steel structures shall be as given in **Annexure-C**.

22.0 ACCEPTANCE OF WORK

22.1 Acceptance of erected steel structures shall be either after completion of erection of all the structures or in blocks.

22.2 Preliminary Acceptance will be done in the following cases:

i) Any steelwork or part thereof embedded in concrete.

ii) Steel structures which are to be covered in the process of carrying out further work.

23.0 DOCUMENTATION

23.1 The following documents shall be prepared at the time of acceptance of erected structures:

i) Documents showing actual deviations made during execution of erection work and approval of competent authority.

ii) Documents showing acceptance of embedded structures.

iii) Certificate/documents on control checking and test of materials (if any) and weld.

iv) Data and result of geodetic measurements obtained while checking the erection of the structures.

23.2 Copies of “As-Built” drawing showing thereon all additions and alternations which took place between approval of drawing and erection of structures.

SECTION-3: FABRICATION AND ERECTION OF MISCELLANEOUS STRUCTURES

24.0 SIDE & ROOF CLADDING WITH ZINCALUME HIGH TENSILE SHEETS.

The scope of work shall cover:

a. Procurement and supply sheets of all sizes, flashing and fittings like corner pieces, apron pieces, ridges, cutting and bending of sheets, wherever required, drilling of holes all as per Specification and Drawings.

b. Procurement and supply of all fixtures and accessories such as self drilling, self tapping fasteners (galvanised with EPDM seals), washers, sealants, neoprene fillers etc.

c. Loading, transportation, unloading and delivery of sheeting with material from place of procurement to erection site.

d. Provision of all tools and tackles, equipment, labour supervision and services required for the satisfactory completion of the work specified herein and on the drawings.

e. Erection in position of sheets at all locations; all work as per specification and drawings.

24.1 Fixing of sheets

24.1.1 All fixing of the roof and side sheeting to purlins shall be by means of self drilling, self tapping screws.

24.1.2 Self Tapping screws shall be provided at all crest/valley at purlin locations for roof sheeting and at all valleys of the corrugations for side sheets.

24.1.3 All sheets shall be stitched together by self drilling/self tapping screws at spacing not more than 500mm.

24.2 Holing

All holes for sheeting and accessories to be drilled. Punching of holes will not be permissible under any circumstances.

24.3 Laps

24.3.1 All roofing shall be provided with two corrugations side lap and 200mm end lap.

24.3.2 All side/gable end sheets shall be provided with single corrugation side lap and 100mm end lap.

24.3.3 Overhang of sheets on the roof and side cladding shall not exceed 300mm.

24.4 Erection

Erection is to be carried out with the lay of the side laps such that under the prevailing wind, rain is not driven into the lap. The sheets shall be laid so that side lap in any two consecutive rows is staggered.

25.0 CHAIN LINK FENCING

The scope of work shall cover:

a) Procurement and supply mesh, line wire, stretcher bar, barbed wire (if shown in the drawings) and other accessories for chain link fencing and gate all as per specifications and drawings.

b) Loading, transportation, unloading and delivery of material for fencing and gate from place of procurement to erection site.

c) Provision of all tools, tackles, equipment, labor, supervision and services required for the satisfactory completion of the work specified herein and on the drawings.

d) Erection in position of the fencing and gate at all locations, all work as per specification and drawings.

25.1 **Erection**

25.1.1 The height of barbed wire shall be as per drawing to top of vertical post. Where barbed wire is to be provided, the height shall be an extra 500mm to the top line of barbed wire attached to the cranked top.

25.1.2 Straining posts shall be provided at all ends and corners of fences, at changes in direction or acute variations in levels and as per drawings. Intermediate posts shall be spaced at regular intervals not exceeding 1.5m.

25.1.3 Struts shall be fitted to all straining posts behind the chain link fabric in the direction of the fence.

25.1.4 There shall be four evenly spaced rows of line wire. The top wire shall be doubled, making five line wires in all. The bottom wire shall be close to the ground. Each line wire shall be strained

lightly by means of eyebolt strainer at each straining point. The eyebolt strainer shall consist of bolt with welded eye. The bolt shall be sufficiently threaded and fitted with a nut and washer. Each line wire shall be secured to each of the intermediate posts by a wire stirrup passing through holes in the posts and secured to the line wire by three complete turns on each side of the post. Two-way eyebolt strainers shall have suitable ring nuts fitted after wires have been strained on one side.

25.1.5 The mesh shall be strained between each pair of straining posts and shall be secured to each straining post by means of a stretcher bar. One of the top line wires shall be threaded through the appropriate adjacent rows of mesh, care being taken that no meshes in the rows are by-passed by the line wire except where deviation is necessary at the straining posts. The second top line wire shall be strained in front of the fencing. The mesh shall be attached to top and bottom line wires by wire ties spaced 150mm apart and to other line wires by wire ties spaced 450mm apart. Bottom row of the mesh shall be threaded to the foundation concrete using staples spaced 500mm apart and set in concrete to a depth of 150mm. The top of concrete shall be 50mm above G.L. and 50mm below the fencing.

25.1.6 Four lines of barbed wire shall be provided where specified in the drawing. The wire shall be attached by eyebolts to the cranked tops of the straining posts. On all the intermediate posts, they shall be secured to cranked tops with stirrup wires. The barbed wire shall be fitted with one dropper at the center of each bay and secured to the wires to prevent them from bunching together.

25.2 **Chain link fencing Gate**

25.2.1 A gate of suitable width shall be provided in the direction of the chain link fabric. The mesh and barbed wire used for the fabrication of gate shall be identical in all respects to that of chain link fencing. The gate may be single leaf or double leaf depending on the width of the gate.

25.2.2 The gate frame shall be an angle frame with stiffeners at mid-height and mid-width. The mesh shall be welded to the gate frame/stiffeners.

25.2.3 Each leaf of the gate shall be supported on a pivot in the foundation for the straining post and shall be laterally held at two points, one near the top of the straining post and second near the middle of the straining post. The free end of each leaf shall be provided with a tower bolt at the base of the frame. An aldrop shall be provided at the mid-height of the frame.

SECTION-4: PAINTING OF STEEL STRUCTURES

26.0 SURFACE PREPARATION FOR PAINTING

26.1 **General**

The steel surface which is to be prepared shall be cleaned of dirt and grease and the heavier layers of rust shall be removed by grinding prior to actual surface preparation to a specified grade.

Surface preparation to be followed prior to painting shall be based on the requirement of a particular painting system as per Clause 28.0.

26.2 **Mechanical Cleaning**

Manual/ power tool cleaning shall be done as per grade St-2 or St-3, of Swedish Standard Institution SIS 055900.

i) Grade St-2: Thorough scraping and wire- brushing, machine brushing, grinding etc. This grade of preparation shall remove loose mill scale, rust and foreign matter. Finally the surface is to be cleaned with a vacuum cleaner or with clean compressed air or with clean brush. After preparation, the surface should have a faint metallic sheen. The appearance shall correspond to the prints designated St-2.

ii) Grade St-3: very thorough scraping and wire brushing, machine brushing, grinding etc. The surface preparation is same as for grade St-2 but to be done much more thoroughly. After preparing the surface, it should have a pronounced metallic sheen and correspond to the prints designated St-3.

26.3 If no grade of surface preparation is specified, Grade St-2 shall be followed.

27.0 PAINTS AND PAINTING

27.1 For use of specific painting system as mentioned in the Specification, the paint manufacturer's specification shall prevail.

27.2 General compatibility between primer and finishing paints shall be established through the paint manufacturer supplying the paints.

27.3 Before buying the paint in bulk, it is recommended to obtain sample of paint and establish "Control Area of Painting". On control area surface preparation and painting shall be carried out in the presence of manufacturer of paint.

27.4 In order to ensure that the supplied paint meets the stipulation in design drawing/specification, if required, samples of paint shall be tested in laboratories to establish quality of paint with respect to viscosity, adhesion/bond of paint in steel surfaces, adhesion/simulated salt spray test, chemical analysis (percentage of solids by weight), normal wear resistance as encountered during handling & erection, resistance against exposure to acid fumes, etc.

27.5 Whole quantity of paint for a particular system of paint shall be obtained from the same manufacturer.

27.6 Thinners, wherever used, shall be as per recommendation of the paint manufacturer.

27.7 Areas which become inaccessible after assembly of structures shall be painted before assembly, after cleaning the surfaces as specified.

27.8 Wherever shop primer painting is scratched, abraded or damaged, the surfaces shall be thoroughly cleaned using emery paper and power-driven wire brush wherever warranted, and touched up with corresponding primer. Touching up paint shall be matched and blended to eliminate conspicuous marks.

27.9 If more than 50% of the painted surface of an item requires repair, the entire item shall be mechanically cleaned and new primer coats shall be applied followed by finishing coats as per painting specification.

All field-welded areas on shop-painted items shall be mechanically cleaned (including the weld area proper, adjacent areas contaminated by weld spatter or fumes and areas where existing primer. intermediate / finishing paint is burnt). Subsequently, new primer and finishing coats of paint shall be applied as per painting specification.

27.10 Application of paint shall be by spraying or brushing as per IS:487-1997 and in uniform layers of 50% overlapping strokes. Painting shall not be done when the temperature is less than 5°C or relative humidity more than 85%, unless manufacturer's recommendations permit. Also painting shall not be done in frosty or foggy weather. During application, paint agitation must be provided wherever such agitation is recommended by the manufacturer.

27.11 Paint shall be applied at manufacturer's recommended rates. The number of coats shall be such that the minimum dry film thickness (DFT) specified is achieved. The dry film thickness

of painted surfaces shall be checked with elcometer or measuring gauges to ensure application of specified DFT.

27.12 All structures shall receive appropriate number of primer and finishing coats in order to achieve overall DFT as per design drawings/specifications. First coat of primer paint shall be applied not later than 2-3 hours after preparation of surface, unless specified otherwise.

27.13 The finishing paint as specified shall be of approved colour and quality. The under coat shall have different tint to distinguish the same from the finishing coat.

27.14 Edges, corners, crevices, depressions, joints and welds shall receive special attention to ensure that they receive painting coats of the required thickness.

27.15 Parts of surfaces embedded in concrete shall be thoroughly cleaned of grease, rust, mill scale etc. and shall be given a protective coat of Portland cement slurry immediately after fabrication. No paint shall be applied on this part.

27.16 Zinc-rich primer paints, which have been exposed several months before finishing coat is applied, shall be washed down thoroughly to remove soluble zinc salt deposits. In similar circumstances, the surfaces of paint based on epoxy resin should be abraded or lightly blast cleaned to ensure adhesion of next coat.

27.17 Surfaces which cannot be painted but require protection shall be given a coat of rust inhibitive grease according to IS:958-2000 or equivalent international standard.

28.0 PAINTING SYSTEM

The recommended painting system for general service requirement of steel structures covering surface preparation, application of primer coats, intermediate coats and final coats to develop the required minimum dry film thickness on steel surface is indicated as below

a. Surface preparation: Sa 2½ according to IS:9954.

b. Primer paint: Two coats of epoxy based red oxide or zinc phosphate (DFT 40µ/coat)

c. Intermediate paint: One coat of epoxy based MIO (DFT 75µ)

d. Finishing paint: Two coats of epoxy amine/polyamide cured finish (DFT 40µ/coat)

SECTION 5 - SPECIAL CONDITION OF CONTRACT (TECHNICAL)

29.00 Quotation

29.01 The tenderer should ascertain himself, by a visit to the site if necessary, the actual site conditions, local factors, etc. The Contractor shall bear full responsibility for deductions and conclusions as to the nature and conditions under which the work is to be executed, including effect of climate, rainfall, etc. Failure to do so will not absolve the Contractor of his responsibilities about the proper execution of the job. No claims for extra payments due to any special site conditions and ignorance of site conditions will be considered after the acceptance of his tender.

29.02 The Contractor shall indicate his price as per Schedule of Quantities given in tender

29.03 The enclosed tender drawings are deemed to be sufficient for the tenderer to assess the nature and quantity of work involved and to quote his prices for the above job. No payment on account of deviations from the tender drawings will be admissible.

29.04 The cost & weight of MS bolts (permanent and erection), washers, electrodes, putty, all types of fasteners, gases, cost of straightening the raw materials (hot bending not permitted), cutting of flats from plates and providing splices, paints, tools, plants, etc., as required for the work shall be deemed to be included in the quoted price.

29.05 All handling and transport charges of raw materials and fabricated structures, including double handling if required, for completion of the work in accordance with time schedule are deemed to be included in the quoted price.

30.0 MEASUREMENTS

30.1 **Structural Steel**

Structural steelwork will be measured by the metric tonne and as per IS:1200(Part-8)-2017 and IS:1200(Part-9)-2017 subject to provisions outlined below:

a) The calculation of quantities shall be based on unit weights for structural sections as given in IS Handbooks. In the case of mild steel plates, the calculated weights shall be based on 78.5 kg/m^2/centimeter thick plate. The payments will be made on the basis of weights of members as per drawings. However, any changes on the above weights during fabrication erection, payment shall be based on sketches approved by CLIENT.

b) In the event the IS does not specify any mode of measurement for a particular item of work, the same shall be measured as per any other relevant international standard or as directed by CLIENT.

c) The weight of all plates and sections shall be calculated from the approved drawing using the minimum overall square or rectangular dimensions and theoretical weight, no deduction being made for skew cuts, holes etc. In the case of plates, other than gussets, the actual dimensions shown on approved drawings will apply unless approved otherwise by the purchaser based on cutting diagram of mother plates.

d) The weight of all welding runs, bolt, stanchion base packing, cuttings to waste and rolling margins, and coatings of paint, will be excluded from the measured weight and shall be deemed to have been allowed for in the rates for structural steelworks quoted by the Contractor.

e) Temporary works and all other materials not included in the permanent works shall be excluded from any measurement for payment.

f) Chain link fencing including angle iron post shall be measured in running meter basis, as specified and shown on the drawings.

30.2 **Sheets**

30.2.1 Sheets for roofing and side cladding shall be measured by lump sum or the square meter of net laid area, as specified and shown on the drawings or scope of work.

30.2.2 No allowance shall be made for wastage, cutouts, overlaps, etc., in the measurement.

30.2.3 The unit rate shall include all fasteners, flashing and fitting such as ridges corners, aprons and other accessories.

30.2.4 No deduction will be made for openings for area less than a single sheet. Also no extra payment will be made for making openings.

31.0 ACCEPTANCE OF WORKS

31.1 After completing the erection of a unit or portion thereof, the Contractor shall give a notice in writing stating that the job is complete in all respects and ready for preliminary acceptance. The job shall be jointly inspected visually by representatives of Contractor and CLIENT. All observed defects and omissions as per drawing and specification shall be noted down.

31.2 The Contractor shall make good all these defects, deficiencies and omissions and shall inform in advance CLIENT/Inspector for inspection. The Engineer-Incharge shall satisfy himself that all the defects, deficiencies and omissions noted down during preliminary acceptance have been rectified.

Annexure-A

Permissible deviations in pitch and gauge of holes for bolts of normal accuracy

Sl. No.	Description	Hole Diameter (mm.)	Permissible deviations in spacing (mm.)	Permissible deviations in each group of holes	
				Carbon steel	Low alloy steel
a.	Deviation in hole diameter.	Upto 17	+1.0	No limits	
		Above 17	+1.5		
b.	Ovality (Difference between the biggest and the smallest diameters).	Upto 17	+1.0	No limits	
		Above 17	+1.5		
c.	Curves exceeding 1mm. and cracks on the hole edges.		-	Not permissible	
d.	Non-coincidence of holes in separate details of the assembled unit:				
	Upto 1mm.	-	-	Upto 50%	Upto 50%
	Above 1mm. upto 1.5mm.	-	-	Upto 10%	Upto 10%
e.	Slope of axis.	-	Upto 30% the thickness of unit.	No limits	No limits

Annexure-B

Tolerance of Assembled Components of Structures

Sl. No.	Description of components in structures	Deviation (±) mm. for elements of structures						
		Upto 1m.	**1m. to 5m.**	**5m. to 10m.**	**10m. to 15m.**	**15m. to 20m.**	**20m. to 25m.**	**Over 25m.**
1.								
i.	Deviations from the dimensions assembled.							
	Length and width of the details cut:							
a.	Manual gas cutting as per marking	3.0	3.5	4.0	4.5	5.0	-	-
b.	With shears or with saw as per marking.	2.0	2.5	3.0	3.5	4.0	-	-
c.	With shears or with a saw with a stop.	1.5	2.0	2.5	3.0	3.5	-	-
d.	Machine gas cutting.	2.0	2.5	3.0	3.5	4.0	-	-
ii.	Length and width of planed processed onedge planing machine.	1.0	1.5	2.0	2.5	3.0	-	-
2.								
i.	Distance between centers of the end holes:							
a.	Drilled according to marking.	2.0	2.5	3.0	3.5	4.0	-	-
b.	Drilled according to a gauge with bushing.	1.0	1.5	2.0	2.5	3.0	-	-
ii.	Distance between centers of adjacent holes:							
a.	Drilled according to marking or a gauge..	1.5	-	-	-	-	-	-
b.	Drilled according to a gauge with bushing.	0.5	-	-	-	-	-	-

Annexure-C

Tolerances in Erected Steel Structures

Sl. No.	Description	Tolerance
1.	Deviation of structure at foundation top level w.r.t. true axis	
a.	in longitudinal direction.	± 5mm.
b.	In lateral direction.	± 5mm.
2.	Deviation in the level of bearing surface of structures at foundation top w.r.t. true level.	± 5mm.
3.	Out of plumb of structure from true vertical axis and measured from structure top.	$\pm H/1000$ or ±25mm. Whichever is less.
Note:	'H' above is the structure height in mm.	

Notes:

1. The tolerances do not apply to steel structures where deviations from true positions are intimately linked or directly influenced by technological processes. In such cases, tolerances on erected steel structures shall be as per recommendations of process technologists/equipment suppliers.
2. The observed or calculated values of deviations of steel structures from their true positions shall be rounded off in accordance with IS:2-1960 for comparison with permissible tolerances specified in this table. The number of significant places retained in the rounded off value shall be the same as that specified in this table.

Annexure-D
Material of construction (as applicable)

1.0 Unless otherwise specified in the drawing, the material for all rolled sections and plates shall conform to Grade- E 250 min. or higher as per IS: 2062-2011.

2.0 Rolled profiles of NPB (Narrow Parallel Flange Beams) & WPB (Wide parallel flange beams) shall confirm to IS:12778-2004.

3.0 Steel tubes for structural purposes shall conform to IS: 1161-2014 (Grade Yst-310).

4.0 Hollow steel sections shall conform to IS 4923:2017.

5.0 Crane rails (CR-80) shall conform to IS:3443 including fixing on crane girder as per tender drawing.

6.0 Anchor bolts shall conform to IS 2062 / SAE 1018 with minimum yield strength of 250 MPa. Nuts and lock nuts shall conform to IS 1363(part 1 to 3) and washer shall conform to IS: 2016.

7.0 Expanded metal steel sheets shall conform to IS 412:2017.

8.0 **0.5mm TCT** Zincalume high tensile colour coated steel sheets (fy=550MPa) conforming to IS:15961 having trapezoidal profile with a cover width of 930-1020 mm and 28-32 mm deep crest at pitch of 186-250mmc/c with minimum two ribs at centre for stiffening. With zincalume coating 150gsm. The sheet shall have a total coating thickness of 35 micron,super durable polyester colorbond XRW quality paint system of 20 microns on exposed surface and 5 micron reverse polyester coat on back surface over 5 micron primer coat on both side surface as per IS:15965. The paint system should have stable resin & inorganic pigments for paint durability and lead free for water harvesting The sheet shall have anti-capillary groove to avoid any seepage of water through lateral over lap, compatible flashing, Trims, ridge panel, curved panel, canopy soffit closure, canopy gutter, down take pipe, closers fittings and fixtures, accessories, sealing tape etc, including transportation and delivery at site, storage and handling at site, cutting and bending of sheets to required shapes and sizes and erecting them on roof and sides using self-drilling, self-tapping fasteners which shall be hot dip galvanized with Xylon coated with EPDM Seals conforming to AS: 3566 class 3 with colour coated to match sheet panel at proper position. Roof sheet shall be laid in combination of colours as per approved colours scheme. The sheet shall have brand marking of the manufacture giving product details on the back of the sheet at regular interval confirming genuinity of the material. All works shall be completed in all respect as per specification, scope and description of works and as per direction of the Engineer-In-Charge. Mode of measurement shall be total covering area of sheeting. Lapping of sheets, ridges and flashes shall not be paid extra.

9.0 Polycarbonate sheets shall be 3mm thick of profile matching with adjacent sheeting and shall conform to IS:14443:1997.

10.0 Turbo ventilators 600mm diameter wind driven made of aluminium / stainless steel including 3 mm thk FRP Base with gel coating, profile shall be match with steel sheet, confirming to Data Sheet for Wind driven Ventilator.

11.0 Self-drilling, self-tapping fasteners shall be Xylon coated with EPDM seals conforming to AS:3566 class III for external fixing and galvanised fasteners with EPDM Seals for internal fixing washers, sealants, neoprene fillers etc. Fasteners shall be colour coated to match roof and wall panel.

12.0 All black hexagonal bolts, nuts and lock nuts shall conform to IS: 1363-2002 and IS: 1364-2002 (for precision and semi- precision hexagonal bolts). Washers shall conform to IS: 1148-1982.

13.0 Covered electrodes for arc welding shall conform to IS: 814-2004. Coding of electrodes shall be as follows:

a. ER 421 'C' x for mild steel of Grade A and Grade B as per IS: 2062-2011.

b. EB 542 'C' x H3X for:

I. Mild steel of Grade B as per IS: 2062-2011 for dynamically loaded structures (arising out of crane, vibratory screen, equipment, etc.),
II. SAIL-MA micro alloyed steel 350 HYA/HYB and
III. When combined thickness (CT) for steel conforming to IS:2062-2011 exceeds 40mm where ‘C’ is the value of current as recommended by the electrode manufacturer.

14.0 Material for chain link fencing shall conform to IS:2721-2003. Mesh for chain link fencing shall be of 3.15mm hot dip galvanized steel mesh wire, the diameter being measured over zinc coating. The diameter of mesh wire shall not vary from the specified diameter by more than 0.05mm. The material for mesh wire and line wire of chain link fencing shall conform to IS:280-2015. Stretcher bar for erection of mesh shall consist of mild steel flats 25mmx4.75mm. The stirrup wire for securing the line wires to the intermediate post shall be of 2.5mm mild steel wire. Hairpin staples for fastening the bottom-line wire to the foundation concrete shall be of 6mm mild steel wire with ends of staples bent outwards for adequate anchorage. The cleats for eyebolts shall be of mild steel plate 10mm thick.

15.0 **Material** for barbed wire shall conform to IS:278-2015. Line wire for the barbed wire shall be made from two strands of galvanized steel wire of nominal dia 2.5mm twisted together. Barbs shall be made of point wire of galvanized steel of nominal dia 2.5mm in such a way that four points of the barbs are set and located or locked as far as possible at right angles to each other. Droppers for barbed wire shall be of mild steel flat 25mmx4.75mm with 38mmx4.85mm half round staples for fastening the barbed wire.

16.0 All HSFG bolts shall conform to IS: 3757-1985.

Annexure-E

LIST OF PREFFERED MAKES FOR STEEL STRUCTURAL WORKS

Preferred makes of materials to be used in the work are as given in the table below. In case of non-availability of these makes, the Engineer-in-charge may allow use of alternative makes after seeking approval through Concession/Deviation Request Form. Only BIS marked materials shall be generally used in the work.

Sl. No.	MATERIAL	PREFERRED MAKES/ BRANDS/ MANUFACTURERS
1	STRUCTURAL STEEL	SAIL, RINL, TATA STEEL, AM/NS-INDIA, JINDAL STEEL LIMITED, JSW-STEEL
2	STRUCTURAL STEEL TUBES	TATA STEEL, JINDAL STEEL LIMITED, SURYA ROSHNI LIMITED, APL APOLLO TUBES LIMITED.
3	ZINCALUME COLOUR COATED STEEL SHEET (COIL MANUFACTURES)	TATA STEEL COLORS, JSW STEEL LTD., AM/NS-INDIA
4	PAINT	ASIAN PAINT, KANSAI NEROLAC PAINT, BERGER PAINTS,
5	WIND DRIVEN AIR VENTILATORS	MUKTA ENGINEERS (MUMBAI), POWER CHEM PLAST LIMITED, SVS WIND DRIVEN TURBO VENTILATOR (AHMADNAGAR), REAL GREEN ENGINEERS PVT.LTD. (BANGALORE), SUN GREEN VENTILATION SYSTEM PVT.LTD. (MYLAPORE-CHENNAI), CITADEL (MUMBAI), MULTI COLOUR, ANCHIT ISPAT PVT LTD. (FARIDABAD), SHIV SHAKTI FIBRE UDYOG
6	ELECTRODES	GEE, ADOR (ADVANI ORLIKON), D&H INDIA, D & H (SECHERON), ESAB
7	POLYCARBONATE SHEET	SABIC INNOVATIVE PLASTIC, SHIV SHAKTI FIBRE UDYOG, POWER CHEM PLAST LTD, VMI PLASTIC, KAPOOR PLASTIC
8	METAL DECK PROFILE SHEET	TATA STEEL COLORS, JSW STRUCTURAL METAL DECKING LIMITED

Notes -

1. In case the items listed above are not available in the market or in case of change in trade name, equivalent makes/ re-designated manufacturer shall be used with prior approval of Engineer-in-charge.
2. Any materials not fully specified in this specification and which may be offered for use in the works shall be subject to approval of Engineer-in-charge.

In case of some items not covered in this list like fasteners, fixtures etc. may be procured form market conforming to IS codes

TECHNICAL SPECIFICATION FOR ARCHITECTURAL WORKS

TECHNICAL SPECIFICATION FOR PORTA CABIN AT DT LEPETKATA LOCATED INSIDE BCPL LEPETKATA

SCOPE OF WORK

Requirement of Porta cabin to be approved by M/s MECON Ltd engaged by M/s IGGL India to carry out project management consultant (PMC) for setting up of manufacturing plant with civil infrastructure and plant & machineries at Duliajan feeder line.

The scope of work includes transportation including unloading and installation at site Porta Cabins of following clear inside dimensions and technical specifications as detailed below:

Porte Cabin (approx.)–13.0 m (L) x 5.0 m (W) x 3.0 m (H) consists of Control room, Electrical room, Battery room and Fire Fighting room.

The porta cabin shall have provisions of installation of air conditioning, mounted electrical work and required furniture.
No leakages, seepages through walls, roof shall be permitted. All joints between wall panels, roof level shall be properly sealed by the successful bidder after erection of walls to avoid ingress of water/insects/reptiles etc.
Pre-fabricated porta cabins comprising of MS structure, walls, roof, doors/ windows, chajja / canopy, flooring, ceiling, electrical installations, furniture, plumbing works are part of successful bidder's scope of work.

TECHNICAL SPECIFICATION

1.0 FLOOR

Base frame shall be as per structural TS.

The floor shall be covered with cement fiber board of 18-20mm thickness fixed with fasteners and finished neatly with:

- 600 mm X 600 mm vitrified tiles in Control Room.
- 300 mm X 300 mm Acid resistance tiles in Battery room.
- 600 mm X 600 mm Heavy duty vitrified tiles in FF room and Electrical room.

2.0 WALLS

Wall frame, outer finish and insulation shall be as per structural TS.

All partition walls shall have 9 mm thick pre-laminated MDF boards duly supported by structural steel members.

.

3.0 ROOF

Roof frame, outer finish and insulation shall be as per structural TS.

Roof shall be connected with uPVC rain water down take pipes which shall be connected to nearest drain.

Acrylic Emulsion paint coated in FF Room, Battery room and Electrical room.
False ceiling in Control room

4.0 WINDOWS AND DOORS

DOORS - Anodized/Powder coated Aluminum doors with partly glazed portion (from lock rail level to top rail with toughened glass) and partly with cement bonded / prelaminated /particle board

WINDOWS- Anodized/Powder coated Aluminum Window using nut/bolts.

5.0 FURNITURE

- Office Table
- Officer Table
- Officer Chair
- Chairs.

TECHNICAL SPECIFICATION FOR INSTRUMENTATION WORKS

SPECIFICATION

FOR

INSTALLATION OF INSTRUMENTS

SPECIFICATION NO.: MEC/S/05/26/01

ELECTRICAL & INSTRUMENTATION
(OIL & GAS SBU)
MECON LIMITED
DELHI 110 092

0	15.10.2014			
Revision	Date	Ratnadeep Gupta	Vikas Jain	Rakesh Kr. Shukla
		Prepared By	Checked By	Approved By

AMENDMENT STATUS

Sl. No.	Clause / Paragraph / Annexure / Exhibit / Drawing Amended	Page No.	Revision	Date	By (Name)	Verified (Name)

CONTENTS

1) SCOPE

2) STANDARDS OF MATERIALS

3) INSTALLATION OF INSTRUMENTS

4) TESTING

5) CALIBRATION OF INSTRUMENTS

INSTALLATION, TESTING AND CALIBRATION OF INSTRUMENTATION AND CONTROL SYSTEM

1.0 SCOPE

1.1 The purpose of this specification is to define the general requirements for the installation, installation materials, testing and calibration of instruments and control system.

1.2 The work shall be carried out in accordance with the codes, standards and recommended practice listed in this specification and in accordance with local `Statutory regulations'.

1.3 For installation of instruments and control system, of the new material where quality is of the prescribed standards and which is in every way fit for its intended purpose shall be used.

1.4 Unless otherwise specified all the materials shall be indicated in this specification except where it is not compatible with fluids being handled. In such cases the selection of the material shall be approved by MECON.

1.5 Only the best trade practices shall be used. All the work shall be carried out in a neat, workman like manner and to the satisfaction of MECON.

2.0 STANDARDS OF MATERIALS

2.1 Instrument process piping / tubing upto and including the first block valve and `in-line' instrument equipment shall conform to the line class or vessel rating concerned instrument piping or tubing after the first lock valve may use alternate materials consistent with service conditions. In general they shall conform to the following specification as a minimum.

2.1.1 Stainless tubes shall be fully annealed and cold drawn seam less as per ASTM A 269 TP316 with size 1/2"OD x 0.65" WT (wall thickness).

2.1.2 Monel tubing shall be fully annealed seamless as per ASTM B165 with size 1/2" OD x 0.35"WT.

2.1.3 Carbon steel pipe shall be 1/2" seamless and shall be as per ASTM A106 Gr B min of sch 80 & dimensions as per ANSI B36.10.

2.1.4 Seamless stainless steel pipes shall be as per ASTM A 312 Gr TP 316L Sch 80S, dimensions as per ANSI B 36.19.

2.1.5 Instrument air supply piping from the main instrument air header shall be galvanised heavy class pipes to IS 1239.

2.2 Individual pneumatic signal and air supply tubing shall conform to the following specifications:

2.2.1 Stainless tubes shall be used in general and shall be fully annealed and cold drawn seamless as per ASTM A269 TP 316 with 6mmOD x 1mmWT.

2.2.2 Copper tubing where specified shall be seamless 6mmOD x 1.0mmWT soft annealed as per ASTM 868.74a cd No. 122 (DHP) sheathed with PVC 1.0mm thick coloured Black.

2.3 All fittings shall be as a minimum of 100 rating except for tube fittings. The fittings shall have threading as per B2.1 and socket weld connections as per B 16.11. These shall conform to the following specifications in general.

2.3.1 Tube fittings shall be flare type compression fittings Swagelok or equivalents make double ferrule and pressure seat type.

All tube fittings in impulse lines shall be rated to 5000 PSIG at 38°C.

2.3.2 Carbon steel pipe fittings shall be forged as per ASTM A105 stainless steel pipe fittings shall be as per ASTM –182 Grf 316L

2.4 Valve shall have normally Globe body and shall be fabricated out of Bar-stock and rated to min. of 1500. These shall be screwed bonnet type with 13% GSS trim and plug shall be integral with the stem. Face to face dimensions shall be approx. 80mm. End connections shall be socket weld to ANSI 16.11 and threaded to B2.1

2.5 Multibore tubing shall have a maximum 19 single polyethylene tubes, 6mmOD x 1mm numbered for easy identification. The bundle shall be marked with inner and outer fire resistance PVC sheath. They shall carry a pair of telephone wire 0.6mm diameter flexible.

2.6 Single pair and multi pair extension cables for Thermocouples shall be matched and calibrated in accordance with ISA MC 96.1. Conductor size shall be AWG for single pair and 20 A for Multipair.

The cable shall be armoured, each twisted pair shall be individually shielded with aluminium Mylar tape and a tinned copper drain wire. The wires and the cable shall be colour coded as per ISA recommended practices.

2.7 Instrument Electrical cables shall conform to the following specifications:

2.7.1 Instrument electronic signal cables single pair/ Multipair shall have copper conductor, twisted in pair and individually shielded with Aluminium Mylar tape with drain wire. In multipair cables, each pair shall be armoured with inner and cut PVC sheath. Minimum conductor size shall be 1.5 mm^2.

2.7.2 Control Cables for control signal, alarms actuating devices and solenoid valves of the interlock and shutdown valves shall generally be 1.5 mm^2 copper conductors armoured with inner and cut PVC sheath.

2.7.3 All power supply cables shall have copper/Aluminium conductor depending upon the conductor size. The cables shall be armoured with inner and cut PVC sheath. The cables shall be sized adequately. Minimum conductor size shall be 2.5 mm^2.

2.7.4 2-core armoured cable shall be used for illuminator on level gauges.

2.7.5 The material and construction of all electrical cables shall conform to IS- 1554 Part I or appropriate equivalent code and standard.

3.0 INSTALLATION OF INSTRUMENTS

3.1 Instrument Mounting

3.1.1 No instrument shall be installed in such a way that it bends for support on the impulse piping or electrical connection on it.

3.1.2 Pressure gauges and temperature indicator shall normally be mounted directly on line. However direct on line mounting shall be avoided where vibrations are likely to be present.

3.1.3 Local mounted instruments shall be mounted on brackets, panels or placed on a suitable pedestal. Transmitters shall be mounted on 2" pipe supports where practical. Instruments to be mounted on steel columns, masonary structure etc. These shall not be mounted on heating equipments, pipelines and structures.

3.1.4 Blind transmitters shall be mounted at 130mm above graded platform. Local controllers, indicating transmitters and indicating instruments shall be mounted at approximately 1500 mm.

3.1.5 All the instruments shall be accessible from grade, ladder or platform etc. Pressures gauges and other local indicating instruments shall be readable from grade or operating level and if used for manual control shall be visible from the related valve.

All the instruments shall be located such that they don't impede the process operation.

3.1.6 Local mounted instruments which are not available in weather proof housing shall be mounted inside a weather proof case.

3.1.7 Items such as pilot valves, solenoid valves etc. shall be located local to its point of application or near to the device being actuated by them.

3.1.8 For blind transmitters output meters shall be mounted on instrument supports.

3.1.9 Filter regulators shall be mounted on the instrument supports below pneumatic transmitter or on the control valve yoke.

3.1.10 Instruments or instrument lines shall not be supported on hand rails, in general.

3.1.11 The use of process piping to support instrument lines shall be avoided as far as possible.

3.1.12 The instrument impulse piping shall be kept as short as possible.

3.1.13 Instruments and impulse lines shall be protected against mechanical damage.

3.1.14 In case of capillary tube instruments, capillary tube is to be supported and protected against mechanical damage.

3.1.15 Orifice meters shall not be installed on the top of orifice fittings. On horizontal lines orifice pressure taps shall be located as follows:

a) On top for air and gas service
b) Horizontal for liquid and condensible vapour service.

3.2 Instrument Piping & Tubing.

3.2.1 Impulse Piping/tubing

3.2.1.1 The primary instrument block valves for all instruments shall be as per piping specifications.

3.2.1.23-Valve manifold in general shall be integral type. For pressure gauges, 2-valve manifolds shall also be acceptable instead of isolation valve, drain valve and pipe fittings.

3.2.1.3Differential or static pressure sensing lines shall not exceed 6 mtrs. (20 feet) in general for direct connected or locally mounted instruments.

3.2.1.4 All impulse lines shall be run with a slope not less than 1 in 12 except where otherwise specified. Direction of slope is to be downward from the process for liquid service and upward from the process for gas service.

3.2.1.5 Tubing shall be joined by compression fittings.

3.2.1.6 Piping shall be joined by pipe fittings/flanges as per the piping specifications.

3.2.1.7 All instruments pipes and tubes shall run in horizontal and vertical planes only and shall run with minimum number of changes in direction, consistent with good engineering practices and neat appearance.

3.2.1.8 Tubing shall be bent with correct size tube bender as far as possible to avoid use of fittings. Hot bending shall be totally avoided.

Tube cutter shall always be used to cut tubing. The use of short lengths of tubing in long runs shall be avoided in order to avoid the fittings.

3.2.1.9 All tubing shall run in such a manner as to give the maximum protection against mechanical damage. Tubing runs shall be grouped together and clamped.

3.2.1.10 Tubing shall be arranged so that the unions can be tightened without distorting lines.

3.2.1.11 Instrument tubing or piping shall not run on trays intended for cables and shall not share the same transit.

3.2.1.12 No pipe or tube shall be left with mechanical strain on them.

3.2.1.13 A mechanical ferrule seater shall be used on tubing for 140 kg/cm^2 (2000 psi) or more.

3.2.1.14 Pipe bushings shall not be used.

3.2.1.15 Pipe plugs shall be fabricated out of bar stock and shall have hex-head.

3.2.2 Air/Signal Tubing

3.2.2.1 Signal Transmission tubes shall be laid on perforated trays prefabricated out of min 2.5 mm. thick steel plates. The width of the tray shall be selected as per the number of tubes to be laid.

3.2.2.2 Where tubing is run in permanent enclosures, it should be ensured that entry and exit of such enclosures is clean and smooth.

3.2.2.3 Tubing run in permanent enclosures shall not have joints, except at special junctions boxes provided for this purpose.

3.2.2.4 Where permanent enclosures are left with space for instrument tubing to be laid at some later date, a galvanised pull wire of adequate size shall be left in the tray.

3.2.2.5 Where the length of transmission tubing exceeds 60 mtrs (200ft) necessity of installing signal booster relays shall be considered.

3.2.2.6 In case of `Skidded' equipment or vessels with instrumentation, where off- skid alarms shutdown or control functions are provided the signal tubes shall be terminated on the control bulk head near the skid boundary.

3.2.3 All threaded pipe joints shall be joined after applying Teflon tape. It should be applied in a manner to ensure that the tape does not spill over the end of the male fitting. No other pipe joining compound shall be used except on high temperature service where graphite sealing compounds shall be used.

3.2.4 All reasonable precautions shall be taken to prevent foreign materials entering pipe lines or tubing before and during erection.

3.2.5 Pipes and tubes installed but not connected, shall have the ends clad in approved fashion to prevent the entry of foreign material. For a period upto one week adhesive tape may be used, for longer periods, caps or plugs shall be used.

3.2.6 Piping/Tubing supports

3.2.6.1 Piping and tubing shall be adequately supported and fixed at a distance not exceeding that in the following table:

Table

Single tubing/Piping	Max. distance between supports
3/8" OD or less	Continuous
1/2" to 3/4" Nom. size	2 meters (6ft.)
3/4" to 1" Nom. size	3 meters (9ft.)
Multitube bundle	3 meters (9ft)

3.2.6.2 All field mounted instrument air tubing shall be supported with galvanised steel angles or channels of minimum 1/8" thickness fabricated to present neat appearance.

3.2.6.3 All instruments tubing supports shall be galvanised prior to installation

3.2.6.4 Trays shall be properly supported either from any rigid steel structure or concrete member. In case of non-availability of above, a suitable support shall be fabricated.

3.3 Instrument Air Supply Distribution

3.3.1 Piping material for instrument main and branched air headers upto the isolation valve at each take-off from main or branch header shall conform to piping specification.

3.3.2 The air header size shall be established in accordance with the table below, unless otherwise specified, for a header pressure of 4 to 8.5 kg/cm^2

Table – 2

Max number of users	Nominal pipe size
upto 5	1/2"
upto 10	3/4"
upto 25	1"
upto 80	1-1/2"
upto 150	2"
upto 500	3"

3.2.3 All take off for branch lines are to be from the top of the main header with block valves equal in size to the branch line. All low point shall have a 1/2" valve installed as a drain and blow down point.

3.3.4 A minimum size of ½" pipe shall be run to the instrument with a ½" valve for each user. Tubing from the isolation valve to the instrument shall be 6.0 mm.

3.2.5 Union shall be provided at convenient location in the air header.

3.3.6 Filter regulator shall be provided for individual field mounted consumer and shall be complete with an output gauge.

3.3.7 In case of skid mounted equipments or vessels which incorporate instrumentation requiring pneumatic supply, on skid supply piping shall terminate at the skid boundary location and size of the supply connections shall be noted on the vendor approval drawings.

3.4 Installation of multitude and Multicore cables.

3.4.1 Multicore/ Multitube cables shall generally be installed on trays or ducts and properly clamped. At bends minimum radius shall be maintained as per cable manufacturer's standards.

3.4.2 All cables shall be rigidly supported on structural steel and masonary. Drilling of steel member should normally be avoided. However, if the drilling of steel must be resorted to, it must be drilled where minimum of weakening of structure will result cables shall be support at every 500 mm. At every vertical drop these shall be clamped at more frequent intervals max of 300 mm.

3.4.3 Directly buried cables shall be laid underground in excavated cable trenches. Trenches shall have sufficient depth and width to accommodate all cables correctly spaced and arranged with a view of heat dissipation and economy of design construction of trenches laying of cables and filling up of trenches shall be as per relevant standard.

3.4.4 Each underground cable shall be provided with identifying tag of load securely fastened every 30 M of its underground length with at least one tag at each end before the cable enters the ground.

Before cables are placed, the trench bottom shall be filled with a layer of sand. The cables shall be covered with 150 mm of sand on the top of the largest dia. cable tube and sand shall be lightly pressed. A protective covering of 75 mm thick second class red bricks shall be laid flat and the balance portion of the trench shall be filled with soil, compacted and levelled.

3.4.5 At each road crossing and other places where cables enter pipe sleeves, adequate bed of sand shall be given so that the cables don't slack and get damaged by pipe ends after back filling.

3.4.6 At the entry into concrete blocks loops shall be provided at either end to prevent any damage to cable.

3.4.7 The cable entry to control room shall be suitably filled and sealed after laying of cables so as to achieve a positive sealing against the entry of gas/water.

3.4.8 All wiring, tubing, cables, Junctions boxes and auxiliary equivalent shall be suitably identified as per applicable codes and practices. All piping and tubing shall be tagged with slip-on or clip on wire marker at both ends.

3.4.9 Jointing of cables is generally not permitted. Cables shall be cut after the exact site measurements at the cable drums shall be so selected before cutting the lengths as to avoid any unnecessary wastage.

3.4.10 Low signal cables like alarms, analysers cables, special cables for turbine meter, thermocouple compensating cables etc. shall be layed separated from power supply cables in ducts/trenches/trays.

3.4.11 Electric signal lines for electronic transmitters to receive and to final control element shall be continuously shielded with the shield grounded at the same point as the signal circuit generally at the control instrument.

3.4.12 Separate junction boxes shall be used for intrinsically sage cables.

3.4.13 Different intrinsically safe system e.g., systems having different rounds shall not be run in the same multicore cable, in general.

Recommended minimum separation distance between twisted pair signal leads and AC Power Lines.

AC Power Cable		Minimum Distance to Signal Lead
Voltage (Volts)	Current (Am)	in (cm)
0 to 125	0 to 10	12" (30)
125 to 250	0 to 50	15" (38)
250 to 440	0 to 200	18" (46)
5KV & Up	200 Amp. & Up	24" (61)

Different intrinsically safe circuits e.g., circuits having different voltage levels, of the same intrinsically safe system shall not be run in the same cable unless each conductor insulation is at least 0.25mm or no hazard can result from interconnection.

3.4.14 The physical separation of power and signal cables shall be as per API 550 Part I Section VII. Cable in intrinsically safe circuits shall preferably be not run in the same tray where-- on intrinsically safe circuits cables are being run. If these are being run in the same tray, a metallic earthed separately shall be provided.

3.4.15 For temperature controllers, single pair thermocouple extension cable or cable for resistance thermometer, shall be layed directly from the element to the transducer in the control room without intermediate terminal blocks.

3.4.16 In case of skid mounted equipment or equipment which incorporate skid instrumentation like alarms, shutdown or control function shall terminate signals or control junction box near skid boundary for connection of off skid equipment.

3.4.17 No wire shall be terminated or left with mechanical strain within any conductor.

3.4.18 Splices shall be made only at terminals, in instruments or approval equipment/ junction boxes using lugs and screwed connections. No intermediate splices shall be made in cable trays or in conduct. Number of junction boxes in any cable path shall be limited to only one.

3.5 Installation of Zener barriers

3.5.1 Zener barriers shall be installed in the circuit to make the system intrinsically safe provided:

a) There is no energy storage system in excess to the minimum permitted by the barrier design on the hazardous side of the barrier. The same shall be met by taking intrinsically safe transmitters and selecting the cable electrical parameters like inductance L/R ratio & capacitance in accordance with the maximum parameters given in barrier specifications.

b) No power source exceeding the voltage rating of Zener barrier shall be connected on safe side of the Zener barrier.

c) No outside power source including other intrinsically safe circuits shall be connected to the hazardous side of the barrier.

3.5.2 Zener barriers shall be located as close as possible to the field wiring entry point in the control room.

3.5.3 Single barrier are bolted directly to copper bus bar and multiple barriers on the barrier mounting plates. Copper bus or barriers mounting plates shall be isolated from the panel frame.

3.5.4 The signal ground system for intrinsically safe system shall be separate from power ground system and shall be connected to the signal ground reference point. The maximum resistance allocable between the farthest point on intrinsically safe barrier ground bus and signal ground reference point shall be less than 1 ohm.

3.5.5 Field wires shall directly terminate at the barriers and not through intermediate terminals.

3.6 Installation of Analyser / Gas Chromatograph

3.6.1 Installation of all analyser shall be in general, as per APIP 550 Part II.

3.6.2 The analyser housing at its installation shall meet all safety requirements as per classifications.

3.6.3 Sampled process fluid, if not returned to the process shall be disposed to a safe location. Piping shall be provided so that vapours can be vented to a safe location and liquids shall be drained in a clean and orderly fashion to a safe place. Toxic vapours shall not be vented to atmosphere.

3.6.4 Analyser shall be located as near to the sampling point as possible.

3.6.5 Analyser equipment must be protected from the following:

a) Hot equipment
b) Severe ambient temperature changes
c) Shock
d) Mechanical damage
e) Vibration

3.6.6 If a separate vent for the analyser is used, the location of that vent shall be in area of minimum air Turbulence. If the vents of different analysers are vented into a common vent, a back pressure regulator shall be used.

3.6.7 Vent piping shall be designed to prevent condensate from accumulation in low point and obstruct a free vent flow.

3.7 Ducts, Trays and Supports

3.7.1 Main cable duct shall be of bottom open type with flat/angle --- construction with side sheet and top cover of 3.2 mm thickness.

3.7.2 The ducts and trays shall be properly supported at regular intervals. Wherever insert plates are not available, support on concrete structure or ceiling shall be fixed with a minimum of 10 mm expansion bolts Angle supports for ducts shall be fabricated from minimum of 40 mm angle.

3.7.3 All supports shall be neatly cut with hacksaw only and not with gas cutting. Free ends of angle supports shall not have sharp ends and shall be properly rounded off.

3.7.4 Ducts and supports shall be painted with one coat of Red oxide Zinc chromate primer conforming to IS-2074 after cleaning to remove scale and then painted with

2 coats of final enamel paint as given below:

a) Duct - Dark admirately Grey as per IS0632.
b) Supports - Black.

3.8 Instrument Steam Tracing

3.8.1 Steam for Tracking of instruments shall be taken from main steam header take of valve through carbon steel pipes supported at regular intervals.

3.8.2 Steam tracing around individual instrument shall be by copper tube of 1/8" diameter.

3.8.3 Piping or tubing for steam tracing shall be installed in such a way as to avoid condensate pockets.

3.8.4 After steam tracing, the line is connected to drain funnel through steam trap.

3.9 Identification of Lines and Instruments

3.9.1 All site mounted instruments, junction boxes, air headers, tubing and wiring terminations shall be labelled or tagged.

3.9.2 Instruments shall be furnished with stainless steel name tags containing Tag no., manufacturer's name, and model no. serial number. This tag number shall be approximately 3"x1" size and shall be attached to the instruments with -- gauge stainless steel wire.

3.9.3 Unused cable entries in junction boxes and field instruments are to be plugged.

4.0 TESTING

4.1 Instrument Impulse piping/Tubing

4.1.1 All process impulse lines shall be disconnected both from the instrument and vessel/piping end and flushed with water.

4.1.2 After thorough flushing the impulse lines shall be isolated from the instruments and pressurised hydraulically to 1.5 times the maximum working pressure corrected for ambient temperature. They shall then be isolated from the pressure source and the pressure reading on a test pressure gauge shall not fall at a rate exceeding one psig/hour.

In case no isolation valve is provided near the instrument, impulse piping/tubing shall be pressurised along with the instrument to the maximum pressure of scale in case of pressure transmitter and max. Operating pressure in case of differential

pressure instrument with equalising valve open

4.1.3 In special conditions where hydro- testing is not permissible due to service requirements, testing shall be carried out by using compressed air/nitrogen.

4.1.4 The external displacer type instruments and cage type level switches shall be tested to 1.5 times the operating pressure using air/nitrogen after thorough flushing.

4.2 Instrument Air lines/signal tubing.

4.2.1 Instrument air lines/signal tubing shall not be hydrostatically tested.

4.2.2 Instrument air tubing shall be disconnected upstream of all filter regulators and blown down to remove water, slag and mill scale, from lines at 7.0 kg/cm^2 G for fifteen minutes.

Air filter shall be taken in line and tubing shall be disconnected at instrument end, and blown for 3 minutes to remove traces of dirt.

4.2.3 Testing of instrument air shall be carried out with instrument air at 7 kg/cm^{2}G upto the upstream of the filter regulator after thorough flushing. All lines shall be checked with soap solution and bubbler unit for possible leak at joints.

4.2.4 All signal tubing shall be checked with 1.5 kg/cm^2 after proper flushing. After pressuring, source shall be cut off and rate of fall in pressure shall be less than IPSL for each 100 feet of tubing for a test period of 2 minutes as per instrument society of American RP 7.1 `Pneumatic Control Circuit Pressure Test'

4.3 Cables

4.3.1 All wiring shall be checked to ensure that it is correctly connected and properly grounded.

4.3.2 All cables shall be checked for continuity proper connection and insulation testing.

Insulation test shall be carried out on all wiring with a certified magger after disconnecting the cables at both ends.

4.4 All the results of the above mentioned testing shall be recorded and submitted for check.

4.5 All the in line instruments like orifice plates, turbine meters, Rotameters, Target meters, vortex meters, control valves, safety valves etc. shall be removed and

spool pieces shall be provided prior to the flushing of the lines.

5.0 CALIBRATION OF INSTRUMENTS

5.1 All instruments shall be calibrated strictly as per manufacturer's instructions prior to the installation. In addition to calibration of instruments, setting of safety devices like process switches, safety valves etc. and simulation testing of all interlock and shutdown system shall be carried out.

5.2 In general, all tests shall simulate, as closely as possible, design process condition by the use of manometers, potentiometers, deadweight testers, test pressure gauges etc. Pour point calibration shall refer to the input signal to an instrument equivalent to 0, 25, 50, 75,100% of instrument range upscale (rising) and 75, 50, 25, 0% of instrument (downscale) (falling).

All instruments unless otherwise noted shall be calibrated in upscale and downscale direction and if necessary, adjusted until their accuracies conform to those limits state by the manufacturer.

Upon completion of these tests, the instruments shall be drained, completely.

5.3 Temperature Instruments

5.3.1 Temperature Gauges Filled type and Bi metallic dial type Thermometers shall be four point bench checked for proper operation and calibration using a temperature bath prior to installation.

5.3.2 Temperature Elements and Temperature Transmitters.

Temperature Elements and Transmitter shall be four point bench calibrated using a temperature bath precision meter or precision gauge prior to installation.

5.4 Pressure Instruments

5.4.1 Pressure Gauges

5.4.1.1 Direct connected bourdon type pressure gauges shall be dead weight tested or tested against a test gauges prior to installation.

5.4.1.2 Receiver type pressure gauges shall be four points calibrated using a precision gauge and precision air regulator.

5.4.1.3 Pressure and Differential Pressure Transmitters.

Pressure and differential pressure transmitters shall be four points calibrated using a hydraulic or dead weight tester or a precision pneumatic calibrator prior to the installation. A precision output meter or gauge shall be used to monitor the output.

5.5.1 Orifice plates shall be checked visually for the name plate and for an upstream sharp edge. Bore dia. shall be checked for compliance with the specification.

5.5.2 Differential pressure type of flow instruments shall be four points calibrated using precision pneumatic calibrator or a manometer and precision regulator. A precision output meter or gauge shall be used to monitor the output of the transmitter.

5.5.3 a) Rotameters shall be installed as received. A check shall be made to confirm that shipping stops have been removed and float has been installed.

b) Where rotameters have transmitting mechanism, the float shall be raised and lowered mechanically and output shall be checked. Vendor calibration data/ curve shall be checked.

C) A check shall be conducted with plumb for a vertical installation.

5.5.4 Turbine meters, Annubar, positive displacement meters, vortex meter, ultrasonic flow meter, etc. shall be installed as received.

5.5.5 Target meters shall be checked for calibration using calibration weights. Output shall be monitored using precision output meter.

5.6 Level Instruments

5.6.1 Level Gauge Glasses

Gauge glasses shall be installed as received installation of illuminators, frost protectors and other accessories shall be checked.

5.6.2 Displacer Type, Level Transmitter

- Displacer type level transmitter shall be checked by raising and lowering mechanically the displacement and checking the pilot or transmitter action. Check transmitter with out put gauge or meter for smooth and full output change.

- A check shall be conducted with plumb for a vertical installation.

5.6.3 Differential pressure type level transmitter Differential pressure type level transmitter shall be calibrated with pneumatic calibrator at four points prior to installation. A precision meter or gauge shall be used to monitor the output of the transmitter.

5.6.4 Tank level gauges

a) Tank level gauges shall be checked by raising and lowering mechanically the displacer and checking the indicator on the gauge board.

b) Check for proper liquid seal prior to installation in case of liquid seal tank gauges.

c) In case of servo type gauges, the displacer is hoisted from the tank into the calibration chamber.

5.7 Control Valves, shutdown valves and self actuated valves

5.7.1 All diaphragm and piston operated control valve shall be stroked pneumatically using a pressure regulator and pressure gauge against the spring range specified on the name plate of the valve.

5.7.2 Mechanical seating and travel of the valve stem shall be checked against the side indicator and the name plate

5.7.3 Valve positioner shall be calibrated with the control valve in accordance with the name plate data and specifications with the help of pneumatic calibrator or gauge with precision regulator. Zero position or fully close position of the valve shall be a live zero i.e., the plug shall be just off the seat at the minimum setting.

5.7.4 Volume bottles, where used shall be checked for proper filling. The signal line shall be bled to zero pressure and failure action shall be confirmed.

5.7.5 Control valve accessories such as handwheels, boosters, relays etc. shall be checked operationally. Declutch able handwheel shall be operable both with and without an air signal to the diaphragm.

5.7.6 Self actuated control valves shall be installed as received, checking inlet and outlet points and name plate data. Regulators with external pressure connections shall be inspected for proper installation.

5.7.7 Butterfly shall be checked carefully to see that the vane moves freely into the upstream and down stream piping. Proper vane movement to stroke shall be confirmed.

5.7.8 All control valves and regulators shall be removed from the line prior to flushing and during hydro testing.

5.8 Safety Relief Valves

5.8.1 Safety relief valves shall be installed as received after carefully checking the name plate data. Pilots, if used, shall be checked carefully for installation on the proper safety valve.

5.8.2 Valves, which are installed in such a manner as to permit on line testing, shall be pressure tested after installation to determine proper operation and setting. Compressed air or nitrogen shall be used for testing of safety relief valves.

5.9 Switches

5.9.1 Level Switches shall be actuated mechanically for switch operation but shall not be calibrated for level setting.

5.9.2 Pressure switches shall be calibrated using hydorlic or dead weight tester or precision air regulator and gauge. The setting/trip point shall be checked using a continuity tester.

5.9.3 Temperature switches shall be calibrated using a temperature both prior to installation and set to the required alarm/ trip point using a continuity tester.

5.10 Receiver Instruments

5.10.1 Receiver Indicator/Recorders

5.10.1.1 Pneumatic indicators/ Recorders shall be calibrated using pneumatic calibrator/ precision pressure regulator and gauge.

5.10.1.2 Electronics indicators/ Recorders shall be calibrated using a current generator and a precision meter.

5.10.1.3 Chart drive assembly shall be checked for proper operation.

5.10.2 Controllers

5.10.2.1 Proper balancing of the controller shall be checked as per the manufacturers catalogues.

5.10.2.2 Controllers shall be checked for manual and Auto operation and Transfer. The transfer from manual to Auto and vice versa shall be bumpless and smooth.

5.10.3.1 Manual loader station Output of the manual loader shall be checked with a precision meter.

5.10.4.1 Multipoint Temperature Recorders

Each point shall be calibrated using a temperature simulator/ decade box for RTD / voltage generator and precision meter for the thermocouples.

5.10.4.2 Point synchronisation shall be checked.

5.10.5 Pneumatic receiver switches shall be calibrated using precision air regulator and gauge. The setting/alarm/trip point shall be checked using continuity tester.

5.10.6 Trip Amplifiers Trip amplifiers shall be calibrated using a temperature simulators or voltage generator and precision meter for thermocouple or Resistance box for RTD's. The required setting/ alarm point/ trip point shall be checked using a continuity tester.

5.10.7 Receiver Switch module Receiver switch modules shall be calibrated using a current source and a precision meter. The required setting/alarm/trip point shall be checked using a continuity tester.

5.10.8 Alarm and Annunciator system

5.10.8.1 Alarm and annunciator system shall be checked for visual and audio alarm operation using dummy signals. Full alarm sequence of each alarm point shall be checked.

5.10.8.2 Each point shall be checked for proper engraving.

5.10.9 Shutdown System

5.10.9.1 Operation of final actuating elements shall be checked for proper operation using dummy signals.

5.10.9.2 All timers, push buttons and switches shall also be checked for their proper operation.

5.11 Analytical Instruments

5.11.1 Check the full analyser system including sample handling system for leakage.

5.11.2 Check the full sample handling system for its proper operation. Calibrate and check completely all analysers using zero and span samples as per vendor catalogues.

5.12 Flow computer / Volume corrector

5.12.1 Corrected flow values shall be checked for various D.C. inputs and pressure and temperature variations for upscale and downscale ranges.

5.13 The list of test and calibration instruments with traceability certificates shall be submitted to MECON for approval before carrying out the tests / calibration of instruments at site.

5.14 The formats / description of tests / calibration of all instruments shall be submitted to MECON for approval.

5.15 Daily / weekly reports shall be submitted during execution of work at site.

****

SPECIFICATION

FOR

INSTRUMENT TUBING

SPECIFICATION NO.: MEC/S/05/26/02

ELECTRICAL & INSTRUMENTATION
(OIL & GAS SBU)
MECON LIMITED
DELHI 110 092

0	15.10.2014			
Revision	Date	Ratnadeep Gupta	Vikas Jain	Rakesh Kr. Shukla
		Prepared By	Checked By	Approved By

AMENDMENT STATUS

Sl. No.	Clause / Paragraph / Annexure / Exhibit / Drawing Amended	Page No.	Revision	Date	By (Name)	Verified (Name)

CONTENTS

1.0 GENERAL

2.0 CONSTRUCTION

3.0 TESTING

4.0 SHIPPING

5.0 REJECTION

1.0 **GENERAL**

1.1 Scope

1.1 This standard specifications, together with the data sheets attached herewith, covers the requirements for the design, materials, testing and shipping of Instrument Tubing which includes the following types:-

a) SS tubes
b) Copper tubes

1.1.2 The related standards referred to herein and mentioned below shall be of the latest edition prior to the date of Purchaser's enquiry:

ASTM A 269	-	Specification for seamless and welded ferritic stainless steel tubing for general services.
ASTM B 251	-	Specification for general requirements for wrought seamless copper and copper alloy tube.
ASTM B 251M	-	Specification for general requirements for wrought seamless copper and copper alloy tube (Metric)
ASTM B 68	-	Specification for seamless copper tube, bright annealed.
ASTM B 68M	-	Specification for seamless copper tube, bright annealed. (Metric)

1.1.3 In the event of any conflict between these specifications, data sheets, related standards, codes, etc., the vendor shall refer the matter to the purchaser for clarifications and only after obtaining the same shall proceed with the manufacture of the items in question.

1.2 Bids

1.2.1 Vendor's quotation shall include a detailed specification sheet for each type of tube which shall provide the following information:

a) All the details regarding the type, construction, materials etc. of the items.
b) Overall the dimensions in mm.

1.2.2 All the units of measurement and material specifications for various parts in the vendor's specification sheets shall be to same standards as in purchaser's data sheets.

1.2.3 Vendor shall attach a list of items, type wise, summing up all the deviations from this specification and purchaser's data sheets if there are any. Also vendor shall provide reasons for these deviations.

1.2.4 Vendor shall enclose catalogues giving detailed technical specifications and other information for each type of tube in the bid.

1.2.5 Vendor's quotation, catalogues, drawings etc. shall be in English language.

1.3 Drawings, Data and Certification

Detailed drawings, data, catalogues and manuals etc. required from the vendor are indicated by the purchaser in vendor data requirement sheets. The required number of reproducible and prints shall be despatched to the address mentioned, adhering to the time limits indicated.

2.0 CONSTRUCTION

2.1 Stainless Steel Tubes

2.1.1 SS tubes of the tubes shall be Rockwell RB 70-70. Tubes shall be free from scratches and to be suitable for bending.

2.1.3 Tube wall thickness shall be 0.049" for 1/2" OD and 1mm for 6 mm unless otherwise specified.

2.1.4 Maximum working pressure shall be 153.0 kg/cm^2 at 38°C for 1/2" OD Tube, unless otherwise specified and 80.0 kg/cm^2 at 38° for 6mm OD tube.

2.1.5 Tubes shall be supplied in minimum length of 6 metres without brazing in between.

2.1.6 Dimensional tolerances shall be as per ASTM A 269.

2.1.7 The following shall be marked on the tube:

a) Name of manufacturer
b) Type and material grade of tube
c) Tube O.D. and wall thickness

2.2 Copper Tubes

2.2.1 Copper Tubes (PVC Jacket)

2.2.1.1 The tube shall be soft annealed copper with 6mm OD and a wall thickness of 1.0 mm as per ASTM B 68M Copper No.C12200.

2.2.1.2 The tube shall be jacketed with black PVC. The jacket thickness shall be 1.6mm. The PVC jacket shall confirm to ASTM D-1047.

2.2.1.3 The tube ends shall be plugged prior to transportation.

2.2.1.4 The tube shall be of continuous length without any brazing in between for 100 metres length.

2.2.1.5 Minimum length of single tube shall be 100 metres.

2.2.1.6 The dimensional tolerances shall be as per ASTM B 251M.

2.2.2 Bare Copper Tubes (For Steam Tracing)

2.2.2.1 The tube shall be soft annealed copper with 3/8" OD or 6mm OD with a wall thickness of 1.0 mm as per ASTM B68 copper No.C12200.

2.2.2.2 The tube ends shall be plugged prior to transportation.

2.2.2.3 The tube shall be of continuous length without any brazing in between for 100 metres length.

2.2.2.4 Minimum length of tube shall be 100 metres.

2.2.2.5 The dimensional tolerances shall be as per ASTM B 251.

3.0 TESTING

3.1 The following tests shall be done for SS tubes.

a) Hardness test
b) Hydrostatic test at 153.0 kg/cm^2 at 38° C for 1/2" tube and at 80.0 kg/cm^2 at 38°C for 6mm tube, unless otherwise specified.

3.2 PVC jacketed copper tubes shall be tested at 7.0kg/cm^{2}g with dry air for leak check.

3.3 Bare copper tubes shall be hydrostatically tested at 80.0 kg/cm^{2}g at 38°C.

3.4 Final test before delivery shall include ball test to ensure clear opening of the tube for copper tubes. The O.D of the ball shall be minimum 1mm for 6mm O.D tube and 2mm for 3/8" tube.

4.0 SHIPPING

4.1 The tubes shall be plugged at both ends to avoid entry of foreign matter. The tubes shall be packed carefully so as to avoid damage during transport.

5.0 REJECTION

Vendor shall make his offer in detail, with respect to every item of the purchaser's specifications. Any offer not conforming to this shall be summarily rejected.

SPECIFICATION

FOR

INSTRUMENT TUBE FITTINGS

SPECIFICATION NO.: MEC/S/05/26/04

ELECTRICAL & INSTRUMENTATION
(OIL & GAS SBU)
MECON LIMITED
DELHI 110 092

0	15.10.2014			
Revision	Date	Ratnadeep Gupta	Vikas Jain	Rakesh Kr. Shukla
		Prepared By	Checked By	Approved By

AMENDMENT STATUS

Sl. No.	Clause / Paragraph / Annexure / Exhibit / Drawing Amended	Page No.	Revision	Date	By (Name)	Verified (Name)

CONTENTS

1.0 GENERAL

2.0 CONSTRUCTION

3.0 TESTING

4.0 SHIPPING

5.0 REJECTION

1.0 GENERAL

1.1 Scope

1.1.1 This standard specifications, together with the data sheets attached herewith, covers the requirements for the design, materials, testing and shipping of instrument tube fittings which includes the following types:-

a) SS compression fittings (SS tube)
b) Brass compression fittings (copper tube)

1.1.2 The related standards referred to herein and mentioned below shall be of the latest edition prior to the date of Purchase's enquiry:

ANSI B 2.1	-	Pipe Threads
B16.11	-	Forged steel fittings-socket welding and threaded.
IS:319	-	Specification for free cutting brass bars, rods and sections.
ISA RP 42.1	-	Nomenclature for instrument tubing - fittings.

1.1.3 In the event of any conflict between these specifications, data sheets, related standards, codes etc., the vendor shall refer the matter to the purchaser for clarifications and only after obtaining the same shall proceed with the manufacture of the items in question.

1.2 Bids

1.2.1 Vendor's quotation shall include a detailed specification sheet for each type of tube fittings which shall provide the following information:

a) All the details regarding the type, construction, materials, etc. of the items.
b) Overall dimensions in mm.

1.2.2 All the units of measurement and material specifications for various parts in the vendor's specification sheets shall be to same standards as in purchaser's data sheets.

1.2.3 Vendor shall attach a list of items, typewise, summing up all the deviations from this specification and purchaser's data sheets if there are any. Also vendor shall provide reasons for these deviations.

1.2.4 Vendor shall enclose catalogues giving detailed technical specifications and other information for each type of fitting in the bid.

1.2.5 Vendor's quotation, catalogues, drawings, etc. shall be in English language.

1.3 Drawings, Data and Certification

Detailed drawings, data, catalogues and manuals etc., required from the vendor are indicated by the purchaser in vendor data requirement sheets. The required number of reproducibles and points shall be despatched to the address mentioned, adhering to the time limits indicated.

2.0 CONSTRUCTION

2.1 SS Tube fittings:

2.1.1 Nomenclature of all tube fittings shall be as per ISA RP 42.1.

2.1.2 Fittings shall be flareless compression type and of three piece construction with ferrule, nut and body suitable for use on SS tubes conforming to ASTM A 269 TP316, hardness not exceeding RB80.

2.1.3 All parts shall be of SS 316.

2.1.4 Hardness of the ferrules shall be in the range of RB 85-90 so as to ensure a minimum hardness difference of 5 to 10 between tube and fittings, for better sealing.

2.1.5 Nuts and ferrules of particular size shall be interchangeable for each type.

2.1.6 Spanner hold shall be metric.

2.1.7 Threaded ends of fittings shall be NPT as per ANSI B 2.1.

2.1.8 Copper Tube Fittings

2.2.1 Nomenclature of all tube fittings shall be as per ISA 42.1.

2.2.2 Fittings shall be of flareless compression type and of three-piece construction consisting of ferrule, nut and body suitable for use on copper tubes conforming to ASTM B 68/B 68M hardnesss not exceeding RB 50.

2.2.3 All parts shall be manufactured from Brass as per IS 319 barstock and Nickel plated.

2.2.4 For better grip, vendor shall maintain hardness difference between tube & ferrule and indicate the same along with the offer.

2.2.5 Nuts & ferrules of particular size shall be interchangeable for each type.

2.2.6 Threaded ends of fittings shall be NPT as per ANSI B 2.1.

2.2.7 Spanner hold shall be metric.

2.2.8 Vendor shall ensure that the ferrules and nuts supplied for fittings shall be suitable for sample tube which shall be supplied during manufacture.

3.0 TESTING

3.1 Random samples of SS tube fittings shall be hydrostatically tested as follows:-

For 6 mm fittings at 80.0 kg/cm^2, 1/2" fittings at 153.0 kg/cm^2 at 38°c unless otherwise specified.

3.2 Random samples of brass compression fittings shall be hydrostatically tested as follows:-

For 1/4" fittings, at 10 kg./cm^2, 3/8" at 80.0 Kg/cm^2 and all at 38°C.

4.0 SHIPPING

4.1 All thread/ends shall be protected with plastic caps to prevent damage/entry of foreign matter.

5.0 REJECTION

Vendor shall make his offer in detail, with respect to every item of the purchaser's specifications. Any offer not conforming to this shall be summarily rejected.

SPECIFICATION

FOR

INSTRUMENT VALVES AND MANIFOLDS

SPECIFICATION NO.: MEC/S/05/26/05

ELECTRICAL & INSTRUMENTATION
(OIL & GAS SBU)
MECON LIMITED
DELHI 110 092

0	15.10.2014			
Revision	Date	Ratnadeep Gupta	Vikas Jain	Rakesh Kr. Shukla
		Prepared By	Checked By	Approved By

AMENDMENT STATUS

Sl. No.	Clause / Paragraph / Annexure / Exhibit / Drawing Amended	Page No.	Revision	Date	By (Name)	Verified (Name)

CONTENTS

1.0 GENERAL

2.0 CONSTRUCTION

3.0 TESTING

4.0 SHIPPING

5.0 REJECTION

1.0 GENERAL

1.1 Scope

1.1.1 This standard specifications, together with the data sheets attached herewith, covers the requirements for the design, materials, testing and shipping of Instrument Valves & Manifolds which includes the following types:-

a) Miniature instrument valves
b) Instrument valve manifolds
c) Instrument air valves

1.1.2 The related standards referred to herein and mentioned below shall be of the latest edition prior to the date of Purchaser's enquiry:

ANSI B 2.1	-	Pipe threads
ANSI B 16.11	-	Forged steel fittings-socket welding and threaded.

1.1.3 In the event of any conflict between these specifications, data sheets, related standards, codes etc, the vendor shall refer the matter to the purchaser for clarifications and only after obtaining the same shall proceed with the manufacture of the items in question.

1.2 Bids

1.2.1 Vendor's quotation shall include a detailed specification sheet for each type of Valves & Manifolds which shall provide the following information:

a) All the details regarding the type, construction, materials etc. of the items.
b) Overall dimensions in mm.

1.2.2 All the units of measurement and material specifications for various parts in the vendor's specification sheets shall be to same standards as in purchaser's data sheets.

1.2.3 Vendor shall attach a list of items, typewise, summing up all the deviations from this specification and purchaser's data sheets if there are any. Also vendor shall provide reasons for these in the bid.

1.2.5 Vendor's quotation, catalogues, drawings etc. shall be in English language.

1.3 Drawings, Data and Certification

Detailed drawings, data, catalogues and manual etc. required from the vendor are indicated by the purchaser in vendor data requirement sheets. The required number of reproducible and prints shall be despatched to the address mentioned, adhering to the time limits indicated.

2.0 CONSTRUCTION

2.1 Instrument Valves (Miniature)

2.1.1 The instrument valves shall be globe pattern-needle valves forged/ barstock with inside screwed bonnet.

2.1.2 Body and trim material shall be 316 SS unless otherwise specified.

2.1.3 The valve body rating shall be 3000 lbs unless specified in piping material specification which shall govern in case it is specified.

2.1.4 The end connection shall be 1/2" NPTF to ANSI B2.1.

2.1.5 The packing material shall be teflon unless otherwise specified.

2.1.6 The hand wheel material shall be carbon steel zinc plated.

2.1.7 Flow direction shall be marked on the body.

2.1.8 The valve dimension shall be as follows:

a) End to end dimensions 76 mm (approximately).
b) Height in fully open condition - 135mm maximum.

2.2 VALVE MANIFOLDS

2.2.1 3-Valve & 5-Valve manifolds:

2.2.1.13 Valve manifold shall be designed for direct coupling to differential pressure transmitters having 2 bolt flanges with 54 mm (2-1/8") centre to centre connections and 41.3 mm (1-5/8") bolt to bolt distance. The manifold shall contain two main block valves and an equalizing by-pass valve. The valves shall be needle valves. They shall use self aligning 316SS ball seats.

2.2.1.25 Valve manifold shall contain two main line block valves and a combination double block and bleed for the bypass line.

2.2.1.3 The manifold shall be suitably for mounting directly on the stanchion (2" pipe).

2.2.1.4 All bonnets shall have teflon packing unless otherwise specified.

2.2.1.5 The material of construction shall be 316 SS unless otherwise specified.

2.2.1.5 The material of construction shall be 316SS unless otherwise specified.

2.2.1.6 The flanges shall be integral part of the block.

2.2.1.7 The process connection shall be 1/2" NPTF to ANSI B2.1.

2.2.1.8 The manifolds shall be supplied alongwith mounting accessories. The bolts and nuts shall be alloy steel as per ASTM A 193 Gr B ASTM A 194 GR 2H respectively. Rings shall be teflon and other accessories shall be cadmium plated.

2.2.1.9 Vendor shall furnish the material certificate for body.

2.2.2 3 Way 2 Valve Manifold for pressure gauges.

2.2.2.1 The manifold shall be designed for use with pressure gauges.

2.2.2.2 The valve shall be a ball valve.

2.2.2.3 The body shall be either straight or angle as specified in data sheets.

2.2.2.4 The body and trim material shall be 316SS, packing material shall be teflon unless otherwise specified.

2.2.2.5 The inlet connection shall be 3/4" plain end (female) for socket weld as per ANSI B 16.11.

2.2.2.6 The gauge connections shall be with union nut & tail piece threaded 1/2" NPT (F).

2.2.2.7 The drain connection shall 1/2"NPTF.

2.3 Instrument Air Isolation Valves

2.3.1 The valves shall be full bore ball valves.

2.3.2 Body material shall be Nickel or Cadmium plated carbon steel.

2.3.3 Trim material shall be 316SS.

2.3.4 The end connection shall be 1/2" NPTF to ANSI B2.1 unless otherwise specified.

2.3.5 The packing material shall be teflon.

2.3.6 The handle/wrench material shall be cadmium or nickel plated carbon steel.

2.3.7 The valve body rating shall be ANSI 800 lb.

2.3.8 End to end dimensions shall be 70mm (approximately).

3.0 TESTING

3.1 The instrument valves (miniature) shall be hydrostatically tested at 200kg/cm^2 g at 38^oC.

3.2 All manifolds (3 valves, 5 valves and 3 ways, 2 valves) shall be hydrostatically tested at 200 kg/cm2 at 38C.

3.3 The instrument air valves shall be hydrostatically tested at 15.0 kg/cm^2g at 38^oC and at 10.5 kg/cm^2g with dry air.

4.0 SHIPPING

4.1 All threads/ends shall be protected with plastic caps to prevent damage/entry of foreign matter.

5.0 REJECTION

Vendor shall make his offer in detail, with respect to every item of the purchaser's specifications. Any offer not conforming to this shall be summarily rejected.

SPECIFICATION

FOR

JUNCTION BOXES AND CABLE GLANDS

SPECIFICATION NO.: MEC/S/05/26/06

ELECTRICAL & INSTRUMENTATION
(OIL & GAS SBU)
MECON LIMITED
DELHI 110 092

0	15.10.2014			
Revision	Date	Ratnadeep Gupta	Vikas Jain	Rakesh Kr. Shukla
		Prepared By	Checked By	Approved By

AMENDMENT STATUS

Sl. No.	Clause / Paragraph / Annexure / Exhibit / Drawing Amended	Page No.	Revision	Date	By (Name)	Verified (Name)

C O N T E N T S

1.0 GENERAL

2.0 JUNCTION BOXES

3.0 CABLE GLANDS & PLUGS, REDUCERS/ ADAPTORS

4.0 NAME PLATE

5.0 SHIPPING

6.0 REJECTION

1.0 General

1.1 Scope

1.1.1 This standard specifications, together with the data sheets attached herewith, covers the requirements for the design, materials, nameplate marking, testing and shifting of junction boxes & cable glands which include the following types:

a) Electrical junction boxes.
b) Pneumatic junction boxes
c) Cable glands (whenever specified)

1.1.2 The related standards referred to herein and mentioned below shall be of the latest editions prior to the date of the purchaser's enquiry:

ANSI B 2.1	:	Pipe threads
IS-5	:	Colours for ready mixed paints and enamels
IS-2147	:	Degrees of protection provided by enclosures for Low voltage switchgear and control gear.
IS-2148	:	Flame proof enclosure of electrical apparatus.

1.1.3 In the event of any conflict between specifications, data sheets, related standards, codes etc., the vendor shall refer the matter to the purchaser for clarifications and only after obtaining the same should proceed with the manufacture of the items in questions.

1.2 Bids

1.2.1 Vendor's quotation shall include a detailed specification sheet for each type of junction box and cable gland which shall provide the following information:

a) All the details regarding the type, construction, materials, housing, entries, etc.
b) All dimensions in millimetre.
c) Sketch for each type of JB with dimensional details showing the terminal and entries arrangement.
d) Mounting details.
e) Vendor shall furnish certificate from statutory body for explosion proof enclosure, indicating the gas group and temperature class.

1.2.2 All the material specifications for various parts in the vendor's specification sheets shall be to the same standards as those in purchaser's data sheets (e.g. BS IS, etc.)

1.2.3 Vendor shall attach a list of items, tag number wise, summing up all the deviations from the purchaser's data sheets, if there are any. Also vendor shall furnish reasons for these deviations.

1.2.4 Vendor shall enclose catalogues giving detailed technical specifications and other information for each type of JB/cable glands and its accessories covered in the bid.

1.2.5 Vendor's quotation, catalogues, drawings, etc. shall be in English language.

1.3 Drawings, Data and Certification

1.3.1 Detailed drawings, data, catalogues required from the vendor are indicated in vendor data requirements sheets. The required number of reproducible and prints shall be despatched to the address mentioned, adhering to the time limits indicated.

1.3.2 After placement of purchaser order, vendor shall submit certified drawings and specifications sheets for each type of JB/cable gland which shall include the following:

a) Detailed dimensional drawings
b) Weight of each in grams/Kg.
c) Certificate from statutory body suitable for installation in specified hazardous area.

2.1 Junction Boxes

2.0 Junction boxes shall be either of the following type as specified in data sheets.

I. Weather proof junction boxes.
II. Weather proof & Explosion proof junction boxes.

2.2 The enclosure shall be as per IS-2147 for weather proof junction boxes and for Explosion proof it shall be as per IS-2148 suitable for the area classification specified.

2.3 Number of entries and locations shall be as per data sheets.

2.4 Junction boxes shall be provided with telephone sockets and plugs for connection of hand powered telephone set.

2.5 Electrical Junction boxes

2.5.1 Material shall be die-cast aluminium of minimum 5 mm thick (LM-6 alloy)

2.5.2 Explosion proof junction boxes shall have detachable cover which is fixed to the box by means of cadmium plated triangular head/hexagonal head screws.

2.5.3 Weather proof junction boxes shall have doors which shall be hinged type and these shall be fixed with cadmium plated countersunk screws.

2.5.4 Explosion proof junction boxes shall have a warning engraved/integrally cast on the cover as given below:

"Isolate power supply elsewhere before opening"

2.5.5 Terminals shall be spring loaded, vibration proof, clip-on type, mounted on nickel plated steel rails complete with end cover and clamps for each row.

2.5.6 All terminals shall be suitable for accepting minimum 2.5 sq. mm copper conductor, in general. However for power supply distribution boxes, terminal detail shall be as per job specification/Data sheets.

2.5.7 Sizing shall be done with due consideration for accessibility and maintenance in accordance with the following guidelines.

i) 50 to 60 mm between terminals and sides of box parallel to terminal strip for upto 50 terminals and additional 25mm for each additional 25 terminals.
ii) 100 to 120mm between terminals for upto 50 terminals and additional 25mm for each additional 25 terminals.
iii) Bottom/top of terminal shall not be less than 100 mm from bottom/top of the junction box.

2.5.8 Terminals shall be marked as per the various types indicated in data sheets.

2.5.9 Shall be provided with external earthing lugs.

2.6 Pneumatic junction boxes

2.6.1 Pneumatic junction boxes shall be made of 3mm thick hot rolled steel. They shall have necessary neoprene gasket between door and body. Door shall be flush with the box and shall be hinged type and provided with wing nuts.

2.6.2 Single tube entries shall be suitable for 6mm O.D. copper tube with bulk head fittings. Multi tube bundle entry shall be suitable for the data furnished in data sheets.

2.7 Painting

2.7.1 Surface shall be prepared for painting. It shall be smooth and devoid of rust and scale.

2.7.2 Two coats of lead-free base primer and two final coats of lead free epoxy based paint shall be applied both for interior and exterior surfaces.

2.7.3 The colour shall be as specified in data sheets.

3.0 Cable glands & plugs, Reducers/Adaptors

3.1 Cable glands shall be supplied by vendor whenever specified.

3.2 Cable glands shall be double compression type for use with armoured cables.

3.3 The cable glands shall be of Nickel plated brass.

3.4 The cable gland shall be weather proof. Whenever specified they shall be explosion proof and certificate from statutory body shall be furnished.

3.5 Cable glands shall be supplied to suit the cable dimensions indicated along with tolerance indicated in data sheets. Various components like rubber ring, metallic ring, metallic cone and the outer/inner nuts etc. shall be capable of adjusting to the above tolerances of cable dimensions.

3.6 Reducers/Adaptors shall be supplied as per details indicated in data sheets. They shall be nickel plated brass. These shall be weather proof in general. These shall also be explosion proof wherever specified and certificate from statutory body for explosion shall be furnished.

3.7 Plugs shall be provided wherever specified. They shall be of Nickel plated brass.

3.8 Plugs shall be certified explosion proof when used with explosion and junction boxes.

4.0 Name Plate

4.1 Each junction box shall have an anodised aluminium name plate permanently fixed to it at a visible place bearing the tag no. & enclosure. The name plate shall also bear the stamp of certifying agency with certificate number.

5.0 Shipping

5.1 All threaded openings shall be suitably protected to prevent entry of foreign material.

5.2 All threaded components shall be protected with plastic caps to prevent damage of threads.

6.0 Rejection

Vendor shall furnish his offer in detail, with respect to every item of the purchaser's specifications. Any offer not conforming to this shall be summararily rejected.

SPECIFICATION

FOR

SIGNAL CABLES

SPECIFICATION NO.: MEC/S/05/26/07

ELECTRICAL & INSTRUMENTATION
(OIL & GAS SBU)
MECON LIMITED
DELHI 110 092

0	15.10.2014			
Revision	Date	Ratnadeep Gupta	Vikas Jain	Rakesh Kr. Shukla
		Prepared By	Checked By	Approved By

AMENDMENT STATUS

Sl. No.	Clause / Paragraph / Annexure / Exhibit / Drawing Amended	Page No.	Revision	Date	By (Name)	Verified (Name)

CONTENTS

1.0 GENERAL

2.0 CONSTRUCTION

3.0 ELECTRICAL CHARACTERISTICS

4.0 TESTING

1.0 GENERAL

1.1 Scope:

This specification together with the job Specifications attached herewith forms the requirements for design, materials manufacturing, testing and shipping of PVC insulated signal cables.

1.2 Standards:

The cables shall conform to the latest editions of the various standards mentioned in the specification.

In case of any conflict between any standard and this - specifications the matter shall be referred to the purchaser before proceeding with the manufacture of the cables.

1.3 Bids:

1.3.1 Vendor's quotation shall include the following as a minimum.

Completed job spec. Pair identification method, type test certificates, technical literatures, various testing methods and cross sectional dimensional drawings. All information/data shall be in English language.

1.3.2 Vendor's quotation shall include a list of deviations if any from purchaser's specifications and shall also indicate the reasons for such deviations for consideration to arrive at mutually agreed deviations. However vendor shall note that no deviation shall be accepted in respect of the permissible limits of resistance capacitance and L/R ratio of cables.

1.3.3 Vendor shall quote unit price per metre for each type of cable.

1.4 Instructions to Bidder:

1.4.1 The quantity indicated against each type of cable in the job specification may vary by± 25% at the time of placement of order. Vendor shall confirm that there shall be no price implication on this account in unit prices typewise.

1.4.2 Drum length for each type of cable shall be 500 to 1000 metres. Vendor shall indicate the maximum drum length possible for each type of cable in his bid. Exact requirements of drum length will be specified after purchase order during detailed engineering and vendor shall confirm that the same shall not affect the price or delivery schedule. The actual produced drum length shall not vary by more than± 5% from the value indicated in the purchase order.

1.4.3 Tolerance over the total ordered length shall be as follows:
± 5% for total length less than 5 km
± 2% for total length 5 km or more

1.4.4 Cable dimensions furnished by vendor in his bid shall be firm. Vendor shall comply with all the values during execution.

1.5 All cables shall be suitable for laying in open air, corrosive hydrocarbon plant atmosphere, direct sun and in trenches. The cable shall also be designed for prolonged use in tropical atmosphere.

1.6 On demand vendor shall furnish documents such as invoice and test certificates to prove the quality and composition of the materials used for manufacturing the cable to the satisfaction of client/ consultant or authorised representative during various stages of expediting and inspection.

2.0 Construction:

2.1 Type 1

(Single pair/triad shielded cable)

2.1.1 Each core shall be 1.5 sq. mm made of 7 stranded annealed electrolytic copper conductors. Each strand shall be 0.53 mm dia.

2.1.2 Primary insulation shall be 85°C polyvinyl chloride (PVC) as per IS-5831 Type C. Thickness shall be 0.5 mm minimum.

2.1.3 Each wire shall have twisted cores and No. of twists shall be not less than 10 per metre. Colour of cores insulation shall be black blue in a pair and black, blue and brown in a triad.

2.1.4 Individual pair and triad shall be shielded. Shield shall be Aluminium backed by Mylar/polyester tape bonded together with the metallic side down helically applied with either side - 25% overlap and 100% coverage. Minimum shielded thickness shall be 0.05mm. Drain wire shall be 0.5 sq.mm multistrand bare tinned annealed copy conductor. The drain wire shall be in continuous contact with Aluminium side of the shield.

2.1.5 Inner and outer jacket shall be made of extruded flame retardant 90°C PVC to IS 5831-Type ST2 Oxygen index of PVC shall be 30. Temp. Index shall be over 250° C.

Inner jacket colour shall be black. Outer jacket colour shall be black except for cable to be used in intrinsically safe systems it shall be light blue.

2.1.6 Armour over inner jacket shall be of galvanised steel wire/flat as per IS-1554 part-I.

2.1.7 A pair or triad identification shall be with numbers at interval of not more than 250 mm as per vendor's standard.

2.1.8 Tolerance in overall diameter of cable shall be within +_ 2mm over offered value for cables with OD less than 30mm and+3mm for cables with OD more than 30mm.

2.2 Type-II

(Multipair / Multitraid cable with individual pair shield and overall shield)

The cable shall be same as single pair shielded cable except conductor size shall be 0.5 sq.mm made of 16 strands of annealed electrolytic copper conductor. Each strand shall be of 0.2mm dia.

Additional feature shall be as follows:

2.2.1 Overall shield shall be of Aluminium backed up by Mylar/polyester tape helically applied with the metallic side down either side - 25% overlap and 100% coverage. Minimum shield thickness shall be 0.075mm Drain wire shall be similar to individual pair drain wire and shall be in continuous contact with the Aluminium side of the overall shield.

2.2.2 Overall twist of all pair/triads shall be as per vendor's standard.

2.2.3 A pair of communication wire shall be provided for multipair/multitriad cables. Each wire shall be 0.5 sq. mm of plain annealed single or multistrand copper conductor with 0.4 mm thick 85°C PVC insulation. Insulation shall be green and red colour coded.

2.3 Type-III

(Multipair/Multitriad cable with only overall shield)

These cables shall be same as type-II cables except that the individual pair/triad shall not have shielding.

2.4 Type-IV

(Multipair/ multitriad cable with individual pair shield and overall shield)

The cable shall be same as Type II except conductor size shall be 1.5 sq.mm made of 7 stranded annealed electrolytic copper conductor. Each strand shall be 0.53 mm dia.

2.5 Type-V

(Multipair/ Multitriad cable with overall shield only)

The cable shall be same as type IV except that the individual pair/triad shall not have the shielding.

3.0 Electrical Characteristics

3.1 Maximum d.c. resistance of the conductor of the completed cable shall not exceed 12.3 ohms/km at 20° C for cables with 1.5 sq.mm conductor and 39.7 ohms/km at 20°C for cables with 0.5 sq.mm conductor.

3.2 Capacitance

3.2.1 Mutual Capacitance

The mutual capacitance of the pairs or adjacent cores shall not exceed a maximum of 250 pF/Meter at a concequency of 1 KHz.

3.2.2 Capacitance between any core or screen.

The capacitance between any core or screen shall not exceed a maximum of PF/Meter at a frequency of 1KHz.

3.3 L/R ratio of adjacent core shall not exceed 40 micro henry/ohm for cables with 0.5 sq. mm conductor.

3.4 The drain wire resistance including shield shall not exceed 30 ohms/km.

3.5 Electrostatic noise rejection ratio shall be over 76 dB.

4.0 Testing

4.1 Type test: Cable shall be flame retardant to IEC 332 Part III Cat. A. For qualification certificates from third party or client /consultants authorised representative for this test shall be furnished by vendor for cables similar to those being offered.

4.2 Routine tests: (To be carried out by vendor during various stages of manufacture. Purchaser shall review the related documentation).

4.2.1 Insulation and jackets: All tests as per IS-5831 except insulation resistance, voltage and spark test shall be as per BS-5308. Part-II(1986)

4.2.2 Armour test as per IS-3975.

4.2.3 Conductor resistance.

4.2.4 Cable capacitance and L/R ratio.

GENERAL SPECIFICATIONS
FOR
INSTRUMENTATION

SPECIFICATION NO.: MEC/S/05/E5/I/08

ELECTRICAL & INSTRUMENTATION
(OIL & GAS SBU)
MECON LIMITED
DELHI 110 092

0	15.10.2014			
Revision	Date	Ratnadeep Gupta	Vikas Jain	Rakesh Kr. Shukla
		Prepared By	Checked By	Approved By

AMENDMENT STATUS

Sl. No.	Clause / Paragraph / Annexure / Exhibit / Drawing Amended	Page No.	Revision	Date	By (Name)	Verified (Name)

CONTENTS

1.0 GENERAL

2.0 DEFINITIONS

3.0 SCOPE OF WORK

4.0 DESCRIPTION OF WORK

5.0 DRAWINGS AND DOCUMENTS TO BE PROVIDED BY OWNER

6.0 DRAWINGS AND DOCUMENTS TO BE PROVIDED BY CONTRACTOR

7.0 SCRAP AND EXCESS MATERTIAL

8.0 SPECIAL INSTRUCTIONS TO CONTRACTOR

1.0 GENERAL

1.1 INTRODUCTION

1.1.1 This part of the technical specifications covers in general, definitions, standards, scope of works, specifications of work, documentation, scope of supply of materials and scrap and excess materials and different requirements to be adhered to during the course of execution of instrumentation works.

1.1.2 Instrumentation works shall be performed in accordance with this technical specification and various other drawings and schedules supplied during the execution and time to time instructions from Engineer-in-Charge or his authorised representative(s) during the progress of the work.

2.0 DEFINITIONS

2.1 MANIFOLDS

2.1.1 For close coupled instruments "Manifold" shall mean complete piping of instruments from first block valve upto the instruments, if the distance of the Instrument is within 2 feet (0.6m), from the Instrument tapping. If the distance of instrument is more than 2 feet (0.6m) from primary tapping such as orifice, then the installation is to be considered under remote installation.

2.1.2 For remote mounted instrument, "Manifold" shall mean the assembly of nipples, valves and fittings around the instrument to form a block and bleed or by pass manifold or drain manifold as the case may be. These shall be generally according to the hook up drawings enclosed with tender. Wherever the instruments are with 3--way-valve manifold, this definition shall not be applicable as 3-way manifold forms part of instrument.

2.2 FIRST BLOCK VALVE

First block valve shall mean the valve/valves that are mounted directly on equipment, columns, pipe, standpipe etc. and shall be operated to isolate the instrument and connected instrument piping from the above items.

2.3 SUPPORTS

Supports shall mean the MS angles, flats, channels that are generally provided to support the main cable ways, cable ducts, junction boxes, angle trays, perforated trays, instrument piping, signal tubing, instrument air supply lines etc., at specified intervals from the structures, concrete columns etc. to keep all items firmly secured against vibration, warping, bending etc.

2.4 SCRAP

2.4.1 Salvageable scraps

Salvage scrap shall mean lengths of tubes, pipes, multicables, other cables etc. that can be used one time or other at later date and normally they are recovered from the cut-pieces of tubes, pipes, multicables, cables, etc.

2.4.2 Non Salvageable Scrap

Non salvageable scrap shall mean the lengths of tubes, pipes, multicables, cables, etc. that cannot be used at all one time or other.

2.5 Standards

The instrumentation erection and calibration works shall be carried out generally in accordance with various international and Indian standards in instrumentation listed below but not limited to the following:

2.5.1 API -RP-550 Manual on Practices for instrumentation.

2.5.2 ISA standards and Practices for instrumentation

2.5.3 Instrumentation hook-up standards enclosed.

2.5.4 Instrumentation supports standard enclosed.

2.5.5 Manufacturer's standards and Practices.

3.0 SCOPE OF WORK

3.1.0 The Scope of work shall consist of supply of instrument items (as per schedule of quantities/rates and SCC), instruments, their erection, testing, calibration and commissioning and making it ready for commercial operation. The scope covers various jobs listed under the schedule of quantities/rates. However to ensure proper execution and completeness of instrument--work any or all of the following shall also form the part of the scope and shall be covered in the quoted rates.

3.1.1 Fabrication of pipe nipples, including threading whenever required.

3.1.2 Fabrication of seal pot/syphon/drain pot as per standards. Filling of seal pots with filling liquids as per instructions from Engineer-in-charge.

3.1.3 Back/seal welding of screwed fittings as required by standards.

3.1.4 Laying of cable underground including excavation, sand filling, brick laying and back filling.

3.1.5 Connection of purging devices for instruments to the systems provide as per drawings.

3.1.6 Civil works including the casting of foundation as per requirements for instruments supports where paved surface do not exist.

3.1.7 Minor civil works like chipping of pavement and grouting on the pavements the instrument panels/supports/stanchions, and chipping and refilling of the pavement for conduits.

3.1.8 Sealing of cables/ tube entries into the control room after laying and testing of all tubes, cables etc.

3.1.9 Degreasing of handwheels of control valves, stud bolts, nuts of side and bottom flange of control valves, orifice plates, other primary elements flanges, oxygen service impulse lines, instruments as per manufacturers instructions and other items as required by Engineer- in-charge.

3.1.10 Rotation of control valve bonnet wherever required.

3.1.11 Reversing the action of control valves either the replacement of springs, accessories or in positioner wherever required.

3.1.12 Minor modification/repairs required to be done on the instruments namely, changing the dial, glasses for pressure gauges, temperature gauges and other instruments, replacement of rotameter tubes, level gauge glasses, replacement of damaged signal tubes, threads, couplings etc.

3.1.13 Painting of all structural supports for trays, pipes, junction boxes, instruments, etc, as per painting specification.

3.1.14 Identification with approved colour of paint the instruments/impulse, lines manifold connected with alarm/trap circuit. Also, punching of tag numbers on items shall be carried out as per instructions of Engineer-in-charge.

3.1.15 Coordination with mechanical and other sub-contractors for proper installation of line/ vessels/ equipment mounted instruments like control valves, orifice assemblies, turbine meters, PD meters, level transmitters, level gauges, level switches etc. which involves removal of instruments, disconnection of tubes/cables, reconnection for alignment proper installation etc.

3.1.16 Drilling holes on all panels, shut down cabinets, power supply cabinets, control panels pneumatic enclosures etc., for cables/ multitubes/ glands/ groomats.

3.1.17 Grounding of shield of all shielded cables to respective instruments earth bus provided in the control room/local panel/thermocouple head.

3.1.18 Laying and termination at both ends between instrument earth buses provided in control room/ local panel to instrument earth pit provided by others.

3.1.19 Supply of all types of consumables required for the execution of the job.

3.1.20 Submission of monthly material appropriation statements for cables, piping materials fittings, including the quantity issued and expended in standard proforma.

3.1.21 Completion of owners drawings/documents, as per the execution of work at site.

3.1.22 Preparation and submission of as built drawings as required.

3.1.23 Start-up and commissioning.

3.1.24 Submission of final material appropriation statements for all the materials issued by the owner.

3.1.25 Any other work not mentioned above, but required for the proper execution of the works.

3.1.26 Where requested by owner/Engineer-in-charge or his authorised representatives, all or any of the works detailed above and schedule quantities shall also be performed on package units, local panels/cabinets/gauge board installed by owner or by others.

3.1.27 Sealing of safety valves/switches with standard lead seals after final setting in the presence of Engineer- in-charge.

4.0 DESCRIPTION OF WORK

4.1.0 <u>INSTRUMENT PIPING</u>

4.1.1 All primary piping shall be installed in the best workman like manner and shall follow installation standards in each case. Where there is no installation standard, the instruction of the Engineer-in-charge shall be followed.

4.1.2.1 Horizontal and vertical lines shall be installed using levels and plumo bobs.

4.1.3 Unless otherwise specified in the drawings pipelines shall have a slope of 8% on the horizontal runs.

4.1.4 All welding shall be carried out as per welding procedures and codes with electrodes approved by Engineer-in-charge. Only qualified welders approved by Engineer-in-charge shall carry out welding. Charges for non-destructive testing like radiography, Dye penetration tests, post heat treatment tests and stress relieving shall be carried out on the basis of actual man hours spent towards these works and man-hour charges with cost of all materials, test equipments, etc. shall be used. However, any materials like electrode, equipments, testing charges for various tests, etc., required for the initial qualification of the welder/welders shall be or the scope of the contractor.

4.1.3.1 Pipe shall be bent using pipe benders only and any bending will be totally rejected. Pipes shall be cut using pipe cutting device. Hot cutting will not be allowed.

4.1.6 Piping for steam tracing shall be installed according to the standards and avoiding condensate pockets.

4.1.7 All threaded joints shall be jointed with Teflon tape and no other pipe jointing compound shall be used except on high temperature service where graphited sealing compounds shall be used.

4.1.8 All primary piping shall be properly supported at regular intervals of 1.0 meters. Angle supports shall be fabricated from 40mmx40mmx5mm MS angles as minimum.

4.2.0 PVC COVERED/BARE TUBE (COPPER/SS/ALUMINIUM)

4.2.1 Single copper/SS/Aluminium tubes shall be laid as per standards on trays. Fabricated out of 2.5 mm thick perforated steel plate. The width of the trays shall be selected as per the number of tubes laid. Tubes shall be clamped to the trays at every 300 mm using clamps made of galvanized steel/Aluminium strips. The practice of flattening tubes for clamping purposes shall be avoided. In case of PVC covered tubes, any exposed portion at ends and connection shall be neatly taped to appropriate thickness.

4.2.2 Trays shall be properly supported either from any rigid steel structure or concrete member as detailed under trays and supports below.

4.2.3 All male/female tube connectors shall be installed with Teflon tape only. Identification tag plates/ferrules shall be provided on either side of copper tubing as per tubing/junction box schedules. Ferrules shall be single sleeve type with letters and numbers neatly printed.

4.3.0 INSTALLATION OF MULTITUBES AND MULTICORE CABLES

4.3.1 Multiple cables/ multitubes shall always be installed on ducts/trays and properly clamped. At every vertical drop to junction boxes, they shall be clamped at more frequency intervals (Maximum of 300mm). They shall be connected inside junction boxes strictly according to the number system as mentioned in cable schedule. At bends minimum radius shall be maintained as per manufacturer's standard. The angle tray supports shall be fabricated from 40mmx40mmx5mm angles minimum size.

4.3.2 Identification tags shall be provided on either end of multitubes, multicore cables as per cable/tubing/cable schedules. Engraved tag plates or PVC ferrules shall be used for identification of tubes/cables.

4.3.3 All Multitubes and Multicables shall be cut after the exact site measurements are taken between ends and the cable/tube drums shall be selected before cutting the lengths so as to avoid any wastage.

4.3.4 In the field, the cables shall be laid in perforated trays as per layout drawings. Cables shall also be buried or laid in concrete trenches. Inside control room, these shall be laid in concrete trenches or under false floorings.

4.3.5 In the field, the cables shall be laid in perforated trays as per layout drawings. Cables shall also be buried or laid in concrete trenches. Inside control room, these shall be laid in concrete trenches or under false floorings.

4.4.0 INSTALLATION OF INSTRUMENTS

4.4.1 All instruments shall be generally installed on supports as per installation standards in each case, and shall be accessible.

4.4.2 Receiver gauges shall be mounted on instrument support itself as per tubing hook up standards.

4.4.3 Filter regulators shall be mounted on the instruments support itself below the instruments or on the control yoke.

4.5.0 INSTRUMENT AIR SUPPLY

4.5.1 The main instrument air header in each area is laid by other contractor. Air supply from the main air header take off valve to individual instrument shall be through either galvanized steel pipe or 1/4" OD PVC covered copper tube or SS tubes.

4.5.2 Individual takes off valves shall always be located on top of the main air header. Unions shall be provided at convenient locations. There shall be one isolation valve at each instrument end. The galvanised pipe shall be supported at a minimum interval of 1000 mm with 40mmx40mmx5mm MS angles. Final

connection to be instrument shall be copper/SS tubing as per tubing hookup standards.

4.5.3 Teflon tapes shall be used on all threaded joints.

4.6.0 INSTRUMENT STEAM TRACING

4.6.1 The mainsteam header in each area is laid by the other contractor. From the main steam header take off valve, steam to individual instrument shall be taken through carbon steel pipes supported at regular intervals. Steam tracing around individual instruments shall be to copper tubes. After steam tracing, the line is connected to the drain funnel through individual steam trap/condensate return header/tapper point as the case may be.

4.6.2 Electrical tracing shall be done by others.

4.7.0 PERFORATED TRAYS AND SUPPORTS

4.7.1 The perforated trays / angle trays shall be properly supported at a regular interval of max. 1000mm from insert plates or steel structures. Wherever insert plates are not available supports on concrete structures on ceiling shall be fixed with a minimum 10mm diameter expansion bolts. Angle supports for perforated trays/angle trays shall be fabricated from 40mmx40mmx5mm M.S. angles minimum size.

4.7.2 All supports shall be cut with hacksaw and any work executed by gas cutting for cutting and drilling holes will be totally rejected. Free ends of angle support shall not have sharp edges and shall be properly rounded off.

4.7.3 Perforated trays/angle trays shall be used for branching cables and tubes from main trays. Perforated trays shall be used for branching cables and tubes from main trays. Perforated trays shall be fabricated out of 2.5 mm perforated steel sheet. Width of trays shall be selected according to number of tubes and cables. Trays shall be laid generally as per site conditions with the approval of Engineer-in-charge.

4.8.0 LAYING OF CABLES

4.8.1 All cables shall be laid in accordance with installation drawings and cable schedules. Before laying, cable/multicable on drums shall be meggered and tested to ascertain the transit damages.

4.8.2 All cables routes shall be carefully measured and cables cut to the required lengths, leaving sufficient amount for the final connection of the cable to the terminals on either end. The various cable lengths cut from the cable reels shall be carefully selected to prevent undue wastage of cables. Sufficient extra length

of cable shall be kept at the terminal on points.

4.8.3 Cables shall have complete uncut lengths from one terminal to the other.

4.8.4 All cables shall be identified close to their termination point by cables number as per cable schedules/junction boxes schedules. PVC ferrule/tag plate shall be used and these identification tags shall be securely fastened to the cables.

4.8.5 All cores of electrical cables shall be identified by their wire numbers by means of the PVC ferrules. Wire numbers shall be as per schedules. All temporary ends of cables shall be protected against dirt and moisture. For this purpose, ends of all PVC insulation cables shall be taped with an approved PVC or rubber insulating tape. Use of function type or other fabric type is not permitted.

4.8.6 The cable shall be bent in a large radius. Cables installed above ground shall be run exposed on walls, ceilings, structures and shall run parallel or at right angles with beams, walls or columns.

4.8.7 Cables shall be rigidly supported on structural steel and masonary individually or in groups as required using galvanised clips, multiple cable supports or cable trays. If drilling of steel must be resorted to, approval must be obtained and steel must be drilled where the minimum of weakening of the structure will result. Cable shall be supported at every 500 mm.

4.8.8 All special cables and power supply cables will be laid directly to the field instrument without any junction boxes, unless otherwise specified.

4.8.9 While laying cable in trenches or burying them care shall be taken to ensure that low signal cables like alarm, analyser cables, special cables, special cables from turbine meters, compensating cable etc. are separated from other power supply cables.

4.8.10 Each underground cable (either in concrete trenches or burried) shall be provided with identifying tag of lead securely fastened every 30m of its underground length with atleast one tag at each end before the cable leaves/enters the ground.

4.8.11 Directly buried cables shall be laid underground in excavated cable trench wherever specified in layout drawings. Trenches shall have sufficient depth and width to accommodate all cables correctly spaced. Before cables are placed the trench bottom shall be filled with 100 mm layer of sand and leveled. Each layer of cables shall be covered with 150 mm of sand on top and sand shall be lightly pressed. A protective covering of 75 mm thick second-class red bricks shall be placed flat on the final layer of sand and cable. The remaining portion of the trench shall be then back filled with soil compacted and leveled. On complete of every group of cable laying and before sand filling, every cable shall be given insulation test in the presence of Engineer-in-charge. Any cable proved to be defective should be replaced before the next groups of cables are laid. Cable route markers indicating number of cables, depth and direction will be placed

enroute, on crossovers/turnings, etc. to mark the cable route.

4.8.12 At each road crossings and other places, where cables enter pipe sleeves, adequate bed of sand shall be given so that the cables do not slack and get damaged by pipe ends after pack filling.

4.8.13 At the entry into concrete blocks at road crossings cable loops shall be provided at either end to prevent any damage to cables. Each cable shall have one tag at each end before the cable enters/leaves conduct pipes

4.8.14 After laying of all the cables and multitubings, cables, the cable entry to control room shall be suitably filled and sealed so as to achieve a positive seal against the entry of gas/water.

4.8.15 All cables and tubes shall be laid in accordance with the layout drawings with sand and precast concrete slabs shall be placed on the trench.

4.8.16 On completion of cable laying in concrete trenches, the trenches shall be filled with sand and precast.

4.9.0 EARTHING

4.9.1 Earthing of junction boxes, local cabinets as per the documents and instruction from Engineer-in-charge.

4.10.0 PAINTING

4.10.1 This part of the specification is applicable to cable ducts, MS cable ways, angle trays, instrument supports, perforated trays, all structural supports for the above items, etc.

4.10.2 The surface to be painted shall be thoroughly cleaned with wire brush, sand paper to remove all scales. After cleaning, the surface is painted with one coat of red oxide zinc chromate primer conforming to IS- 207 and allowed to dry completely.

4.10.3 Primer coated surface is painted with one coat of paint to the colour nearest to the final paint and allowed to dry. The colour number shall be specified from IS-5.

4.10.4 Final second coating shall be with the paint of desired colours and shall be selected from IS-5.

4.10.5 It shall be noted that final second coating of external surfaces not covered by cables, copper tubes etc. shall be applied just before handling over the plant or commissioning of the plant whichever is earlier.

4.10.6 The name of manufacturer, colour and quality of all types of primer paint shall be

subject to approval of Engineer-in-charge.

4.11.0 TESTING

4.11.1 Electrical cables for signal power supply alarms, and compensating cables for thermocouples; resistance thermometer cables shall be checked for megger values and continuity before proper termination and ferruling.

4.11.2 Testing shall be carried out after the installation of instrument with primary piping complete in all respects and approved by Engineer-in-charge.

4.11.3 Primary piping shall be tested hydraulically pneumatically to 1.5 times the operating pressure after isolating the instruments. Flushing of piping shall be carried out as per instructions of Engineer-in-charge. Lines shall be blown after hydro-testing. All external displacement /float type level instrument level gauges shall also be tested as per instructions of Engineer- in-charge.

4.11.4 Tubes and air line shall be tested with compressed air to 7 kg/cm^2 upto the filter regulator. The down steam side of the filter regulator shall be tested for 1.5kg/cm^2. The lines shall be blown with the instrument air upto the regulator for 15 minutes to remove any traces of oil, dust & moisture. All lines shall be checked with soap solution and bubbler unit for possible leak at joints. After pressurizing, source shall be cut off and rate of fall in pressure shall be less than 1 p.s.i. for each 100 ft. of copper tubing for a test period of 2 minutes as per I.S.A.R.P.7-1 "Pneumatic control circuit pressure test".

4.11.5 All test results shall be recorded in the approved format.

4.12.0 CALIBRATION

4.12.1 All instruments shall be calibrated strictly as per manufacturer's instructions prior to installation. The scope of calibration includes all field and control rooms of all types namely, pneumatic, electronic, electrical etc.

4.12.2 Contractor shall use his own oil free instruments, air compressor for calibration purposes.

4.12.3 The level switches (external cage type) shall be set by filling the cage with water to the desired alarm/trip level, while setting the switches, it shall be ensured that the micro switches do not reset for full rated travel of the float.

4.12.4 Control valves and positioners shall be checked for hysterisis and linearity and calibration for rated strokes. Prior to calibration, valves shall be cleaned externally. The stem is then lubricated if required, and stroked few times to extreme positions of plug to ensure that movement is free from friction. The valve shall then be calibrated for rated stroke and linearity also. Subsequently the valves shall be checked for hysterisis to the accuracy of 1% FS with positioners and 5% FS without positioners.

Stroke speed has to be evaluated for all trip/shutdown valves.

4.12.5 All calibrations reading shall be recorded in the enclosed format and submitted to Engineer-in-Charge for approval. Where significant deviations from specifications are obtained, the matter shall be brought to the immediate notice of the Engineer-in- Charge for corrective actions.

4.12.6 Furnished hereunder is a list of recommended calibration and test equipments required as a minimum for calibration work. The contractor shall clearly state in his offers the complete list of calibration and test equipments along with the range, accuracy and quantity, which he proposes to use for this job. Contractor should also ensure that any equipment not listed below but required at the time of calibration shall be made available at his own cost.

4.12.7 All test equipments/kits shall be approved by NPL authorities.

4.12.7.1	Controller test stands	Mft. Standard
4.12.7.2	Indicator/recorder test stands	-do-
4.12.7.3	Squeeze bulb (Flow calibrator Range: 0-770, 10,000 mm wg.	-
4.12.7.4	Dead weight testers (Budenberg or equivalent) For ranges upto 350 kg/cm^2	- +/- 0.1%
4.12.7.5	Gauge comparator for pressure gauges Rating : upto 350 kg/cm^2	-
4.12.7.6	Oil bath for temperature calibrations max. Temp 350°C.	Mfr's Std
4.12.8.7	Standard Mercury in glass thermometers Range : -50 to + 50°C. 0 to 100°C (NPL certified) 0-250°C, 0-350°C	$\pm$ 0.25%
4.12.7.8	Standard gauges for Ranges upto 350kg/cm^2	$\pm$0.25%
4.12.7.9	U-tube differential manometers/inclined	

	tube manometer Static pr. rating : 7 kg/cm^2	+_ 1mm
4.12.7.10	Single leg manometers Scale: -1500 mm water and 1500 mm hg. Static pr. rating : 7 kg/cm^2.	+_ 1mm
4.12.7.11	Decade resistance box	MFR' std.
4.12.7.12	Millimeters	±0.05Mv
4.12.7.13	Potentiometer (Cable of generating and measuring mV)	-
4.12.7.14	Meggers 500V/1000V	-
4.12.7.15	Air hydro pump/hydraulic pump	-
4.12.7.16	Vacuum pump	-
4.12.7.17	Instrument air compressor with filters and Regulators and deoilers.	-
4.12.7.18	Current generator (instrument checker) 4-20mA dc(YEW make or equivalent)	-

4.13.0 LOOP TEST

4.13.1 Loop test shall be performed after calibration of all instruments and leak test of signal lines. Loop tests are conducted to check the functional performance of all elements comprising the loop, thereby ensuring proper connections and operations.

4.13.2 Before proceeding for loop tests the calibration results of individual elements shall be recorded on the enclosed proforma and shall get it approved by Engineer-in-Charge for correctness of installation, measurements and calibration results.

4.13.3 Loop testing for all control loops shall be generally by simulation of process

conditions and shall fix points namely 0%, 25%, 50%, 75% and 100% of full-scale inputs. Detailed procedure shall be submitted to Engineer-in-charge for approval before proceeding with the loop testing.

In case of shutdown system field/receiver pressure switches are simulated for abnormality by disconnecting the wires at terminal and function of all associated systems are checked.

4.13.5 Performance of individual loops may be accepted for an overall accuracy of $\pm$ 1.5% where deviations exist, contractor shall recalibrate the instruments, which form part of loop testing wherever required, at no extra cost.

4.13.5.1 After the loop test is complete, the contractor shall connect back any terminations and connections removed for loop test.

4.13.7 A loop shall be considered as handed over only after measurements in that particular loop are complete and certified by Engineer-in-Charge, in addition to loop sheets being duly filled in all respects and approved and accepted by Engineer-in-Charge and client.

4.13.8 In case of loops in which certain instruments of the loops are calibrated by other agency, loop testing shall be performed in coordination with the agency involved. Any defect in the calibration of the instrument in contractor's scope is observed, it shall be rectified to the satisfaction of the Engineer-in- Charge. However, defect in calibration of the instruments in the scope of other agency, same shall be rectified by the agency involved. After the calibration has been rechecked by the other agency/agencies the loop checking would be performed to the satisfaction of Engineer-in-Charge, and this part covers under the scope of the contract.

4.13.9 Final certified loop sheets shall be submitted in 4 copies and one transparency.

5.0.0 DRAWINGS AND DOCUMENTS TO BE SUPPLIED FOR EXECUTION BY OWNER/ENGINEER IN CHARGE

5.1.1 Piping ad Instrumentation diagrams.

5.1.2 General layout plan for all units, showing all information like position of field instruments junction boxes indicative routes of cables, main ducts/cable trays.

5.1.3 Cable schedules for alarm, signal, shutdown, power supply and pneumatic cables, earthing guide lines.

5.1.4 Termination details/drawings for connecting at control room end.

5.1.5 Individual Instrument specifications

5.1.6 Bill of materials

5.1.7 Installation standards/ Hook-up

5.1.8 Manufacturers hand book with instructions for installation and calibration wherever necessary for reference.

6.0 DRAWINGS AND DOCUMENTS TO BE PROVIDED BY CONTRACTOR

6.1.1 The drawings for materials that are included on their supply and erection scope namely local control panel, junction boxes and local cabinets.

6.1.2 The detailed engineering drawing wherever such drawing is assigned.

6.1.3 Two sets of layout drawings, standards bill of materials cable schedules etc., duly incorporating the changes/modification carried out during the course of execution of works.

6.1.4 Final material appropriation statement for all free issue materials indicating shortages of any in the proforma duly approved by Engineer-in-Charge.

7.1.0 SCRAP AND EXCESS MATERIAL

7.1.1 Every month, the contractor shall submit an account for all the materials issued by the Owner in the standard proforma prescribed for this purpose by the Engineer- in-Charge.

7.1.2 On completion of the work, the contractor shall submit `Material appropriation' statements for all materials issued by the Owner in the proforma prescribed by the Engineer-in-Charge.

7.1.3 The following scrap allowances are permissible.

Length below 0.5 mm	Non-salvageable	Unaccountable
Steel pipes, SS Tubes single pair/ Twocore / Three Core cables.	2%	0.5%

length below 20 m	Non-salvageable	Unaccountable
Multitube, Multicables	2%	0.5%

8.0 SPECIAL INSTRUCTIONS TO CONTRACTOR:

8.1.4 All excess materials and scrap shall be returned after duly accounting for, to the storage points designated by the Owner. Where materials are to be weighed before return, the contractor shall be responsible for making the necessary section obtained during the course of construction for fabricating temporary supports or other items, without prior permission of the Engineer - in -Charge.

8.1.5 If the contractor fails to return the surplus material as aforesaid, the owner will charge the contractor for such unreturned materials at panel rates, which will deducted from whatever amount is due to the contractor. In case any material issued by the Owner deteriorates during storage by the contractor, new materials will be issued to him at penal rates, but the delay in procuring such materials will be at the contractor's account only.

****

STANDARD SPECIFICATION

FOR

CABLING

SPECIFICATION NO.: MEC/S/05/26/021

ELECTRICAL & INSTRUMENTATION
(OIL & GAS SBU)
MECON LIMITED
DELHI 110 092

0	15.10.2014			
Revision	Date	Ratnadeep Gupta	Vikas Jain	Rakesh Kr. Shukla
		Prepared By	Checked By	Approved By

AMENDMENT STATUS

Sl. No.	Clause / Paragraph / Annexure / Exhibit / Drawing Amended	Page No.	Revision	Date	By (Name)	Verified (Name)

CONTENTS

1.0 SCOPE

2.0 STANDARD

3.0 CABLE SPECIFICATIONS

4.0 MISCELLANEOUS MATERIALS SPECIFICATIONS

5.0 CABLE LAYING

6.0 TERMINATION

7.0 TESTING

1.0 SCOPE

This is to define the requirements for supply, wherever applicable, the installation, testing and commissioning of the cabling system.

2.0 STANDARDS

The work shall be carried out in the best workman like manner in conformity with this specification, the relevant specifications, codes of practice of Indian Standards Institution, approved drawings and instructions of Engineer-in-Charge or his authorized representative issued from time to time. In case of any conflict between the standards, the instruction of Engineer-in-Charge shall be binding.

3.0 CABLE SPECIFICATIONS

3.1 Power Cables

Power cables for use on 415 V systems shall be of 1100 Volts grade, aluminium stranded conductor, PVC insulated, PVC sheathed, armoured and overall PVC sheathed. Power cables for 3.3 KV 6.6 KV and 11 KV system shall be aluminium conductor, XLPL insulated, screened, PVC bedded galvanized steel flat armoured and PVC sheathed cable. All L.T. Cables conform to standard specification and relevant sections of IS: 1554 Part-I and H.T. Cables shall conform to IS: 7098 (Part II). Unarmoured cables will be used wherever specified on the cable schedule.

3.2 Control Cables:

Control cables shall be 1100 Volt Grade, 2.5 mm^2 copper conductor PVC insulated PVC sheathed, single wire armoured with an overall PVC sheath, as per IS: 1554 Pt. Unarmoured cables shall be used wherever specified on the cable schedule.

3.3 Communication cables:

Communication cables shall comprise 1 pair unarmoured, 2-pair, 5-pair and multipair armoured cables of sizes as specified in the cable schedule. Minimum conductor size shall be 0.5 mm telephone system and 0.71 for plant communication system.

4.0 MISCELLANEOUS MATERIALS SPECIFICATIONS

4.1 Connectors:

Cable terminations shall be made with aluminium / tinned copper crimped type solder less lugs of M/s. Dowell's make or approved equivalent for all aluminium conductors and stud type terminals.

4.2 Cable Identification

Cable tags shall be of 2 mm thick, 20 mm wide aluminium strap of suitable length to contain cable number, equipment no., etc.

4.3 Ferrules

Ferrules shall be of approved type size to suit core size mentioned and shall be employed to designate the various cores of control cable by the terminal numbers to which the cores are connected for case in identification and maintenance.

4.4 Cable Glands:

Cable glands to be supplied shall be nickel-plated Brass double compression type of approved/ reputed make. Glands for classified hazardous areas shall be certified by CMRS.

4.5 Multi Cable transit

Multi Cable Transit shall be used for cable entry to all type of control room walls, Decks, Firewall etc. The MCT Block system should have only few components for facilitating simple, easy and quick assembly. The Multidiameter based cable transits shall be repeatedly re-openable and re-usable without the need of special tools and discarding the modules in normal operation.

Frame shall be G type galvanized or stainless steel. Block should be multi diameter blocks with center core in all the blocks / add blocks with plug / galvanized or stainless steel stay-plates / single piece compression wedge with galvanized or stainless steel bolts. Solid blocks and insert blocks should not be used. MCT should have 100% spare for each cable size / O.D. Spare blocks should be available on the frame as usable Multidiameter blocks / add blocks with center plug, so that these spare blocks in future can be used for wide range of cables also, solid blocks should not be used at all on frame. Apart form spare if there is any additional uncovered space left on frame then this uncovered space should also be filled only with usable Multidiameter

blocks with center plug only.

The Multi Cable & Pipe Transit penetrations should have been tested for Gas Tightness / water tightness & fire tests.

4.6 Cable Trays:

This shall be either prefabricated hot dip galvanized sheet steel trays or site fabricated angle iron trays as specified elsewhere. Prefabricated hot dip galvanized sheet steel cable trays shall be used for maximum support span of 2000 mm unless design is approved for larger span. For requirements of larger than 750 mm width two trays shall be run side by side. Cable trays shall be suitable for a cable weight of 50 kg/meter running length of tray. Minimum thickness of sheet steel/galvanizing shall be 2mm/86 microns respectively.

Cable trays fabricated from standard rolled sections shall use 50x50x6 /ISMC 100 Sections for runners for supporting spans limited to 2000 mm/more than 2000 mm respectively. Cross support shall be 32 x 6 mm flat/ 25x25x6 angle for width upto 500 mm/ more than 500 mm respectively.

Vertical supports for both the above type of trays shall be fabricated out of ISMC 100 and horizontal supports with 75 x 50 x 6 angle iron/ ISMC 75 as approved by Engineer-in-Charge.
If unit rate is not included in schedule of rates, then cable trays if required, shall be fabricated and installed at site as per tone rate for electrical structural supports etc.

5.0 CABLE LAYING

5.1 Cable network shall include power, control, lighting and communication cables, which shall be laid in trenches, cable trays or conduits as detailed in the relevant drawings and cable schedules. Erection of cable trays as required shall be checked after erection and marked in as built drawings. Cable routing given on the layout drawings shall be checked in the field to avoid interference with structures, heat sources, drains, piping, air-conditioning duct etc. and minor adjustments shall be done to suit the field conditions wherever deemed necessary without any extra cost.

5.2 High voltage, medium voltage and other control cables shall be separated from each other by adequate spacing or running through independent pipes, trenches or cables trays, as applicable.

All communication cables (telephones, P.A.S.) RTD Cables shall run on instrument trays/ducts/trenches. Wherever these are not available, cables shall be taken in a separate trench with a minimum clearance of 300 mm away from electrical trench as per the direction of Engineer-in-Charge and Communication

cables shall cross power cables at right angles.

All cable routes shall be carefully measured and cables cut to the required lengths, leaving sufficient lengths for the final connection of the cable to the terminal of the equipment. The various cable lengths cut from the cable reels shall be carefully selected to prevent undue wastage of cables. The quantity indicated in the cable schedule is only approximate. The contractor shall ascertain the exact requirement of cable for a particular feeder by measuring at site and avoiding interference with structure, foundation, pipelines or any other works. Before the start of cable lying, cable drum schedule; shall be prepared be electrician contractor and get that approved by Engineer-in-Charge to minimize/avoid straight through joints required. Contractor shall work out the actual number of straight through joints required.

5.4 Cables as far as possible shall be laid in complete, uncut lengths from one termination to the other.

5.5 Cables shall be neatly arranged in the trenches/trays in such a manner so that criss-crossing is avoided and final take off to the motor/switchgear is facilitated. Arrangement of cables within the trenches/trays shall be the responsibility of the Contractor. Cable routing between lined cable trench and equipment/motors shall be taken through GI pipe sleeves of adequate size. Pipe sleeves shall be laid at an angle of maximum 45° to the trench wall. In case of larger dia cables, i.e., 50 mm and above, adequately sized pipe with larger bend radius shall be provided for ease of drawing of cable or for replacement. In places where it is not possible, a smaller trench may be provided if approved by Engineer-in-Charge.

5.6 All cables will be identified close to their termination point by cable numbers as per cable schedule. Cable numbers will be punched on aluminium straps (2 mm thick) securely fastened to the cable and wrapped around it. Alternatively cable tags shall be circular in construction to which cable numbers can be conveniently punched.

Each underground cable shall be provided with identity tags of lead securely fastened every 30 m of its underground length with at least one tag at each end before the cable enters the ground. In unpaved areas, cable trenches shall be identified by means of markers as per standard drawing. These posts shall be placed at location of changes in the direction of cables and at intervals of not more than 30 M and at cable joint locations.

5.7 All temporary ends of cables must be protected against dirt and moisture to prevent damage to the insulation. For this purpose, ends of all PVC insulated cables shall be taped with an approved PVC or rubber insulating tape. Use of friction type or other fabric type tape is not permitted. Lead sheathed cables shall be plumbed with lead alloy.

5.8 RCC cable trenches shall be with removable covers. Cables shall be laid in 3 or 4 tiers in these trenches as indicated on the sectional drawings. Concrete cable trenches shall be filled with sand where specified to avoid accumulation of hazardous gases, RCC covers of trenches in process area shall be effectively sealed to avoid ingress of chemicals etc. The electrical Contractor at no extra cost shall do removal of concrete covers for purpose of cable laying and reinstating them in their proper positions after the cables are laid.

Cables shall be handled carefully during installation to prevent mechanical injury to the cables. Ends of cables leaving trenches shall be coiled and provided with a protective pipe or cover, until such times the final termination to the equipment is connected.

5.9 Directly buried cables shall be laid underground in excavated cable trenches where specified in layout drawings. Trenches shall be of sufficient depth and width for accommodation of all cables correctly spaced and arranged with a view of heat dissipation and economy of design.

Minimum depth of buried cable trench shall be 750 mm for low voltage and 900 mm for H.V. Cables, the depth and the width of the trench shall vary depending upon the number of layers of cables.

Cables shall be laid in trenches at depth as shown in the drawing. Before cables are placed, the trenches bottom shall be filled with a layer of sand. This sand shall be levelled and cables laid over it. These cables shall be covered with 150 mm of sand on top of the largest diameter cable and sand shall be lightly pressed. A protective covering of 75 mm thick second class red bricks shall then be laid flat. The remainder of the trench shall then be back-filled with soil, rammed and levelled.

5.10 As each row of cables is laid in place and before covering with sand every cable shall be given an insulation test in the presence of Engineer-in-Charge / Owner. Any cable, which proves defective, shall be replaced before the next group of cables is laid.

All wall openings / pipe sleeves shall be effectively sealed after installation of cables to avoid seepage of water inside building/-lined trench.

Where cables rise from trenches to motor, control station, lighting panels etc., they shall be taken in G.I. Pipes for mechanical protection upto a minimum of 300 mm above finished ground level.

Cable ends shall be carefully pulled through the conduits, to prevent damage to the cable. Where required, approved cable lubricant shall be used for this

purpose. Where cable enters conduit the cable should be bent in large radius. Radius shall not be less than the recommended bending radius of the cables specified by the manufacturer.

Following grade of the pipe fill shall be used for sizing the pipe size:

a) 1 cable in pipe - 53% full
b) 2 cables in pipe - 31% full
c) 3 or more cables - 43% full
d) Multiple cables - 40% full

After the cables are installed and all testing is complete, conduit ends above grade shall be plugged with a suitable weatherproof plastic compound/ `PUTTI' for sealing purpose. Alternatively G.I. Lidsor PVC bushes shall be employed for sealing purposes. The cost for the same shall be deemed to have been included in the installation of G.I. Pipe and no separate payment shall be allowed.

5.11 Where cables pass through foundation walls or other underground structures, the necessary ducts or openings will be provided in advance for the same. However, should it become necessary to cut holes in existing foundations or structures, the electrical contractor shall determine their location and obtain approval of the Engineer-in-Charge before cutting is done.

5.12 At road crossing and other places where cables enter pipe sleeves adequate bed of sand shall be given so that the cables do not slack and get damaged by pipe ends.

5.13 Drum number of each cable from which it is taken shall be recorded against the cable number in the cable schedule.

5.14 Cables installed above grade shall be run in trays, exposed on walls, ceilings or structures and shall be run parallel or at right angles to beams, walls or columns.

Cables shall be so routed that they will not be subjected to heat from adjacent hot piping or vessels.

5.15 Individual cables or small groups which run along structures/walls etc. will be clamped by means of 10 SWG GI saddles on 25x6 mm saddle bars. The cost of saddle and saddle bars shall be deemed to have been included in the installation of cables and no separate payment shall be made on this account. Alternatively small group of cables can be taken through 100 mm slotted channel/ISMC 100.

They shall be rightly supported on structural steel and masonry, individual or in groups as required, if drilling of steel must be resorted to, approval must be secured and steel must be drilled where the minimum weakening of the structure will result.

Cables shall be supported so as to prevent unsightly sagging. In general distance between supports shall be approximately 300 mm for cables up to 25 mm diameter and maximum 450 mm for cables larger than 25 mm dia.

5.16 All G.I. Pipes shall be laid as per layout drawings and site requirements. Before fabrication of various profiles of pipe by hydraulically operated bending machine (which is to be arranged by the contractor), all the burrs from the pipes shall be removed. GI Pipes with bends shall be buried in soil/concrete in such way that the bends shall be totally concealed. For G.I. Pipes buried in soil, bitumen coating shall be applied on the buried lengths. Installation of G.I. Pipes shall be undertaken well before paving is completed and necessary co-ordination with paving agency shall be the responsibility of Electrical Contractor. The open ends of pipes shall be suitably plugged with G.I. Plugs after they are laid in final position. The Contractor at no extra cost shall supply G.I. Plugs.

5.17 Cable laid on supporting angle in cable trenches, structures, columns and vertical run of cable trays shall be suitably clamped by means of G.I. Saddles/Clamps, whereas cable in horizontal run of cable trays shall be tied by means of nylon cords.

5.18 Supporting steel shall be painted before laying of cables. The painting shall be done with one coat of red lead paint and two coats of approved bituminous aluminium paint unless otherwise specified.

6.0 TERMINATION

6.1 All PVC cables up to 1.1 KV grade shall be terminated at the equipments by means of double compression type cable glands. They shall have a screwed nipple with conduit electrical threads and check nut.

All Cable entries shall be through bottom only and top entry terminations are made only after getting approval of Engineer-in-Charge.

6.2 Power cables wherever colour coding is not available shall be identified with red, yellow and blue PVC tapes. Where copper to aluminium connections is made, necessary bimetallic washers shall be used. For trip circuit identification additional red ferrules shall be used only in the particular cores of control cables at the termination points in the Switchgear/Control panels and Control Switches.

6.3 In case of control cables all cables shall be identified at both ends by their terminal numbers by means of PVC ferrules or Self-sticking cable markers. Wire numbers shall be as per schematic/ wiring /inter- connection diagram. Bidders shall have the samples of PVC ferrules/cable markers approved before starting the work. All unused spare cores of control cables shall be neatly bunched and ferruled with cable tag at both ends.

6.4 Where threaded cable gland is screwed into threaded opening of different size, suitable galvanized threaded reducing bushing shall be used of approved type, at no extra cost. All switchgear and control panels shall have undrilled gland plate.

Contractor shall drill holes for fixing glands wherever necessary at no extra cost. Gland plate shall be of non-magnetic material/aluminium sheet in case of single core cables.

6.5 The cable shall be taken through glands inside the panels or any other electrical equipment such as motors. The individual cores shall then be dressed and taken along the cable ways (if provided) or shall be fixed to the panels with polyethylene straps. Only control cables of single strand and lighting cables may be directly terminated on to the terminals.

In case of termination of cables at the bottom of a panel over a cable trench having no access from the bottom close fit hole should be drilled in the bottom plate for all the cables in one line, then bottom plate should be split in two parts along the centre line of holes. After installation of bottom plate and cables it should be sealed with cold setting compound. Cables shall be clamped over the open armouring to connect it to earth bus.

6.6 Cable leads shall be terminated at the equipment terminals, by means of crimped type solder less connector as manufactured by M/s. Dowell Electro works or approved equivalent.

Crimping shall be done by hand crimping hydraulically operated tool and conducting jelly shall be applied on the conductor. Insulation of the leads should be removed immediately before the crimping. Conductor surface shall be cleaned and shall not be left open.

6.7 <u>Cable accessories for H.V. Systems</u>

6.7.1 The 11, skilled and experienced jointers duly approved by the Engineer-in-Charge shall do 6.6 and 3.3 KV cables terminations joints. Termination including supplying of jointing kit shall be threaded in Contractor scope unless specified otherwise.

6.7.2 The termination and straight thro' joint kit. For use on high voltage system shall be suitable for the type of cables red by the contractor or the type of cables issued by owner for installation. The materials required for termination and straight through joints shall be supplied in kit form. The kit shall include all insulating and sealing materials apart from conductor fitting and consumables items. An installation instruction shall be included in each sheet.

6.7.3 The termination kits shall be suitable for termination of the cables to indoor switchgear or to a weatherproof cable box of an outdoor mounted transformer motor. The terminating kits shall preferably be of the following types:

a) TAPLEX' of M-seal make using non-linear resistance material fortress grading.

b) `PUSH-ON' type of CCI make using factory - moulded silicone rubber insulators.

c) `TROPOLINK' type of CCI makes.

d) Heat-shrinkable sleeve type of M/s. Raychem.

For outdoor installations, weather shields/sealing ends and any other accessories required shall also form part of the kit.

6.7.4 The straight thro jointing kits shall be suitable for underground-buried installation with uncontrolled backfill and possibility of flooding by water. The jointing kit shall be one of the following types.

a) `TAPLEX' of M-seal make

b) `TROPOLINK' type of CCI make

c) Heat-shrinkable sleeve type of M/s. Raychem.

6.7.5 Makes of kits other than those specified in 6.7.3 and 6.7.4 may be considered provided the Contractor furnishes type test certificates, along with the offer.

6.7.6 Type tests are to be carried out at manufacturer's works to prove the general qualities and design of a given type of termination/jointing system. The type tests shall include the following tests conforming to the latest IEC 502.2, 466 and VDE 0278 specifications. The Contractor along with the offer for the jointing system considered shall submit the type test certificates.

a) A.C. Voltage withstand dry test for 1 minute

b) Partial discharge test - Discharge magnitude small be less than 20 p.c.

c) Impulse voltage withstand test with 10 impulses of each polarity.

d) A.C. high voltage test following load cycling test with conductor temperature at 95°C.

e) Thermal short circuit test of 250°C for 1 second.

f) DC Voltage withstand test for 30 minutes.

g) Humidity test.

h) Dynamic short circuit test.

i) Salt log test

j) Impact test

7.0 TESTING:

7.1 Before energizing, the insulation resistance of every circuit shall be measured from phase to phase and from phase to ground.

7.2 Where splices or termination are required in circuits rated above 600 volts, measure insulation resistance of each length of cable before splicing and or/ terminating. Repeat measurement after splices and/or terminations are completed.

7.3 Measure the insulation resistance of directly buried cable circuits before cable trenches are back-filled. Repeat measurement after back- filling.

For cables up to 1.1 KV grade, 1KV Megger and for H.V. Cables 2.5 KV/5 KV, 2.4 KV/4.9 KV Megger shall be used

7.4 D.C. High Voltage Test shall be conducted after installation on the following and test results are recorded.

a) All 1000volts grade cables in which straight through joints have been made.

b) All cables above 1100 V grade.

For record purposes test data shall include the measure values of leakage current versus time.

The D.C. High Voltage test shall be performed as detailed below in the presence of the Engineer-in- Charge or his authorized representative only.

Cables shall be installed in final position with the entire straight through joints complete. Terminations shall be kept unfinished so that motors, switchgears,

transformers etc. are not subjected to test voltage.

The test voltage shall be as under: -

i) For cables 3.3 KV grade 5.4 KV DC

ii) For cables 6.6 KV grade 10.8 KV DC

iii) For cables 11 KV grade 18 KV DC

7.5 All cables shall be tested as per standard test Performa available with site engineer.

7.6 Cable schedule and layout drawings must be marked for AS BUILT conditions during the installation work and shall be approved by Site Engineer.

SPECIFICATION FOR
EARTHING AND LIGHTNING PROTECTION

SPECIFICATION NO. MEC/S/05/26/23A

(ELECTRICAL SECTION)
MECON LIMITED
DELHI 110 092

0	15.10.2014			
Revision	Date	Ratnadeep Gupta	Vikas Jain	Rakesh Kr. Shukla
		Prepared By	Checked By	Approved By

CONTENTS

1.0 SCOPE

2.0 STANDARDS

3.0 EARTHING CONDUCTOR/ELECTRODE

4.0 EARTHING NET WORK

5.0 INSTALLATION OF EARTH ELECTRODE

6.0 CONNECTION

7.0 TESTING

8.0 TEST PROFORMA

1.0 SCOPE:

The intent of this specification is to define the requirements for the supply, installation, testing, and commissioning of the Earthing System.

2.0 STANDARDS:

The work shall be carried out in the best workmanlike manner in conformity with this specification, the relevant specifications/codes of practice of Indian Standard Institution, approved drawings and instructions of the Engineer-in-Charge or his authorized representative issued from time to time. In case of any conflict between the standards, the instructions of Engineer-in-Charge shall be binding.

3.0 CONDUCTOR ELECTRODE:

The main grid conductor shall be hot dip galvanized G.I. Flat or PVC insulated aluminum conductor/copper conductor. Sizes for main conductors shall be marked on the drawings. Thickness of hot dip galvanizing shall not be less than 75 microns.

4.0 EARTHING NETWORK:

4.1 The earthing installation shall be done in accordance with the earthing drawings, specifications and the standard drawings of reference attached with this document. The entire earthing system shall fully comply with the Indian Electricity Act and Rules framed thereunder. The contractor shall carry out any changes desired by the Electrical Inspector or the owner, in order to make the installation conform to the Indian Electricity Rules at no extra cost. The exact location on the equipment shall be determined in field, in consultation with the Engineer-in-Charge or his authorized representative. Any changes in the methods, routing, size of conductors etc. shall be subject to approval of the Owner/Engineer-in-Charge before execution.

Excavation and refilling of earth, necessary for laying underground earth bus loops shall be the responsibility of the contractor.

4.3 The earth loop impedance to any point in the electrical system shall have a value which will ensure satisfactory operation of protective devices.

4.4 The main earth loop shall be laid at a depth of 500 mm below grade level. Wherever cable trenches are available, the earth lead shall be laid in the trenches and shall be firmly cleared to the walls of concrete lined trenches. The earthing strip shall be protected against mechanical damage.

4.5 In process unit areas, the earthing cable shall be run along cable trays wherever specified in the layout drawings. The earthing cable shall be suitably cleated and electrically bonded to the cable tray at regular intervals.

4.6 Joints and tapping in the main earth loop shall be made in such a way that reliable and good electrical connections are permanently ensured. All joints below grade shall be welded and suitably protected by giving two coats of bitumen and covering with Hessian tape. All joints above ground shall be by means of connectors/lugs as far as practicable. Tee connectors shall be used for tapping, earth leads from the main earth loop wherever it is installed above ground. Earthing plates shall be provided for earthing of two or more equipment at a place from earth grid. Where aluminum cable risers are to be connected to the underground GI earth bus, the aluminum cable riser shall be taken to the nearest earth pit and terminated through a bolted joint. If this is not practicable, then a G.I. risers shall be brought above grade and a bolted joint shall be made between this GI riser and the aluminum cable termination. This G.I. Riser shall be protected applying two coats of bituminous paint/bitumen on the exposed portion.

4.7 Conduits in which cables have been installed, shall be effectively bonded and earthed. Cable arm ours shall be earthed at both ends.

5.0 <u>EARTH ELECTRODES</u>:

5.1 Earth pipe electrodes shall be installed as shown in the earthing layout drawings and in accordance with the standard drawings of reference and IS:3043. Their location shall be marked to enable accurate location by permanent markers.

5.2 All earth electrodes shall preferably be driven to sufficient depth to reach permanently moist soil. Electrodes shall preferably be situated in a soil which has a fine texture and which is packed by watering and ramming as tightly as possible. Wherever practicable, the soil shall be dug up, all lumps broken and stones removed from the immediate vicinity of the electrodes.

5.3 All earth electrodes shall be tested for earth resistance by means of standard earth test meter. The tests shall take place in dry months, preferably after a protracted dry spell. If necessary, a number of electrodes shall be connected in parallel to reduce the earth resistance. The distance between two electrodes shall not be less than twice the length of electrode.

5.4 The electrodes shall have a clean surface, not covered by paint, enamel, grease or other materials of poor conductivity.

5.5 The exact location and number of earth electrodes required at each location shall be determined in the field in consultation with the owner/Engineer-in- Charge, depending on the soil strata and resistively, to meet the ohmic values prescribed in clause 5.3. Earth Electrodes shall be located avoiding interference with road, building foundation, column etc. Individual earth electrode shall be provided for each lightning arrestor and lightning mast. The electrodes shall be so placed that all lightning protective earths may be brought to earth electrode by a short and straight a path as possible to minimize surge impedance.

5.6 The disconnect facility shall be provided for the individual earth pits to check their earth resistance periodically. All the earth electrodes shall be suitably numbered and this should be indicated in as built drawings.

6.0 CONNECTION:

6.1 All electrical equipment is to be doubly earthed by connecting two points on equipment to a main earthing ring. The earthing ring will be connected via links to several earth electrodes. The earth grid formed shall be a closed loop as shown in the drawing with earth electrodes connected to the grid with double strip connection. The cable armour will be earthed through the cable glands.

6.2 In hazardous areas all major process equipments shall be connected to the earthing ring by means of anti- loosening connections and all pipelines will be bonded and earthed on entering the battery limit of the process area.

6.3 The following shall be earthed.

1. Transformer neutrals, CT/PT neutrals.

2. Neutral Grounding Resistors.

3. Transformer Housing.

4. Lightning Arrestors.

5. All switchgear and their earth buses, bus duct.

6. Motor Frames.

7. Non-current carrying metallic parts of electrical equipment such as switchgear, switch racks, panel boards, motor control centers, lighting, power and instrument panels, push button stations, cable trays, pipes, conduits, terminal boxes, etc.

8. All fences, gates/enclosures, housing electrical equipment

9. All steel structures, rails etc. including bonding between sections.

10. Shield Wire

11. Structural steel and Columns.

12. Loading racks.

13. Lighting Mast, poles.

14. Lighting rods (Mast).

15. Tanks and vessels containing flammable materials.

16. Rotating parts of the agitators, pumps etc. through spring loaded brushes of suitable grade.

17. Earth continuity conductor shall be provided for flanges.

Conductor size for connection to various equipments shall be as indicated on Earthing Layout Drawings.

6.4 Two distinct conductors directly connected to independent earth electrodes, which in turn, shall be connected to the earth too, shall earth system.

The earth connection shall be properly made. A small flexible aluminum cable loops to bridge the top cover of the transformer and the tank shall be provided to avoid earth fault current passing through fastening bolts when there is a lightning surge, high voltage surge or failure of the bushings.

6.5 Each Lightning Arrestor shall be connected to a separate electrode located as close as possible to it and within the fenced area for each set of arrestors. The three nos. electrodes for each set of arrestors shall be spaced about 5 meters apart so that they are all within the enclosing fence. Each of these electrodes shall be connected to the main earth grid.

6.6 The shield wire shall be connected with the main grid solidly and not through supporting steel structures.

6.7 All paint, scale and enamel shall be removed from the contact surface before the earthing connections are made.

6.8 All earthing connections for equipment earthing shall be preferably from the earth plate mounted above ground. In case of G.I. Earth Loop all underground "T" connections shall be of the same size as main loop however in case of PVC insulated aluminum conductor loops underground joints shall be completely avoided. Connections to motors from earth plate or main loop conductor brought above ground shall not be less than following:

i) No.8 SWG G.I. Wire upto 3.7 KW motors.

ii) 3/8" DIA G.I. FINE WIRE ROPE for all motors above 3.7 KW upto 30 KW with tinned copper lug at both ends or 35 mm^2 PVC insulated stranded aluminum conductor with crimped lug.

iii) 5/8" DIA G.I. FINE WIRE ROPE OR 70 mm^2 PVC insulated aluminum stranded conductor for motors above 30 KW upto 75 KW terminated as described above.

iv) For all motors above 75 KW conductor size shall be same as that of loop conductor with equivalent size flexible, if required.

Anchor bolts or fixing bolts shall not be used for earthing connection.

6.9 All hardware used for earthing installations shall be hot dip galvanized or zinc passivated. Spring washers shall be used for all earthing connections of equipment.

6.10 Lighting fixtures shall be earthed through the extra core provided in the lighting cable for this purpose.

7.0 TESTING:
Earthing systems/connections shall be tested as follows:

7.1 Resistance of individual electrodes shall be measured after disconnecting it from the grid.

7.2 Earthing resistance of the grid shall be measured after connecting all the electrodes to the grid. The resistance between any point on the metallic earth grid and the general mass of earth shall not exceed 1 ohm.

7.3 The resistance to earth shall be measured at the following:

a) At each electrical system earth or system neutral earth.

b) At each earth provided for structure lightning protections.

c) At one point on each earthing system used to earth electrical equipment enclosures.

d) At one point on each earthing system used to earth wiring system enclosures such as metal conduits and cable sheaths or armor.

e) At one point on each fence enclosing electrical equipment.

Measurement shall be made before connection is made between the ground and the object to be grounded.

8.0 LIGHTNING PROTECTION

8.1 Lightning protection system shall generally comprise lightning finials (air terminals), roof conductors, down conductors, test links, and earth electrodes. the number, types, materials and sizes shall be in accordance with the drawings.

8.2 Air terminals shall be mounted on top of buildings or structure as required. All air terminals shall be inter-connected with roof conductors,pipes,hands rails or any other metallic projection above the roofs shall also be bonded to the roof conductors.

8.3 Down conductors from air terminals or from roof conductors shall be routed as directly as possible to the test links on earth buses, with minimum bends.

8.4 All provisions regarding connections of conductors for equipment earthing system shall also apply to lightning protection system.

8.5 In corrosive atmospheres, plumbing metal for corrosion protection shall cover lightning finials or air terminals.

9.0 TEST PROFORMA

(INSTALLATION TESTING REPORT EARTHING INSTALLATIONS)

1. Earth system data

   Type of electrode :

   Total number of electrodes :

   Main grid size :

   Material :

2. General checks Put Tick √ if O.K.; otherwise give details.

   Construction of earth electrodes as per Standard.

   Size of earth conductor for various equipment O.K. as per Standard.

   Minimum distance kept between two electrodes.

   Cleanliness and tightness of connectors.
   Inspect bolted & clamped connectors.

3. TESTS

3.1 Measured earth resistance of each electrode in ohms

No. 1

2

3

4

5

3.2 Measurement of earth grid resistance (with all electrodes connected to grid)

a) At each electrical system earth or system neutral earth. :

b) At each point provided for structure lightning protection :

c) At one point on each earthing systems used to earth electrical equipment enclosure :

d) At one point on each earthing systems used to earth wiring systems such as metal conduits etc. :

e) At one point on each fence enclosing electrical equipment. :

4. Remarks:

PROJECT:	UNIT:		
TESTED BY	WITNESSED BY		DATE
CONTRACTOR	MECON	OWNER	

TECHNICAL SPECIFICATION FOR TELECOM WORKS

GENERAL SPECIFICATION FOR HDPE DUCT LAYING AND TESTING

Doc No. : MEC/ S/05/E5/T/ 001A

MECON LIMITED
(A Govt of India Undertaking)
DELHI – 110092

@MECON Limited 2021; all rights reserves

TABLE OF CONTENTS

1.0 PURPOSE 3

2.0 SCOPE 3

3.0 REFERENCES 3

4.0 RESPONSIBILITIES 3-4

5.0 EQUIPMENTS & ACCESSORIES 4

6.0 METHODOLOGY 4-5

7.0 HDPE DUCT LAYING 5-7

8.0 BLOWING & JOINTING PIT 7-8

9.0 JOINTING OF HDPE DUCT 8

10.0 SEALING OF HDPE DUCT 8

11.0 CROSSINGS 9

12.0 TESTING OF HDPE DUCT 10

13.0 BACKFILLING 11

14.0 HSE 11

15.0 DOCUMENTATION 11

1.0 PURPOSE

The purpose of this procedure is to lay guidelines, requirements and to establish a method or a system to control HDPE duct laying, jointing and testing for installation of Optical fibre cable.

2.0 SCOPE

The scope covers laying of permanently pre lubricated HDPE conduit, jointing and testing with taking all the statuary approvals, appraisal and taking cognizance of site conditions along entire pipeline length. All procedures and precautions as required for pipeline laying shall be followed for HDPE duct laying for encasement of Optical fibre cable.

3.0 REFERENCES

Following documents in totality or in part shall form the reference documents:

1. MECON Specification: MEC/S/05/E5/T/001, Rev-0, Specification for OFC and HDPE Duct laying & associated works
2. MECON Specification: MEC/TS/05/E5/T/037.
3. **ASME B 31.8** Latest Edition: Gas Transmission and Distribution Piping System
4. Relevant Standard Drawings enclosed with the tender Documents
5. Attached Inspection and Test Plan
6. Approved OFC Alignment Sheet

4.0 RESPONSIBILITIES

Resident Construction Manager	- Shall report to the Project manager. - Shall be responsible for control, supervision and direction for implementation and execution of construction plans using calibrated Measuring and Test Equipment
Site QA/QC In-charge	- Shall report to Head of QC at HO and Project Manager, - Shall be responsible for overall control of QC activities and sub- contractors QC activities, implementation of QAM and HSE Plan, supervision and allocation of inspection teams, develop inspection and test plans.

- Shall be responsible for custody, maintenance calibration and issuance of all measuring and Test Equipment.
- Shall maintain status log of all measuring and test equipment.

QC Engineer	- Reports to QA/QC in-charge
	- Ensures proper implementation of this procedure
	- Checks and verifies the activity
	- Verifies and countersigns Stringing report
HSE Officers	- Reports to Construction Manager
	- Manages the implementation of all safety requirements during stringing operations.
	- To verify and ensure that the communication System is working properly and that Emergency equipment is in place.

5.0 EQUIPMEMTS & ACCESSORIES

The following equipments and accessories shall be provided for the work at working location:

HDPE Duct (40/33mm), Air Compressor, Push fit coupler, End plug, Blowing & jointing pit, Trailer, Jack Stand and all other tools and tackles shall be provided for completion of job as per project requirements.

6.0 METHODOLOGY

Contractor shall submit credentials/experience of team for laying works.

Contractor shall submit OFC & HDPE Duct Alignment Sheet for approval to Client/Mecon before start the laying work

Contractor shall carry out all works related to the HDPE duct laying, jointing and testing.

All material like HDPE Duct, OFC and other associated accessories shall be under contractor's scope for successful completion of the HDPE Duct laying and OFC installation.

Contractor shall also obtain all statutory approvals, crossing approvals, appraisal and taking cognizance of site-conditions, Government rules and regulations/laws. All procedures and precautions as required for pipeline laying shall be followed for HDPE duct laying.

Permanently lubricated HDPE conduit will be laid (as per the approved drawing) along the entire length of the pipeline route and crossing of the pipeline shall be avoided, except at the repeater stations and as per exigencies arising due to site conditions.
The duct shall be checked usually for ensuring good workmanship that the duct shall be free from Blisters, Shrinks, Holes, Hacking, Chicks, Scratches, Roughness, Break and other defects. The duct shall be smooth clean round. The ends shall be cleanly cut and shall be squire with axis of the duct.

The encasement must be unreeled from the bottom of the coil. The length marking on duct will be recorded from beginning till end of the duct length. Duct shall be laid in a flat bottom trench free from stones, sharp edged debris. No water should be present in trench, while laying the duct. Duct will be placed in trench as straight as possible and it shall be ensured that the laid ducts are free from any twist.

All necessary precautions shall be taken during loading, transportation and unloading and any other handling operations in order to avoid damages to the encasement.
Contractor has to ensure parallel laying of duct. Ends of duct shall always be closed with end plugs to avoid ingress of mud, water or dust. Internal soiling of the encasement shall be prevented.
The duct ends shall always be sealed with sealing cap during unreeling and lowering. Temporary sealing shall be carried out with a sealing cap during handling, transportation, lowering in etc.
The direction of HDPE Duct laying w.r.t to pipeline shall be as per the decision of EIC at site.

7.0 LAYING OF PERMANENTLY LUBRICATED HDPE CONDUIT:

Permanently pre-lubricated HDPE telecom conduits shall be laid for installation of Optical Fibre Cable. The conduits shall be continuous in length of 1 km. The HDPE laying will follow lowering of pipeline. HDPE conduit should be laid in the pipeline trench bed along with OFC as per approved Dwg./Sketch. The duct shall be placed over 50 mm soft padding of sand or soft soil.
Contractor has to ensure the laying of HDPE conduit without any snaking or waving and the HDPE conduit should rest on the trench bed i.e. the pipe should not hanging in the trench bed. The trench will be back filled after ensuring the correct positioning of HDPE conduit as mentioned above.

Following procedure should be followed for laying HDPE conduits:

(A) Moving Trailer Method:

This method should be used when the path of duct does not contain any road/railway bores or utility crossings. Following steps should be followed:

1. Fix the Jack Stand on the trailer properly.
2. Mount the duct coil reel/duct drum on the Jack stand.
3. Bring the trailer at the start point from where the duct is to be laid.
4. Move the trailer slowly along the trench route and uncoil the duct from the bottom of the reel/drum and place into the trench. Avoid any over spinning of the duct while uncoiling it from the drum.
5. HDPE duct should be laid straight as much as possible without snaking and waving.
6. Minimum bending radius of OFC and Duct to be taken into account.
7. Trench bottom for HDPE duct shall be clean, smooth, and free from stones. Proper care shall be taken so that there are no kinks, loops, twist in the duct while laying. Feed the HDPE duct directly into trench without entanglement so that HDPE duct is laid without criss crossing. HDPE duct ends should be cut with the help of HDPE duct cutter and after proper coupling the duct shall be joined using coupler.

(B) Manual Laying:

This method is used when there is an obstruction along the route. Following steps should be followed:

1. Place the Jack stand along the side of the trench. Place the drum on the jack with correct positioning of the drum i.e. the duct reel should uncoil from the bottom of the drum. Duct reel should not uncoil form the top of the drum.
2. Rotate the drum slowly so that the duct comes off from drum slowly and the duct reel should not oversee while pulling HDPE conduit for installation.
3. Unroll the duct to the required length spacing the workers after every 15 to 20 mtrs.
4. If any obstruction like utility crossings or road/railway crossings comes in then ensure the HDPE conduit is drawn under the obstruction or through the crossing without requiring joint in between.
5. The contractor can lay the duct into the trench either directly from the drum or temporally lay the duct along the trench and then place it later in the trench.

- **Tensioning of the HDPE duct after laying:**

1. Determine the direction of installation and set the reel. Duct should be unrolled from the bottom of the coil.
2. Place the duct inside the trench.

3. Let two workers stand on the duct at start point and two other workers stretches the duct, thereby giving tension, upto of 30-40 meters.
4. After covering the 30-40 meter backfill the trench at that point to hold the duct in position and to avoid loss of tension.
5. Repeat the above procedure till the entire duct length of 1 KM laid with proper tensioning.
6. Backfill the entire trenches.

If it is not possible to connect the HDPE encasement immediately after or during lowering-in, the encasement will be placed down in such a way that the ends overlap by 1 mtr and the end shall be sealed by sealing cap.

Wherever GI pipes are used at crossings, rubber bushes shall be used at the two ends of the GI pipes to protect the damages of HDPE pipes. (Prior approval for use of GI pipes shall be taken).

After laying of duct, the spare space between duct and wall of jointing and blowing pits shall be fitted with the proper sealing compound.

To lay the next HDPE duct drum length, couple the laid HDPE ducts to the new drum to be laid with the help of a coupler with same procedure explains above.

8.0 BLOWING PIT / JOINTING PIT:

The cable blowing pit shall enclose HDPE section ends from both sides at every 1Km nominal distances or as per direction of Engineer-in-charge. The pit shall be circular (having internal diameter of 1200mm & wall thickness of 100mm) and made of reinforced concrete with lifting lungs cast into the lids during construction itself.

The pits shall be provided with suitable arrangement for the entry of one number of HDPE conduits (40/33 mm outer dia.) from both sides so that HDPE conduit should enter the pit at a height of 150mm above the bottom level of pit to prevent entry of mud, insects, etc. and the spare space between the duct and the wall of pit shall be filled with proper sealing compound (filo form).

The blowing pit shall be provided at every 1KM distance and at each station (DT/RT/IP/SV) locations. The pits shall be provided with suitable GI brackets to facilitate storage of 40m of the optical fiber cables (20m from each side) in jointing pit and 10m in blowing pit.

The blowing/jointing pit will be completely filled with sand from bottom to top level of the pit to prevent entry of rodents after blowing and jointing of OFC, covering joint enclosure and HDPE conduit completely.

At all river crossing locations, blowing pit with proper OFC loop length at both the wide river bank end shall be provided. The jointing of OFC near river bank should be avoided.

Drawing for blowing pit & jointing pit to be submitted for approval (as per tender) and the installation of BP/JP shall be as per the approved drawing. GPS location of each BP & JP to be taken and recorded in pit installation report.

9.0 JOINTING OF HDPE CONDUITS:

In case of crossings there may be the possibility that laid HDPE section length may have to be joined to other laid HDPE section length. The jointing of two ends of HDPE conduit should strictly be done with the help of Coupler, which will be made of similar material. Installation of HDPE coupler to join the laid HDPE conduits should be done strictly with the help of C-spanners for proper tightening of Coupler. Joints may also likely to come up due to road/ river/ nallah/ railways crossing. All efforts shall be made to minimize joints. The coupling should be water and air tight and should be able to withstand minimum pressure of 10 bar.

Following procedure should be followed for jointing HDPE conduits:

1. Cut the two ducts that are to be joined at the same place where they overlap. Cutting should be done in such a way that the duct ends match with the coupler perfectly because is very important that coupling joints be airtight. Proper pipe shears or cutter must be used for smooth cutting Hacksaw should not be used to cut the duct.
2. Debar both the inside and the outside edges of the duct with a debarring tool.
3. Apply a small amount of proper lubricant for better installation of plastic coupler.
4. Tighten the plastic coupler with C-Spanner.
5. GPS Location of all HDPE Duct Coupler to be taken and recorded in report.

10.0 SEALING OF HDPE CONDUIT:

The Contractor shall supply and put end plugs to seal the end of HDPE ducts after laying of same to prevent ingress of sit, dust etc. prior to back filling.

The end plug should be made of similar material as that HDPE conduit does not change its position due to heavy impact of soils or due to any other cause.

11.0 CROSSINGS:

11.1 OPEN CUT CROSSING (UNCASED CROSSING):

- For these crossing OFC cable shall be laid in the HDPE conduit.
- Length of HDPE duct shall be estimated with the help of survey documents & Alignment Sheet.
- For Road crossing, the HDPE conduit shall be extend for minimum 3 meters on each side of the road.
- For water crossings, HDPE conduit shall be used till ~5m of the normal underground trench depth, on each side of the crossing. The bank protection measure being provided for pipeline shall also be extended to take care of optical fibre cable.
- During the pulling operation continuous monitoring of pulling tension is necessary. The winch used shall have adjustable speed and recording device for pulling tension.
- HDPE should properly seal using heat shrinkable cap. The cap shall become tight with HDPE to seal the conduit properly.
- Proper care shall be taken while inserting the cable in duct to avoid damage.

11.2 CROSSING BY BORING (CASED CROSSING):

- The pipeline crossing executed by boring/jacking/HDD/Thrust Boring.
- In case of crossing to be done by with boring/jacking/HDD/Thrust Boring the OFC shall be laid in HDPE conduit shall be sub-ducted in a steel conduit.
- The ends of the each conduit shall be sealed immediately after installation of sub duct and re-sealed when the cable has been installed inside the conduit.
- At bends and leading-in-points, a flexible PVC/HDPE pipe may be used for protection and maintenance of the required bending radius of minimum 20 times outer diameter of the cable.

11.3 CROSSING BY HORIZONTAL DIRECTIONAL DRILLING (HDD):

For crossing to be done through HDD the HDPE conduit shall be sub-ducted in a CS conduit with double run of HDPE conduit. Across HDD crossing, OFC to be blown in both HDPE ducts for crossing length of more than 500 mtrs, for length less than 500 mtrs, OFC to be blown in only one duct.

11.4 UTILITY/ FOREIGN SERVICES:

In case the pipeline or any other utility/ service needs to be crossed, the HDPE shall be laid at least 0.5m below the pipe line/ utility/ service and the OFC shall be laid through HDPE Conduits for protection.

12.0 PROCEDURE FOR HDPE DUCT TESTING:

HDPE conduits will be tested for proper laying, crush deformity and pressure testing. The Contractor shall be fully responsible for any obstruction and deformity in the laid HDPE conduit and shall have to remove the obstruction/ deformity of any kind before blowing Optical Fiber Cable into the duct.

Following tests are to be carried out on the laid HDPE.

1) Duct Cleaning: Following steps are to be followed for cleaning the laid HDPE conduit:

- Compressed air should be blown through the duct in order to remove any dirt and water that has accumulated inside the duct with the help of air compressor. A short blast of air of about 1 bar shall be blown through the duct for about 1 minute.
- Duct sponges will be blown through the duct to further remove any dirt and water from the duct segment. Sponges should be blown into the duct clean and a dry sponge comes out of the duct.

2) Duct Calibration and integrity Test:

- This test is to be done to check the roundness and the integrity of the duct. During installation or backfill process there is possibility of flattening, twisting or kinking of the duct. This testing process shall be conducted by blowing a plug or probe through the duct segment with compressed air.
- Calibration shall be done by a simple sender like small probe, which shall be blown through the duct by compressed air. This probe shall be detectable using a HF Detector.
- The calibration process shall be considered completed once the probe exits the duct at the other end after an uninterrupted pass.
- When obstruction in the duct is found, these obstructions have to be removed by removing the damaged or deformed portion of the duct and placing a new section of duct.

3) Air Pressure Test:

- A static pressure test is to be carried out in order to verify air tightness for the purpose of cable blowing as well as to prevent ingress of water or dirt during the lifetime of the duct.
- To verify the air tightness, pressure inside the duct should be brought up to 10 bar for two minutes. A pressure drop of 0 to 0.5 bar per minute of the test is acceptable. If a higher-pressure drop is detected, no further test should be conducted until the leak has been located and repaired.
- After pressure teasing duct ends should be sealed with the help of duct plugs to prevent entering of any dirt and water inside it.

After testing the duct both the ends of HDPE conduit shall be plugged again using end plugs.

13.0 BACKFILLING:

250 mm padding of sand / soft soil shall be done covering the HDPE conduit and then a warning mat (PVC sheet, red colour, and warning in white, 150mm * 0.1mm in the Bidders scope) shall be placed. After proper padding of the warning mat for min 100mm, the trench shall be backfilled.

14.0 HEALTH, SAFETY & ENVIRONMENT

Health, Safety precautions must be taken into account and procedures must be followed when working with Optical Fiber Cable, associated material and test equipment.

When trimming or handling fibers, care should be taken to avoid splinters entering the skin. Once under the skin the splinters are difficult to see and difficult to remove. All loose fiber pieces should be correctly disposed of and workbenches and equipment must be kept clear and clean at all times.

The Optical ports transmit and receive, of all measuring equipment must be capped when the equipment is not in use as dirt and dust can affect the connector and it's mating test connector. All measurement equipment fitted with lasers emits low energy, which is invisible to the naked eye hence precautions must be taken.

15.0 DOCUMENTATION

Appendix-01	Inspection & Test Plan for HDPE Duct Laying
Appendix-02	Inspection Report for HDPE Duct Laying
Appendix-03	Inspection Report for HDPE Duct Testing

Note:

- *In case of any conflict between the requirements of this procedure and IGGL/ MECON Specification the later shall govern until and unless specific intension is meant.*
- *Standard Operating Procedure (SOP) shall be strictly followed.*

	PROJECT NAME	
	CLIENT:	
	CONSULTANT: MECON LIMITED	
	CONTRACTOR:	
	DOC.NO. : Rev.:00 Appendix: 01	

INSPECTION & TEST PLAN FOR HDPE DUCT LAYING & TESTING

Sr. No.	Activity Description	Verifying Record	Extend of Inspection	
			Contractor	MECON / CLIENT
A	**HDPE Duct Laying:**			
1	Availability of Approved Work Procedure	Approved Procedure	W	A
2	Availability of Approved Alignment Sheet	Approved OFC/HDPE Alignment Sheet	W	A
3	Review of Calibration Certificate of Instruments/Testing Equipments	Calibration Certificate	W	R
4	Review materials for work and test certificate from approved source		W	R
5	Trench Inspection		W	W/RW
6	HDPE Duct Laying & Coupling		W	W/RW
7	Carbon Steel Duct Installation		W	W/RW
8	Installation of Blowing Pit & Jointing Pit		W	W/RW
9	HDPE Duct Sealing/Ens Plugs/End Cap		W	W/RW
10	Padding / Warning Mat		W	W/RW
11	Backfilling			
B	**HDPE Duct Testing:**			
1	Air Pressure Test		W	W
2	Duct Calibration & Integity Test		W	W
3	Duct Cleaning		W	W/RW
4	Leak Test		W	W

Legends:- W : Witness P : Perform R : Review

RW : Randon Witness A : Approval

PREPARED BY Contractor	REVIEWED & APPROVED BY MECON/CLIENT

PROJECT NAME
CLIENT:
CONSULTANT: MECON LIMITED
CONTRACTOR:
DOC NO.: Rev.: 00

INSPECTION REPORT FOR HDPE DUCT LAYING

Appendix: 01	**Batch No.:**	**Report No.:**
Drum No./Coil No.:	**Chainage:**	**Date:**
Section/Spread:		

Sr. No.	HDPE Duct Chainage/Joint No.		Section Length (Mtrs.)	Padding	Warning Mat	Couplers GPS Location	Remarks
	From	To					
1							
2							
3							
4							
5							
6							
7							
8							
9							
10							

Progress	Today	Previous	Cumulative

Remarks:

For Contractor	FOR MECON/CLIENT
SIGN	SIGN
NAME	NAME
DATE	DATE

SAMPLE COPY

	PROJECT NAME	
	CLIENT:	
	CONSULTANT: MECON LIMITED	
	CONTRACTOR:	
	DOC NO.: Rev.: 00	

INSPECTION REPORT FOR HDPE DUCT TESTING

Appendix: 02	**Batch No.:**	**Report No.:**
Drum No./Coil No.:	**Chainage:**	**Date:**
Section/Spread:		

Sr. No.	HDPE Duct Chainage/Joint No.		Duct Length (Mtrs)	Duct Cleaning	Duct Calibration & Intigrity Test	Air Pressure Test	Remarks
	From	To					
1							
2							
3							
4							
5							
6							
7							
8							
9							
10							
Progress			Today		Previous		Cumulative

SAMPLE COPY

REMARKS:

For Contractor	For MECON/CLIENT
SIGN	SIGN
NAME	NAME
DATE	DATE

MECON LIMITED
(A Govt of India Undertaking)
DELHI – 110092

GENERAL SPECIFCATION FOR OFC LAYING, DRUM TESTING, OFC JOINTING & OFC TESTING

Doc No. : MEC/ S/05/E5/T/ 001B

@MECON Limited 2021; all rights reserves

TABLE OF CONTENTS

1.0 PURPOSE 3

2.0 SCOPE 3

3.0 REFERENCES 3

4.0 RESPONSIBILITIES 3-4

5.0 EQUIPMENTS & ACCESSORIES 4

6.0 METHODOLOGY/PROCEDURES 4-10

7.0 TERMINATION 10-11

8.0 TESTING 11-13

9.0 CROSSINGS 13-14

10.0 MARKERS 14-15

11.0 HEALTH,SAFETY & ENVIRONMENTS 16

12.0 DOCUMENTATION 16

1.0 PURPOSE

The purpose of this procedure is to lay guidelines, requirements and to establish a method or a system to control OFC Laying/Blowing and jointing.

2.0 SCOPE

The scope covers testing of OFC drum, blowing of OFC Cable, jointing of OFC and guidelines for testing of OFC between the repeater station into the double run of HDPE conduit at both side of the pipeline, with all statuary approvals, appraisal and taking cognizance of site conditions along entire pipe line length. All procedures and precautions as required for pipeline laying shall be followed for OFC blowing.

3.0 REFERENCES

Following documents in totality or in part shall form the reference documents:

1. MEC/S/05/E5/T/096 B, Technical specification of Optical Fiber Cable & Accessories
2. MEC/S/05/21/01, Rev-0, Specification for Mainline Construction (Onshore)
3. **ASME B 31.8** Latest Edition: Gas Transmission and Distribution Piping System
4. Relevant Standard Drawings enclosed with the tender Documents
5. Attached Inspection and Test Plan
6. Approved OFC Alignment Sheet

4.0 RESPONSIBILITIES

Resident Construction Manager	- Shall report to Project Director Pipeline, - Shall be responsible for control, supervision and direction for implementation and execution of construction plans using calibrated Measuring and Test Equipment
Site QA/QC In-charge	- Shall report to Head of QC at HO and Project Manager, - Shall be responsible for overall control of QC activities and sub- contractors QC activities, implementation of QAM and HSE Plan, supervision and allocation of inspection teams, develop inspection and test plans. - Shall be responsible for custody, maintenance calibration and issuance of all measuring and

	Test Equipment. - Shall maintain status log of all measuring and test equipment.
QC Engineer	- Reports to QA/QC in-charge - Ensures proper implementation of this procedure - Checks and verifies the activity - Verifies and countersigns Stringing report
HSE Officers	- Reports to Construction Manager - Manages the implementation of all safety requirements during stringing operations. - To verify and ensure that the communication System is working properly and that Emergency equipment is in place.

5.0 EQUIPMEMTS & ACCESSORIES

The following equipments and accessories shall be provided for the work at every location:

Optical Fiber Cable, Lifting jack for cable drum, OFC Blowing Machine & Compressor, Optical Fiber Fusion Splicer, Fusion Splicer Tool Kit, Optical Time Domain Reflectometer (OTDR), JCB/Tractor with Trolley, Blowing Pit, Jointing Pit, OFC Jointing Closure, FTC with Pigtail for Termination, Loop Box tools, Patch Cords, Cable Ties, Electronic Markers, Joint Markers, OFC Markers, Optical power source & meter and all other tools and tackles shall be provided for completion of job as per project requirements.

6.0 METHODOLOGY

6.1 PREPARATORY WORKS:

12 Fibers armoured optical cable shall be laid in permanent lubricated 40/33mm HDPE Telecom Duct/Conduit along with the pipeline by air blowing method.

Contractor shall submit credentials/experience of team during OFC laying works.

Contractor shall submit OFC & HDPE Duct Alignment Sheet for approval to Client/Mecon before start the laying work.

Contractor shall carry out all works related to the OFC installation, jointing and testing. All material like OFC, HDPE Duct and other associated accessories shall be under contractor's scope for successful completion of the OFC installation.

Contractor shall also include obtaining all statuary approvals, crossing approvals, appraisal and taking cognizance of site-conditions, Government rules and

regulations/laws. All procedures and precautions as required for pipeline laying shall be followed for OFC laying.

Contractor shall plan the cable-laying operation such that to the extent possible, complete drum length of cable can be laid without cutting in-between by preparing OFC Alignment Sheet.

The cable shall be laid through permanently lubricated HDPE conduit in the pipeline trench at both side of the pipeline in the direction of gas flow specified by the section-in-charge or as per approved drawing.

The OFC drum length will be 4/2 ± 2.5%. Same should be cross checked with actual drum length before finalizing the location of jointing pit in Alignment sheet preparation. Shorter length drums (less than 4/2 ± 2.5%) if any shall be updated in alignment sheet. After completion of laying Contractor shall submit "As Built Drawing" as defined in the Mecon/HPCL specification.

Special care should be taken to avoid any twist or damage of duct/cable while laying Optical Fiber Cable under road, nallah, railway line, culvert as specified elsewhere in the tender document.

6.2 OFC BLOWING:

Before OFC laying the contractor shall ensure that the laid duct is checked for leak proof and continuity. The laid duct shall also be free of blisters, shrink hooks, break and other defects. The internal and external pipe surface shall be smooth. Duct shall not display any stress edge grooves or shrink marks. A line sketch showing location of joint pits with proper chainage shall be maintained and the same to be submitted to HPCL /MECON.

Drum Testing:

Drum testing shall be performed at client's store/yard upon prior blowing of OFC cable.

i. At first OFC cable drum will be opened and inspected for any physical damage before the OTDR test. If any physical damage to the cable is observed it will be recorded and corrective measures to be taken.
ii. OFC to be prepared for testing by removal of atleast 50cms outer sheath of the cable.
iii. Cutting of the loose tube with a suitable cable cutter and bare the fibers safely.
iv. Cleaning of the fibers with Hexane or Isopropanol and tissue papers to remove the moisture resistance jelly.
v. The OFC shall be tested thoroughly as per standard test procedure before and after laying, during the operation of OTDR test of cable drum. The bare, clean and

prepared fiber shall be made properly terminated to the OTDR set through the reusable mechanical splice pigtail.

- Start the OTDR and select the correct wavelength and refractive index for the test of single mode fiber cable.
- Set the first marker at the beginning of the trace after the initial tail of the dead zone and the second marker at the end of the trace, the result will display as dB/Km at a specific wavelength being tested.
- Set the OTDR at Real Time mode and set the range, pulse width and zoom so that the entire Fiber length will be visible on the screen than set the OTDR in averaging mode to clean up the trace.

vi. The above all activity will be done for each fiber of every OFC drum at site before blowing and the soft & hard copy of trace for all wavelength and data will be recorded as a separate file name for record and submission.

Blowing Process:

OFC shall be blown into the laid HDPE conduit with the help of compressor (with min. pressure of 8 Bar & max. pressure of 12 Bar) with the flow rate of minimum 10m^3/min and a blowing machine.

Optical fiber cable shall be equally distributed through the duct for 4 km stretch as shown below:-

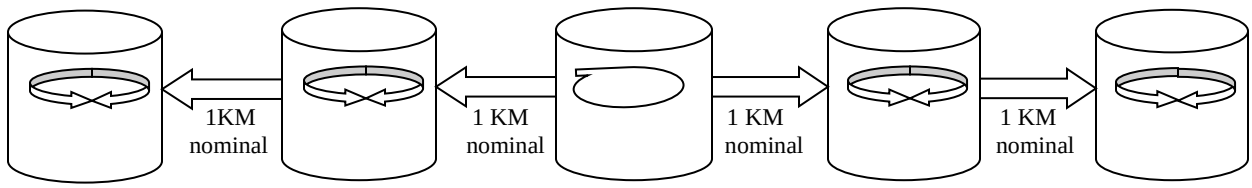

- Position the compressor and blowing machine at blowing pit BP2 after blowing pit BP1 and before blowing pit BP3 as shown in figure above.
- Uncoil ~2Km of cable in a figure of 8 configuration at BP2 location and blow towards blowing pit BP1. Cable received at blowing pit BP1 may be further kept in figure 8 configurations and blow beyond blowing pit BP1 till the jointing pit JP1 and coil 10m of OFC in blowing pit BP1 and 20m in jointing pit JP1.

- Now uncoil the remaining cable from the drum at blowing pit BP2 in form of figure 8 to have an access to the other end of the cable and Coil 10m of OFC in the blowing pit BP2.
- Now blow towards blowing pit BP3. Cable received at blowing pit BP3 may be further kept in figure 8 configuration and blow beyond blowing pit BP3 till the jointing pit JP2 and coil 10m of OFC in blowing pit BP3 and 20m in jointing Pit JP2.
- After blowing seal the HDPE duct end at each BP/JP location with the help of cable sealing plug and seal the duct end with the help of cable duct sealing compound (filo form) at each BP location.
- Since the cable will be available in length of 2/4 KM ± 2.5%, the cable length will vary accordingly. So, Plan the location of blowing pit in such a way to ensure that excess OFC is not coiled in the blowing pit and also OFC does not short fall to the location of blowing pit.
- At each jointing pit a coil of 20 mtrs should be kept in manhole from both sides of the pit (Total 40 mtrs). Spare loop of 10 mtrs OFC in blowing pit at each KM.
- Spare loop of approx. 200 mtrs of OFC in blowing pit installed at each DT/RT/IP station, 100 mtrs in blowing pit installed at each remote operated SV station, 15 mtrs at each station on wire mesh (as applicable) to be kept. However, the length of OFC stored in BP at each station shall be provided such that it is sufficient to take the OFC from blowing pit to the telecom control room and terminated at FTC.
- Across HDD crossing, OFC to be blown in both HDPE ducts for crossing length of more than 500 mtrs, for length less than 500 mtrs, OFC to be blown in only one duct.
- Physical check and all necessary precaution shall be taken from unloading the cable reels, storing them and transporting them to construction sites.
- If any damage is noticed that shall be brought to HPCL/Mecon notice and the same shall not be utilized without HPCL/Mecon consent in writing.
- Cable cutting shall not be done without approval of owner.
- Records to be maintained during cable blowing. Following records are required to be maintained and subsequently submitted to client
  a) OFC Drum testing.
  b) Manufacturer's packing details of cable drum.
  c) Physical length of cable on drum.
  d) Location of cable drum and intermediate coils left.
  e) Date of blowing/pulling cable drum.
  f) BP/JP and Permanent landmarks with GPS location.

6.3 OFC BLOWING/JOINTING PIT:

The cable blowing pit shall enclose HDPE section ends from both sides at every 1Km nominal distances or as per direction of Engineer-in-charge. The pit shall be circular (having internal diameter of 1200mm & wall thickness of 100mm) and made of reinforced concrete with lifting lungs cast into the lids during construction itself.

The pits shall be provided with suitable arrangement for the entry of one number of HDPE conduits (40/33 mm outer dia.) from both sides so that HDPE conduit should enter the pit at a height of 150mm above the bottom level of pit to prevent entry of mud, insects, etc. and the spare space between the duct and the wall of pit shall be filled with proper sealing compound (filo form).

The blowing pit shall be provided at every 1KM distance and at each station (DT/RT/IP/SV) locations. The pits shall be provided with suitable GI brackets to facilitate storage of 40m of the optical fiber cables (20m from each side) of the jointing pit and 10m in blowing pit.

The blowing/jointing pit will be completely filled with sand from bottom level to top of the pit to prevent entry of rodents after blowing and jointing of OFC, covering joint enclosure and HDPE conduit completely.

At all river crossing locations, blowing pit with proper OFC loop length at both the wide river bank end shall be provided. The jointing of OFC near river bank should be avoided. Drawing for blowing pit & jointing pit to be submitted for approval (as per tender) and the installation of BP/JP shall be as per the approved drawing. GPS location of each BP & JP to be taken and recorded in pit installation report.

6.4 SEALING OF HDPE CONDUIT AFTER BLOWING OF OFC:

HDPE duct end will be sealed with the help of cable sealing plug after blowing of OFC into the duct at jointing pit and blowing pit locations. HDPE duct end will be sealed with the help of cable duct sealing compound (filo form) after blowing OFC into the duct at blowing pit locations. Cable duct sealing compound should be non-toxic, vapour-free & should not crack and fail due to vibration in the duct due to temperature changes.

6.5 OFC JOINTING PROCEDURE:

- Before jointing/splicing of OFC ensure that at each jointing locations (normal joints at the end of each drum as well as other joints) atleast 20mtr cable from both end is available for testing & splicing in jointing pit.
- Now tool shall be checked. Take atleast 1mtr cable from both sides remove the HDPE sheet and leave 10cm of armour from both cables. Clamp it properly in joint closure box.
- Clean the fiber with the help of Hexane or Isopropanol and tissue paper to remove the moisture resistance jelly.
- Now start splicing with colorize.
- OFC splicing will be done in dust free atmosphere by skilled person using fully automatic splicing machine. After splicing and termination it shall be tested for each fiber as stated in previous section.
- Each splice loss shall be < 0.1 dB/Km at 1310nm.
- On completion of splicing, the fiber heat shrinkable sleeve which have been already placed before splicing to be shrieked to give the mechanical strength to the uncovered spliced fiber portion, by the end of splicing and sealing of joint closure OTDR traces for each fiber shall be taken in both direction at the prescribed wavelength of 1310nm & 1550nm.
- It shall be ensured that during splicing no fiber to be interchanged and hop continuity at all fiber for each hop is maintained.
- After completion of each joint at site, it shall be tested for water proof-ness by immersing it in water along-with OFC for 5 minutes.
- Route all fiber properly into the tray.
- During joining, electrical continuity of each of the metallic layer in the OFC shall be maintained.
- After splicing the fiber tray shield in joint box properly with provided tools.
- The OFC cable entry into the joint enclosure will be sealed with the help of heat shrinkable sleeve fiber
- OFC coil shall rest on floor of the pit after turns being secured with cable tie. Close the lid of the joint pit after filling with sand completely.
- No splicing shall be permitted on any fibre in a drum length of the cable.

6.6 TERMINAL AND REPEATERS:

Inside the boundary walls of the terminals and repeaters, the Optical Fiber Cable from each direction shall come to a common point & then shall be laid through HDPE conduit preferably along the wall of the station up to and inside the telecom room. The same shall be similar to Annexure Drawing but with cables/ conduit from both sides.

The HDPE pipe used for the leading-in of the Optical Fiber Cable into the telecom room shall be below the ground level without getting exposed outside (which shall be properly sealed after cable installation to avoid entry if rodents, insects, etc.). A 15m length of Optical Fiber Cable shall be kept in the telecom room to facilities termination.

6.7 TIE-IN LOCATION:

At all tie-in location the Optical Fiber Cable shall be laid in a separate trench 3 meter away from the pipeline to avoid any damage to the Optical Fiber Cable. It shall be as per annexure drawing.

The Optical Fiber Cable trench shall extend to 5 meter on both sides of the tie-in locations. The Optical Fiber Cable shall be suitable routed in the separate trench at all tie-in-locations considering minimum bending radius of the Optical Fiber Cable. At all these location, the cable shall be laid through HDPE conduits for protection.

7.0 TERMINATION OF OFC:

- The optical fiber cable is brought into the buildings through flexible HDPE conduits. The conduits shall be properly sealed at the installation of the cable.
- Optical fiber cable (~ 15 Meter) shall be secured on ‘Steel Mesh’ or ‘Wire Mess’ by the help of cable ties. This mess shall have suitable chemical coating/painted to prevent corrosion. In case of painting, the colour shall march the wall colour. Further the cable shall be terminated at Fiber Termination Closure (FTC).
- Wire Mesh shall be fabricated and grouted on the wall as per Mecon standard drawing no. MEC/05/E5/T/0016, procedure for cable laying to telecom room to be included.
- The FTC shall be wall-mounted type as suitable for the Optical Fiber Cable. The cable shall be specified to pigtails on trays provided in the FTC. The connector side for the pigtails shall be secured with suitable coupler/ through adapter provided as integral part of the FTC itself. The FTC shall have trays suitable splicing maximum of 6 Fibers per tray. The arrangement inside the FTC should be simple and in straight line.
- FTC should have entry points for a minimum of 2 No. of Optical Cable (armored/ non-armored) of diameter up to 20 mm with cable clamps to avoid entry of rodents/ dust in general. It should have a minimum of 2 Nos. of outlets for taking out 24 Nos. Pigtail. The outlets should have cable clamps.
- Grounding arrangements should be provided with the FTC for all the metallic layers of the cable. It should include minimum 2 nos. grounding shield bonds with nut & bolts for fixing to the armour of the OFC. 2 nos. of grounding cable of green colour with

suitable length and lugs clamped to its ends for connecting the armour of OFC with the grounding terminals of the FTC.

- The single mode fiber pigtails and connectors should meet the ITU-T recommendation as required as per the OFC specification.
- Optical Fiber Cable, connections & pigtails shall be fully compatible and matching to each other.
- The OFC cable shall be properly earthed at each telecom room for lighting protection as per the scheme.

8.0 TESTING PROCEDURE OF OFC:

The Optical Fibre cable will be tested for its continuity and average loss in dB/km. The link will be tested and recorded in the approved format.

8.1 FIBRE LENGTH MEASUREMENT

Test Description:

This test will check the continuity of the fibre from station to station and record the length of fibre. Average loss per kilometer of fibre length shown in dB/km shall be recorded for information only. Testing will be done from both ends and average will be calculated and taken as a result (for G.652D- 1310 nm and 1550 nm; for G655 fibre at 1550nm & 1625nm).

Test Equipment:

1. Optical Time Domain Reflectometer (OTDR)
2. Patch cords, pigtails

Procedure:

- Power on the OTDR and make the settings as required for the Hop under test.
- Splice a pigtail to one of the fibres
- Connect the OTDR with pigtail
- Make the laser ON and observe the trace till it gets settled up to the end of the trace.
- Store the results in the hard disk/floppy disk with proper identification of the fibre under test.
- Record the results in approved format
- Repeat the procedure for the Opposite direction.
- Repeat above steps for each fibre
- Perform the test at 1310nm & 1550 nm for G652D fibre and at 1550nm & 1625nm for G655 fibre.
- Average loss of each fibre should be less than the average loss estimated.

8.2 INSERTION LOSS MEASUEMENT

Test Description:

During the insertion loss measurement, light is launched (LASER) in the fibre by using a LASER source from one end at the other end by using an Optical Power meter the received is measured. Fibre loss is calculated by subtracting the receive power from the transmit power. This test also determines the fibre termination continuity on end to end basis as the measurement is done on both the ends of a link.

Tools and Equipment required

1. Power meter working on 1310nm, 1550nm & 1625nm
2. Laser source working on 1310nm, 1550nm & 1625nm
3. Patchcords (10 mtrs)

Procedure

- One power meter, one laser source and one unit of optical talk set are required at each station between which the link to be tested.
- At location A, switch ON the laser source, set it to operating wavelength of 1550 nm and connect it to the power meter (set at 1550 nm) by two FC/PC patch cords (these FC/PC patch cord will be connected to each other with FC/PC coupler) and record the laser power transmitted. Subtract 0.5dB (coupler loss) from this reading & record it in the test report as 'power transmitted'.
- Disconnect the power source and power meter by disconnecting FC/PC patch cords from the FC/PC connector. Do not disconnect patch cords from the power source and power meter.
- Connect the power source to one of the fibre terminated in FTC at Location A and the power meter to the same fibre under test in FTC at Location B.
- Record the power received in test format.
- To establish communication between two stations A & B, connect the Optical talk set to one of the fibre (for example fibre No. 12) at both the stations. When that particular fibre is next for testing connects the talk set to one on which testing is complete (for example fibre No.1).
- Confirm on the talk set that the power received is recorded.
- Perform the test at 1310nm & 1550 nm for G652D fibre and at 1550nm & 1625nm for G655 fibre.
- Connect the power source to next fibre terminated in FTC at Location A and Power Meter at Location B.
- Repeat the same procedure with source at Location B and Power Meter at Location A.
- Continue the above process till all fibres are tested
- Average loss of each fibre should be less than the average loss estimated.

9.0 CROSSINGS

9.1 OPEN CUT CROSSING (UNCASED CROSSING):

- For these crossing OFC cable shall be laid in the HDPE conduit.
- Length of HDPE duct shall be estimated with the help of survey documents & Alignment Sheet.

- For Road crossing, the HDPE conduit shall be extend for minimum 3 meters on each side of the road.
- For water crossings, HDPE conduit shall be used till ~5m of the normal underground trench depth, on each side of the crossing. The bank protection measure being provided for pipeline shall also be extended to take care of optical fibre cable.
- During the pulling operation continuous monitoring of pulling tension is necessary. The winch used shall have adjustable speed and recording device for pulling tension.
- HDPE should properly seal using heat shrinkable cap. The cap shall become tight with HDPE to seal the conduit properly.
- Proper care shall be taken while inserting the cable in duct to avoid damage.

9.2 CROSSING BY BORING (CASED CROSSING):

- The pipeline crossing executed by boring/jacking/HDD/Thrust Boring.
- In case of crossing to be done by with boring/jacking/HDD/Thrust Boring the OFC shall be laid in HDPE conduit shall be sub-ducted in a steel conduit.
- The ends of the each conduit shall be sealed immediately after installation of sub duct and re-sealed when the cable has been installed inside the conduit.
- At bends and leading-in-points, a flexible PVC/HDPE pipe may be used for protection and maintenance of the required bending radius of minimum 20 times outer diameter of the cable.

9.3 CROSSING BY HORIZONTAL DIRECTIONAL DRILLING (HDD):

For crossing to be done through HDD the HDPE conduit shall be sub-ducted in a CS conduit with double run of HDPE conduit. Across HDD crossing, OFC to be blown in both HDPE ducts for crossing length of more than 500 mtrs, for length less than 500 mtrs, OFC to be blown in only one duct.

9.4 UTILITY/ FOREIGN SERVICES:

In case the pipeline or any other utility/ service needs to be crossed, the HDPE shall be laid at least 0.5m below the pipe line/ utility/ service and the OFC shall be laid through HDPE Conduits for protection.

9.5 OPTICAL FIBER CABLE IN MARSHY AREA:

Optical fiber cable shall be laid in HDPE pipe in marshy area, water logged area or any other place where due to buoyancy the cable is likely to float. The conduit shall be tied with pipe to prevent its displacement from its laid position.

10.0 MARKERS

10.1 CABLE MARKER:

A 300mm diameter metal plate shall be made by the Contractor on the pipe line markers itself (at approx. every kilometre and at crossings). All joining locations and blowing locations shall be marked with proper identification markers.

Following shall be suitably painted on these metal plates by the Contractor:-

1) Optical fiber cable.
2) Cable progressive distance w.r.t. the repeater station. This repeater station shall be the one nearest to the progressive distance in the direction as specified by SIC.
3) Optical fiber cable length.

GPS location of each marker to be taken and recorded in marker installation report.

10.2 JOINT MARKERS:

All jointing locations shall be marked with proper identification markers. The Contractor shall supply fabricate and install the joint location markers. These markers shall be in line to the markers as given in Drawing/Sketch of MECON specification. The markers shall show the progressive joint no. and distance of the Joint as directed by site in-charge.

These markers shall be installed approximately 1m away from the jointing pit in the direction as per the instruction of SIC/ Owner.

The marker shall show

1) OFC joint
2) The progressive joint number w.r.t the nearest SV/IP stations.
3) Distance of the joint w.r.t the nearest joint location.
4) GPS location of each marker to be taken and recorded in marker installation report.

10.3 ELECTRONIC MARKER:

Contractor shall provide electronic locating system suitable for field use to locate underground-buried Optical fiber cable joints.

The system shall consist of:

a) Electronic marker (to be buried underground in each Blowing pit and Jointing pit).
b) Marker locator (including probe & locator electronics).
c) The electronic markers shall be placed at each OFC pit (both Blowing pit and Joint pit including planned and unplanned joint pit)

The electronic markers shall be lightweight and shall have a passive tuned resonant circuit, enclosed and sealed within a casing. The marker locator shall be able to locate the electronic markers from a distance of 2.2 m maximum with the help of audio and visual signals. The markers shall be of color suitable for Oil & Gas application.

Specification of Electronic Marker –

1. The electronic marker shall be disc type marker
2. The electronic marker shall not have any battery, moving part or chemicals.
3. The range of electronic Marker shall be 2.2 meters maximum for detection from Electronic Marker Locator
4. Electronic marker shall have operating temperature of -20 to +50 deg Celcius.
5. The housing shall be sealed leak tight
6. The frequency for operation of electronic marker shall be suitable for Intended Application (83 KHz)

The Electronic Marker Locator shall be of the same make as the Electronic Marker.
The marker locator and the probe shall be of lightweight and portable enough to be carried (in suitable carrying case, to be provided) on shoulder. The locator shall be able to work on batteries (dry alkaline) for continuously 8 hours.
The electronic locating system shall be able to work in saline atmosphere in coastal area and shall be protected against corrosion.
The electronic locating system shall not be affected by any metal, alternating current, etc.
The material used for the manufacture of electronic markers shall be protected against any damage due to rodents or any other insects in the underground environment.
Each marker locator provided shall be complete with its set of accessories (i.e. necessary interfaces, connecting cables, software, etc.)
The electronic markers shall be buried underground 100 mm below the lid of the jointing pits with the jointing closure and 100mm padding of sand to be provided over the marker before placing the lid. Marker shall not be in direct contact with any metallic body.

11.0 HEALTH, SAFETY & ENVIRONMENT

Health, Safety precautions must be taken into account and procedures must be followed when working with Optical Fiber Cable, associated material and test equipment.

When trimming or handling fibers, care should be taken to avoid splinters entering the skin. Once under the skin the splinters are difficult to see and difficult to remove. All loose fiber pieces should be correctly disposed of and workbenches and equipment must be kept clear and clean at all times.

The Optical ports transmit and receive, of all measuring equipment must be capped when the equipment is not in use as dirt and dust can affect the connector and it's mating test connector. All measurement equipment fitted with lasers emits low energy, which is invisible to the naked eye hence precautions must be taken.

12.0 DOCUMENTATION

Appendix-01	Inspection & Test Plan for OFC Laying
Appendix-02	Inspection & Test Plan for OFC Jointing & Testing

Appendix-03	Inspection Report for OFC Drum Testing
Appendix-04	Inspection Report for OFC Blowing
Appendix-05	Inspection Report for OFC Jointing & Splicing
Appendix-06	Inspection Report for Fibre Length Measurement
Appendix-07	Inspection Report for Insertion Loss Measurement
Appendix-08	Inspection Report for Blowing & Jointing Pit Installation
Appendix-09	Inspection Report for OFC Marker Installation

Note:

- *In case of any conflict between the requirements of this procedure and HPCL/Mecon Specification the later shall govern until and unless specific intension is meant.*
- *Standard Operating Procedure (SOP) shall be strictly followed.*

	PROJECT NAME	
	CLIENT:	
	CONSULTANT: MECON LIMITED	
	CONTRACTOR:	
	DOC.NO. : Rev.:00 Appendix: 01	

INSPECTION & TEST PLAN FOR OFC LAYING

Sr. No.	Activity Description	Verifying Record	Extend of Inspection	
			Contractor	MECON / Client
1	Availability of Approved Work Procedure	Approved Procedure	W	A
2	Availability of Approved OFC Alignment Sheet	Approved OFC Alignment Sheet	W	A
3	Review of Calibration Certificate of Instruments/Testing Equipments	Calibration Certificate	W	R
4	Review materials for work and test certificate from approved source		W	R
5	Clearance for OFC Blowing		W	W/RW
6	OFC Drum Testing		W	W/RW
7	OFC Blowing Works		W	W/RW
8	Inspection of Joint Pit & Sand Filling		W	W/RW
9	Installation of Cable marker,Joint Pit Marker,Electronic Marker		W	W/RW
10				
11				

Legends:- W : Witness P : Perform R : Review

RW : Randon Witness A : Approval

PREPARED BY Contractor	REVIEWED & APPROVED BY MECON/Client

	PROJECT NAME	
	CLIENT:	
	CONSULTANT: MECON LIMITED	
	CONTRACTOR:	
	DOC.NO. : Rev.:00 Appendix: 02	

INSPECTION & TEST PLAN FOR OFC JOINTING & TESTING

Sr. No.	Activity Description	Verifying Record	Extend of Inspection	
			Contractor	MECON / Client
	Drum Testing			
1	Physical Inspection		W	R/W
2	Measurement of Fibre Attenuation		W	R/W
	Splicing/Jointing			
3	Before Splicing (After Laying)		W	W/RW
4	Record Fibre Attenuation of both the Fibre being spliced		W	W
5	Measurement of Splice Loss,Fibre Loss,Connector Loss		W	W
6	Continuity check after splicing of OFC		W	R
	Link Testing			
7	Measurement of Link Loss from either side of OFC between two stations after jointing		W	W/RW
8	Review Test & Inspection Documents		W	R
9	FTC,OFC Splicing & Termination		W	W/RW
10	After Completion of Splicing between two Station Final Attenuation Test		W	W/RW

Legends:- W : Witness P : Perform R : Review

RW : Randon Witness A : Approval

PREPARED BY Contractor	REVIEWED & APPROVED BY MECON/Client

	PROJECT NAME
	CLIENT:
	CONSULTANT: MECON LIMITED
	CONTRACTOR:
	DOC NO. : REV.: 00

INSPECTION REPORT OF OFC DRUM TESTING

Appendix: 03	**Section/Spread:**		**Report No. :**
Cable Drum No. :	**Cable Drum Length :**		**Date:**
OTDR Model & Make Detail :			
Testing Wavelength : 1310nm / 1550 nm / 1625nm (Strikeout whichever is not applicab			

Fiber No.	Fiber Identification		Fibre Length (Mtr)	Average Loss in dB/Km			Remarks
	Bundle / Tube	Fiber Color		1550	1625		
1							
2							
3							
4							
5							
6							
7							
8							
9							
10							
11							
12							

NOTE: Testing will be done from both ends for each fi and average will be calculated and taken as a result for G655 fibre at 1550nm & 1625nm).

FOR SAMPLE

FOR CONTRACTOR	FOR MECON/CLIENT
Sign	**Sign**
Name	**Name**
Date	**Date**

	PROJECT NAME	
	CLIENT:	
	CONSULTANT: MECON LIMITED	
	CONTRACTOR:	
	DOC NO.: REV: 00	

INSPECTION REPORT OF OFC BLOWING

Appendix: 04 **Report No.:**

Section/Spread: **Date:**

Sr. No.	OFC Drum No.	OFC Drum Length	Sequential Meter Mark on the OFC (Mtr)		Pipeline Chainage/Joint Ref		Length (Mtr)	Joint/Blowing Pit Cable Reading	Loop at Joint/Blowing Pit	Blowing Pit/Jointing Pit No. & Location with Landmark	Remarks
			FROM	TO	FROM	TO					

FOR SAMPLE

PROGRESS	PREVIOUS	TODAY	CUMMULATIVE

REMARKS:

FOR Contractor	FOR MECON/CLIENT
Sign	**Sign**
Name	**Name**
Date	**Date**

	PROJECT NAME	
	CLIENT:	
	CONSULTANT: MECON LIMITED	
	CONTRACTOR:	
	DOC NO.: REV.: 00	

INSPECTION REPORT OF OFC JOINTING & SPLICING

Joint Pit No. :	**Report No.:**
Chainage :	**Date:**
Splicing Equipment Detail:-	**Appendix: 05**
Make:	**Section/Spread:**
Model:	**Drum No. (+ve Direction):**
Serial No.:	**Drum No. (-ve Direction):**

Fiber No.	Fiber Identification		Positive Direction		Negative Direction		Splice Loss	Remarks
	Bundle / Tube	Fiber Color	Fibre Length	Loss dB/Km	Fibre Length	Loss dB/Km		
1								
2								
3								
4								
5								
6								
7								
8								
9								
10								
11								
12								

FOR SAMPLE

Note : Positive Direction is in the Direction of Liquid Flow

NOTE: Testing will be done from both ends for each fibre and average will be calculated and taken as a result (for G655 fibre at 1550nm & 1625nm).

FOR Contractor	FOR MECON/CLIENT
Sign	**Sign**
Name	**Name**
Date	**Date**

	PROJECT Name
	CLIENT:
	CONSULTANT: MECON LIMITED
	CONTRACTOR:
	DOC NO.: Rev.: 00

INSPECTION REPORT FOR FIBRE LENGTH MEASUREMENT

Location A:
Location B:
Testing Wavelength : 1550 nm & 1625nm
OTDR Details:-
Make/Model:
Serial No.:

Report No.:
Date:
Appendix: 06
Section/Spread:
Joint Pit No.:

Fiber No.	Fiber Identification		Fibre Length (Mtr)	Loss in dB/Km		Average Loss =(L1+L2)/2	Remarks
	Bundle / Tube	Fiber Color		(+ve) Direction L1	(-ve) Direction L2		
1							
2							
3							
4							
5							
6							
7							
8							
9							
10							
11							
12							

FOR SAMPLE

(ALL LOSSES MEASURED IN dB/Km)

NOTE: Testing will be done from both ends for each fibre and average will be calculated and taken as a result (for G655 fibre at 1550nm & 1625nm).

FOR Contractor	FOR MECON/CLIENT
Sign	**Sign**
Name	**Name**
Date	**Date**

	PROJECT Name
	CLIENT:
	CONSULTANT: MECON LIMITED
	CONTRACTOR:
	DOC NO.: Rev.: 00

INSPECTION REPORT FOR INSERTION LOSS MEASUREMENT

Location A:	**Report No.:**
Location B:	**Date:**
Testing Wavelength : 1550 nm & 1625nm	**Appendix: 07**
OTDR Details:-	**Section/Spread:**
Make/Model:	**Joint Pit No.:**
Serial No.:	

Cable Length from Appendix-06 (L) : _____ Km

Number of Splices (including Pigtails-N): _____

Number of Connectors (C) : _____

Average IL (1625 nm) : 0.24L + 0.1N + 0.5C : _____ (Estimated)

Average IL (1550 nm) : 0.22L + 0.1N + 0.5C : _____ (Estimated)

Fiber No.	Fiber Identification		A - B			B - A			Average	Remarks
	Bundle / Tube	Fiber Color	Power Transmitted at A	Power Received at B	IL1(A-B)	Power Transmitted at B	Power Received at A	IL2(B-A)	IL = (IL1 + IL2)/2	
1										
2										
3										
4										
5										
6										
7										
8										
9										
10										
11										
12										

***(ALL LOSSES MEASURED IN dB/Km)**

NOTE: Testing will be done from both ends for each fiber and average will be calculated and taken as a result (for G655 fibre at 1550nm & 1625nm).

Subtract 0.5 dB (Connector Loss) in Power Transmitted at origin.

FOR SAMPLE

FOR Contractor	FOR MECON/CLIENT
Sign	**Sign**
Name	**Name**
Date	**Date**

	PROJECT Name
	CLIENT:
	CONSULTANT: MECON LIMITED
	CONTRACTOR:
	DOC NO.: Rev.: 00

INSPECTION REPORT FOR PIT INSTALLATION

Appendix: 08	Report No.:
Section/Spread:	Date:

Sr. No.	Chainage/Location	Blowing Pit/ Jointing Pit No.	GPS Coordinates	Filling with Sand	Remarks
1					
2					
3					
4					
5					
6					
7					
8					
9					
10					
11					
12					
13					
14					
15					
16					
17					
18					
19					
20					

FOR SAMPLE

Note:- Blowing/Jointing Pit to be filled completely with sand.

FOR Contractor	FOR MECON/CLIENT
Sign	Sign
Name	Name
Date	Date

	PROJECT Name
	CLIENT:
	CONSULTANT: MECON LIMITED
	CONTRACTOR:
	DOC NO.: Rev.: 00

INSPECTION REPORT FOR MARKER INSTALLATION

Appendix: 09	**Report No.:**
Section/Spread:	**Date:**

Sr. No.	Chainage/Location	Cable Marker	Joint Marker	Electronic Marker	GPS Coordinates	Remarks
1						
2						
3						
4						
5						
6						
7						
8						
9						
10						
11						
12						
13						
14						
15						
16						
17						
18						
19						
20						

FOR SAMPLE

FOR Contractor	FOR MECON/CLIENT
Sign	**Sign**
Name	**Name**
Date	**Date**

ELECTRICAL & INSTRUMENTATION SECTION

TECHNICAL SPECIFICATION

PERMANENTLY LUBRICATED TELECOM HDPE DUCT & ACCESSORIES
TS No. : MEC / TS / 05 / E5 / T / 037

Prepared & Issued By

MECON LIMITED
DELHI

Revision	Date	Description	Prepared by	Checked by	Approved by
1	11.11.2006	Modified as reqd.			
0	11.07.2005	First Issue	Vikas Jain	Rakesh Shukla	Pankaj Shrivastava

Contents

Sl. No.	Description
1.0	Scope
2.0	Reference Documents
3.0	PLB HDPE Duct Specification
4.0	PLB HDPE Duct Accessories
5.0	Inspection & Testing
6.0	Identification Marking
7.0	Type Approval and Acceptance Test
8.0	Storage at Manufacturing Works
9.0	Quality Assurance Plan and Testing
10.0	Vendor Data Requirement and Documentation
11.0	Packaging and Delivery
12.0	Enclosures:

1. Table – I : Scale of Sampling for visual and dimensional requirements.
2. Table – 2 : Sampling for Acceptance tests
3. Annexure – I : Oxidation Induction Test
4. Annexure – II : Internal Co-efficient of Friction

1.0 **SCOPE**

This specification covers the minimum generic requirement of permanently self-lubricated high Density Polyethylene ducts (PLB HDPE ducts) for use as underground conduits for optical fibre cables and associated accessories, suitable for installation of OFC by blowing technique.

The scope of work shall include supply of PLB HDPE ducts and the accessories as per the specification/ requirements given in this document.

However Optical Fibre Cable shall be laid in a permanently lubricated HDPE pipe using blowing technique.

1.1 Supply of special tools and tackles as mentioned in the bills of quantity.

1.2 Supply of complete technical literature and documentation as defined in Section 10.

1.3 Quality Assurance and testing as described at section 9, to the complete satisfactory of the Owner/ Consultant and/or third appointed agency.

2.0 **REFERENCE DOCUMENTS**

Unless otherwise specified, this document requires references to the latest standards of the following:

IS 2530	Methods for test for Polyethylene Molding Materials and Polyethylene Compounds
IS 4984	High Density Polyethylene Pipes for water supply
IS 7328	High Density Polyethylene materials for molding and extrusion
IS 9938	Recommended colours for PVC insulation for LF wires and cables
IS 12235 (Part – 9)	Methods of test for unplasticized PVC pipes for potable water supplies – Impact strength at 0°C
IS 14151 (Part – 1)	Ployethylene pipes for sprinkler irrigation systems (Part – I Pipes)
ASTMD 1693	Test method for environmental stress cracking of ethylene plastics.

3.0 **PLB HDPE Duct Specification :**

3.1 The PLB HDPE duct shall consist of two concentric layers, the outer layer being HDPE, co-extruded with an inner layer of solid permanent lubricant, to reduce the internal co-efficient of Friction (ICF). The lubricant shall be of a solid layer of uniform thickness so formulated to provide a permanent, low friction boundary layer between the inner surface

of the duct and Optical Fiber cable. The lubricant layer shall be clearly visible in cross-section, concentric with the outer layer.

3.2 Alternatively the duct can be of a homogenous construction (without a separate inner layer) meting all the requirements of this specification.

3.3 The PLB HDPE duct shall be supplied in a continuous length in coil form, suitable for shipping and handing purposes.

3.4 **MATERIAL**

3.4.1 **Two Layer Construction**

3.4.2 Outer Layer

The base HDPE rein used for the outer layer of the PLB HDPE duct shall conform to any designation of IS – 7328 or to any equivalent standard meeting the following requirements, when tested as per IS – 2530. However, the manufacturers shall furnish the designation for the HDPE resin as permanently IS – 7328 as applicable.

a) Density : 0.940 TO 0.958 g/cc AT 27°C

B) Melt Flow Rate (MFR) : 0.2 to 1.1 g/10 minutes at 190°C & 5 kg load.

3.4.3 Inner Layer

The inner lubrication material shall be of friction reducing, polymeric material which shall be integral with HDPE layer. The lubricant materials shall have no toxic or dermatic hazards for safe handling. In the finished PLB HDPE duct, the co-extruded layer of solid permanent lubricant shall be integral part with HDPE and shall be white in colour and clearly visible in cross-section of duct.

3.4.4 The inner layer of solid permanent lubricant shall be continuous all through and shall not come out during storage, usage and throughout the life of the duct.

3.5 **Homogenous Construction:**

The HDPE material used for this construction shall meet the requirements listed in clause 4.1.1, such that the finished duct shall satisfy the internal Co-efficient of friction (ICF) and all other requirements of this specification.

3.6 The raw material (s) used for the duct shall meet the following requirements :

i) The anti-oxidants used shall be physiologically harmless.

ii) None of the additives shall be used separately or together in quantities as to impair long term physical and chemical properties of the duct.

iii) Single pass rework material of the same composition produced from the manufacturer's own production shall be used and it shall not exceed 10% in any case.

iv) The raw material used for extrusion shall be dried the moisture content to less than 0.1%.

v) Suitable UV stabilizers shall be used for manufacturer of the duct to protect against ultra violet degradation, when stored in open for a minimum period of 8 months.

vi) The raw material used in the manufacturer of the duct shall be such that the service life of the duct and all its accessories can be expected to be more than 50 years including the life of permanent lubricant.

4.0 PLB HDPE DUCT ACCESSORIES

4.1 The following accessories are required for jointing the ducts and shall be supplied along with the ducts. The manufacturers shall provide complete design details, procedure for method of installation and type/ grade of the material used for the accessories. The qty. will be as per material requisition (MR).

a) ***Plastic Coupler***

It is used to couple two ducts. The design of this shall be simple, easy to install and shall provide airtight and water tight joint between the two ducts. The coupler shall ensure that the two ducts are butted smoothly without any step formation in the inner surface. The jointing shall meet the air pressure test of 10 kg/cm^2 for a minimum period of 2 hours without any leakage.

b) ***End Plug.***

This is for sealing the ends of the empty ducts, prior to installation of the Optical Fiber Cable and shall be fitted immediately after laying of the duct, to prevent the entry of any dirt, water, moisture, insects/ rodents etc.

c) ***Cable Sealing Plug***

This is used to seal the ends of the ducts perfectly, after the cable is installed in the duct, to prevent the entry of dirt, water, moisture, insects/ rodents etc. This is required at all places where cable has come out of the duct either for jointing or entry into the building as required. The sealing plug shall be capable of accommodating standard sizes of optical fibre cable taking into account the variation in diameter due to tolerance limits, etc.

d) ***End Cap***

This cap is made of hard rubber, shall be fitted into both ends of duct coil after manufacturing the duct. This shall avoid entry of duct, mud and rainwater into the duct during the transit and storage.

Note: The Accessories in clause 6.1 (b) and (c) shall be tested for air tightness with a pressure of 1 bar for 30 minutes. For carrying out the tests for the above accessories suitable length of duct shall be taken.

4.2 The following additional tools are required for jointing for the ducts and installation for optical fibre cable. These items can be procured as per the Manufacturer/ Supplier's specification, as and when required by the Owner.(This is required if exclusively mention in the Material Requisition).

a) ***Duct Cutter***

This is required to cut the duct ends squarely without any burr or notch.

b) ***C-Spanner***

This is required to tighten Plastic Coupler properly so as to ensure air/water tightness as specified above.

c) ***Blowing Equipment***

The equipment used for installing optical fibre cable by blowing technology shall be capable of pushing 1 km (minimum) cable into the duct with powerful air stream generated by a compressor. The compressor shall have the following characteristics:

Pressure	:	Min 8 bar Max. 12 bar
Flow rate	:	10 m^3/ minute

The mechanical feeder of the equipment shall not cause any damage to the sheath/ jacket of the optical fibre cable.

5.0 **INSPECTION AND TESTS:**

The manufacturer shall perform all inspection and test as per the requirements of this specification and the relevant codes, prior to shipment at this works. Such inspection and test shall be, but not limited to the following:

5.1 **Visual Inspection**

The ducts shall be checked visually for ensuring good workmanship that the ducts shall be free from blisters, shirks hole, flaking, chips, scratches, roughness, break and other defects. the ducts shall be smooth, clean, round. The ends shall be cleanly cut and shall be square with axis of the duct.

5.2 The colour of the duct shall be green and uniform throughout. Each duct shall contain 4 approximately equi-spaced continuous longitudinal stripes of width 3-mm minimum in white colour. These stripes shall be co-extruded during manufacturing. The material of the stripes shall be same as that of base compound for the duct.

5.2.1 In the case of two layer construction the inner layer (Soil Lubricant) shall be white in colour.

5.2.2 The colours of the duct, stripe and inner layer (in the case of two layer construction) shall be identifiable under normal lighting conditions and generally conform to IS-9938.

5.3 **Dimension of Ducts**

The nominal size of the ducts shall be 40/33 mm & 32/26 mm and shall meet the following requirements.

		40 mm/ 33 mm	**32 mm/ 26 mm**
a)	Outside diameter	40 mm + 0.4 mm	32 mm + 0.3 mm
b)	Wall thickness	3.5 mm ± 0.2 mm	3.0 mm ± 0.2 mm
c)	Standard length	1000 ± 100 mtr.	1000 ± 100 mtr.
d)	Maximum Outer Diameter of Optical Fiber Cable (OFC) that can be Installed by air blowing Technique	16 mm	12 mm

Note: Selection of duct size will depend on the outside diameter of the Optical Fiber Cable (OFC) to be installed.

5.4.1 Tensile Strength and Elongation

The samples removed from the PLB HDPE ducts when tested as permanently IS-14151 (Part – I) shall meet the following requirements.

Tensile Strength : Min 20 N/mm^2

Elongation : Min. 350%

5.4.2 Reversion Test:

The test shall be carried out as per IS-4984. For this purpose, a duct length of 200 mm shall be placed horizontally in an air-oven or a suitable liquid bath on a support at 110 ± 2°C for 60 minutes so that the dimensional change in duct section are not impeded. After cooling to room temperature the dimensional change of the duct section shall be measured in the longitudinal direction and the deviation from the initial length shall be calculated and stated in percentage. The dimensions shall not changes by more than 3% in the longitudinal direction.

5.4.3 Environmental Stress Crack Resistance Test:

The specimen cut from the PLB HDPE ducts shall meet the environmental stress cracking as described in ASTM D-1693, when tested with 10% Igepal (CO 630) solution at 50 ±1°C for 96 hours. There shall be no failure.

5.4.4 Impact Strength Test:

The test has to be carried as per IS-12235 (Part – 9). A sample duct 150 mm in length shall be placed on heavy rigid block whose faces are at an angle of 120°. A striker with a hemispherical nose of 13 mm radius and loaded to a total weight of 10 kg shall be allowed to fall freely in a suitable vertical guides through a height of 1.5 m before striking the duct. The line of fall of the striker shall coincide with the diameter of the duct. The duct shall not crack or split.

5.4.5 Crush Resistance Test :

Samples of duct of 150 mm ± 2 mm in length shall be subjected to a dead load of not less than 50 kg for one minute and shall be allowed to recover for 5 minutes. The deflection with load on and after recovery period shall not exceed 10% and 2% respectively.

5.4.6 Mandrel Test:

A 150 mm long mandrel of diameter, 3 mm less than the internal diameter of the duct shall be passed through a 5 meter length of duct, freely throughout the length, when the duct is bent to a radius of 5 meters.

5.4.7 Ovality Test:

Ovality is the difference between maximum outside diameter and the minimum outside diameter at the same cross-section of the duct, at 300 mm away from the end. The ovality for 40/33 mm and 32/26 mm ducts, when measured as per IS_4984 shall not exceed 1.4 mm and 1.3 mm respectively.

5.4.8 Coil Set Test :

The PLB HDPE duct shall unroll of the drums without snaking or waving having zero coil set. Thus the duct shall lay straight into the trench without re-coiling. For this purpose, when a minimum length of 50 meters duct taken from the coil and laid on the ground, it shall be straight without any bends or kinks and without deformation, except 5 meters from each end.

5.4.9 Oxidation Induction Test:

The induction time in oxygen when tested with a copper pan as per method in Annexure – I, shall not be less than 30 minutes.

5.4.10 Hydraulic Characteristics :

The duct shall be tested for internal pressure creep rupture test as per IS-4984. For this purpose, a sample length of 10 times the outside diameter of the duct shall be taken. At the end of the test, the sample shall not shown signs of localised swelling or leakage and shall not burst during the test duration. The test showing failure within a distance equivalent to the length of end cap from the end shall be disregarded and the test repeated. The test temperature and the duration of the test shall be as follows:

Test	Test Temp °C	Test Duration (Hrs.) (Min, holding time)	Induced Stress (Mpa)
Type Test	80	165	3.5
Acceptance test	80	48	3.8

5.4.11 Internal Co-efficient of Friction:

The internal Co-efficient of Friction when tested as permanently method in Annxurer – II, shall not exceed 0.06, when tested with respect to Nylon jacketted unarmored Optical Fiber Cable i.e., 24 F Fiber or 12 F as required.

5.4.12 Optical Fiber Cable Blowing Test:

For this test an Optical fiber Cable of a diameter nearest to the diameter indicated in this specification, relevant to the size of duct under test shall be installed by blowing of the cable in a length of 1 km of the duct. The duct shall be laid with bends in the horizontal

and vertical planes and a raise in the middle. The 1 km section shall include two couplings at suitable locations.

The OFC shall then be blown out. It shall be inspected for any visual damage. The OFC shall then be blown in again.

It shall be possible to blow in the Optical Fiber Cable through the 1 km duct, each time in not more then 30 minutes. There shall be no visible damage to OFC.

The test will be conducted on two samples out of the five submitted for Type Approval.

5.4.13 Owner/ Consultant reserves the right to perform stage – wise inspection and witness tests as indicated above at manufacturer's works prior to shipment. Manufacturer shall give reasonable access and facilities required for inspection to the Owner / Consultant Inspector.

Owner/ Consultant reserved- the right to require additional testing at any time to confirm or further investigation a suspected fault. The cost incurred shall be to manufacturer's account. In no case shall any action Owner/ Consultant or his Inspector relive the manufacturer of his responsibility for material, design, quality etc. Inspection and test performed / withered by the Owner/ Consultant Inspector shall in no way relieve the manufacturer's obligation to perform the required inspection and test.

5.4.14 Test Certificate

Manufacturer shall submit all the test report of the test performed as per above requirement.

The certificates shall be valid only when signed by Owner/ Consultant Inspector. Only the certificate material shall be dispatched from manufacturer works.

6.0 IDENTIFICATION MARKINGS

The duct shall be prominently marked with indelible link, with the following information at intervals every meter to enable identification of the pipe. The size of ink markings shall be distinct, clearly and easily visible.

- Client Name
- Client Logo
- Manufacturer's Name (Also can be abbreviated form)
- Name of the duct with size
- Machine number/ specific serial number of the duct
- Date of manufacturing
- Sequential length marking at every meter.

7.0 **TYPE APPROVAL AND ACCEPTANCE TEST :**

7.1 All the tests mentioned in this document shall be carried out on the 5 standard lengths of ducts and the samples must pass these tests before according the type approval. The supplier shall furnish 5 standard length for carrying out these tests for according type approval. Bulk manufacturer and supply shall start only after issue of type approval. The type approval certificate shall clearly indicated the type/ grade/ source of high-density polyethylene raw material, the size of the duct and the construction of the duct i.e., Two layer of Homogenous.

7.2 Fresh type approval shall be obtained whenever grade/ source of raw material HDPE resin or Solid Lubricant is changed.

7.3 **Acceptance Tests**

7.3.1 The acceptance tests shall be carried out on samples from the lot as per Table – 1 for Dimensional and Visual requirements. The requirements for Tensile Strength & Elongation, Reversion Test, Environmental Stress Crack resistance, Impact Strength, Crush resistance, Oxidation Induction Test, Hydraulic Characteristics and internal Co-efficient of Friction shall be carried out as per Table – 2.

7.3.2 The Owner at his discretion at any point of time can modify the acceptance tests and the sampling plan.

8.0 **STORAGE**

All the material shall be stores in the manufacturer's premises in such a manner that it will not affect the performance of the product.

9.0 **QUALITY ASSURANCE PROGRAM & TESTING**

9.1 **Quality Assurance Program**

a) Vendor shall submit the details for Quality Assurance Program followed by him beginning with raw materials, fabricated components, assemblies, etc., to finished product (AS Applicable). Vendor shall obtain and forward the Quality Assurance Program for equipment supplied by Sub-contractor.

b) The Owner/ Consultant and/ or third appointed agency reserves the right to inspect and test duct and accessories etc. at all stages of production and testing. The inspection and testing shall include but not be limited to materials, sub-assemblies, prototypes, produced units, guaranteed, performance specifications etc.

c) For factory inspection and testing, vendor shall arrange all the is required e.g., quality assurance personnel spaces, test gear etc., for successful carrying out of

the job by the Owner's respectively at vendor's cost at the vendor's/ Manufacturer 's works.

d) Owner's representatives shall have free entry and access to any and all parts of the Vendor's facilities associated with manufacturing and testing of the system at any given time.

e) It shall be explicitly understood that under no circumstances shall any approval of the Owner or his representatives relieve the vendor of his responsibility of material, design, quantity assurance and the guaranteed performance of the system and its constants.

f) Vendor shall invite the Owner/ Consultant, at least 30 days in advance, of the date on which material shall be ready for inspection and testing. All relevant documents and manuals approved engineering drawings, etc shall be provided to the Owner's / consultant's representative's well in advance of the start of inspection and Testing.

g) Owner/ Consultant shall, after completion of inspection and testing to their satisfactory, issues factory acceptance certificate to release duct / accessories for shipment. No. Duct / accessories shall be shipped under any circumstances unless a factory acceptance certificate has been issued for it, unless agreed otherwise by Owner/ Consultant.

h) **PLB HDPE Duct Testing**

Factory testing shall be conducted for acceptance of the duct at the manufacturing facility, wherefrom duct is offered for this project before final acceptance, as per the approval test plan

i) **Accessories Testing :**

Accessories shall be tested before final acceptance, as per the approved test plan.

j) **Test Instruments :**

i) Vendor shall arrange all test equipment's/ instruments, manpower, test-gear, accessories etc. necessary for testing.

ii) All technical personnel assigned by vendor shall be fully conversant with the system specifications and requirements. They shall have the specific capability to make the system operative quickly and efficiently and shall not interface or be interfered by other concurrent construction and commissioning activities in progress. They shall also have the capability to incorporate any minor modification/ suggestions put forward by Owner/ Consultant.

iii) Power supply required for testing shall be arranged by the vendor

iv) *Test Plane*

Vendor shall submit to owner and consultant 'Test Plans' well in advance of commencement of actual testing.

The plans shall include:

- Functional and performance description (in short) and tests to be conducted and purpose of test.
- Test procedures (including time schedule for the tests) and identification of test inputs details and desired test results.

v) *Test report*

The observation and test results obtained during various tests conducted shall be complied and documented to produce test reports by vendor. The test reports shall be given for each equipment / items and system as a whole. The report contain the following information to a minimum/

vi) *Test Results*

- Comparison of tests results with anticipated test result as given in test plans and reasons for deviations if any,
- The data furnished shall prove convincingly that:
- The system meets the Guaranteed performance objective.
- Mechanical/ Optical/ Electrical limits were not exceeded.
- Failure profiles during the tests are well within the specified limits.

10.0 VENDOR DATA REQUIREMENTS AND DOCUMENTATION

10.1 All the documents shall be is English language only.

10.2 Six sets of documents shall be supplied with final submission.

10.3 With the initial bid, the following documents shall be submitted

i) Duct Construction Details and Duct Life.
ii) Accessories Details.
iii) Technical Literature etc.

10.4 Following documents shall be supplied to Owner/ Consultant in order to start Factory Acceptance Testing

a) For Review Approval

i) Detailed Testing procedure for Duct.
ii) Detailed test procedure for accessories
iii) Quality assurance program
iv) Any other data/ documents not specifically mentioned but required for the satisfactory completion of the work

b) For Information

i) Detail technical Literature and manuals for duct & accessories
ii) Installation, Maintenance & Operation Instruction Manual for all the supply items

11.0 PACKAGE AND DELIVERY

The store shall be supplied in coils of suitable size for delivery in such a manner that they arrive at their distribution in a safe and undamaged condition and will permit the loading, unloading and handing the stores using standard moving equipment. The minimum inner bending diameter of technical coiled duct shall be 25 times the outer diameter of the cut. The material used for packaging wrapping sealing, moisture, resistant, corrosion prevents etc. as per applicable shall be of recognized brands and shall conform to best standards for packaging. The packing shall protect the material from impact vibration rough handling rain, dust, damp, insects, rodents etc., Each packing should have packing slip and test dispatch clearance documents.

_____

Table – 1

SCALE OF SAMPLING FOR VISUAL AND DIMENSIONAL, REQUIREMENTS

No. of coils (Duct) in the Lot	Sample No.	Sample Size	Cumulative Sample Size	Acceptance No.	Rejection No.
(1)	(2)	(3)	(4)	(5)	(6)
Up to 150	First	13	13	0	2
	Second	13	26	1	2
151 to 280	First	20	20	0	3
	Second	20	40	3	4
281 to 500	First	32	32	1	4
	Second	32	64	4	5
501 to 1200	First	50	50	2	5
	Second	50	100	6	7
1201 to 3200	First	80	80	3	7
	Second	80	160	8	9
3201 to 10000	First	125	125	5	9
	Second	125	250	12	13
10001 to 35000	First	200	200	7	11
	Second	200	400	18	19

Criteria:

The number of ducts given for the first sample in Column 3 shall be examined for dimension and visual requirements. A duct failing to satisfy any of these requirements shall be considered as defective. The lot shall be deemed to have satisfied these requirements, if the number of defectives found in the first sample are less than or equal to the corresponding acceptance number given in Column 5. The lot shall be deemed not to have met these requirements of the number of defectives found in the first sample is greater than or equal to the corresponding rejection number given in Column 6. If, however, the number of defectives found in the first sample, lies between the corresponding acceptance and rejection numbers given in Column 5 and 6, the second sample of the size given in Column 3 shall be taken and examined for these requirements. The lot shall be considered to have satisfied these requirements, if the number of defectives found in the cumulative sample is less than or equal to the corresponding acceptance number given in Column 5 otherwise not.

TABLE – 2

SAMPLING FOR ACCEPTANCE TESTS

A separate sample size for each of the tests shall be taken as stipulated at random from the samples already examined for dimensions and visual inspection. All the ducts in each of the sample size shall be tested for compliance for the requirements for as per clause no. 5.4 of technical specification:

(a) Tensile Strength & Elongation
(b) Reversion Test
(c) Environmental Stress Crack Resistance
(d) Impact Strength
(e) Crush Resistance
(f) Oxidation Induction Test
(g) Hydraulic Characteristics
(h) Internal Co-efficient of Friction

The lot shall be considered to have met the requirements of these tests, if none of samples tested fails.

No. of Coils	Sample Size
Up to 150	3
151 to 1200	5
1201 to 35000	8

Annexure – I

OXIDATION INDUCTION TEST FOR PLB HDPE DUCT

1.0 A short length of completed duct (approximately 30 cm) shall be sealed at the ends and placed in an oven at temperature of 68 ± 1°C for 8 hours. The sample shall then be allowed to cool at room temperature for at least 16 hours. The sample shall be clean and dry. The sample shall then by tested by means of a Differential Scanning Calorimeter (DSC) or by Differential Thermal Analyser (DTA).

2.0 **INSTRUMENT TEST PROCEDURE :**

2.1 **Cell cleaning**: The cell shall be held at approximately 400 °C for 10 minutes in Nitrogen. The cell shall be cleaned after standing over night and between testing of different formulations.

2.2 **Temperature Calibration**: This has to be done according to the instrument manual. The temperature scale should be adjusted until the determined melting point of pure Indium metal is 156.6 °C at a heat rate of 5 °C per minute or any other heat rate as indicated in the manual of the equipment is permitted.

2.3 **Copper Pan Preparation**: Prepare fresh oxide coatings by holding the pan in the flame of Fisher burner until it begins to glow (about 3 seconds). Remove the pan from the flame and immediately cool in a gentle stream of air. A fresh pan shall be used for each test, and the copper shall be of electrolyte grade.

2.4 **Sample Preparation**: Take the sample weighing about 5 mg from the duct conditioned as indicated above. Position the sample in the center of the copper pan. Cover with clean 316 stainless steel screen (40 mesh) and crimp the pan.

2.5 **Nitrogen Purge**: Place the sample pan and reference pan in instrument cell. Flush for 5 minutes with cylinder of nitrogen (99.6% extra dry grade) at 60 ± 10 cc per minute.

2.6 **Oxidation Test**: Rapidly increase the temperature of the sample (20 °C /min or greater) from 100 °C or lower initial temperature to 199 ± 1°C. After thermal equilibrium is obtained (steady recorder signal) switch to 80 ± 20 cc per minute oxygen flow and simultaneously start time-base recording. The oxygen used for the test should be equivalent to or better than 99.9% extra dry grade.

2.7 **Induction Period**: The oxygen induction point shall be recorded as time zero, and the chart speed shall be sufficient to provide a clearly discernible slope at the start of the exothermic reaction. The test in the pure dry oxygen atmosphere shall continue until the exothermic peak is produced. The intersection of the tangent of the exothermic sloped line with the extended base line will be drawn. The time form time zero to this intersection point is read from the base line and recorded as the oxidative induction time.

Anenxure – 2

INTERNAL CO-EFFICIENT OF FRICTION TEST FOR PLB HDPE DUCT

1. **SCOPE:**

These procedure details the method employed to determine internal friction properties of the duct.

2. **APPARATUS :**

Extensometer machine, circular test fixture of diameter 750 mm (capable of having secured to it), 25 kg weight, optical fibre cable and pulley wheel.

3. **METHOD:**

a) A suitable length of the duct, per-conditioned at 23 $\pm$ 2°C for 2 hours, shall be secured to the text fixture such that the sample completes a 450°C wrap. With one end extending vertically 200 mm towards the floor.

b) A suitable length of optical fibre cable shall be inserted into the sample.

c) The extensometer and the test fixture shall be aligned and secured from movement.

d) The 25 kg tail weight shall be attached to the optical fibre cable extending from the 200 mm vertical extension of the sample such that there is a minimum free travel of 150 mm for the weight.

e) The other end of the optical fibre cable shall be attached via a pulley, to the extensometer such that the planes of travel are in no direction diagonal and there shall be slack remaining in the optical fibre cable.

f) The extensometer shall be operated, and the maximum load applied, in lifting the 25 kg weight to a minimum travel of 150 mm shall be noted.

g) Extensometer conditions
Load : kg or Newtons
Speed : 500 mm / minute
Mode : Tension

4. The co-efficient of friction shall be calculated by the following equation:

Internal Co-efficient of Friction (ICF) = $\log_e (T1/T2) / Q$

Where, T1 = Pulling force in kg;

T2 = 25 kg

Q = Angle of the subtending are between T1 & T2 in radians (i.e. 450 ° = 7.85398 radians)

****

TECHNICAL SPECIFICATION FOR

OPTICAL FIBRE CABLE
&
ASSOCIATED ITEMS

Technical Specification No. :
MEC / TS / 05 / E5 / T / 096

Prepared & Issued By

MECON LIMITED
DELHI

Revision	Date	Descriptions	Prepared by	Checked by	Approved by
4	16.08.2017	Revised spec. & reissued	RG	VJ	PS
3	18.06.2015	Revised spec. & reissued	RG	VJ	PS
2	24.02.2011	Revised spec. & reissued	VJ	RS	PS
1	16.03.2007	Revised spec. & reissued	VJ	RS	PS
0	28.03.2006	First issue	Harsha	Vikas Jain	Pankaj Shrivastava

INDEX

1.0 INTRODUCTION

2.0 DATA TO BE FURNISH BY THE BIDDER

3.0 SCOPE OF WORK

4.0 DESIGN OBJECTIVES AND GUIDELINES

4.1 Standards applicable

4.2 Approval of documents

4.3 General Guidelines

5.0 SUB SYSTEM SPECIFICATIONS

5.1 Optical fibre cable

5.2 Jointing Closures with accessories (Refer MR)

6.0 GENERAL SPECIFICATIONS

6.1 Vendor data requirements & documentation

6.2 Packing

6.3 Quality Assurance Programme & Testing

Annexure '1' : Suggestive Cable Construction for 24 count CSTA Optical Fibre Cable

Annexure '2' : Suggestive List of Special Tools and Tackles for OFC (refer MR)

Annexure '3' : DATA TO BE FURNISH BY THE BIDDER ALONG WITH BID

1.0 **INTRODUCTION** :

1.1. The purpose of this specification is to define the outline requirement of an Optical Fiber (OFC) System for the Telecommunication requirements which is most suitable for cross country pipeline project.

It is proposed to procure 24 fibre OFC, corrugated steel tape armored cable designated for Blowing through Telecom Duct and direct burial application to meet the telecommunications requirements. The OFC shall be blown into the self-lubricated HDPE Duct directly using "Blowing Techniques". The cable manufacturing shall be such that it should be suitable for the blowing in Telecom Duct.

1.2. In case of any conflict between the specifications, enclosed suggested construction drawing, data sheets, related codes and standards etc, vendor shall refer the matter in writing to the purchaser, and shall obtain clarification in writing before starting the manufacturing/constructing OFC.

1.3. Vendor shall be responsible for selection of best materials to meet the purchaser's specifications. In case of any modification / change in materials supplier / QA & QC requirement later date to meet the Purchaser's Specifications, the same shall be done by the vendor without any price and delivery implications.

2.0 DATA TO BE FURNISHED BY THE BIDDER:

(Bidder shall furnished this information at the time of their offer otherwise their offer may be rejected / disqualified for OFC work) Enclosed as Annexure – 3.

3.0 SCOPE OF WORK

3.1.1 As part of scope, it is desired to supply necessary OFC and associated items (refer Material Requisitions), as a total responsibility for Design, Engineering, Manufacturing, Testing and Supply Supply including transportation to the designated stores, loading & unloading complete in all respect as per the specifications provided in the Bid documents.

The Scope of work shall include supply of optical fibre cable, Joint closure and Tools as per the specification / requirement given in this document (refer Material Requisitions, to be supplied as per the scope of MR)

The fibre for the cable can be procured from any reputed fibre manufacturer and the inspection of the offered fibre shall be carried out at the premises of fibre manufacturer or cable manufacturer by the bidder and inspection by owners at Owner's prerogative.

Compliance with the requirements of this specification does not relieve the Supplier of the OFC of proper design, meeting all the specified rated operating and service conditions.

The fibre for the cable can be procured from any reputed Optical Fibre manufacturers but preferably from one of the followings:

1. Lucent
2. Fujikura
3. Corning
4. Alcatel
5. Sumitomo
6. Furukawa
7. Sterlite

Optical fibre shall meet all the technical specification mentioned in the tender documents. Owner / MECON reserve the right to check the technical properties of the fibre prior to fabrication/ manufacturing of cables. Supplier has to offer the fibre for inspection either in the premises of fibre manufactures/ cable manufactures or wherever testing facility exists. Bidder has to witness the same, however, Owner / MECON reserves the rights to get the optical fibre tested for its technical parameters from any recognized independent test houses in India and abroad.

3.1.1.1 Design, Engineering, Manufacture, Testing and supply of Corrugated steel tape armoured (CSTA) or Electrolytically Chrome Plated Low Carbon Steel Armoured (ECCSA) optical fibre cables as follows:

Multi-grade cable of 24 fibre counts, out of this 6 fibre counts are ITU-T G.655 and 18 fibre counts are ITU-T G.652 D specification embedded in one cable suitable for direct underground burial application or Blowing. However OFC also shall be laid in a permanently lubricated HDPE Telecom duct using blowing techniques.

3.1.1.2 Manufacture/Procurement, Testing and supply of suitable Joint closures including all necessary accessories of any of the following make:

i) 3M
ii) Siemens
iii) TE Connectivity India Pvt Ltd
iv) Any other make from the approved vendor list of client with supporting paper

(To be supplied if requested in Material Requisition / Price Schedule)

3.1.1.3 Supply of Special Tools and Tackles as mentioned in the Bill of quantity. The Tools & Tackles to be supply for the joints closures should be from the same manufacturing as that of the joint closures.

(To be supplied if requested in Material Requisition / Price Schedule)

3.1.1.4 Supply of complete technical literature and documentation as defined in Clause 6.1.

3.1.1.5 Quality Assurance and Testing as described at Clause 6.4 to the complete satisfaction of the Owner/MECON &/or third appointed agency.

4.0 DESIGN OBJECTIVE AND GUIDELINES

4.1 STANDARDS APPLICABLE

The OF cable/materials provided shall conform to the latest editions of standards like ITU-T, TIA, IEC, EIA, ASTM & BS.

International Electro-technical Commission (IEC)

IEC 60092-3	Electrical Installations in Ships & semi; Part 3: Cables [Construction, Testing and Installations] Second Edition & semi; Amendment 1-1969 & semi; Amendment 2-1971 & semi; Amendment 3-1973 & semi; Amendment 4-1974 & semi; Amendment 5-1979 & semi; Amendment 6-1984
IEC 60502	Extruded Solid Dielectric Insulated Power Cables for Rated Voltages from 1 kV up to 30 kV First Edition

International Organization for Standardization (ISO)

ISO 9001 Quality Systems - Model for Quality Assurance in Design/Development, Production, Installation and Servicing

ISO 9003 Quality Systems - Model for Quality Assurance in Final Inspection &Test

ISO 9004 Quality Management and Quality System Elements – Guidelines

Electronic Industries Association (EIA)

EIA TIA-455 Standard Test Procedure for Fibre Optic Fibres, Cables, Transducers, Sensors, Connecting and Terminating Devices, and Other Fibre Optic Components

EIA TIA-492AAA-A Detail Specification for 62.5-Micrometer Core Diameter/125-Micrometer Cladding Diameter Class Ia Graded-Index Multimode Optical Fibres

EIA TIA 492AAA Detail Specification for Class IV a Dispersion-Unshifted Single-Mode Optical Fibres

International Telecommunications Union

ITU-T G650 Definition and test methods for the relevant parameters of single mode fibres – Series G

ITU-T G651 Characteristics of a 50/125 micrometer multimode graded index optical fibre cable – Series G

ITU-T G652 Characteristics of a single mode non-dispersion – shifted optical fibre cable – Series G

ITU-T-G655 Characteristics of a single mode non-zero dispersion – shifted optical fibre cable – Series G

Telecordia GR-20 - Core specifications.

The optical fibre cable / materials provided shall conform to the latest editions of standards like ITU-T, TIA, IEC, EIA, ASTM & BS

In case of any conflict between the above standards and the specifications, the matter shall be referred to OWNER/MECON.

Vendor shall proceed with design of the cable/equipment only after obtaining clarifications from OWNER/MECON in all such cases.

4.2 APPROVAL OF DOCUMENTS

The vendor shall be completely responsible for the successful completion of the job. However, to ensure a good quality of workmanship, as also of the offered system, vendor shall prepare and submit the documents (as per clause 6.1 of section 6) to be approved by the OWNER / MECON.

Vendor shall proceed with the manufacture / procurement / installation of the respective materials and/or equipments only after obtaining the necessary approval from the Owner/MECON.

4.3 GENERAL GUIDELINES

a) Vendor shall be totally responsible for quality of offered Optical Fibre, cable/materials/equipments till the life as define in the tender.

b) OWNER/MECON reserves the right to modify/revise/alter the specifications of cable/equipments prior to acceptance of any offer.

c) If during the course of execution of the work any discrepancy or inconsistency, error or omission in any of the provisions of the contract is discovered, the same shall be referred to the owner/ MECON who shall give his decision in the matter and issue instruction directing the manner in which the work is to be carried out. The decision of the OWNER/MECON shall be final and conclusive and the contractor shall carry out the work in accordance therewith.

d) The model numbers of jointing closure offered for this project must have been in successful field use for more than one year.

e) It shall be strictly as per OWNER prerogative and decision of OWNER in the matter being final, not more than 5 % of total quantity ordered may be accepted by OWNER in shorter length than specified 4 KM $\pm$ 2.5% at a discounted price by applying a discount to the ex-works price indicated in price schedule as follows: (Refer MR for the drum size & quantity)

Drum Length 3000 Mtrs to 3899 Mtrs : 25% discount

Drum Length 2000 Mtrs to 2999 Mtrs : 50% discount

f) It shall be strictly as per OWNER prerogative and decision of OWNER in the matter being final, not more than 5 % of total quantity (of specified drum) ordered may be accepted by OWNER in shorter length than specified 2 KM $\pm$ 2.5% at a discounted price by applying a discount to the ex-works price indicated in price schedule as follows: (Refer MR for the drum size & quantity)

Drum Length 1000 Mtrs to 1899 Mtrs : 25% discount

Drum Length less than 1000 Mtrs : Not acceptable

5.0 SUB SYSTEM SPECIFICATIONS

5.1 OPTICAL FIBRE CABLE

GENERAL

The vendor shall be totally responsible for the desired performance of the offered Optical fibre, cable including Design, Engineering, Manufacture and Testing and Supply including transportation to the designated stores, loading & unloading complete in all respect. The cable shall be suitable for storage in open storage yard in any season / weather condition.

The cables should be made with central core tube design.

Multi grade mono-mode cable with 24 fibre counts, out of this 6 fibre counts are as per ITU-T G 655 and 18 fibre counts are as per ITU- T G652 D specifications.

The types of optical fibre cable required are as follows.

CSTA or ECCSA, direct underground burial type Optical Fibre Cable suitable has to be laid by blowing techniques.

Corrugated steel tape armoured or Electrolytically Chrome Plated Low carbon Steel Armoured cable shall be of direct burial type / suitable for blowing and shall be laid at an approximate depth of 1.6 meters from the ground level directly or through HDPE Telecom duct and shall be required to cross various roads, railways, canals, small rivers, marshy areas etc. through appropriate casings, directly/ or inside duct as per site conditions. The cable shall be laid in a permanently lubricated HDPE pipe using blowing techniques.

The intent of the following specifications is to establish the minimum requirements and guidelines for the Optical fibre cable to be supplied for this project.

5.1.1. CABLE CONSTRUCTION SPECIFICATIONS FOR 24 FIBRE

5.1.1.1. General

a) Desired operation life of finished cable **Better than 35 years**
(Suitable for storage in open yard in all weather conditions)

b) Length of CSTA or ECCSA direct underground 4 Km ± 2.5 % or 2 Km ± 2.5 %
Burial type O.F. Cable per drum **(Refer MR for size of Drum)**

c)1 Cable weight in single drum **Bidder to provide**

c)1.1 ***(no splicing shall be permitted on any fibre in a drum length of the cable)***

d) Protection required

The cable shall be protected against damages from termite, rodent, fire, chemicals (such as oil & natural gas, LPG and other petroleum products), moisture and water over the lifetime of the cable.

g) Cable identification

i) The outer surface of the cable shall be permanently & legibly marked with colour in contrast to the outer sheath at regular intervals not exceeding one meter with *Name of Owner/Logo of the Owner, Name of manufacturer, structure of cable and 'OPTICAL FIBRE CABLE'*. All the marking over OFC shall be by Hot Foil Indentation and such that it should not be erased during field use.

ii) The outer surface of each completed cable shall have sequentially numbered metric length markers spaced at regular intervals of one meter.

h) Construction details of cable

i) Strength member FRP (minimum 2 mm dia)

ii) Filling of core The tubes shall be filled up with moisture resistant jelly which should be compatible with the coated fibre and the surroundings. The Jelly shall also be flooded over the stranded tubes to ensure blocking of water

transmission. The jelly over the cable core shall be contained by a polyester tape rapped over the cable core. Dry core construction is also accepted subjected to suitability from water penetration.

iii) Number of fibres per tube 6 (Six) fibre per tube. For color of fibre Refer cross section dwg

iii) Colour of tubes — 4 different distinct color.
No of tubes — 4 (Four) tubes ***brown for G 655***
Filler tubes — 02/03 (or as required) Refer cross section dwg

iv) Moisture barrier — Water swellable yarn /Tape (dry binder threads impregnated with super absorbent- polymer SAP shall be applied helically over the central strength member with a minimum pitch of 25 mm. Further Water blocking tape of 0.15 mm minimum thickness applied longitudinally over the loose tube. The tape shall form a close fit around the cable core with a sealed overlap of 10 % or 6 mm minimum.

v) a) Core covering — Non-metallic strength member comprising of aramid yarn shall be applied helically over the core.

b) Rip Cord — 2 numbers below the MDPE sheath and 2 numbers below Corrugated steel tape.

vi) Inner sheath — **MDPE (with UV Stabilized, Anti Rodent, Anti-Termite additives)**

Thickness of inner sheath — 1.50 mm minimum

vii) Armouring (Direct Underground Burial Type) — CSTA Tape or Electrolytically chrome plated low carbon steel tape both side coated with ethylene acrylic copolymer applied longitudinally with minimum overlap of 10% or 6 mm.

Thickness of steel tape — 0.15 mm minimum

Thickness of each polymer layer — 0.04 mm minimum

viii) Outer sheath — **HDPE (with UV Stabilized, Anti Rodent, Anti-Termite additives)**

Thickness of outer sheath — 1.5 mm minimum

ix) Electrical continuity of the respective metallic layers shall be maintained between the ends of the cable in each cable drum.

X) Overall cable outer diameter shall not exceed 16 mm, bidder to specify

5.1.1.2 Mechanical Characteristics of cable

a) Temperature

Installation & operation (-) 20 Deg. C to (+) 70 Deg. C

Storage (-) 05 Deg. C to 70 Deg. C

b) Tensile strength

For CSTA, Direct underground burial Type OFC — The cable shall have sufficient strength to withstand a load of value T= 9.81W Newton, Where W = weight of 1Km of cable in Kg.

The load shall not produce total strain exceeding 0.25% in the fibre.

c) Cable weight in Kg/Km — Bidder to specify

d) Minimum bending radius — 20*Cable diameter

5.1.1.3 Average splice loss < 0.1db

5.1.1.4 Maximum overall diameter of the cable 16 mm (vendor to confirm)

5.1.1.5 Cross sectional diagram of the cable is attached for reference as **Annexure - 1**. The cable should be confirmed as per this cross sectional drawing. Bidder should submit the proposed / offered cross section diagram of the cable with the bid giving full details. It should confirm to general practice followed internationally. Approval has to be taken before construction of OFC.

TECHNICAL SPECIFICATIONS OF FIBRES TYPE I (* nos fibre – G652D)

Single Mode Optical Fibre, Fully ITU T rec. G652 D Oct 2000, IEC60793-1 & Telecordia GR 20 Core Compliant

Sr. no	Parameter	Requirement	
1.0	**Transmission characteristics**		
1.1	Attenuation coefficient At 1310nm At 1550nm At 1625nm	In bare fibre ≤0.35dB/Km ≤0.20dB/Km ≤0.23dB/Km	In cable ≤0.37dB/Km ≤0.22dB/Km
1.2	Mode field diameter at 1310nm Nominal Tolerance	Any single value 8.6 – 9.5µm ± 0.7µm	
1.3	Cut-off wavelength on 2 mt sample of fibre	≤1320	
1.4	Chromatic dispersion 1285-1330nm 1270-1340 nm Zero dispersion wavelength Zero dispersion slope	 ≤3.5ps/nm-Km ≤5.3ps/nm. Km 1300 –1324nm ≤0.093ps/sqnm. Km	
2.0	**Dimensional Specification**		
2.1	Geometrical parameter • Primary coating diameter • Cladding Diameter • Clad non-circularity • Mode field concentricity error	 245 ± 10µ m 125 ± 1µ m ≤ 1% ≤ 0.8µ m	

3.0	Mechanical Performance	
3.1	Fibre Curl	4m
3.2	Fibre Proof test	1%

MATERIAL PROPERTIES OF THE FIBRE:

a) Protective materials/coatings

Optical fibres shall be coated with UV cured double Acrylate Resin. It should not have any reaction with cladding or core material. The coatings should provide maximum. Resistance to micro bending & abrasion and ensure mechanical & optical strength. The coatings shall be easily stripped with mechanical tools.

b) Fibre Identification

The coatings shall be in various distinct colours in order to facilitate fibre identification. Fibres colours shall correspond to IEC publication 793-2 and 304. The colours shall correspond reasonably with standard colours and shall readily be identifiable and shall be durable. The colours used should have fast colours properties and should not fade during the lifetime of cable. The coating and the colour shall not react with surrounding jelly. The vender shall take prior approval from HPCL for the colour scheme for fibre identification before commencement of manufacture of OFC.

TECHNICAL SPECIFICATIONS OF FIBRES TYPE II

Single Mode Optical Fibre Type-I Fully ITU-T G-655 October'2000, IEC60793-2 and Telecordia GR – 20 Cores Compliant

Sr. no	Parameter	Requirement	
1. Transmission characteristics			
1.1	Attenuation coefficient At 1550nm At 1625nm	In bare fibre ≤0.22dB/Km ≤0.24dB/Km	In cable ≤0.24dB/Km ≤0.26dB/Km
1.2	Mode field diameter Nominal Tolerance	Any Single value between 8-11μ m ± 0.7μm	
1.3	Cut-off wavelength on 2 mt sample of fibre	≤1480	
1.4	Chromatic dispersion 1530-1565nm 1565-1625 nm Zero Dispersion wavelength Zero dispersion slope	 0.1- 6 ps/nm-Km 4 – 11.2 ps/nm. Km ≤ 1530nm ≤0.093ps/sqnm. Km	
1.5	Polarized Mode dispersion IN Cable, maximum individual fibre	≤ 0.15ps/√Km	
1.6	Attenuation with bending 100 turns on a mandrel of 60mm diameter 1 turn on mandrel of 32mm diameter	≤ 0.05dB at 1550nm ≤ 0.5dB at 1550nm ≤ 0.6dB at 1625nm	

3.0	**Dimensional Specification**	
2.1	Geometrical parameter 1. Primary coating diameter 2. Cladding Diameter 3. Clad non-circularity 4. Mode field concentricity error 5. Effective area	 245±10μ m 125 ± 1μ m ≤ 1% ≤ 0.8μ m ≥ 50squm.
4.0	**Mechanical Performance**	
3.1	Fibre Curl	4m
3.2	Fibre Proof test	1%

MATERIAL PROPERTIES OF THE FIBRE:

a) Protective materials/coatings

Optical fibres shall be coated with UV cured double Acrylate Resin. It should not have any reaction with cladding or core material.

The coatings should provide max resistance to micro bending & abrasion and ensure mechanical & optical strength. The coatings shall be easily stripped with mechanical tools.

b) Fibre Identification

The coatings shall be in various distinct colours in order to facilitate fibre identification. Fibres colours shall correspond to IEC publication 793-2 and 304. The colours shall correspond reasonably with standard colours and shall readily be identifiable and shall be durable. The colours used should have fast colours properties and should not fade during the lifetime of cable. The coating and the colour shall not react with surrounding jelly. The vender shall take prior approval for the colour scheme for fibre identification before commencement of manufacture of OFC.

5.1.3 OPTICAL FIBRE CABLE TESTS

The following minimum tests shall be conducted at the factory for the acceptance of the cable (Tests under item No. 5.1.3.1 shall be conducted by the Bidder on his own and test results send to the Owner/MECON for approval/review. Tests under item No. 5.1.3.2 shall be conducted by the Bidder in the presence of Approved Third Party Inspection Agency and Owner/MECON, after receiving test results under item no. 1)(In addition the Bidder shall provide Supplier's test certificate for the various types of raw materials used in manufacturing of this optical fibre cable) during inspection.

LEGEND

AT : All to be tested (100 %)

ST : Sample test (5%) OR Minimum one drum of specified length

5.1.3.1	Tests for fibre:	Testing	Test Reference
a)	Core (mode field) diameter and concentricity error	AT	ITU-T, G 652 & G.655

	b)	Cut-off wavelength	AT	ITU-T, G 652 & G.655
	c)	Attenuation coefficient		
	c1)	at 1300nm	AT	ITU-T, G 652 & G.655
	c2)	at 1550nm	AT	ITU-T, G 652 & G.655
	C3)	Spectral attenuation G.655	AT	ITU-T
	d)	Chromatic dispersion		
	d1)	at 1300 nm	AT	ITU-T, G 652 & G.655
	d2)	at 1550nm	AT	ITU-T, G 652 & G.655
	d3)	From 1530 to 1565nm G.655	AT	ITU-T G.655
	e)	Cladding		
	ei)	Diameter	AT	ITU-T, G 652 & G.655
	eii)	Non circularity	AT	ITU-T, G 652 & G.655
	f)	Water immersion	ST	IEC– 60793 – 53
5.1.3.2	Tests on completed cables:			
5.1.3.2.1	Visual inspection:			
	a)	Cable lay-up and fibre identification	ST	
	b1)	Identification and length marking on outer jacket.	ST	
	b2)	Colour contrast of the marking with the outer sheath of the cables	ST	
	c)	Overall diameter of the cable	ST	
5.1.3.2.2	Tests for moisture barrier:			
	a)	Thickness of layers	ST	
	b)	Extent of overlapping	ST	
	c)	Water immersion	ST	
5.1.3.2.3	Tests for corrugated steel tape armouring:			
	a)	Thickness of layers	ST	
	b)	Extent of overlapping	ST	

c)	Electrical continuity of metallic layers	AT	
b)	Electrical discontinuity between CSTA and moisture barrier	AT	

5.1.3.2.4 Other tests:

a)	Attenuation at 1310 nm & 1550nm	AT	ITU-T, G. 652 & G.655
	Polarization Mode dispersion	ST	ITU-T
b)	Tensile performance	ST	IEC-794-1-E1

b1) CST-ECCSA, direct underground burial type O.F. Cable
(with a tensile load of value T= 9.81 W Newton, where W = weight of 1 km `Cable' in kg).

c) Crush — ST — IEC-794-1-E3
(with 200 kg of load to be slowly placed and held for 60 seconds. The change in attenuation should not exceed 0.1dB/km)

d) Impact — ST — IEC-794-1-E4
(with a mass of 5 kg allowed to fall freely from 500 mm height on the cable sample 10 times repeatedly with a gap between one impact to another approximately at 60 seconds. The change in attenuation should not exceed 0.05dB/km)

e) Torsion — ST — IEC-794-1-E7
(with a weight of 7.5 kg attached to the stationery chuck and shall be subjected to 10 cycles. The change in attenuation should not exceed 0.05dB/km)

f) Bend — ST — IEC-794-1-E11
(To be performed preferably with Procedure 1 (of IEC) with a mandrel diameter of 24D mm, where D is the diameter of the cable and testing shall be done with 4 turns of cable wrapped and then unwrapped for 10 complete cycles. The change in attenuation should not exceed 0.05dB/km at 1310nm & 1550nm.

g) i) Load test : a load of 100 N. No damage to the fibre, sheath or to the other cable elements.
ii) Kink — ST — IEC-794-1-E10
Radius: 10*Cable diameter. No kink shall occur.

h) Temperature cycling — ST — IEC-794-1-F1
(Temperature cycle shall be taken as☺

i)	at room temperature	:	1 hr.
ii)	at zero degrees	:	12 hrs.
iii)	at 65 degrees	:	12hrs
iv)	from 65 degrees to room temperature	:	1 hr

(The change in attenuation should not exceed 0.1dB/km)

i) Water penetration test — ST — IEC-794-1-F5
Water head: 1 M. Test period 24 hrs No leakage from test length cable

j) Sheath integrity (Spark test) — ST — IEC-794-1-F3
The sheath shall withstand a spar test voltage of at least 8KVr.m.s. or 12 KV d.c.

k) ESCR at 50 deg C for 48 hrs — ST — IEC-794-1
(Sample of outer sheath - No crack observe)

NOTES :

In case optical fibre cables, tested and inspected in accordance with this specification, fail to pass the test or non comply with the specification requirement, the tests shall be repeated on a further representative set of cable pieces, and if it again fails, the whole lot shall be rejected subject to the discretion of the Owner/MECON.

All RAW material test reports and test reports of fibre shall be made available at the time of inspection for review.

Bidder shall provide detailed test procedures for each of the above-mentioned tests DURING DETAILED ENGINEERING.

All the necessary test instruments shall be made available with valid calibration from the certified statutory laboratory / NABL accredited lab only. All the internal test certificate and material test reports shall be forwarded along with inspection call.

5.2 **JOINTING CLOSURES (applicable if part of supply as per MR)**

Jointing closures shall be suitable for the cables, as mentioned under clause 5.1. Jointing closures should be Dust tight (No dust ingress) and Protected against immersion in water (Suitable for continuous immersion in saline water) and should be complete with all accessories including splice cassettes splice protection and all other accessories including accessories for electrical continuity of metallic layers of optical fibre cable. The jointing closures shall be provided with suitable jointing pit support hardware to secure the jointing closures to a ~1200 mm dia. circular jointing pit.

Jointing Closure Tests

The following tests shall be conducted as a minimum:

a) Water Ingress Test

The cable-jointing box shall be assembled along with a continuous piece of cable passing through. The jointing box shall then be secured at the bottom of a immersion tank containing water upto a height of 2.0 m at normal room temperature for a period of 24 hours. The joint box will then be opened as per the specified procedure and visually examined for any ingress of water. It shall be declared to have passed the test in case there is no water present inside the box.

b) Impact test

The cable joint box shall be kept on a metal platform. A weight of 5 kgs spherical type having radius of R 50mm at striking end will be made to strike the box at the middle after having been released from a height of 500mm for 10 times. The joint box will be declared to have passed the test in case there are no cracks or fracture inside or outside of the box.

c) Drop and topple test

A drop test platform consisting of a steel plate not less than 6.5mm thick has to be used. The steel plate is bolted to a fully set concrete block at least 460mm thick. The joint box shall then be allowed to topple and fall freely from a height of 2000mm. The joint box will be declared to have passed the test in case there is no visible damage to the enclosure.

d) Pulling test

The joint box should be assembled with a long length of cable so that it can be pulled to the required tension of 200 kgs to check the strength of fixing arrangement inside the joint box.

e) Static load test

The assembled cable joint closure shall be kept on a platform with dimension more than that of cable joint closure. A curved hollow profiled mandrel shall be used for application of load and the mandrel shall be at the middle straight part of the joint closure. Weights shall be gradually placed on the mandrel till the weight becomes 200 kgs. The joint box shall be kept under the weight for a period of 24 hours. The joint closure shall be declared to have passed the test in case there is no visible damage.

Bidder shall provide detailed test procedures for testing Jointing Closures, and may improve upon the same.

6.0 GENERAL SPECIFICATIONS

6.1 VENDOR DATA REQUIREMENT AND DOCUMENTATION

a) One set of Hard copy till the approval of Document and after approval two sets of hard copy and 6 sets of soft copy in CDs.

b) All documents shall be in English language only.

c) During system definition /engineering stage, owner/MECON shall review/approve drawings/documents to be mutually agreed with the vendor.

6.1.1 With the initial bid, the following documents shall be submitted:

1) Clause wise compliance of Technical specification and acceptance all terms & condition.
2) Cable construction-showing cross section of the offered Optical fibre cable, providing details of each layer (Specifically mentioning, material used thickness etc.).
3) Cable lifetime calculations.
4) Jointing Closure details. (If applicable)

6.1.2 The following documents for the complete system shall be supplied to Owner/MECON in order to start Factory Acceptance Testing:

a) Following documents shall be supplied for review and approval.

1) Detailed testing procedure for Optical fibre cable, Internal testing reports, RAW materials and testing reports.

2) Detailed testing procedure for Joint closures & Test Instruments.(if applicable)

3) Quality Assurance program (OFC, JC & test instruments etc separately)

4) Any other data, document not specifically mentioned, but required for satisfactory completion, operation and maintenance of the system shall be provided.

b) Following documents shall be supplied for information only.

1) Detail Technical manual of Joint closures and each type of instruments/equipment containing circuit diagrams and description.

2) Maintenance manual of each type of instrument/equipment.

6.2 PACKING

All equipments/instruments/cable drums shall be individually packed in suitable containers/crates designed to avoid damage to the equipments during transit and storage in accordance with best commercial practice and with the requirements of applicable specifications. The materials used for packaging, wrapping. Sealing, moisture resistant barriers, corrosion preventers, etc. shall be of recognized brands and shall conform to best standards in the areas in which the articles are packaged. *The packing shall protect the equipment from impact, vibration, rough handling, rain, dust, damp, insects, rodents, etc. Each container/crate shall be subjected to impact, vibration and other mechanical tests and all drum shall be suitable for storage in any type of weather condition in open field.*

Each container shall have a copy of factory acceptance test report enclosed in it.

Packages for optical fibre cable shall make provision to allow for two (2) meters of excess cable on the inner end of the package to be accessed from outside. The outer end of the cable shall have pulling eye with heat shrinkable sleeves attached to it. The inner end of the cable shall be provided with a heat shrinkable sleeve. The ends shall be adequately protected to allow for normal handling during shipment.

6.3 QUALITY ASSURANCE PROGRAMME & TESTING

QUALITY ASSURANCE PROGRAMME

a) Vendor shall submit the details of Quality Assurance Programme followed by him beginning with raw materials, fabricated components, assemblies, etc. to finished product (AS APPLICABLE). Vendor shall obtain and forward the Quality Assurance Programme for equipment supplied by Sub-contractor, if any.

b) The owner, MECON and/or third appointed agency reserves the right to inspect and test cable, jointing closures, etc at all stages of production and testing. The inspection and testing shall include but not be limited to materials, sub-assemblies, prototypes, produced units, guaranteed performance specifications, etc.

c) For Factory inspection and testing, Vendor shall arrange all that is required e.g., quality assurance personnel, space, test gear etc. for successful carrying out of the job by the Owner's representatives at Vendor's cost at the Vendor's/Manufacturer's works.

d) Owner's representatives shall have free entry and access to any and all parts of the Vendor's facilities associated with manufacturing and testing of the system at any given time.

e) *It shall be explicitly understood that under no circumstances shall any approval of the Owner or his representatives relieve the Vendor of his responsibility for material, design, quality assurance and the guaranteed performance of the system and its constituents.*

f) Vendor shall invite the Owner/MECON, at least 15 days in advance, of the date on which system shall be ready for Inspection and Testing. All relevant documents and manuals; approved engineering drawings, etc. shall be provided to the Owner's representatives well in advance of the start of Inspection and Testing. In case of third part inspection shall be arrange along with inspection of client/MECON.

f) Owner/MECON shall, after completion of inspection and testing to their satisfaction, issue factory acceptance certificates to release the cable/jointing closures for shipment. No cable/jointing closures shall be shipped under any circumstances unless a factory acceptance certificate has been issued for it, unless agreed otherwise by Owner/MECON.

6.3.1 TESTING

a1) Optical Fibre Cable

Factory testing shall be conducted for acceptance of the cable at the manufacturing facility, wherefrom cable is offered for this project before final acceptance, as per the approved test plan.

a2) Jointing closures

Jointing closures shall be tested before final acceptance, as per the approved test plan.

a3) Test Instruments

All test instruments shall be provided with calibration certificates. Test instruments shall be tested for functional operations, as per the approved test plan.

b) Vendor shall arrange all test equipments/instruments, manpower, test-gear, accessories, etc., necessary for testing.

c) All technical personnel assigned by Vendor shall be fully conversant with the system specifications and requirements. They shall have the specific capability to make the system operative quickly and efficiently and shall not interfere or be interfered by other concurrent construction and commissioning activities in progress. They shall also have the capability to incorporate any minor modifications/suggestions put forward by MECON/Owner.

d) Power supply required for testing shall be arranged by the Vendor.

e) Test Plan

Vendor shall submit to Owner and MECON `Test Plans' well in advance of commencement of actual testing.

The plans shall include:

ei) Functional and performance description (in short) and Tests to be conducted and purpose of test.

eii) Test procedures (including time schedule for the tests) and identification of test inputs details and desired test results.

f) Test Report

The observations and test results obtained during various tests conducted shall be compiled and documented to produce Test Reports by Vendor. The Test Reports shall be given for each equipment/item and system as a whole. The report shall contain the following information to a minimum:

fi) Test results.

fii) Comparison of test results with anticipated test result as given in test plans and reasons for deviations if any.

fiii) The data furnished shall prove convincingly that:

I) The system meets the Guaranteed performance objectives.
II) Mechanical/Optical/Electrical limits were not exceeded.
III) Failure profile during the tests are well within the specified limits.

ANNEXURE

Annexure '1' : Cable Construction for 24 count CSTA Optical Fibre Cable
Annexure '2' : List of Special Tools & Tackles for OFC.
Annexure "3" : DATA TO BE FURNISHED BY THE BIDDER

Annexure '1'

Suggestive Schematic Constructional Diagram For 24 Fibre OFC (Ref cl 5.1.1 above) (Bidder has to provide details as per spec requirement)

Fibre colors : BI, Or, Gr,, Br, SL, Nat

Loose Tube colours : BI, Or, Gr, Br

Filler colors : Black/Natural

Outer Diameter : 16 mm Maximum

Annexure '2'

List of Special Tools and Tackles for OFC:

The bidder shall fill quoted for the list provided against each item in the un-priced offer of the bid (Bidder is required to quote for all items in this bid document) (supply if applicable; refer MR)

Special Tools and Tackles

Optical Fibre Cable preparation tool kit (Each set consisting of followings)

1.	Three Wheel cutter (HDPE/ MDPE/ CSTA/ ECCS etc. accurately	1 No.
2.	Sheath Cutter (for cutting sheath)	1 No.
3.	Adjustible torgue wrench with adopter	1 No.
4.	Adjustible Knife	1 No.
5.	Hack-Saw (small)	1 No.
6.	Armour punch	1 No.
7.	Measuring tape - SS (3 meters)	1 No.
8.	L-N key	1 No.
9.	Cable Cutter	1 No.
10.	Crosshead screw driver	1 No.
11.	Flat head screw driver	1 No.
12.	Combination Plier	1 No.
13.	Scissors	1 No.
14.	Flat spanners	1 No.
15.	Loose tube cutter	1 No.
16.	Stripper	1 No.
17.	V-Groove	1 No.
18.	Installation kit for splice closures	1 No.
19.	Fibre Cleaver (Diamond cutter)	1 No.
20.	5 Meter pigtails with FC/ PC Connector at one end	1 No.
21.	10 meter patch cord with FC/PC Connector at both end	1 No.

2 sets of documentation for Technical literature for Tools and Tackles and user manuals shall be provided.

Annexure -3

DATA TO BE FURNISHED BY THE BIDDER:

(Bidder shall furnished this information at the time of their offer otherwise their offer may be rejected / disqualified for OFC work)

Sl. No.	Description	Specification	To be filled by bidder
1	Name & address of the Bidder for OFC.		
1.1	Whether Bidder is OFC Manufacturer	OFC	Yes/ No
1.2	Supply Record		
1.2 a	Manufacturing facilities from which OFC were supplied for earlier projects within last three years from the bid date.	- Jelly Filled, 1300nm/ 1550nm, single mode CSTA/ ECCS, slotted core / loose tube OFC, as per ITU G-652 - OFC as per ITU G-655	
1.2 b	Whether the manufacturing facilities for the cables in 1.2 a above is Bidder's own facility.		Yes/ No
1.2 c	Detail of order in respect of having supplied minimum * KMs of OFC in last three years including at least ** KMs of steel Tap armoured OFC. * / ** Refer BEC – Technical	* KMs (minimum) ** KMs (minimum)	
1.2 d	Detail of manufacturing facilities of OFC for the project including locations / capacity etc.		
1.2 e	Optical fiber cable offered & available range		
1.2 f	Enlist the documentary evidence of Bidder's capability to manufacturing and supply of above a) P.O.Copies Order completion certificate	To be enclosed	
1.2 g	Name of the manufacturer of Optical fibre		
1.3	OFC rejected / found defective after supply		
2.0	**Jointing Closure**	If applicable	
2.1	Name and Address of the Bidder / supplier		
2.2	Place of manufacturing		
2.3	Users certificate confirming satisfactory performance for at least six months as on bid due date.		
2.4	Special tool and Tackles as per the list given in the Bill of quantity		

The Bidder shall be entirely and exclusively responsible for all works under this bid document. Bidder to fill blank spaces (marked (b)), of this form. Legend : NA – Not applicable.

Sl. No	Description	Performed by (Provide name)	Place of execution of the activity
1.1	Single source responsibility with Performance guarantee for successful completion of scope of work for this project.		
1.2	Design & Engineering		
1.3	Optical fiber cable & accessories		
1.4	Documentation		

Bidder shall specifically indicate the deviation related to technical work if any and give proper justification with documentary evidence for specific deviation.

****

TECHNICAL SPECIFICATION FOR CATHODIC PROTECTION WORKS & CATHODIC PROTECTION MONITORING SYSTEM

Rev. : 3
Edition : 1

SPECIFICATION
FOR
CORROSION SURVEY

SPECIFICATION NO.: MEC/S/05/21/016C

(OIL & GAS SBU)
MECON LIMITED
DELHI 110 092

CONTENTS

SL. NO.	DESCRIPTION
1.0	SCOPE
2.0	CODES AND STANDARDS
3.0	GENERAL
4.0	SOIL RESISTIVITY SURVEY
5.0	TESTS ON SOIL SAMPLES
6.0	ADDITIONAL DATA COLLECTION
7.0	REPORT
8.0	INFORMATION REQUIRED WITH BID

AMENDMENT STATUS

Sl. No.	Clause / Paragraph / Annexure / Exhibit / Drawing Amended	Page No.	Rev.	Date	By		Verified	
					Name	Sig.	Name	Sig.
1	Revised & Issued as standard specification	-	1	May-2011	AM		QA	
2	Revised & Issued as standard specification	-	2	Oct-2015	AM	MKJ	DG	
3	Revised & Issued as standard specification	-	3	Oct-2015	AM	MKJ	DG	

1.0 SCOPE

The specification covers the corrosion survey including measurement of soil resistivity, chemical analysis of soil/ water and other cathodic protection related data collection along right of way of the pipelines.

2.0 CODES AND STANDARDS

Equipment and measurement techniques shall unless otherwise specified, conform to the requirement of following latest applicable standards:-

BIS Specifications
BS Specifications and Codes of Practice
NACE TM0106:2006 [Detection, Testing, and Evaluation of Microbiologically Influenced Corrosion (MIC) on External Surfaces of Buried Pipelines]
NACE standards
Pbody book on control of pipeline corrosion

3.0 GENERAL

This specification defines the basic guidelines for carrying out the corrosion survey. Contractor shall be responsible for providing necessary data interpretation based on corrosion survey measurement which is intended to form a basis for design of cathodic protection system for the pipeline to be buried along ROW.

4.0 SOIL RESISTIVITY SURVEY

4.1 Unless otherwise specified the soil resistivity measurements shall be carried out at intervals of approximately 500 mtr. along the ROW. Where soil resistivity is less than 100 ohm mtr and two successive readings differ by more than 2:1 then additional soil resistivity readings in between the two locations shall be taken.

4.2 To carryout the soil resistivity measurement Wenner's 4 pin method or approved equal shall be used. The depth of resistivity measurement shall be around the burial depth of the pipeline or 1.5 mtr & additional depth of 2.5 mtr (approx.) & 3.5 mtr (approx.) or more shall be taken for Temporary CP design & shallow bed design for Permanent CP design. In general the resistivity of soil which shall be surrounding the pipe shall be measured. Hence the depth of measurement/ electrode spacings may vary depending on topography and strata at the area.

4.3 At locations where multi layer soil with large variation in resistivity/ corrosiveness is expected and/ or locations specifically advised by Owner or his representative resistivity measurements at additional depth.

4.4 For design of Permanent CP deep well anode ground beds two or more ground bed plots may be required to be selected for soil resistivity survey at proposed anode bed location. Depth of soil resistivity shall be as per type of anode ground bed.

For shallow type-1.5, 2.5 & 3.5 meter depth

For Deepwell anode bed-1, 3, 5, 7, 10, 15, 20, 25, 30, 35, 40, 45, 50, 100.....Meter as per depth of anode ground bed

4.5 Soil layer resistivity shall be calculated from soil survey results to enable to know the layer resistivity and to compensate the averaging effect of wenner's four pin method.

4.6 At places where Right-of-way has not yet been cleared, measurement shall be made right over the centre line of pipeline route surveyed accounting for the cuttings/ fillings also.

4.7 Observations shall be made enclosing the soils adjoining the trench wherever pipeline trenching has already been done.

4.8 The observations shall be made enclosing the soil immediately surrounding the pipeline route where right of way has been cleared but trenching has not been done.

4.9 All measurement shall be taken at right angles to the right of way unless otherwise asked by Owner or his representative at site.

4.10 At places in right of way where other pipelines are already existing care shall be taken to precisely locate such pipes line and take such precautions that observations are not adversely affected by presence of such pipelines.

4.11 Care shall also be taken that the observations are not influenced by presence of other earth currents in the area especially in the vicinity of HT lines and plants using earth return in their source of power etc.

4.12 Wherever possible/ advised by Owner or his representative depth of water table shall be determined by resistivity observations.

4.13 All measurements shall be made and recorded in metric units. While recording the data reference to the nearest point shall be made. To provide visual representation of variations in the resistivities along right of way, values shall be plotted on semilog graph sheets. The resistivity graph shall also indicate the resistivities at additional depths measured at various locations and depth of water table.

5.0 TESTS ON SOIL SAMPLES

Soil/ water samples shall be collected along the right of way for analysis. Samples shall be collected on an average at one location per every 5 km along right of way with minimum at two locations. Exact locations shall be decided at site depending on the type of soil, soil resistivity and in consultation with Owner or his representative. The soil samples shall be collected at 1 mtr, 2 mtr & 3 mtr depth at each location for Temporary CP system & for shallow type anodebed location for Permanent CP system. Collected soil sample shall be stored in sealed containers for its chemical testing.

The collected soil/ water samples shall be analysed to determine presence and percentage of corrosive compounds i.e. chloride, sulphate, including moisture content, oxygen activity, MIC, presence of bacteria and pH value at NABL accredited laboratories as per NACE TM 106:2006.

6.0 ADDITIONAL DATA COLLECTION

The following data shall be collected with a view to generate design data of evaluation of cathodic protection interaction possibilities due to presence of other services in right of way and its vicinity.

6.1 Route and types of foreign service/ pipelines in and around, running parallel or crossing the right of way.

6.2 Diameter, wall thickness, pressure, soil cover etc. of the foreign pipeline.

6.3 Foreign pipeline coating details.

6.4 Details of existing cathodic protection systems protecting the services including rating and location of grounds bed, test station locations and connections schemes etc. Where pipeline is likely to pass close to any existing ground bed, necessary anode-bed potential gradient survey shall be carried out.

6.5 Interference remedial measures existing on foreign pipelines/ services/ shall be collected from the owner of the foreign pipeline/ services.

6.6 Graphical representation of existing structure/ pipe to soil potential records, Transformer Rectifier Unit/ CP Power source voltage/ current readings.

6.7 Possibilities of integration / isolation of the proposed pipeline CP System with foreign pipeline / structure CP System, which may involve negotiation with Owner's of foreign services.

6.8 Crossings or parallel running of any H.T. AC/ DC overhead line with in approximately 25 mtr from ROW along with details of voltage rating, fault level etc.

6.9 Voltage rating, phases and sheathing details of parallel running or crossing of under ground cables with ROW.

6.10 Crossing and parallel running of electrified and non-electrified railway tracks along with details of operating voltage and type (AC/ DC) as well as abandoned tracks near ROW having electrical continuity with track in use.

6.11 Information on existing and proposed DC / AC power sources and system such as electric substations / earthing stations, fabrication yards with electric welding in the vicinity of the entire right of way.

6.12 Major river / canal crossings.

6.13 Major cased crossings.

6.14 Any other relevant information that may be needed in designing and implementing of proper cathodic protection scheme for the proposed pipeline.

7.0 REPORT

On completion of all the field and laboratory work, an interim report incorporating results generated from surveys, additional data collected, results of test carried out, etc. shall be submitted for comments/ approval. The final report incorporating comments/ missing data shall be furnished for records. The report alongwith various drawings, graphs etc. prepared in connection with the work shall be submitted alongwith six prints by the contractor.

8.0 INFORMATION REQUIRED AFTER AWARD OF CONTRACT

8.1 Instruments that will be used for carrying out soil resistivity survey and its calibration status/certificate.
8.2 Measures that will be taken to avoid foreign pipelines/ HT lines etc. affecting the soil resistivity observations.
8.3 Measurement location identification procedure.
8.4 Procedure for collection of soil samples & sealing of the samples.
8.5 Description of soil test procedure.
8.6 Specification of soil testing instruments.
8.7 Formats for presentation of results.

-X-X-X-

Rev. : 0
Edition : 4

SPECIFICATION
FOR
TEMPORARY CATHODIC PROTECTION SYSTEM

SPECIFICATION NO.:- MEC/TS/05/E9/016A

(OIL & GAS SBU)
MECON LIMITED
DELHI 110 092

CONTENTS

SL. NO.	DESCRIPTION
1.0	SCOPE
2.0	CODES AND STANDARDS
3.0	CORROSION DATA
4.0	CATHODIC PROTECTION DESIGN PARAMETERS
5.0	CATHODIC PROTECTION DESIGN CRITERIA
6.0	SYSTEM DETAILS
7.0	INSTALLATION
8.0	CIVIL WORKS
9.0	TESTING AND INSPECTION AT WORKS
10.0	PACKING AND TRANSPORT
11.0	SYSTEM TESTING COMMISSIONING AND INTERFERENCE MITIGATION
12.0	SYSTEM MONITORING
13.0	DRAWINGS AND DOCUMENTS
14.0	INSTRUMENTS, TOOLS AND SPARES
15.0	INFORMATION REQUIRED WITH BID

PREPARED BY:	CHECKED BY:	APPROVED BY:	ISSUE DATE :
(Aashish Moyal)	(Saurabh Singh)	(D.K. Pandey)	March, 2009
PREPARED BY:	CHECKED BY:	APPROVED BY:	ISSUE DATE :
(Pradipta Roul)	(Aashis Moyal/ Mukesh Jaiswara)	(Pankaj Srivastava)	June, 2026

AMENDMENT STATUS

Sl. No.	Clause / Paragraph / Annexure / Exhibit / Drawing Amended	Page No.	Revision	Date	By (Name)	Verified (Name)
1	Revised & re-issued as standard specification (Edition-4)	-	0	June - 2026	AM	PS

1.0 SCOPE

1.1 This specification defines the requirements of design, engineering supply of materials, installation, testing and commissioning of temporary cathodic protection system of external surface of cross country underground pipeline/structure including supplementing of corrosion survey, investigation for interference/ interaction problems and mitigation of the same. Unless otherwise specified monitoring of the temporary cathodic protection system till the commissioning of permanent C.P. System shall be carried out by temporary C.P. contractor.

This specification defines the basic guidelines to develop a suitable temporary cathodic protection system for the structure required to be protected. All data required in this regard shall be taken into consideration to develop an acceptable design and for proper engineering of the system.

1.2 Compliance with these specifications and/ or approval of any of the contractor's documents shall in no case relieve the contractor of contractual obligations.

1.3 In case where temporary and permanent cathodic protection works are being executed by the same agency, activities of permanent CP system which are common to temporary CP system shall be completed as part of temporary CP system. In cases where temporary and permanent cathodic protection works are being executed by different agencies, the contractual scope of work shall be referred for further details.

1.4 All work to be performed and supplies to be affected as a part of contract shall require specific approval of owner or his authorized representative. Major activities requiring approval shall include but not be limited to the following (TCP Work):-

- Corrosion survey data interpretation report and design basis for CP system.
- CP system design package
- Purchase requisitions for major equipment and vendor approval
- Detailed engineering package
- ITP & Quality Assurance for Factory test and site work
- Installation, Pre-Commissioning Procedure with record formats
- Field testing and commissioning procedure
- As Built Documentations
- Monthly Monitoring of the TCP system

2.0 CODES AND STANDARDS

The system design, performance and materials to be supplied shall, unless otherwise specified, conform to the requirements of the following latest relevant applicable specifications:

1.	ASTM G 57	:	Standard Test Method for Measurement of Soil Resistivity Using the Wenner Four-Electrode Method
2.	NACE Standard SP-0169	:	Standard Practice Control of External Corrosion on Underground or Submerged Metallic Piping Systems.
3.	NACE Standard SP-0177	:	Standard Practice Mitigation of Alternating Current and Lightning Effects on Metallic Structures and

			Corrosion Control System.
4.	NACE Standard SP-0286	:	Standard Practice the electrical isolation of Cathodically Protected Pipelines.
5.	NACE Standard SP-0572	:	Standard Practice for Design, Installation & Operation of Impressed Current Deep Ground beds
6.	NACE Standard SP-200	:	Standard Practice for Steel Cased Pipeline Crossings
7.	NACE Standard SP-0104	:	The Use of Coupons for Cathodic Protection Monitoring Applications
8.	BS EN 13636	:	Cathodic protection of buried metallic tanks and related piping
9.	IS: 7098 Part I	:	XLPE insulated cables.
10.	IS: 1554 Part I & II	:	PVC Insulated heavy duty electrical cables.
11.	IS: 8062	:	Code of practice for cathodic protection of steel structures
12.	NACE TM 0497	:	Measurement Techniques Related to Criteria for Cathodic Protection on Underground or Submerged Metallic Piping Systems
13.	NACE SP21424	:	Alternating Current Corrosion on Cathodically Protected Pipelines: Risk, assessment, mitigation & monitoring
14.	ISO 15589-1	:	Petroleum, petrochemical and natural gas industries — Cathodic protection of pipeline systems —Part 1: On-land pipelines
15.	ISO 21857	:	Petroleum, petrochemical and natural gas industries — Prevention of corrosion on pipeline systems influenced by stray currents
16.	ISO 22426:2020	:	Coupons **used in cathodic protection (CP)** systems to assess their effectiveness on buried and immersed metallic structures like pipelines
17.	ISO-16440-2016		Petroleum and natural gas industries — Pipeline transportation systems — Design, construction and maintenance of steel cased pipelines
18.	OISD 113	:	Classification of Area for electrical installations at Hydrocarbon processing and handling facilities
19.	OISD 141	:	Design and requirement of Cross Country Pipelines
20.	OISD 241	:	Guidelines for Integrity Assessment of Cross Country Pipelines
21.	OISD 188	:	Corrosion Monitoring of Offshore & Onshore
22.	NACE TM0101	:	Measurement techniques related to criteria for cathodic protection

23.	ASTM B418	:	Cast and Wrought Galvanic Zinc Anodes
24.	ASTM B843	:	Magnesium Alloy Anodes for cathodic protection
25.	ASTM G57	:	Field measurement of soil resistivity using wenner four pin electrode method
26.	NACE SP0502	:	Standard Practice Pipeline External Corrosion Direct Assessment Methodology
27.	NACE SP0207	:	Performing Close-Interval Potential Surveys and DC Surface Potential Gradient Surveys on Buried or Submerged Metallic Pipelines
28.	NACE TM0102	:	Measurement of Protective Coating Electrical Conductance on Underground Pipelines
29.	ISO 18086	:	Corrosion of metals and alloys — Determination of AC corrosion — Protection criteria
30.	BS EN 50162	:	Protection against corrosion by stray current from direct current systems
31.	BS EN 15280	:	Evaluation of AC corrosion likelihood of buried pipelines applicable to cathodically protected pipelines
32.	IS/IEC 60079	:	Electrical apparatus for explosive gas atmospheres – general requirements
33.	IS 3043	:	Code of practice for Earthing
34.	IS 5571	:	Guide for selection of electrical equipment for hazardous Area
35.	IS 5572	:	Classification of hazardous areas (Other than mines) having flammable gases and vapours for electrical installations.
36.	IS/IEC 62305	:	Protection Against Lightning
37.	IEC 60529	:	Degrees of Protection Provided by Enclosures (IP Code)

- PNGRB Guideline for Cross country pipelines
- A.W. PEABODY-Book on control of pipeline corrosion
- Latest IE rules/ CEA rules.

API RP 500 Recommended Practice for Classification of Locations for Electrical Installations at Petroleum Facilities

OISD-STD-137 Inspection of electrical equipment

OISD-STD-141 Cross country liquid hydrocarbon pipeline

PNGRB-G.S.R.
Infra/ T4S/ P&PPL/01 Technical Standards and Specifications including Safety Standards for Petroleum and Petroleum Products Pipelines

2.1 In case of imported equipment standards of the country of origin shall be applicable if these standards are equivalent or stringent than the applicable Indian standards.

2.2 In case Indian standards are not available for any equipment, standards issued by IEC/BS/VDE/IEEE/NEMA or equivalent agency shall be applicable.

2.3 The equipment shall also confirm to the provisions of Indian Electricity rules and other statutory regulations currently in force in the country.

2.4 In case of any contradiction between various referred standards/ specifications/ data sheet and statutory regulations the following order of priority shall govern with no additional time and cost to Owner, stringent of the same shall be followed without any additional time and cost to Owner/PMC.

- Statutory regulations.
- Schedule of rates.
- Design Basis.
- Data sheets.
- Scope of Work/ Job specification.
- Standard Specification.
- Codes and standards.

3.0 CORROSION DATA

3.1 The corrosion survey including soil resistivity data along ROW and other data required for CP design is attached with this document. However, verification of its veracity and adequacy shall be the entire responsibility of the contractor. In addition, contractor shall have to generate/ collect additional data as required for completeness of the job. Contractor shall also carry out soil resistivity survey at temporary anode ground bed locations for proper design of ground beds. Wenner's 4-pin method or approved equal shall be used for such measurements. Survey instruments shall have maximum AC and DC ground current rejection feature.

Care shall be taken to ensure that the resistivity observations are not influenced by the presence of foreign pipelines / structures, and earth currents in the vicinity of EHV / HV lines and installations using earth return in their power system etc.

3.2 Additional data to be collected

The following data shall be collected to generate design data for evaluation of interaction/ interference possibilities due to presence of other services in ROW/ in vicinity.

i. Route and types of foreign service/pipeline in and around or crossing the right of way (including those existing and those which are likely to come up during contract execution or any abandoned pipelines).

ii. Details of Existing Pipeline including diameter, Year of laying/ commissioning, Depth of laying_ At crossing, wall thickness, pressure, pipeline coating against corrosion, soil cover used in case of pipelines.

iii. Detail of the existing cathodic protection system protecting the services i.e. location, rating, type of protection, anode beds, anode bed location, test station locations and their connection schemes.

iv. Graphical representation of existing structure/ pipe-to soil potential records. CP unit current/ voltage readings.

v. Remedial measures existing on foreign pipeline/services to prevent interaction/interference.

vi. Possibility of integration/isolation of CP system of the foreign service/ pipeline with that of the proposed pipeline, which may involve negotiations with Owner's of foreign services

vii. River crossing with detail of location/chainage, Name of river, Length of river.

viii. Crossing and parallel running of electrified and non-electrified traction (along with information regarding operating voltage, type AC/DC etc.) as well as abandoned tracks near ROW having electrical continuity with the tracks in use.

ix. Crossing and parallel running of any HT/AC/DC overhead line (existing/proposed) along with details of voltage, type AC/DC etc.

x. Voltage rating, phases, number of cores and sheathing details of under ground power cables, running in parallel or crossing ROW.

xi. Information on existing and proposed DC/AC power sources and system having earth as return path, in the vicinity of the entire pipeline, route such as HV/DC sub stations, fabrication yards with electric welding etc.

xii. Any masonry work for other concrete or non-conductive constructions in the ROW which may block the CP current or cause interference to the pipeline.

xiii. Any other relevant information that may be needed in designing and implementing proper protection scheme for the proposed pipeline.
Unless otherwise mentioned, Contractor shall conduct necessary potential gradient survey for any existing anode ground bed that may interfere with the CP system of the pipeline covered under this project.

3.3 Report

After completion of all field work, a report incorporating all the results generated from site surveys and details of additional data collected shall be submitted to the MECON/CLIENT for necessary approval. The report shall also contain detailed interpretation of survey results and resistivity data enclosed, probable interference prone areas etc. to form design basis for the scheme of cathodic protection. This report shall be plotted on semi-log graph sheets.

4.0 CATHODIC PROTECTION DESIGN PARAMETERS

Unless otherwise specified in the project specifications, following parameters shall be used for design of temporary cathodic protection system.

Those parts of sacrificial anode cathodic protection system which will be integrated with permanent CP system shall be designed based on permanent CP parameters.

4.1 Protection current density

Type of Coating	Minimum Protection current density*@30 deg C Temporary CP (μA/m²)
3LPE or 3LPP	50
FBE	400
Liquid epoxy Coal tar or bituminous coating	800

Acceptable Coating current density - HDD Section during CIT test 3LPE or 3LPP	up to 20** (As per ISO 15589-1:2015)

Pipe to soil "ON" potential shall not be more negative than (-) 1.2V during TCP.

*The values given in Table 1 account for the pipelines operating at not more than 30°C temperatures. Where pipeline operating temperatures exceed 30°C a temperature correction factor shall be applied: current density value shall be increased by 25% for each 10°C rise in operating temperature above 30°C.

** During CIT test if current density found to be more than mentioned in the table, necessary corrective action shall be taken by the contractor which includes rectification of the coating defects, additional survey like – CAT Frame A/ ACVG, DCVG, specific coating resistance measurements, re-assessment of coating after rectification etc. Final decision regarding acceptance of the CIT test results and HDD section shall be taken by Client/End user, opinion of the CP specialist may be taken for further evaluation of the coating results.

4.2 Safety factor for current density : 1.3

4.3 Anode utilization factor : 0.88 for Centre Connected Mg Anodes
0.6 for End Connected Mg Anodes &

0.85 for Centre Connected Zn Anodes
0.5 for End Connected Zn Anodes
0.6 for Ribbon anodes

4.4	Pipeline natural potential	:	(-) 0.45 V w.r.t. CSE
4.5	Minimum Potential at farthest Point	:	(-) 0.850 V w.r.t. CSE (Polarized)_ Through out the line.
4.6	Maximum Potential at Drain Point	:	(-) 1.2 V wrt CSE(Polarized)
4.7	Steel Resistivity	:	2.2 X 10^-7 Ohm-M

4.8 Based on the given parameters and site requirements the number of anodes is to be calculated. Number of anodes shall be considered whichever is maximum as per the following parameters:
- Current output / anode
- Anode Consumption

4.9 Unless otherwise specified in project specification the design life of temporary CP shall be as mentioned in Scope of work and that of permanent CP shall be 35 years.

5.0 CATHODIC PROTECTION DESIGN CRITERIA

Refer design basis for CP Criteria.

6.0 SYSTEM DETAILS

The system shall include the following major equipment/sub-systems unless otherwise specified:

- Sacrificial anodes and anode ground beds
- Test stations
- Surge diverter/grounding cell
- Permanent Reference Electrodes
- Polarisation cells
- Interconnecting cables
- Cable to pipe connections
- CP System at cased crossings
- Electrical resistance probes & Reader
- Polarization Coupons

All equipment shall be new and supplied by approved reputed manufacturers. Equipment offered shall be field proven. Equipment requiring specialized maintenance or operation shall be avoided as far as possible and prototype equipment shall not be accepted. Make and construction of all material shall be subject to owner's approval.

The detailed specification of each system and equipment shall be furnished by the contractor. However, certain minimum requirements for the major equipment are highlighted in this document.

As far as possible equipment including test stations, anode lead junction boxes, etc., shall be located in safe area. All equipment located in hazardous areas shall be of flame proof type as per IEC 600079 and shall be weather proof to IP-65 and suitable for hazardous area defined in the design basis/scope of work. All Indigenous equipment shall be certified by PESO.

All imported equipment for hazardous area may be tested and certified by an independent

certifying agency of country of equipment origin and shall be approved by the concerned statutory authority in India.
A copy of approval from local statutory authority, as applicable such as Petroleum & Explosives Safety Organization (PESO) in India with test certificate from recognized test house like Central Institute of Mining and Fuel Research (CIMFR)/ Electronics Regional Testing Laboratory (ERTL) etc. for flameproof enclosure/ intrinsic safety, as specified in the specification, as per relevant standard for all Indian manufactured equipment.

6.1 Anode Ground Beds

6.1.1 The pipeline shall be protected by pre-packed zinc/ magnesium anodes.

6.1.2 Along ROW where soil resistivity predominantly remains low, ranges from 0-10 ohm-mtr and pH value are within 9, zinc anodes may be provided. Anodes of type I as per ASTM-B 418 standard shall be used for seawater, brackish water or saline electrolyte application and anode of type II as per ASTM-B 418 standard shall be used for fresh water, back fill and soil applications.

6.1.3 Along ROW where soil resistivity predominantly in the range of 10 ohm. m to 80 ohm. m low potential (1.55V) magnesium anodes may be provided.

6.1.4 At saline soil Ag/Agcl reference electrode should be used and not Zinc electrode.

6.1.5 Along ROW where soil resistivity is predominantly in the range of 80 ohm.m to 50 ohm.m high potential (1.75V) magnesium anodes may be provided.

6.1.6 At high resistivity area where resistivity is of the order of 50 ohm-m and above magnesium ribbon anodes may be provided.

6.1.7 Where magnesium anodes are used for protection of polyethylene coated pipelines, the anodes shall be preferably of low potential (1.55 V) type.

6.1.8 Anodes shall be installed along the pipeline at suitable intervals as per pipeline protection voltage attenuation calculations and ground bed resistance/ current output of anode installations. Minimum one anode installation shall be provided for every 1 (one) km of the pipeline. At high resistivity area the magnesium ribbon anodes shall be installed all along the pipeline by the side of the pipeline in the pipeline trench or in separate trench.

6.1.9 Suitability for proper operation of the selected type of sacrificial anodes for the soil conditions with particular attention to carbonates, bicarbonates, phosphates and nitrates shall be checked by the contractor. The anodes shall be laid in proper type of back fill, such that the effect of soil is minimum on the anode performance and life. Suitable safe guards against anode passivation in prevailing soil shall be taken by the contractor.

6.1.10 Each electrically continuous section of pipeline shall preferably be protected totally by one type (material) of anodes to avoid inter-anode circulation currents.

6.1.11 The anodes shall be installed at sufficient depth to reach moist soil and shall be separated from the pipe line by at least 5m and 2m for magnesium and zinc anodes respectively. The magnesium ribbon abode shall be separated from the pipeline by at least ½ meter. The anode connections to pipeline

shall be routed through test stations.

6.1.12 For sacrificial anode ground bed which shall be integrated with permanent CP System the leads of all the anodes shall be brought up to the test station and shall be terminated individually.

6.1.13 The number of anodes at each ground bed shall be sufficient for providing the specified pipe protection current density taking into consideration the ground bed resistance, pipe coating resistance, cable resistance, etc. Contractor shall prepare a table for number of anodes required at different soil resistivities to produce the specified protection current. Any deficiency in the protection system if noticed during commissioning or during monitoring shall be corrected by the CP contractor by suitably augmenting the system with additional anodes without any cost / schedule implications.

6.1.14 For the portion of the pipeline for which for CP system has been specified based on the permanent CP system parameters, the contractor shall ascertain the requirement of the cathodic protection current density indicated in Cl. No. 4.1 above. Current density test /survey shall be conducted by the contractor to establish the adequacy of the CP current requirement & number of anode ground beds.

6.2.1 Magnesium anode

The anode shall confirm to the requirements of ASTM-B 843 standard. The anode shall be of high manganese, magnesium alloy packed with special back fill. The metallurgical composition, potential and consumption rate of anode shall be as below:

(i) Composition:

Element	Weight (Low Potential type)	Weight (High Potential type)
Manganese	0.15%	0.5 – 1.3%
Copper	0.02% max.	0.02% max.
Silicon	0.1% max.	0.05% max.
Zinc	2.5% - 3.5%	
Aluminium	5.3% - 6.7%	0.01% max.
Iron	0.003% max.	0.03% max.
Nickel	0.002% max.	0.001% max.
Other metallic elements		
- Each	-	0.05% max.
- Total	0.3% max.	0.3% Max.
Magnesium	Balance	Balance

(ii)	Anode closed circuit potential	1.55 volts(CSE)	1.75 volts (CSE)
(iii)	Anode consumption rate	7.9 kg/(A yr)Max.	7.9 kg/(A yr) Max.

6.2 Zinc Anode

The anode shall confirm to the requirements of ASTM-B 418 standard. The anode (other than ribbon anode) shall be packaged with special back fill. The metallurgical composition of anode,

potential and consumption rate shall be as below. Anodes of Type-I shall be used for seawater, brackish water or saline electrolyte application and anodes of Type-II shall be used for fresh water, back fill and soil applications.

(i) Composition:

Element	Weight Type-I	Weight Type-II
Aluminum	0.1% to 0.5%	0.005% max.
Cadmium	0.025 – 0.07%	0.003% max.
Copper	0.005% max.	0.002% max.
Iron	0.005% max.	0.0014% max.
Lead	0.006% max.	0.003% max.
Others	0.01% max.	-
Zinc	Remainder	Remainder

(ii)	Anode closed circuit potential	1.1 volts	1.1 volts
(iii)	Anode consumption Rate	11.24 kg/(A yr) max.	11.24 kg/(A yr) max.

6.2.1 Contractor shall furnish spectrographic analysis from each heat both for zinc and magnesium anodes along with electrochemical test results. Bidder shall also mention method of spectrograph - Atomic Absorption/Emission Spectrometry/Photometric with data sheet submitted for approval.

6.2.2 The anodes for grounding of cathodically protected above ground pipelines at intermediate SV station, pigging stations, etc., grounding of motor operated valves on cathodically protected portion of the pipeline, grounding of pipeline through polarization cell at EHV / HV line crossings or running in parallel, etc. shall be of minimum 20 kg net weight each. The anode and cable terminations shall be suitable for the anticipated fault current at the location of installation. For pipelines protected by sacrificial anodes, for directly grounding the pipeline shall be of the same type as the one provided for the protection of the pipeline.

6.3 Special Backfill

The composition of special back fill for anodes shall be as below. In any case, the thickness of back fill shall not be less than 50 mm on all sides of the anode.

Gypsum	75%
Bentonite Clay	20%
Sodium Sulphate	5%

6.3.1 The anodes shall be provided with cable tail of sufficient length to reach junction box test station as applicable without tension.

6.3.2 Tolerance in fabrication of anodes

The anode surface shall be free from cracks which may reduce the performance of the anode. Any cracks which follow the longitudinal direction of elongated anodes shall not be acceptable.

Small cracks in the transverse direction of elongated anodes and in anodes of other shapes may be accepted provided the cracks would not cause any mechanical failure during service of the anode considering that the combination of cracks and lack of bond to the anode core is detrimental.

For transverse cracks the acceptable limits shall be furnished by the bidders along with the offer.

The anode shall be free from excessive shrinkages. The following limits shall be used:

- Maximum 10% of the depth of anode or 50% of the depth of the anode core whichever is less. The depression may be measured from the edged of one side.

The surface of the anodes shall be free from coatings and slag/dross inclusions etc. Visual Inspection shall be carried out on all the Anodes regarding surface finish, excessive shrinkage, cracks, cable joint to anode core etc.

The maximum deviation from straightness shall not exceed 2%.

The weight tolerance on individual anodes may be taken as ± 5%. The total weight of the anodes shall not have negative tolerance.

Dimensional tolerance shall be as follows:

Length	± 2.5%
Width/thickness	± 5%

Min One Anode per heat shall be radio graphed to evaluate slags, voids, inclusion etc. or as per requirement. At least 10% number of Anodes from each heat to be checked for conformity to Dimensions & Weight.

At least one Anode, shall be Tested Destructively to check bond between Anode material and steel insert, slag, inclusion etc. Failure of one anode during the test shall make the entire anode lot liable for rejection.

6.4 Test Stations

6.4.1 Test stations shall be provided along the pipeline ROW for monitoring the performance of the Cathodic Protection system at intervals not exceeding 1000 meters area unless otherwise specified. In addition to above, test stations shall also be provided at the following locations as per scope of work/PJS:

a. At the locations of anode ground beds
b. At all insulating joints
c. At vulnerable locations with drastic changes in soil resistivity
d. At connections of surge diverters, grounding cells and polarisation cells/SSD
e. At both side of the HDD crossing and Zero HDD more than 300 mtr and one side of HDD crossing and Zero HDD if length is less than 300 mtr.

f. At HV AC/DC overhead line crossings and selected locations where HT overhead line is in the vicinity of the pipeline & running parallel.
g. At location of cable crossing.
h. At tap-off stations, at receipt station.
i. At both sides of major river crossings.
j. At high voltage cable crossings or along routes where HV cables are running in parallel.
k. In the vicinity of DC net works or grounding system where interference problems are suspected.
l. At crossings/parallel running of other pipeline / structures
m. At the locations of reference cell and Electrical Resistance probe installation.
n. At both sides of cased crossings, at both sides of railway line crossings.
o. At any other locations considered vulnerable locations where interference is expected
p. At location of CTSU.
q. At the locations of reference cell, Polarisation coupons Installation and ER probe installation.
r. At locations of Sectionalising Valve (SV) stations & IP (Intermediate Pigging Stations).
s. At any other locations considered necessary by owner/owner's representative
t. No. of connections in the stations shall be minimum 12 Nos.

6.4.2 Bond stations shall be provided with high quality shunt & resistor at required locations as a means to monitor and control current flow between the pipeline and foreign pipelines / structures / electrified railway tracks etc. that crossing and running parallel to the pipeline in common ROW or within 25 metre from the pipeline.

6.4.3 Test stations used for sacrificial anodes shall have high quality shunt for measurement of anode current, and provision for resistance insertion to limit the anode current output & anode disconnecting link.

6.4.4 Sealing of Test stations shall be carried out by solid foam sealant or other solid sealing compound as approved by the engineer-in-charge.

6.4.5 Test station with current measuring facility shall be provided at each intermediate CP station drainage point (to measure pipeline from drainage point), at interference prone areas, on both sides of major river crossings and minimum one for every 5 km (max.) alongwith pipeline.

6.4.6 All test stations shall have weather proof enclosure, having degree of protection IP 55 with hinged lockable shutter. Enclosure shall be made of sheet steel of at least 3 mm thickness and shall be suitable for M.S. post mounting. The test stations shall be designed with terminals required for both temporary and permanent CP system and shall be suitable for total life of permanent CP system.

6.4.7 For test stations with GPS facility (CTSU) and data logger, the TLP box shall be suitable for mounting data logger and GPS device and shall be designed such that it is difficult to damage/steal (Welded strips shall be provided all round the CTSU/Logger to make it steal proof).

6.4.8 The test stations shall be installed with the front of the test station facing the pipeline. The name plate of test stations shall in minimum carry following information.

- Test station number
- Chainage in km
- Test station connection scheme type
- Distance from pipeline in meters
- Direction of product flow

6.4.9 Terminal blocks and different scheme of wiring as required shall be provided in the test station as per the test station connection scheme sketch. Minimum 20% spare terminals shall be provided in each TLP.

6.4.10 The location of all the test stations shall be marked with their connection schemes and other relevant information's on alignment sheets. A detailed test station schedule shall be prepared.

6.5 Surge diverter, Grounding cell and Polarisation cell

6.5.1 Where high voltage (66 KV and above) transmission line runs in parallel or crosses the pipeline, the pipeline shall be grounded through polarisation cells (Solid State) & zinc anodes of minimum 20 kg net wt. each. Grounding shall be done at regular intervals of maximum 1.0 km where transmission lines run parallel within 100 meter of the pipeline (Both side of ROW) through polarisation cell to ground any surges on the pipeline that would appear in case of transmission line faults.

6.5.2 In case of continuous induction of voltage on the pipeline beyond safe limits is expected or observed during commissioning due to HV Line or other of any rating, the pipeline shall be grounded to a separate earthing system of Zn galvanic anodes/Zn Ribbon anodes/ Pre-packed AC mitigation wire through polarisation cell.

6.5.3 Explosion proof Surge Diverter (Spark Gap Arrester) shall be connected across each insulating joint to protect it from high voltage surges as per drawing.

6.5.4 The total system including cables, cable termination, anodes/ surge diverters, polarization cells shall be suitable for the anticipated fault current at the location of installation.

6.5.5 Unless otherwise specified on data sheet, the minimum rating of grounding cells, polarisation cells and surge diverters shall be as below:

(i) Polarisation cell

-Type	:	Solid state (Min. 5 kA @ 30 Cycle) or as per scope of work/PJS
-Steady state discharge Current Rating	:	Min 45A RMS @ 50Hz, IP67
-Blocking Voltage	:	+/- 2V DC/ -3/+1V
-Lightning Current	:	100kA (8/20 uS, as per IEC 62305)
-Leakage current	:	< 1 mA at rated CP voltage (1.2V DC)

< 10 mA at Max blocking voltage @ 20 Deg Temp and < 100 mA at max blocking voltage @ 65 Deg temp

(ii) Surge Diverter (Spark Gap Arrester)

-	Type	:	Spark gap, Explosion Proof Type
-	Current, 10/350 wave	:	100 KA (10/350 uS, Lightning)
-	Current, 8/20 wave	:	100 KA (Surge)
-	Spark over AC voltage	:	
-	50 Hz	:	1 kV
-	Impulse (1.2/50) micro sec)	:	2.2 kV

6.5.6 Grounding system, Surge Diverter (Spark Gap Arrester), and polarisation cell system shall be sized for the design life of permanent CP system. The zinc or magnesium anodes meant for pipeline grounding shall also be sized for the life of the permanent CP system taking into account the current discharge from the anodes. The grounding system shall have minimum resistance to earth to restrict the pipeline voltage as per NACE / VDE criteria but shall not exceed 2 ohms. The anodes shall be pre packed with special backfill adequately so that the performance of the anode is not affected by the carbonates, bicarbonates, nitrates, etc. present in the soil. In any case, the thickness of back fill shall not be less than 50 mm on all the sides of the anode.

6.5.7 In case of HT transmission overhead lines of voltage below 66KV also requisite mitigation measures should be provided to take care of continuous induction of voltage interface due to presence of transmission line in close proximity. The pipeline shall be grounded through polarization cell to earth system of HV tower causing the voltage induction or to a separate earthing system of zinc anodes through polarization cell. Pipe to soil AC PSP data shall be recorded for at-least 72 hrs at each HT (11 KV & above) line crossing the pipeline and running parallel.

6.5.8 Motor operated valves, located on the cathodically protected portion of the pipeline shall be grounded by a zinc or magnesium anode of 20 kg net where the type of anode provided for the CP system of the pipeline is zinc or magnesium respectively with SSD. The MOV power supply cable armour shall be insulated (by cutting and taping with insulation tape) at MOV end to avoid armour carrying CP current.

6.5.9 The above ground cathodically unprotected pipeline at intermediate SV stations, pigging stations, etc. and terminals shall be earthed with GI earth electrodes along with connection to the station main earth grid. The resistance to earth of grounding shall be limited to 2 ohms max.

6.6 Polarisation Coupons

The coupon shall have one side exposed area of 10 mm x 10 mm (or as decided in detail engineering to simulate the discharge current from coating holiday) unless other wise specified in project specification/data sheet/scope of work. The Polarisation Coupons shall be made from the material of the pipeline. Cable connection of 10 mm2 and 4 mm2 shall be provided to the coupon for connecting it to pipeline for cathodic protection and potential measurements respectively. Connection of coupon to pipeline shall be through a vacuum sealed magnetic reed switch housed

inside the test station/ rapid disconnection switch. The magnetic reed switch shall be rated to carry and break minimum 10 mA at 50 V DC to measure OFF psp. Coupons shall be installed at bottom 1/3rd portion of the pipeline and 250 mm away from the pipe surface

Polarisation coupons shall be provided as per the requirement of NACE SP104:2014.

Coupon shall be installed at every 10 KM for cross country pipelines and 5 KM in city area (with permanent ref cell) and additionally at CP station drainage points, predicted cathodic protection mid points along the pipeline, at locations where the pipeline is bonded to foreign pipeline/ structures, interference prone areas, marshy areas and at other locations as required during the post commissioning surveys and as instructed by Engineer-In -Charger, along the pipeline.

6.7 Electrical Resistance Probe

6.7.1 Where specified in project specifications, electrical resistance probes utilising the electrical resistance technique shall be provided along the pipeline at marshy areas and at vulnerable locations to monitor the external corrosion activity on the pipeline. The lead wires of the probe shall be connected to pipeline and terminated inside test station enabling periodic resistance measurement with the probe using a portable measuring instrument.

6.7.2 The material of the E/R probe element shall be of the same alloy as of the pipeline material. The E/R probes shall be provided preferably at the bottom portion of pipeline. The locations of E/R probes shall be got approved. Portable E/R probe reading instrument shall be supplied by contractor as per SOR/Data Sheet. The probe reading instrument have IP-55 protection & digital display.

6.8 CP at Cased Crossing

i) Casing should be avoided as far as possible. If cased crossing is unavoidable, Bare casing is always recommended with selecting higher thickness allowance as per API 1102.
ii) Any type of Casing filler conductive or insulating shall be (wax/bentonite etc) shall not be filled between annular space of casing and carrier.
iii) No sacrificial anodes (ribbon anodes) shall be used inside casing & carrier annular space.

6.9 Reference Cell Access Points

Reference cell access points shall be provided near insulating joint locations and at SV stations, where the ground is paved, for measurement of pipe to soil potentials. A perforated PVC pipe filled with native soil and buried at the location shall be provided for the purpose. The length of the PVC pipe shall be adequate to reach the native soil below the paving.

6.10 Painting

The sheet steel used for fabrication shall be thoroughly cleaned and degreased to remove mill scale, rust, grease and dirt. Fabricated structures shall be pickled and then rinsed to remove any trace of acid. The under surfaces shall be prepared by applying a coat of phosphate paint and a coat of yellow zinc chromate primer. The under surfaces shall be free from all imperfections before undertaking the finished coat. After preparation of the under surface, spray painting with two coats

of final paint shall be done. The finished panel shall be dried in oven in dust free atmosphere. Panel finish shall be free from imperfections like pin holes, orange peels, run off paint, etc.

All unpainted steel parts shall be painted with corrosion resistance paint as per approved procedure.

6.11 TCP Cables

TCP Cables shall be annealed high conductivity, tinned, stranded copper conductor, XLPE insulated 650/1100 V grade, armoured/un-armoured, PVC sheathed conforming to IS 1554 part-I.

The size of the copper conductor shall be 6 sq mm for anode cable from anode to buried junction box, 10 sq mm from junction box to test station, 10mm² from test station to pipeline. Underground JB shall be provided for anode requirement of 03 and above.

The size of the conductor shall be 6 sq mm for potential measurement, 10 sq.mm for current measurement and 25mm² for bonding, polarisation cell/grounding cell/Earthing and surge diverter connection purpose.

All anode tail cable connection with the iron insert of anode shall be tightly connected followed by Epoxy encapsulation & heat shrinkable PE Anode cap.

The anode cable from anode to junction box (buried) shall be un-armoured. The length of anode tail cable shall be sufficient enough to reach junction box (buried) in case of temporary CP anodes and up to test station in case of permanent CP sacrificial anodes.

7.0 INSTALLATION

7.1 Cable Laying

7.1.1 Cables shall be laid in accordance with approved layout drawings to be prepared by the contractor. No straight through joint shall be permitted in a single run of cable. Cable route shall be carefully measured and cables cut to required length. Minimum ½ metre cable slack shall be provided near anodes, pipeline and test stations to account for any settling.

7.1.2 All cables inside station/plant area shall be laid at a depth of 0.75 M. Cables outside station/plant area shall be laid at a depth of 1.5m. Cables shall be laid in sand under brick cover back filled with normal soil. Outside the station/plant area the routes shall be marked with Polyethylene cable warning mats placed at a depth of 0.9m from the finished grade.

7.1.3 All underground unarmoured cables forming part of permanent CP system shall run through PE sleeves. Cables along the pipeline shall be carried along the top of the pipe by securely strapping it with adhesive tape or equivalent as required.

7.1.4 Hume pipe of proper size shall be provided for all underground cables for road crossings.

7.1.5 Cables shall be neatly arranged in trenches in such a manner that criss-crossing is avoided and final take off to equipment is facilitated.

7.1.6 In case of above ground cable, all unarmoured CP cables shall be laid in GI conduits of sufficiently large size, up to accessible height for protecting against the mechanical damage.

7.1.7 The armour of all the cables from pipeline to test station (potential measurement, reference cell cables, cathode cables, etc.) and test station to ground bed (anode cable) shall be earthed only at test station end of the cable to avoid armour carrying CP current. The cable armour shall be insulated by cutting and taping with insulation tape.

7.2 Cable to Pipe Connections

All the cable connections to the pipeline including charged foreign pipeline shall be made using an approved exothermic process. A suitable water proof sealing system of the cable connections shall be made which will be compatible with parent coating system of the pipeline after exothermic process. The resistance of cable to pipe at the connection point shall not exceed 0.1 ohm. Coating shall be repaired after connection of cable conductor to pipeline. The coating repair material shall be compatible with the original coating and shall prevent ingress of water along the cable surface and at the interface of coating repair with the original pipe coating.

For charged pipeline pin-brazing shall be used. Eutectic solder shall not be acceptable for charged or non-charged pipeline.

8.0 CIVIL WORKS

All civil works associated with the complete cathodic protection work shall be included in the scope of contractor. This shall include providing cable trenches, foundation for equipment and all test stations, etc.

9.0 TESTING AND INSPECTION AT WORKS

9.1 OWNER/OWNER's representative shall visit the works during manufacture of various equipment to assess the progress of work as well as to ascertain that only quality raw material is used for the same. All necessary assistance during such inspections shall be provided.

9.2 The minimum testing, inspection requirements for all components/ equipments shall confirm to the requirements as defined in the relevant codes and standards. Detailed inspection and testing procedures along with the acceptance criteria shall be prepared by CONTRACTOR for OWNER's approval.

9.3 Test certificates including test records, performance curves etc., shall be furnished. All test certificates shall be endorsed with sufficient information to identify equipment to which the certificate refers to and must carry project title, owner's name and purchase order details etc.

9.4 Owner reserves the right to ask for inspection of all or any item under the contract and witness all tests and carry out inspection or authorize his representative to witness test and carry out inspection. CONTRACTOR shall notify the OWNER or OWNER's representative at least 20 days in advance giving exact details of tests, dates and addresses of locations where the tests would be carried out.

10.0 PACKING AND TRANSPORT

All equipment/material shall be protected for inland/marine transport, carriage at site and outdoor storage during transit and at site. All packages shall be clearly, legibly and durably marked with uniform block letters giving the relevant equipment/material details. each package shall contain a packing list in a water proof envelope. Copies of the packing list in triplicate, shall be forwarded to owner prior to dispatch. All items of material shall be clearly marked for easy identification against the packing list.

11.0 SYSTEM TESTING, COMMISSIONING AND INTERFERENCE MITIGATION

11.1 System testing at site.

11.2 Contractor shall furnish the detailed field testing and commissioning procedure for approval. Field tests as per the approved procedures shall be carried out on the equipment/systems before being put into service. the acceptance of the complete installation shall be contingent upon inspection and field test results.

11.3 Before the CP facilities are placed in operation all necessary tests shall be carried out to establish that all equipment, devices, wiring and connection, etc., have been correctly installed, connected and are in good working condition as required for intended operation.

11.4 Owner/owner's representative may witness all the tests. At least one week's notice shall be given before commencing the tests.

11.5 All tools, equipments and instruments required for testing shall be provided by CONTRACTOR.

11.6 Generally following tests shall be carried out and recorded in proforma given in subsequent clauses:

Checking : Visual inspection, comparison with drawings and specifications.

Inspection : Detailed physical inspection

Testing : Simulation tests of equipment to determine its operational fitness.

Cables

- Cable no.
- Voltage grade
- Conductor cross-section
- Continuity check
- Voltage test
- Insulation resistance values between core to earth and between cores
- All cables shall be tested by 500 V megger

Insulating joint

Checking of insulating joint for leakage, before and after energization of C.P. by means of insulating joint tester. Pipe to soil potential of both protected and non-protected sides of insulating joint shall be checked before and after energization of CP system.

Polarisation cell

- Location/identification number
- Rating
- Check for wiring
- Check for standby current drain with CP energization (current drain with respect to voltage across the cell shall be recorded)
- Details of grounding provided for polarization cell.

Grounding cell

- Location
- Type (no. of anodes)
- Ratings

Surge diverter

- Location/identification no.
- Ratings
- Check for healthiness
- Explosion proof enclosure
- Check for proper connection.

E/R Probe

- Location / Identification number
- Checking of wiring as per schematics
- Resistance reading of probe

Anode ground beds

- Location/test station number
- Current output of the ground bed
- Vertical / horizontal
- Check for actual layout and compliance with drawings.

11.7 Commissioning

11.7.1 Natural pipe to soil potential shall be measured at each test station location and casing pipeline at the locations of cased crossings prior to connecting anodes to pipeline. The pipe to soil potential observation shall be repeated after connecting the anodes after allowing sufficient time for polarization. The current output of the anode installation shall also be measured to ensure that it does not exceed the output current capacity of the anodes. In case the anode output current exceeds the rated capacity, it shall be controlled by insertion of resistance element in the anode

circuit inside test station and the pipe to soil potential shall be rechecked for adequacy of protection. Additional anodes shall be provided where required to achieve desired level of protection. In case pipe to soil potential exceeds the specified value, suitable resistance shall be inserted in the anode circuit to limit the potential.

Each anode installation shall become individually operational as above.

11.7.2 After connecting all the anode ground beds to pipeline, measurement of pipe to soil potentials shall be taken at each test station to ensure conformity to protection criteria along with coupon data.

11.7.3 In case of insufficient protection as per the CP design criteria on any portion of the pipeline, CONTRACTOR shall carry out necessary addition/ modification to the provided protection in consultation with the OWNER / OWNER's Representative.

11.7.4 Resistance readings of the probe shall be taken at all the locations of electrical resistance probes.

11.8 Interference Mitigation

11.8.1 Investigation shall be made for stray current electrolysis of the pipeline, mutual interface between the pipeline and foreign pipelines / structures, interference on foreign pipeline / structures due to the CP of the pipeline and ground bed. AC induction on pipeline due to overhead high voltage line, interference due to high voltage DC lines & grounding, electric traction, etc.

11.8.2 Where transmission lines cross the pipeline or run in parallel within or more than 25m from the pipeline, AC voltage measurements shall also be made on the pipeline to find out continuous induction of voltage. In case of induced voltage being beyond safe limits, the pipeline shall be grounded in line with clause no. 6.4 above.

11.8.3 Measurements including pipe to soil potential and pipeline current etc., on the pipeline/structure being CP protected shall be made to investigate the current discharge and collection locations.

11.8.4 In case of fluctuating stray currents investigation shall be made continuously over a period of time and if required simultaneously at different locations to find out the stray current source. For long time measurements, recorders shall preferably be used.

11.8.5 Where foreign pipeline (unprotected or protected by independent CP system) runs in parallel to the pipeline in same trench or very near to the pipeline, and is not bonded to the pipeline then investigation shall be made for current discharge points on both the pipelines.

11.8.6 Mitigation measured shall be provided depending on type of interference. These shall include installation of bond with variable resistor and diodes, installation of galvanic anodes for auxiliary drainage of current, adjustment/relocation (if possible) of offending interference source, provision of electric shield etc., depending on the type of interference.

11.8.7 Bonding with foreign pipeline/structure as a mitigation measure shall be provided where the owner of the pipeline/structure has no objection, otherwise, alternative mitigation measure shall be provided. Where bonding is provided for mitigation the bonding resistor shall be adjusted for

optimum value for minimum/no interference. Galvanic anodes installed as a mitigation measure shall be sized for the life specified for permanent CP.

12.0 SYSTEM MONITORING

The temporary CP system provided shall be monitored at all the test stations once in a month for healthiness/adequacy of protection till commissioning of permanent CP or for design life of temporary CP specified, whichever is earlier. During this period if any deficiency/interference in protection system is noticed the same shall be rectified/augmented by additional anodes as required. The monitoring report shall be submitted regularly to owner to review.

13.0 DRAWINGS AND DOCUMENTS

13.1 General

13.1.1 Within three weeks from the date of issue of PURCHASE ORDER, CONTRACTOR shall submit four copies of the list of all drawings/ datasheets/ manuals/ procedures for approval, identifying each by a number and descriptive title and giving the schedule date. This list shall be revised and extended, as necessary, during the progress of work

13.1.2 All drawings and documents shall be in English and shall follow metric system. Number of copies of each submission shall be as follows unless otherwise specified.

	Submission	No. of Copies
a.	For review/approval	4
b.	Drawings issued for execution construction	5+1
c.	Final / As built drawings execution/construction	5+1
d.	Operation/Maintenance manual, vendor data	5+1

13.2 Contract drawings and documents

13.2.1 As a part of the contract, drawings and documents shall be furnished which shall include but not be limited to the following:

a. Report on corrosion survey
b. Basis of system design calculations, equipment selection criteria and sizing calculations.
c. Bill of material, material requisitions, purchase requisitions

13.2.2 Detailed construction drawings (including as built drawings)

a. Sacrificial anode fabrication drawings
b. Typical layout drawing for anode ground bed installation and connection
c. Equipment layout, cable layout and schedules

d. Fabrication, installation and connection scheme drawing for different types of test stations.
e. Fabrication and installation details of surge diverter, grounding cell and polarisation cell with its enclosure and housing
f. Cable-to-pipe joint details for charged and non-charged pipelines.
g. Incorporation of anode beds, polarisation cell, surge diverters, test stations, etc., and other relevant features of CP system design in Pipeline alignment sheet and other related drawings
h. Identification of section of pipeline affected by interference, source of interference and details of interference mitigation arrangements provided. various measurement data at all relevant test stations with and without mitigation measures provided.
i. Detailed commissioning report including various measurement data at all test stations, etc.
j. Vendor drawings and catalogues, test certificates
k. Operation and maintenance manual
l. Miscellaneous
   - Equipment inspection and testing procedure
   - Construction, installation procedures
   - Field testing and commissioning procedures
   - Procedure for monitoring of cathodic protection after commissioning
   - Quality control procedures

14.0 INSTRUMENT, TOOLS AND SPARES

14.1 CONTRACTOR shall supply all instruments, tools and tackles necessary for proper operation and maintenance of complete cathodic protection system and associated equipment.

14.2 CONTRACTOR shall provide a list of spares and consumables required for proper operation and maintenance of part of cathodic protection system to be integrated with permanent CP system designed on the basis of permanent CP design parameters and associated equipment, for two years operation of the system.

15.0 INFORMATION REQUIRED WITH THE BID

Refer scope of work/PJS for the information required along with Bid.

-X-X-X-

Rev. : 0
Edition : 4

SPECIFICATION

FOR

PERMANENT CATHODIC PROTECTION SYSTEM

SPECIFICATION NO.: MEC/TS/05/E9/016B

(OIL & GAS SBU)
MECON LIMITED
DELHI 110 092

MECON LIMITED REGD. OFF: RANCHI 834002	STANDARD TECHNICAL SPECIFICATION OIL & GAS SBU, DELHI		
0TITLE	PERMANENT CATHODIC PROTECTION SYSTEM	DOCUMENT NO. MEC/TS/05/E9/016B	Page 1 of 1 REVISION : 0 EDITION : 4

CONTENTS

Sl. No.	Description
1.0	SCOPE
2.0	CODES AND STANDARDS
3.0	SYSTEM IMPLEMENTATION
4.0	CORROSION SURVEY
5.0	CATHODIC PROTECTION DESIGN PARAMETERS
6.0	CATHODIC PROTECTION DESIGN CRITERIA
7.0	SYSTEM DETAILS
8.0	INSTALLATION
9.0	SHOP INSPECTION AND TESTING
10.0	PACKING AND TRANSPORT
11.0	FIELD TESTING AND COMMISSIONING
12.0	INTERFERENCE MITIGATION
13.0	CLOSE INTERVAL POTENTIAL SURVEY
14.0	DRAWINGS AND DOCUMENTS
15.0	INSTRUMENTS, TOOLS AND SPARES
16.0	INFORMATION REQUIRED WITH BID

PREPARED BY:	CHECKED BY:	APPROVED BY:	ISSUE DATE :
(Aashish Moyal)	(Saurabh Singh)	(D.K. Pandey)	March, 2009
PREPARED BY:	CHECKED BY:	APPROVED BY:	ISSUE DATE :
(Padipta Roul)	(Aashis Moyal/ Mukesh Jaiswara)	(Pankaj Srivastava)	June, 2026

MECON LIMITED REGD. OFF: RANCHI 834002	STANDARD TECHNICAL SPECIFICATION OIL & GAS SBU, DELHI		
TITLE	PERMANENT CATHODIC PROTECTION SYSTEM	DOCUMENT NO. MEC/TS/05/E9/016B	Page 1 of 1 REVISION : 0 EDITION : 4

AMENDMENT STATUS

Sl. No.	Clause / Paragraph / Annexure / Exhibit / Drawing Amended	Page No.	Revision	Date	By (Name)	Verified (Name)
1	Revised & re-issued as standard specification (Edition-4)	-	0	June -2026	AM	PS

1.0 SCOPE

1.1 This specification defines the requirements of survey, design, engineering, supply of equipment/ materials, Quality assurance & Quality control (QA & QC), inspection at manufacturer works, installation, testing and commissioning of a permanent impressed current Cathodic Protection System for protection of external surface of underground cross-country pipelines for 35 year design life including supplementing of corrosion survey, close interval potential logging survey, investigations for interaction / interference problems (AC & DC) and mitigation of the same.

This specification provides the basic parameters to develop a suitable permanent impressed current cathodic protection (ICCP) system for the pipeline/ structures requiring protection. All data required in this context shall be taken into consideration to develop an acceptable design and for proper engineering of the system.

Compliance with these specifications and/or approval of any documents submitted by contractor shall in no case relieve the contractor of his contractual obligations of providing interference free PCP system for the pipeline for 35 year of design life or as mentioned in PJS.

1.2 Unless otherwise specified in job specifications for contracts involving survey, complete system design, supply of material / equipment, system installation and commissioning, integration of the permanent impressed current CP system with the temporary CP system (whether provided by a different contractor or included along with permanent CP system) shall be the responsibility of the permanent CP contractor whose scope shall include disconnection of sacrificial anodes before start of PCP commissioning.

This specification includes certain activities which are common with the temporary cathodic protection facilities. In cases where temporary and permanent cathodic protection works are being executed by the same agency, the common activities would be completed as part of temporary cathodic protection system. In cases where temporary and permanent cathodic protection works are being executed by different agencies, the contractual scope of work/ Particular Job specification shall be referred for further details.

1.3 All work to be performed and supplies to be effected as a part of contract shall require specific approval of owner or his authorized representative. Major activities requiring approval shall include but not be limited to the following:-

- Corrosion survey data interpretation report and design basis for CP system.
- CP system design package
- Purchase requisitions for major equipment and vendor approval
- Detailed engineering package
- ITP & Quality Assurance for Factory test and site work
- Installation, Pre-Commissioning Procedure with record formats
- Field testing and commissioning procedure
- Procedures for interference testing and mitigation
- CIPL survey and system monitoring procedures
- Post Commissioning Reports,
- As Built Documentations

2.0 CODES AND STANDARDS

2.1 The system design, performance and materials to be supplied shall, unless otherwise specified, conform to the requirements of the following latest relevant applicable specifications:

1.	ASTM G 57	:	Standard Test Method for Measurement of Soil Resistivity Using the Wenner Four-Electrode Method
2.	NACE Standard SP-0169	:	Standard Practice Control of External Corrosion on Underground or Submerged Metallic Piping Systems.
3.	NACE Standard SP-0177	:	Standard Practice Mitigation of Alternating Current and Lightning Effects on Metallic Structures and Corrosion Control System.
4.	NACE Standard SP-0286	:	Standard Practice the electrical isolation of Cathodically Protected Pipelines.
5.	NACE Standard SP-0572	:	Standard Practice for Design, Installation & Operation of Impressed Current Deep Ground beds
6.	NACE Standard SP-200	:	Standard Practice for Steel Cased Pipeline Crossings
7.	NACE Standard SP-0104	:	The Use of Coupons for Cathodic Protection Monitoring Applications
8.	BS EN 13636	:	Cathodic protection of buried metallic tanks and related piping
9.	IS: 7098 Part I	:	XLPE insulated cables.
10.	IS: 1554 Part I & II	:	PVC Insulated heavy duty electrical cables.
11.	IS: 8062	:	Code of practice for cathodic protection of steel structures
12.	NACE TM 0497	:	Measurement Techniques Related to Criteria for Cathodic Protection on Underground or Submerged Metallic Piping Systems
13.	NACE SP21424	:	Alternating Current Corrosion on Cathodically Protected Pipelines: Risk, assessment, mitigation & monitoring
14.	ISO 15589-1	:	Petroleum, petrochemical and natural gas industries — Cathodic protection of pipeline systems —Part 1: On-land pipelines
15.	ISO 21857	:	Petroleum, petrochemical and natural gas industries — Prevention of corrosion on pipeline systems influenced by stray currents
16.	ISO 22426:2020	:	Coupons **used in cathodic protection (CP)** systems to assess their effectiveness on buried and immersed metallic structures like pipelines
17.	ISO-16440-2016		Petroleum and natural gas industries — Pipeline transportation systems — Design, construction

			and maintenance of steel cased pipelines
18.	OISD 113	:	Classification of Area for electrical installations At Hydrocarbon processing and handling facilities
19.	OISD 141	:	Design and requirement of Cross Country Pipelines
20.	OISD 241	:	Guidelines for Integrity Assessment of Cross Country Pipelines
21.	OISD 188	:	Corrosion Monitoring of Offshore & Onshore
22.	NACE TM0101	:	Measurement techniques related to criteria for cathodic protection
23.	ASTM B418	:	Cast and Wrought Galvanic Zinc Anodes
24.	ASTM B843	:	Magnesium Alloy Anodes for cathodic protection
25.	ASTM G57	:	Field measurement of soil resistivity using wenner four pin electrode method
26.	NACE SP0502	:	Standard Practice Pipeline External Corrosion Direct Assessment Methodology
27.	NACE SP0207	:	Performing Close-Interval Potential Surveys and DC Surface Potential Gradient Surveys on Buried or Submerged Metallic Pipelines
28.	NACE TM0102	:	Measurement of Protective Coating Electrical Conductance on Underground Pipelines
29.	ISO 18086	:	Corrosion of metals and alloys — Determination of AC corrosion — Protection criteria
30.	BS EN 50162 from	:	Protection against corrosion by stray current direct current systems
31.	BS EN 15280	:	Evaluation of AC corrosion likelihood of buried pipelines applicable to cathodically protected pipelines
32.	IS/IEC 60079	:	Electrical apparatus for explosive gas atmospheres – general requirements
33.	IS 3043	:	Code of practice for Earthing
34.	IS 5571	:	Guide for selection of electrical equipment for hazardous Area
35.	IS 5572	:	Classification of hazardous areas (Other than

mines) having flammable gases and vapours for electrical installations.

36. IS/IEC 62305 : Protection Against Lightning
37. IEC 60529 : Degrees of Protection Provided by Enclosures (IP Code)

- PNGRB Guideline for Cross country pipelines
- A.W. PEABODY-Book on control of pipeline corrosion
- Latest IE rules/ CEA rules.

API RP 500 Recommended Practice for Classification of Locations for Electrical Installations at Petroleum Facilities

OISD-STD-137 Inspection of electrical equipment

OISD-STD-141 Cross country liquid hydrocarbon pipeline

PNGRB-G.S.R.
Infra/ T4S/ P&PPL/01 Technical Standards and Specifications including Safety Standards for Petroleum and Petroleum Products Pipelines

2.2 In case of imported equipment standards of the country of origin shall be applicable if these standards are equivalent or stringent than the applicable Indian standards.

2.3 In case Indian standards are not available for any equipment, standards issued by IEC/BS/VDE/IEEE/NEMA or equivalent agency shall be applicable.

2.4 The equipment shall also confirm to the provisions of Indian Electricity rules and other statutory regulations currently in force in the country.

2.5 In case of any contradiction between various referred standards/ specifications/ data sheet and statutory regulations the following order of priority shall govern with no additional time and cost to Owner, stringent of the same shall be followed without any additional time and cost to Owner/PMC.

- Statutory regulations.
- Schedule of rates.
- Design Basis.
- Data sheets.
- Scope of Work/ Job specification.
- Standard Specification.
- Codes and standards.

3.0 SYSTEM IMPLIMENTATION

All work to be performed and supplies to be effected as a part of contract shall require specific approval of owner or his authorised representative. Major activities requiring approval as per design basis but not limited to the following:

a) Various installation procedures & Erection Methodology.

b) Corrosion survey data interpretation report, formats and plot plans for land acquisition.
c) Conceptual system design.
d) Basic engineering package.
e) Purchase requisition for major equipment, and vendor approval, if any.
f) Specification/catalogue/data sheet of bought out items.
g) Detailed engineering package.
h) Detailed design of Anode ground bed, typical lay out drawings for Anode bed connection & installation.
i) QA/QC Plan.
j) Procedure for field testing, pre-commissioning & commissioning.
k) Procedure for AC & DC interference detection & mitigation.
l) Procedure for post commissioning surveys.
m) Monitoring formats for PCP.
n) CPL survey procedure.
o) O&M Manuals.
p) As built documentation.

4.0 CORROSION SURVEY

4.1 General

4.1.1 The details of corrosion survey including soil resistivity, collection of additional data along the right of way and other data required for CP design, if available with owner, shall be included as part of project specification. However, verification of its veracity and adequacy shall be the entire responsibility of the contractor. In addition contractor shall have to generate / collect additional data as specified elsewhere required for completeness of the job.

4.1.2 Soil resistivity measurement shall be carried out by CP contractor at anode ground bed locations using Wenner's 4-pin method by calibrated instruments. Survey instruments shall have maximum AC and DC ground current rejection feature.

Care shall be taken to ensure that the resistivity observations are not influenced by the presence of foreign pipelines/ structures, and earth currents in the vicinity of EHV/HV lines and installations using earth return in their power system etc.

4.2 Soil resistivity survey at impressed current anode ground bed plot

4.2.1 Each selected anode bed plot shall be sub-divided into sub-plots. Sizes of sub-plots shall depend upon the expected depth for soil resistivity investigations. Each of these sub-plots shall be investigated for resistivity data individually. Sufficient observations shall be taken at each of these sub-plots as required and desired by Owner/ Owner's representative to obtain sufficient information about sub- soil stratification and, wherever possible, to establish the depth of water table/ basement. The number of subplots at each ground bed plot may very from six to ten. The exact number of sub-plots etc shall be decided at site in consultation with OWNER/ OWNER's representative.

4.2.2 Number, location, demarcation and size of sub-plots and number of sets of resistivity observations required for each sub-plot shall be individually decided for each ground bed plot location.

4.2.3 Two or more ground bed plots may be required to be selected for soil resistivity survey at proposed anodebed location.

Depth of soil resistivity shall be as per type of anode ground bed.

For shallow type-1.5, 2.5 & 3.5 meter depth

For Deepwell anode bed-10, 15, 20, 25, 30, 35, 40, 45, 50, 100…Meter as per depth of anode ground bed.

4.3 **Topographic Surveys**

Cathodic protection stations consisting of anode ground bed, CP power supply equipment etc. along with all associated cabling upto pipeline and any other related equipment and accessories for CP stations shall be demarcated on the ground. Ground plots so demarcated shall be surveyed for all other topographical and cadastral features and topo-sheets shall be developed by the CONTRACTOR which should be suitable for use in land acquisition etc.

4.4 **Additional data to be collected**

The following data shall be collected to generate design data for evaluation of interaction / interference possibilities due to presence of other services in ROW/ vicinity. Client shall provide assistance for liaison work to the extent possible.

i) Route and types of foreign services / pipeline in and around or crossing the right of way (including those existing and those which are likely to come up during contract execution).
ii) Diameter, wall thickness, pressure, soil cover, and coating scheme used in case of pipelines.
iii) Details of the existing cathodic protection system protecting the services i.e. location, type of protection, anode beds, test station locations and their connection scheme. Present output of current and voltage readings of CP power supply units.
iv) Remedial measures existing on foreign pipeline/ services to prevent interaction.
v) Voltage rating, phases and sheathing details of cables running parallel or crossing the ROU.
vi) Graphical representation of existing structure/ pipe-to-soil potential records, T/R unit current / voltage readings.
vii) Possibility of integration / isolation of CP systems which may involve negotiations with owners of other services.
viii) Information on existing and proposed DC/AC power sources and system using earth return path in the vicinity of the entire pipeline route such as HVDC/ earthing stations/ substations, fabrication yards with electric welding etc.
ix) Crossing and parallel running of electrified and non-electrified traction (along with information regarding operating voltage, AC/DC type etc.) as well as abandoned tracks near ROW having electrical continuity with the tracks in use and the track to soil potential measurement using Cu to CuSo4 half-cell after tracks in use.
x) Crossing or parallel running of any existing or proposed EHV/HV AC/DC overhead power lines along with details of voltage, AC/DC type etc.

xi) Voltage rating, phases, sheathing details of underground power cables along ROW or in its vicinity.

xii) Any other relevant information that may be needed in designing and implementation proper protection scheme for the proposed pipeline.

Unless otherwise mentioned, contractor shall conduct necessary potential gradient surveys for any existing anode ground beds that may interfere with the CP system of the pipelines covered under this project.

4.5 **Report**

After completion of all field work, a report incorporating all the results generated from site surveys and details of additional data collected shall be submitted to the MECON/CLIENT for necessary approval. The report shall also contain detailed interpretation of survey results and resistivity data, probable interference prone areas etc to form a design basis for the PCP system. This report shall also include various drawings prepared in connection with the above work. The soil resistivity values shall be plotted on semi log graph sheets.

5.0 CATHODIC PROTECTION DESIGN PARAMETERS

5.1 Protection current density range:

Type of Coating	**PCP system design Protection current density*@30 deg C at end of life of pipeline**	**PCP system design Protection current density*@30 deg C at start of the of pipeline life**
	Permanent CP (µA/m²)	**Permanent CP (µA/m²)**
3LPE or 3LPP	50	20* (Refer Note -5)
FBE	400	150
Liquid epoxy Coal tar or bituminous coating	800	300

Note -2: - For computerized test station: Interval of data acquisition/storing may be kept for once in every hour. This feature will be helpful for detecting/trouble shooting in case of encountering any interference. However, in normal case, one reading per day is enough.

Note -3: - CPTRU shall be able to handle the full length upto the next CP Station in case of failure in next CP Station. Same shall be consider in Design & Datasheet Notes

Note-4 :- The values given in Table 2 account for the pipelines operating at not more than 30°C temperatures. Where pipeline operating temperatures exceed 30°C a temperature correction factor shall be applied: current density value shall be increased by 25% for each 10°C rise in operating temperature above 30°C.

Note-5 :- *After commissioning of the pipeline, Protective CP current densities shall be measured with respect to the acceptable criteria, if it is found more than provided in the above table contractor shall take necessary action to mitigate the same.

(*) Actual current density to be adopted shall be decided based upon soil and other environmental conditions, proximity of foreign pipelines and structures affecting interference. Where considered necessary for satisfactory protection of pipeline the current density shall be suitably increased by contractor. Where operating temperatures of U/G pipeline is above 30 deg. C, such as CP Stations located near Compressor stations, protection Current Density shall be increased in minimum by 25% for every 10 °C rise in temperature over 30 °C up to a temperature of 60 deg.C.

For all pipeline sections which are having intermediate HDD (Horizontal Directional Drilling) crossings, the nearby CP TRU units should have adequate provision of D.C. output current to cater to the extra protection current demand at the HDD crossings.

5.2	Safety Factor	(S_F)	:	1.3
5.3	Protection Current Density to be considered for Pipeline without Coating in Soil	(I_2)	:	10 mA/m^2
5.4	Service Life	(S_L)	:	35 years
5.5	Type of Anode		:	MMO Coated Titanium Anode/ HiSiCr Fe Anode
5.6	Anode Consumption Rate			0.2 kg/Amp (Max) Year for HiSiCrFe anode 1.0 mg/ Amp (Max) Year for MMO Titanium anode
5.7	Type of Tail Cable		:	PVDF Insulated/ HMWPE Sheathed (**Kynar**)
5.8	Size of Tail Cable		:	10mm^2
5.9	Type of Anode bed		:	Shallow- Horizontal / Vertical or Deepwell
5.10	Shape of Anode for Shallow Bed System		:	Sheet Steel Canistered Anode pre-packaged with petroleum coke breeze
5.11	Shape of Anode for deep well anode bed		:	String Anode or Individual anode as per Scope of work/PJS
5.12	Current Density for Anode			10 Amp/m^2 for HiSiCrfe Anode 100 Amp/m^2 for MMO Titanium anode

5.13	Anode Utilisation Factor	(U_F)	:	0.8 for centrally connected HiSiCrFe anode / MMO Titanium Anode 0.6 for end connected HiSiCrFe anode 0.5 for ribbon anode
5.14	Total Circuit Resistance (Anode to ground resistance, anode & cathode cable resistance for CP System)	(R_C)	:	0.5 - 1.0 ohm (Max.)
5.15	Specific Coating Resistance (Coating resistivity)		:	15,000 ohm-m^2 for normal soil 7,500 ohm-m^2 for marshy area 20,000 ohm-m^2 for high resistivity area
5.16	Steel resistivity		:	2.2 x 10^{-7} ohm-m
5.17	Cathode Polarisation at Drainage Point (Off Potential- w.r.t. Cu/CuSo4)		:	(-) 1.2 V (max.)
5.18	Cathode Polarisation at farthest Point (Off Potential w.r.t. Cu/CuSo4)		:	(-) 0.85V (min)
5.19	Pipeline Natural Potential (w.r.t. Cu/CuSo4)		:	(-) 0.45 V

6.0 CATHODIC PROTECTION DESIGN CRITERIA

6.1 Cathodic Protection Criteria with Cu/Cuso4 type reference cell

Cathodic protection system shall be designed to meet the following criteria:

a) The pipe to soil potential measurements shall be between (-) 850 mV (Off) to (-) 1.18V (OFF) polarized potentials with respect to a copper/ copper sulphate reference electrode. (Measures by multimeter shall be high input impedance of 10 Mega Ohm or more).

b) As such there is no limit for maximum "ON" negative potential; however, in general, it should not be more negative than -1500 mV (Cu/CuSO4). If any special circumstances exist where an “ON” potential of more than -1500 mV (Cu/CuSO4) is required to be applied, then it shall be brought forward for Owner/Consultant approval with proper justification supported by the pipeline coating Manufacturer's recommendations.

6.2 CATHODIC PROTECTION INTEFERENCE CRITERIA

Mitigation measures shall be included whenever the following conditions are exceeded:

A. AC Interference and AC Corrosion -

For Personnel safety –

(i) The AC voltage on the pipeline should be decreased to a target value, which should be less than 15 rms V, measured over 24-hour duration.

For Pipeline Integrity & safety (AC Corrosion)–

Generally, risk of AC corrosion increases with increase in the AC induced voltage on the pipeline, It has been observed that even at low AC voltages (<1V) AC corrosion can occur if the spread resistance/bulk soil resistivity is very low. Following criteria shall be used for AC corrosion on pipeline -

(i) The AC current density over a 24-hour duration should be lower than 30 A/m² on a 1 cm² coupon.
(ii) Maintaining the average cathodic current density over a 24-hour duration to lower than 1 A/m² on a 1 cm² coupon or probe if AC current density is more than 30 A/m².
(iii) Maintaining the ratio between AC current density and DC current density less than 5 over a period of 24 hours.

In case of AC corrosion risk to the pipeline, Induced AC voltage shall be reduced to such level where AC corrosion densities are reduced to the criteria mentioned above.

Soil resistivity surveys shall be carried out at each HT line crossings, AC interference prone area and pipeline risk assessment for AC corrosion likelihood shall be carried out according to the simulated results, soil resistivity surveys and affected areas shall be marked for the future monitoring approach as per EN 15280:2013.

B. DC Interference-

CP systems of adjacent structures can interfere with the protected structure. DC interference can lead to accelerated corrosion of affected structure.

The CONTRACTOR shall investigate possible sources of detrimental DC stray currents and include proposals in the design on how to mitigate the effect of such stray currents on the protected structure.

CONTRACTOR shall carry out a stray current survey after PCP system commissioning.

Foreign/Owner's pipeline crossing/ HVDC Anode bed/ Running parallel/ PCP ground bed near to the pipeline-

A positive or negative potential swing of 50 mill volts and above on the pipeline under this contract shall be considered as sufficient to indicate the presence of an interaction situation (i.e. Interference on the pipeline) requiring investigation and incorporation of mitigation measures by the BIDDER.

7.0 SYSTEM DETAILS

The system shall include the following major equipment / sub-system unless otherwise specified in project specifications but not limited to following:

- CP stations
- TR units/ cathodic protection power supply modules (CPPSM).
- Anode ground beds and anodes.
- Anode lead junction box.
- Test stations.
- Permanent reference cells. (Pure Zn/Cu-CuSO4)
- Electrical resistance probes.
- Solid state polarisation cell/ surge diverter.
- CP system at cased crossing.
- Polarisation coupons for external corrosion monitoring.
- Bonding Stations.
- CTSU (Computerised Test Station Unit)
- Cables & Cable markers.
- Cathode Junction Box.
- Post commissioning surveys
- AC-DC interference study and mitigation

The detailed specification of each system and equipment shall be furnished by the CONTRACTOR. However, certain minimum requirements for the major equipment are highlighted in this document.
All equipment shall be new and procured from approved reputed manufacturers. Equipment offered shall be filed proven. Equipment requiring specialised maintenance or operation shall be avoided as far as possible. Prototype equipment shall not be accepted. Make and construction of all materials shall be subject to owner's approval.

As far as possible, equipment including test stations, anode lead junction boxes etc. shall be located in safe non-hazardous areas. However, equipment to be installed in hazardous areas shall be of flameproof type confirming to IS:2148, IS:5572, IEC:79 & API 500C and suitable for gas groups IIA & IIB and temperature class – T3 (200˚C).

All flame proof equipment/materials manufactured in India should be certified by CMRI or any other recognised testing body & BIS marked.

All imported equipment/materials for hazardous area shall be tested and certified by an independent agency of country of equipment/material origin and shall be approved by the concerned statutory authority in India.

7.1 Cathodic Protection Stations

The number and exact locations of CP stations shall be worked out based on the corrosion survey data collected. In addition, the following guidelines shall be followed for selecting the locations.

i) Number of CP stations and their selected location shall ensure that these remain valid and are adequate for the full design life of the system after considering all foreseeable factors.

ii) As far as possible, the availability of nearby low resistivity areas for location of associated ground beds must be ensured while selecting the locations of CP stations.

iii) As far as possible, locations of intermediate CP stations shall coincide with the locations of SV stations.

The proposed locations of CP stations are detailed in project specifications (PJS). The same shall be verified for adequacy by the contractor and any additional requirements shall be clearly brought out at the bidding stage itself.

7.2 **Transformer Rectifier Unit/ CPPSM**

7.2.1 Cathodic protection transformer rectifier unit (T/R Unit) working on controlled rectification principle shall supply power for cathodic protection system. The T/R unit shall be provided at CP stations where reliable AC power supply is available and specified in project Specification.

The T/R unit shall be field proven. The design, internal component quality, ratings and layout of components shall ensure high MTBF and low MTTR.

The T/R unit shall conform to MECON's specification no MEC/TS/05/E9/082A and T/R unit data sheet.

7.2.2 Cathodic Protection Power supply Module (CPPSM) for supply of power to Cathodic Protection System shall work on DC input power supply & control the output DC supply using power switch mode principle. The CPPSM unit shall be provided at CP stations where reliable DC power supply is available and specified in project Specification.

The CPPSM shall be field proven. The design, internal components, quality, rating & layout of components shall ensure high MTBF & low MTTR.

The CPPSM shall conform to MECON Standard Specification No. MEC/TS/05/E9/082 and CPPSM Data Sheet.

7.3 **Anode Ground Beds and Anodes**

i) Each CP station shall have an independent anode ground bed which may be of shallow or deep well construction depending upon the corrosion data collected by the contractor. Deep well ground beds may also be used in the congested locations where availability of suitable land for spread out ground beds is restricted.

ii) Ground bed shall be located electrically remote from the pipeline. Nearest part of the anode bed shall at least be 100 metres away from the pipeline and foreign pipelines/ structures. The anodes installed in the ground shall be located in perennially moist strata, wherever possible. Horizontal ground beds shall be at right angles to the pipeline, as far as possible.

The location of ground bed shall be checked and ensured for remoteness from the pipeline and other buried foreign pipelines/ structures, building foundations, switchyards, electrical earthing systems etc.

All MMO Anodes to be placed in Petroleum cock breeze in Shallow-Horizontal/Vertical or Deepwell configuration as per design for 35 year of protective life.

iii) Anodes shall be of MMO coated titanium anode or HiSiCrFe anode alongwith tail cable (Factory jointed) of sufficient length for termination upto the junction box without any joint.

MMO coated titanium anodes

MMO coated titanium anodes shall conform to ASTM A518M-86, Gr-III & composition shall be as below:-

MMO coated titanium anodes shall be of pure Ti substrate. The MMO anodes shall be centre connected sealed tubular type & dimensionally stable.

MMO Anode Dimension	-	As per manufacturer's detailed drawings
Weight of Anode	-	Recommended by manufacturer w.r.t. dimension
Max. Recommended Current density	-	100 A/m^2
Service Life	-	35 years
Anode Cable	-	Single MMO Anode–PVDF Insulated/ HMWPE Sheathed **(Kynar Cable)** String MMO Anode – EPR/CSPE
Cable Length	-	As required
Type of Joint	-	Epoxy Splicing
Anode Consumption Rate	-	1 mg/Amp. Yr.
Electrical Resistivity of MMO coating-		6 x 10-5 ohm cms
MMO Coating thickness	-	> 6gms/m2
Coating deposition method	-	Thermal Decomposition
Carbonaceous Backfill	-	Life 35 years
Utilisation Factor	-	0.8 for centre connected 0.9 for end connected

Each anode to cable joint shall be tested for its electrical contact resistance & its value in ohm shall be recorded. All anodes shall be supplied with individual tail cable of suitable length upto the anode junction box.

The GTP (Guaranteed Technical Particulars) of MMO anodes i.e. Current density, consumption rate (max. specified), rated current output, shape, dimension, physical & mechanical property, thickness of coating of noble meta shall be as per manufacturer's specification/data sheet & CONTRACTOR shall submit routine & type test report for the

anodes.

High Silicon Chromium Cast Iron Anode

Anode shall conform to ASTM A518M-86, Gr-III & composition shall be as below:-

Silicon	:	14.2 – 14.75%
Manganese	:	1.5% max.
Carbon	:	0.7 – 1.1%
Chromium	:	3.25 – 5.0%
Copper	:	0.5% max.
Molybdenum	:	0.2% max.
Iron	:	Reminder
Utilisation Factor	-	0.8 for centre connected 0.6 for end connected

iv) The anode shall be hollow type centrally connected or solid type end connected, cable to anode joint shall be reliable and adequate for design life of anode.

v) Sheet steel anode canisters of adequate size shall be provided for each anode of shallow bed type. Anode canisters shall be filled with petroleum coke breeze with a chemical composition as given below:-

- Fixed carbon content by mass : 99% min.
- Ash by mass : 0.5% max.
- Moisture by mass : 0.05% max.
- Bulk density –As per NACE standard
- Particle Size: Ranging 0.1 - 1mm
- Volatile matters by mass : 0.5% max.
- Hydrogen/hydrocarbons -Nil (calcination temperature in excess of 1200 deg C)

Contractor shall furnished Test Certificate including the following for review/Approval:

a) Make of coke breeze
b) Batch no.
c) Chemical composition
d) Bulk density and Real density
e) Particle size analysis
f) Resistivity (ohm-cm)

vi) String anode/ Individual anode shall be used for deepwell ground bed. In case of deep well ground beds calcined fluid petroleum coke breeze with chemical composition as given below shall be provided in the well surrounding the anodes.

- Fixed carbon content by mass : 99% min.
- Ash by mass : 0.5% max.
- Moisture by mass : 0.1% max.
- Volatile matters by mass : 0.5% max.

vii) Each shallow anode bed shall contain anodes with canisters positioned horizontal or vertical in the soil with suitable backfill at minimum depth of 2 meter with respect to horizontal or vertical configuration.

viii) Layout of anode installation in anode bed shall be detailed out in drawings showing anode installation details, anode grouping, anode wiring, anode cable routing etc.

ix) The deepwell anode ground bed details shall include the details of anodes, deepwell casing, anode positioning, anode cable supporting, deepwell gas venting, active, passive portions of ground bed etc.

x) Anodes shall be supplied complete with tail cables which shall be long enough for termination on their associated junction boxes without intermediate joints. Exact lengths and termination details shall be indicated in construction drawings by Contractor.

xi) Anode bed separation from pipeline shall be tested for interference.

xii) Potential gradient around the anode bed shall be within safety requirements and its effective boundary shall be defined and secured.

xiii) In case two parallel pipelines running in the same ROW. The anode ground beds of respective pipelines shall be located on the respective sides of the pipelines.

xiv) The depth of deepwell anode ground bed shall be sufficient enough to reduce anode influence on incidental structures within proposed location.

xv) Manufacturer shall furnish detailed dimensional fabrication drawing of anodes as well as details of cable connection & its insulation sealing to owner for approval. Manufacture of anode will commence only after this Approval from owner.

7.4 **Anode Junction Box**

i) Depending on the size and configuration of anode ground beds, one or more anode junction boxes shall be provided at each ground bed.

All cable tails from individual anodes shall be terminated to these anode junction boxes which shall be further connected to anode cable coming from CP station power source.

ii) Junction boxes shall have sheet steel enclosure of minimum 3 mm thickness and hinged lockable shutters. They shall be weatherproof with degree of protection IP-55. Junction boxes shall have Tined plated Cu anode bus and terminal plate with adequate number of anti-loosening type of identified terminals. Provision shall be made for measurement and control of individual anode current by providing suitable shunt and resistors. Anode disconnecting link shall be provided for each anode circuit. 30% spare terminals shall be provided in each junction box. Anode junction boxes shall be epoxy coated (Both inside & outside surface).

Anodised Al (Aluminium) name plate shall be provided inside the AJB with black background with white letters with following information-

a) AJB number & location
b) Current rating of ground bed
c) Ground-bed resistance during commissioning
d) Ground-bed resistance_ _ _ Ω with Date_ _ _ _ _ _ (Editable)
e) Connection scheme
f) Distance from pipeline
g) Distance from CP station

iii) In case of sectionalized ground beds, an additional common anode disconnecting link for each section of ground bed shall be provided for disconnection of any section of ground bed.

iv) Technical requirements of AJB is specified as below-

a) Output Circuit Config.: Anode Bus output distributed into circuit in line with the number of anodes for current measuring shunt and resistor.
b) Shunt Type: Manganin Alloy
c) Shunt & Resistor Rating: 5A/75mV & 1ohm, 100W
d) Terminal Board Material: Phenolic Bakelite Sheet
e) Insulation Level in between terminals & body: 1.5 KV for 1 minute at 50Hz
f) Busbar: Tinned Copper Bus Bar 25mm x 5mm minimum
g) Input & Output Terminals: Stainless Steel Stud with double nut and washer
h) Enclosure: Completely enclosed, Outdoor type, pole mounted, Natural Air Cooled, IP-55, The enclosure is provided with two terminals for earthing.
i) The enclosure is made of sheet steel with min 3 mm sheet thickness provided with Neoprene sealing gasket. The shutter and external fitted nut / bolts are SS
j) Cable entries: Cable entries are sealed through proper visco-elastic sealent to prevent entry of moisture.
k) Painting: Two coats of Epoxy Paint / Powder Coating

7.5 Cathode Junction Box

One cathode junction box shall be provided at each CP Station for Permanent Pipe to soil potential measurement circuit & cathode connection. Junction boxes shall have sheet steel enclosure of minimum 3 mm thickness and hinged lockable shutters & Allen key locks. They shall be weatherproof with degree of protection IP-55. Junction boxes shall have cathode bus and terminal plate with adequate number of anti-loosening type of identified terminals. Cathode junction boxes shall be epoxy coated (Both inside & outside surface).

The negative of the CP power supply source shall be connected to the incoming circuit of the cathode junction box. The junction box shall have separate out going circuit one for each pipeline to collect the negative drainage currents from each of the parallel pipelines.

The incoming circuit shall have a current measurement facility. Each out going circuits shall have provision for measurement and control of current.

Anodised Al (Aluminium) name plate shall be provided inside the CJB with black background with white letters with information same as test station (TLP) Cl. No. 7.6.(vi) except test station no.

i) Technical requirements of CJB is specified as below-

a) Output Circuit Config.: Cathode Bus output distributed into 2 + 1 circuits in line with current measuring shunt. The reference electrode are terminated & further extended to CPTRU.
b) Shunt Type: Manganin Alloy
c) Shunt & Resistor Rating: 10A/100mV
d) Terminal Board Material: Phenolic Bakelite Sheet
e) Insulation Level in between terminals & body: 1.5 KV for 1 minute at 50Hz
f) Busbar: Tinned Copper Bus Bar 25mm x 5mm
g) Input & Output Terminals: Stainless Steel Stud with double nut and washer
h) Enclosure: Completely enclosed, Outdoor type, pole mounted, Natural Air Cooled, IP-55, The enclosure is provided with two terminals for earthing. The enclosure is made of sheet steel with min 3 mm sheet thickness provided with Neoprene sealing gasket. The shutter and external fitted nut / bolts are SS
i) Cable entries: Cable entries are sealed through proper visco-elastic sealant to prevent entry of moisture.
j) Painting: Two coats of Epoxy Paint / Powder Coating

AJB & CJB shall be full welded, joint welded AJB & CJB shall not be acceptable.

Junction boxes shall have adequate number [with 30% extra] connectors on the connecting board inside. Cable entries through corresponding bottom glands or hub of appropriate matching size. All junction Boxes [JB] shall be IP-55 enclosure rating. In case, the junction boxes, are required to be installed in hazardous area, flame proof junction boxes are to be used. All the cable / lead wire entry to Flame Proof Anode Junction box shall be through double compression weather proof & flameproof type cable glands. All JBs are to be erected as per the approved drawings.

7.6 **Test Stations**

Test stations shall be provided In addition to locations mentioned in the TCP specification at following locations: -

a) At Interference prone area (AC & DC) detected during the interference study for mitigation measures.
b) At EHT/HT AC/DC overhead line crossings selected locations where EHT/HT overhead is in the vicinity of the pipeline (Not considered in the TCP).
c) In the vicinity of DC network or grounding systems where interference problems are suspected.
d) At any other locations considered necessary by OWNER/ OWNER'S representative/MECON.
e) At locations of CTSU, reference cells, AC corrosion coupons, pipeline grounding through polarization cells etc

i) Installation of TCP system may be in the scope of pipeline laying contractor (not in the scope of PCP contractor), TLP installed during TCP shall be utilized if there is no inadequacy. New TLP is required to be installed during PCP, if TLP installed during TCP damaged or

inadequate or existing TLP is not located at the designed location during PCP.

ii) All test stations shall be provided with shunt & resistors.

iii) Bond stations shall be provided at required locations with shunt and resistor as a means to monitor and control current flow between the pipeline and foreign pipelines / structures / electrified railway tracks etc that crosses and runs parallel to the pipeline in common ROW or within 25 metre from the pipeline.

iv) All test stations shall have weatherproof enclosure, with hinged lockable shutter with two Allen key locks and degree of protection IP-55 with epoxy coating (Inside & outside surface). Enclosure shall be made of sheet steel of at least 3 mm thickness and shall be suitable for MS post mounting. The test station shall be suitable for design life of CP system.

v) Test station shall be installed with the face of the test station facing the pipeline. The nameplate of test stations shall carry the following minimum information:

- Test station number
- Chainage in Km.
- Test station connection scheme
- Distance from pipeline in mtrs.
- Direction of product flow.

vi) Number of terminals and different schemes of wiring shall be as per the test station connection scheme sketch. Minimum twenty percent (20%) spare terminals shall be provided in each test station.

vii) Test station for EHT/HT line crossing shall be installed approx. 100-500 m away from the EHT/HT line.

viii) The location of all the test station shall be marked with their connection scheme and other relevant information on alignment sheets. A detailed test- station schedules shall be prepared.

7.7 **Permanent Reference Cells**

i) Zn reference cell

The Zinc [Zn] alloy anode shall conform to ASTM B 418 standard. The anode (other than ribbon anode) shall be packaged with special back fill. The metallurgical composition of anode, potential and consumption rate shall be as below:

Aluminium: 0.3 – 0.5% max.
Cadmium: 0.075-0.1% max.
Copper: 0.005% max.
Iron: 0.002% max.
Silicon: 0.005% max.
Lead: 0.005% max.
Zinc: Remainder

Anode open circuit potential: (-) 1.1 volts w.r.t. CSE
Anode consumption rate: 11.24 kg / (A yr) Max.

CONTRACTOR shall furnish spectrographic analysis from each heat both for Zinc (Zn) and Magnesium (Mg) anodes along with electrochemical test results. CONTRACTOR shall mention specifically the method of Spectrograph (Atomic Absorption/Emission Spectrometry/Photometrics) for CONSULTANT/PURCHASER Approval.

ii) High purity copper / copper sulphate reference cells with proven high reliability shall be provided for stable pipe to soil potential measurement reference at CP stations and at computerized test station unit (CTSU) locations along ROW.

iii) Three numbers reference electrodes shall be installed at each cathodic protection station location.

iv) The reference cell for high resistivity areas shall be suitable for the prevailing dry soil conditions to give maximum service life.

v) Permanent reference cells shall be installed with backfill material.

vi) Silver/ Silver Chloride reference cells in place of copper / copper sulphate cells shall be provided at marshy area locations where water table is high and sub-soil water or soil shows chlorine concentration more than 300 PPM.

vii) The cable from reference cells shall be provided upto CP power source at CP stations. The cable shall be routed through cathode junction box near pipeline.

viii) Reference cell access points shall be provided near insulating joint locations and at SV stations, where the ground is paved, for measurement of pipe to soil potentials. A perforated PVC pipe filled with native soil and buried at the location shall be provided for the purpose. The length of the PVC pipe shall be adequate to reach the native soil below the paving.

ix) The life of reference cell shall be minimum 10 years under installed condition.

7.8 **Electrical Resistance Probe/Coupons**

ER Probes-

Where specified in project specifications (PJS)/ Scope of work/Data sheet, electrical resistance probes utilising the electrical resistance technique shall be provided along the pipeline at marshy areas and at vulnerable locations to monitor the external corrosion activity on the pipeline. The lead wires of the probe shall be connected to pipeline and terminated inside test station enabling periodic resistance measurement with the probe using a portable measuring instrument.

The material of the E/R probe element shall be of the same alloy as of the pipeline material.

The E/R probes shall be provided preferably at the bottom portion of pipeline. The locations of E/R probes shall be got approved.

Portable E/R probe reading instrument shall be supplied by contractor.

For Internal corrosion monitoring ER probes & Coupons shall be provided if specified in Scope of work/PJS/Data sheet as per specification of CMS (Corrosion monitoring system).

Polarisation Coupons-

Where specified in project specifications (PJS)/ Datasheet polarisation coupons of pipeline material shall be provided along the pipeline to monitor the CP system performance. Coupons shall be installed at CP station, at marshy areas, at vulnerable locations, at foreign pipeline crossings, Interference prone areas & location deemed necessary by Owner/Owner's representative.

The location & the number of coupons to be provided along the pipeline get approved from owner.

The coupons shall be same as the pipeline material & having 10mmx10mm/ 25mmx25mm uncoated exposed area to the soil. Two cables one connection for pipeline & other for potential measurement shall be provided with each coupon. Reed-Switch shall be connected to the protection cable to measure the coupon "OFF" potential.

One face of the coupon that corresponds to the internal surface of the pipe will be having pipeline coating. The cable to coupon connection shall be sealed with epoxy for encapsulation. The coupon shall be installed at bottom 1/3rd portion of the pipeline and approx. 300mm away from the pipe surface where an artificial coating defect of 1cm2 is created and exposed to soil. Two cables one for connection to pipeline for protection and other for potential measurement shall be provided for each coupon.

A permanent reference shall be provided at the location of Coupon to enable the measurement of PSP.

AC Corrosion Coupons-

AC corrosion coupons shall be installed at the locations of HT line crossings where high induced potential is recorded on the pipeline. The location of AC corrosion coupons shall be decided after AC interference study.

Wherever the pipeline is either crossing or running parallel with overhead EHV/HV transmission lines of voltage grade 33kV and above, AC interference mitigation study to be performed and accordingly AC corrosion coupons and other equipment shall be decided.
AC Corrosion Coupons are accurately sized to provide the ability to measure maximum AC current discharge from a pipeline in areas subject to interaction from overhead AC power transmission systems. The value so recorded provides a vital indication as to whether AC corrosion could be occurring on the pipeline.

The coupon consists of a steel disc with an exposed area of 1cm², fitted into thick PVC housing to give an impression of a holiday. The purpose of the AC corrosion coupon is to identify the corrosion current density, which will help in classifying the intensity of corrosion.

The connection between the coupon and the cable is properly encapsulated to stop the ingress of moisture.

7.9 **Polarisation Cell (Solid state type)**

Polarization cell shall have following specification for the mitigation of High induced voltage, technical requirement of the polarization cell is given below, which may change as per the AC interference simulation report -

(a) Polarisation cell

-Type	:	Solid state (Min. 5 kA @ 30 Cycle) or as per scope of work/PJS
-Steady state discharge Current Rating	:	50A @ 50Hz
-Blocking Voltage	:	+/- 2V DC
-Lightning Current	:	100kA (8/20 uS, as per IEC 62305)

- AC voltage under maximum rated AC fault current Less than 10 V peak to peak.

i) Polarisation cell system shall be adequately sized and suitable for the design life of permanent CP system. The directly buried zinc or zinc ribbon anodes shall also be adequately sized for the life of the permanent CP system, taking into consideration discharge from the anodes. The grounding system shall have minimum resistance to earth to restrict the pipeline voltage as per NACE Criteria but shall not exceed 1 ohm.

ii) Motor operated valves where located on the cathodically protected portion of the pipeline shall be grounded by Polarization cell & zinc anode (2 nos x 10 kg). The MOV power supply cable armour shall be insulated (by cutting and taping with insulation tape) at MOV end to avoid armour carrying CP current.

7.10 **Computerized Test Stations**

Where specified in the project specification/ data sheet computerized test station shall be provided along the ROW of the pipeline for automatically monitoring and recording the pipe to soil potential, pipe current, etc of the pipeline, casing pipeline and foreign pipelines, etc, as required. The CTSU data logger with in the test station shall measure and record these parameters regularly at programmed intervals. The computers shall have required number of input ports for measurement of potentials and current as applicable at the location of its installation. Computers shall have real time clock and record the time of data measurement. Each computer shall have an identification number incorporated in its software, which shall be clearly indicated along with the data display/ print out.

The computers shall be programmed to collect and store all the field parameters at intervals as specified in the project specification/ data sheet.

Computerized test station unit (CTSU) shall have the following feature:

The Input channels of Data Logger should have full protection against high voltage surges and continuous over voltages of up to 500V AC & DC.

The CTSU logger should have also built-In GSM Modem for broadcasting data to the Central Station at the programmed periodic interval. The Data is to be transmitted in the form of SMS. Data should be transmitted to central monitoring station & an additional mobile phone. Both the data transmission mobile nos. Should be easily programmable as desired by the user.

The CTSU data logger should have built-in non volatile memory for local storage of Data. It is possible to store about 125,000 data readings for each channel i.e. a total half million readings for all four channels in the Local memory of the data logger. Locally stored data should be retained up to 5 years without any external power. The locally store data could be downloaded on a field reader using the USB communication port provided on Data Logger. The Data Logger will be supplied with Data downloading software. The logger software should download the Data in standard MS Excel sheet and generate tabulated reports and graphs.

The Periodic Data Logging at min. 1 data sample per minute & SMS broadcast interval will be programmable from 1 data sample per 15 minutes to 1 data sample in 24 Hours.

The CTSU Data Logger should have a 2 Line 16 x 2 mm LCD display for entering local settings and viewing TS parameters locally. Following Local settings to be done using a laptop:

Setting date/ time
Setting start time for periodic sending of data to the central station & additional mobile no.
Setting periodic logging Interval
Entering different mobile numbers for data transmission.
Setting field ID of the Data Logger.

The LCD Display will also display the following Parameters
DC Reference Potential (PSP)
AC Reference Potential (AC PSP)
Pipeline Current
GSM Signal Strength
GSM SIM registration status

The Data Logger unit will have a precise and accurate Real Time Clock (RTC) for exact time stamping of data.

The CTSU Data Logger should be a battery-operated device operating on built-in Internal rechargeable Lithium-ion Battery. The CTSU Data Logger will be capable of functioning for about One Year at the logging & data broadcast rate of one SMS per day on the Internal Battery, without any need of changing/re-charging the battery. A Discharged battery should be fully recharged in 2 hours by means of the rapid charger to be supplied with the CTSU.

The CTSU Data Logger unit should be housed in a compact & sturdy non corroding enclosure.

a) Overall dimensions: 130mm x 130mm x 75mm (Approx)
b) Mounting: Wall mounting inside C.P. Test Station
c) Cable Entry: From Bottom
d) The above indicated Enclosure Size is including the Internal Battery. The CTSU to be installed inside a suitable Test Station to provide IP 55 degree.
e) Operating Temperature: 0 degree C to 50 degree C
f) Humidity: 99% (RH)
g) Simultaneous recording of 5 Nos. analogue channels.

CH-1: -4V to +4V DC (for DC PSP)
CH-2: 0V to 50 V AC (for PSP AC Interference Monitoring)
CH-3: 0A to 100 A DC (for Pipeline Current Monitoring)
CH-5: 0A to 1000mA AC Current Monitoring/ Current density
CH-4: Battery Level (for Internal Battery Status Monitoring)
The typical accuracy of each channel is + 1.0% of F.S. + 1 digit

h) Shall be able to generate +ve & -ve sign for recorded PSP values.
i) Portable Laptop readers (14” display, Intel Core i5, 8GB RAM, 512 GB SSD with windows11 & one year warranty) shall be supplied with CTSU for Field downloading of Data (Qty as per scope of work).
j) The CTSU shall provide Battery Low alarm.

7.11 **Painting**

The sheet steel used for fabrication shall be thoroughly cleaned and degreased to remove mill scale, rust, grease and dirt. Fabricated structures shall be pickled and then rinsed to remove any trace of acid. The under surface shall be prepared by applying a coat of phosphate paint and a coat of yellow zinc chromate primer. The under surface shall be free from all imperfections before undertaking the finishing coat.

After preparation of the under surface, spray painting with two coats of final paint shall be done. The finished panels shall be dried in ovens in dust free atmosphere. Panel finish shall be free from imperfections like pinholes, orange peels, runoff paint etc. Bidder shall furnish detailed painting procedure alongwith bids.

All unpainted steel parts shall be cadmium plated to prevent rust formation.

7.12 **Cables**

i) MMO Anode tail/lead cable (Size 1Cx10 Sqmm)-

Anode tail/lead cable shall be 1Cx10 Sqmm size, annealed high conductivity tinned stranded copper conductor (7 Strands), PVDF insulated (Thickness 0.040 Inch), HMWPE sheathed/Jacket (Thickness 0.065 Inch), un-armoured.

ii) Anode & Cathode Header Cable- (Size 1Cx35 Sqmm)-

Anode & Cathode Header Cable shall be min 1Cx35 Sqmm size, annealed high conductivity tinned stranded copper conductor, XLPE insulated, PVC sheathed, FRLS, 1.1kV Grade armoured cable as per IS: 7098.

iii) TR/CPPSM Input Power Supply Cable - (Size 3Cx10 Sqmm)-
TR/CPPSM Input Power Supply Cable shall be 3Cx10 Sqmm size, annealed high conductivity tinned stranded copper conductor, XLPE insulated, PVC sheathed, FRLS, 1.1kV Grade armoured cable as per IS: 7098 for Single Phase TR Units and 4 core type for 3 phase TR units.

iv) Measurement cable & Permanent Reference cell tail cable- (Size 1Cx6 Sqmm)-

k) **Measurement cable & Permanent Ref cell tail cable from Pipe/Tank/Buller/Vessel to CJB & CJB to TR/CPPSM Unit** shall be 1Cx6 Sqmm size, annealed high conductivity tinned stranded copper conductor, XLPE insulated, PVC sheathed, FRLS, 1.1kV Grade armoured, screened cable as per IS: 7098.

l) The size of cable for bonding, polarization cell, grounding anodes and surge diverter connections shall be suitable for the maximum fault current subject to minimum (Size 1Cx25 sq mm).

v) The colour of outer sheath of the cables shall be as per the PJS/Scope of work/Design Basis and outer sheath should have marking of "**CP system Cable**" in each one meter interval by black colour for identification purpose.

vi) The cables for connecting various transducers from TR unit/ CPPSM to telemetry interface junction box shall be twisted pair with individual pair shielded and overall shielded with aluminium backed by mylar/polyster tape, PVC sheathed, armoured, PVC over all sheathed type.

7.13 Panel Cabling and cable glands

Adequate space shall be provided inside the panel for termination of cables. Termination shall be performed using crimped lugs. Tags with cable numbers engraved on it shall be attached to each cable at both ends. Cable glands shall be double compression type of Nickel/ Chromium plated brass. The lugs shall be of tinned copper. Phases of AC power cables shall be identified with red, yellow, blue PVC adhesive material.

The armour of the cables from pipeline to CP station (potential measurement, reference cell & drainage cables etc.), CP station to ground bed (anode cable) and test station to pipeline shall be earthed only at one end of the cable to avoid armour carrying CP current.

8.0 INSTALLATION

8.1 Cable Laying

i) Cables shall be laid in accordance with approved layout drawings to be prepared by the contractor. No straight through joint shall be permitted in a single run of cable. Cable route shall be carefully measured and cables cut to required length. Enough slackness in cable

shall be provided near anodes, AJB, test stations, pipelines etc to account for any settling.

ii) All cables inside station/plant area shall be laid at a depth of 1.0 mtr. Cables outside station/plant area shall be laid at a depth of 1.5m. Cables shall be laid in sand under brick cover and back filled with normal soil. Outside station & inside plant area, the routes shall be marked with polyethylene cable warning mats placed at a depth of 0.9 mtr. from the finished grade.

iii) In case of above ground cable installations, all un-armoured CP cables shall be laid in GI conduits of sufficiently large size (up to accessible height for protecting against the mechanical damage.).

iv) All underground unarmoured cables shall run through PE sleeves. Distant measurement cables and permanent reference cell cables routed along the pipeline shall be carried at the top of the carrier pipe by securely strapping it with adhesive tape or equivalent as required.

v) RCC or GI pipes of proper size shall be provided for all underground cables for road crossings.

vi) Cables shall be neatly arranged in trenches in such a manner that criss-crossing is avoided and final take-off to equipment is facilitated.

vii) Cable marker & tags (at both end) shall be provided to mark the cable route. Inside plant area cable routes shall be marked by means of cable markers located at maximum intervals of 30M and at locations of changes in direction of cable route.

viii) Cable crossing with Underground pipeline, All cables shall be placed above underground pipeline (Below underground pipeline is not permitted).

ix) Cables shall be tested at site after laying - Continuity check, Insulation resistance values between each core & earth, between cores. All cables shall be tested by 500 V megger.

8.2 **Cable to pipe connections**

All cable connections to the pipeline including charged foreign pipelines shall be made by an approved (by owner) exothermic process. A suitable water proof sealing system of the cable connections shall be made which will be compatible with parent coating system of the pipeline after exothermic process. The resistance of cable to pipe at pin brazing/ thermit weld connection point shall not exceed 0.1 ohm.

For charged pipeline, pin-brazing shall be used. Eutectic solder shall not be accepted for charged or non-charged pipeline. Pipe coating shall be repaired after connection of cable to pipeline. The coating repair material shall be compatible with original coating and shall prevent ingress of water along cable surface and at the interface of coating repair with original pipe coating.

Pin Brazing shall be as per ISO 15589-1 & ISO 13847.

The Pin Brazing to have the following characteristics:

Extremely low Contact Resistance: ≤ 0.1 Ω.
Life: 35 Years
Low transition resistance: 7.5 to 14 μΩ per brazed joint
High mechanical strength Binding strength: 490 N/mm2
Shear Strength: 245 N/mm2
Brazing Temperature: 6500 C
Time per Braze: 2 Seconds
Weather Effect: Suitable for all weather operation

And cable to pipe resistance and mechanical strength (hammer test) shall be performed at all the pin brazing connections

8.3 **Ground bed fencing**

Chain link fencing shall be provided around each ground bed & AJB location as per job requirements/PJS.

8.4 **Civil Works**

All civil works as per enclosed specifications associated with the complete cathodic protection system are included in scope of contractor. This shall include providing cable trenches and foundations for all equipment, outdoor T/R units, anode lead junction boxes, all test stations, polarisation cells, etc.

9.0 SHOP INSPECTION AND TESTING

i) Owner/ Owner's representative shall visit the works during manufacture of various equipment to assess the progress of work as well as to ascertain that only quality raw materials & fabrication technology are used. All necessary assistance shall be provided by contractor and vendors during such inspections.

ii) The minimum testing, inspection requirements for all components/equipment shall conform to requirement as defined in the relevant codes and standards. Detailed inspection and testing procedures alongwith the acceptance criteria shall be prepared by contractor for Owner's approval.

iii) Test certificates including test records, performance curves etc. shall be furnished with sufficient information to identify the equipment to which the certificate referes and must carry project title, owner's name and purchase order details etc.

iv) Owner reserves the right to ask for inspection of all or any item under the contract and witness all tests and carryout inspection or authorise his representative to witness tests and carryout inspection. Contractor shall notify the Owner/ Owner's representative atleast 20 days in advance giving exact details of tests, dates and addresses of locations where the tests would be carried out.

v) PCP system material/ equipment shall be tested by TPI/MECON/Owner as per the inspection category plan & QAP. Inspection by TPI shall be arrange by contractor no additional cost, Cost of TPI for inspection of PCP material shall be borne contractor. Selection of TPI shall be as per the list attached with this tender.

10.0 PACKING AND TRANSPORT

All equipment/material shall be protected for inland/marine, transport, carriage at site and outdoor storage during transit and at site. All packages shall be clearly, legibly and durably marked with uniform block letters giving the relevant equipment / material details. Each package shall contain a packing list in a water proof envelope with one set of final drawings. Copies of the packing list, in triplicate, shall be forwarded to owner prior to despatch. All items of material shall be clearly marked for easy identification against the packing list.

The equipment may be stored outdoors for long periods before installation. The packing shall be completely suitable for outdoor storage in areas with heavy rains and high ambient temperature unless otherwise agreed.

All equipment/material shall be wrapped in polythene sheets before being placed in crates/ cases to prevent damage to finish the crates/ cases shall have skid bottoms for handling. Special notations such as 'Fragile', 'This side up', 'Centre of gravity', 'Weight', 'Client's particulars', 'PO no., Name, Project, contractor, supplier name' etc shall be clearly and indelibly marked on the packages together with other details as per purchase order.

11.0 FIELD TESTING AND COMMISSIONING

11.1 System Testing at Site

The contractor shall furnish the detailed field testing and commissioning procedures for approval. Field tests as per these approved procedures shall be carried out on the equipment/systems before these are put into service. Acceptance of the complete installation shall be contingent upon inspection and test results. Field testing shall include but not be limited to the following.

i) Contractor shall carryout pre-commissioning operation after completion of installation of the system including all pre-commissioning checks, setting of all equipment, control and protective devices. All site tests, reliability and performances tests shall be carried out by contractor in direction of equipment supplier.

ii) Before the electrical & CP facilities are put into operation, necessary tests shall be carried out to establish that all equipment, devices, wiring and connection have been correctly installed, connected and are in good working condition as required for the intended operation.

iii) Owner/ Owner's representative may witness all tests. At least one week's notice shall be given before commencing the tests.

iv) All tools, equipment and instruments required for testing shall be provided by contractor.

v) Generally, the following minimum tests must be carried out and recorded in proformas given in subsequent clauses:

Checking : Visual inspection, comparison with drawings and specifications

Inspection : Detailed physical inspection, if necessary, by taking apart the component parts

Testing : Simulation tests of equipment to determine its operational fitness

a) Cables

- Cable no.
- Voltage grade.
- Conductor cross section
- Continuity check
- Voltage test
- Insulation resistance values between each core & earth, between cores.
- All cables shall be tested by 500V megger.

b) E/R Probe

- Location / Identification number
- Checking of wiring as per schematics
- Resistance reading of probe
- Location of installed probe

c) Polarisation coupons

- Location
- Exposed area/size of coupon
- Coupon to soil “ON” & “OFF” potential
- Type of reference cell
- Magnetic reed switch rating & its operation with magnet
- Wiring, Depth and distance from pipeline of coupon and reference cell shall be as per drawing

d) Reference Cell

- Location
- Potential reading
- Type of cell
- Installed Location

e) Insulating Joint

- Insulation resistance across the joint shall be checked before and after charging the pipeline by means of insulating joint tester. Pipe to soil potential of both protected and non-protected sides of the insulating joint shall be checked before and after energisation of CP system.

Healthiness of the insulating joints

Healthiness of the insulating joints provided on the pipeline shall be checked by measuring the pipe to soil potentials on both protected and non protected sides of the IJs prior PCP commissioning & maintenance and monitoring of PCP system. (By Taking ON-OFF PSP values on both side of IJ)

f) Surge Diverter

- Location / identification number
- Rating
- Check for healthiness

g) Polarisation Cell

- Location / Identification number
- Rating
- Check for electrolyte
- Check for wiring
- Check standby current drain after CP system energisation. (Current drain with respect to voltage across the cell shall be recorded).
- Details of grounding provided for the polarisation cell.

h) Anode Ground Bed

- Location / Station
- Check for actual layout and compliance with drawings
- Resistance of each individual anode
- Current dissipation by each individual anode with respect to anode voltage
- Total resistance of complete anode bed
- Mutual interference
-

i) Grounding Cell

- Location
- Type / no. of anodes
- Ratings

j) CTSU (Computerised test station unit)

- Location / Identification number
- Check for wiring
- Checking programmed interval for collection of the field data by the computer
- Type of reference cell

11.2 **CP Commissioning Procedure**

A model commissioning procedure for a 3 station CP system of a pipeline is given below for general guidance. Contractor shall develop detailed commissioning procedure as per this guideline and get it approved before commencing CP system commissioning activities.

i) On completion of installation of anode beds and other systems as envisaged in this specification, they shall be individually checked, tested and compared against the agreed specifications and procedure.

ii) The CP commissioning shall be carried out with current interrupter provided in the output of the TR/ CPPSM Unit to measure CP "ON" & "OFF" potentials.

iii) Current dissipated by each anode shall be corrected through anode lead junction box.

iv) Electrical continuity of the entire pipeline shall be verified in conformity with design.

v) Input resistance of the pipeline at all the drainage points shall be checked and recorded.

vi) All current measuring test stations shall be calibrated and recorded using portable battery, variable resistance, voltmeters, ammeters, etc. as required.

vii) Temporary protection facilities provided (if any) which do not form part of permanent CP shall be disconnected from the system & removed unless agreed otherwise.

viii) Anodes provided for grounding at the MOVs on cathodically protected portion of the pipeline shall be disconnected. Sacrificial anode, where provided for the protection of the casing pipe at cased crossing shall be disconnected.

ix) The pipeline shall be allowed to depolarize for at least 72 hours after switching 'off' the protection (if any) of all other pipelines in the common ROW.

x) Before the pipeline are put on charge by switching 'ON' any of the CP stations, natural structure-to-electrolyte potential (PSP), Casing pipe to soil & coupon to soil values at all the test stations of the system shall be measured with respect to Copper/ Copper Sulphate half cell.

xi) CP station no. 1 shall be energised so as to achieve a maximum pipe soil potential (PSP) as specified at the test station nearest to the drainage point, and observations on either spread of protected portion of pipeline under this CP station and coupons (coupon to soil potential at the locations of the coupon installations) shall be taken for PSP values (Both "ON" & "OFF" values) at each installed test station. Pipeline current values across the cross section of the pipeline shall also be determined at all the intended test stations influenced by this station.

xii) The typical switching cycle of current interrupter shall be 4 seconds 'ON' and 1 second 'OFF'.

xiii) CP station no. 1 shall now be switched "OFF'' and CP station no. 3 shall be switched "ON" and measurement procedure as adopted in above step (at cl. xi) shall be repeated.

xiv) In case of more than three CP stations in a continuous pipeline section (IJ-IJ), alternate CP stations shall be switched ON and above step (at cl. xi) shall be repeated.

xv) Reach of protection (Km) shall be taken during the commission with individual CP station charging current to the Pipeline, and a graphical presentation shall be made to show the overlapping region of protection.

xvi) All the CP stations of the system shall be switched "OFF" and the pipelines shall be allowed to depolarize. All the three CP stations (CP stations on the continuous section IJ-to-IJ) in the system shall then be simultaneously switched "ON" and PSP values at the drainage points of pipeline shall be brought to a value of maximum PSP (ON PSP, as derived from the individual CP stations commissioning) as specified, and a complete set of PSP observations shall be taken.

Another complete set of PSP observations (ON-OFF) shall be taken after lines have stayed on charge for 48 hours. If there are appreciable differences in these observations as compared to those of earlier set, a third set of observations (ON-OFF) shall be taken after 72 hrs. Maximum drainage point protective potentials shall not be allowed to go beyond the maximum PSP values as specified, in any case.

The output of all CP stations shall then be so adjusted that the sites of occurrence of least negative protective potentials are not less negative than (-) 0.85V "OFF" or not more negative than (-) 1.20V "OFF". A full set of observations shall again be taken 72 hrs after the adjustment of potentials and the protection system shall be left in this state of operation.

xvii) Care shall be exercised to ensure that power supply remains uninterrupted during the period of commissioning. In case of an interruption, the test in progress shall be repeated after allowing time for polarization. More sets of observations may be advised to be taken by the Owner/ Owner's representative in any of the above-mentioned steps.

xviii) PSP values at each of the test stations of the existing pipelines shall be measured and plotted where existing pipelines run in parallel to the new pipeline and mutual interference situations between the pipelines shall be identified and necessary mitigation shall be carried out. Interference situations shall also be identified and mitigated by comparing different sets of readings taken at same test stations at different intervals of time under identical conditions where positive potential swing exceed 50 mV.

xix) The zinc anodes for grounding of MOVs at the locations of MOVs on cathodically protected portion of the pipeline shall be reconnected to the MOVs.

xx) At cased crossings where casing is protected, sacrificial anodes provided for the casing shall be connected to the casing pipe. The casing to soil potential and anode output current shall be measured and recorded. Where casing pipe protection is inadequate or the output current of the anode is more than the designed current, then additional anodes shall be provided as required.

xxi) Current readings at all the current measuring test stations shall be measured and recorded.

xxii) Where computerized test stations are provided the computer shall be initialized/ started to collect and store the field data of potentials, current readings, etc as programmed.

xxiii) After one month of starting the computer to collect the field data, the data stored by the computers at all the computerized test stations shall be retrieved/ down loaded using the field data-retrieving computer. The data shall be analysed with the help of a station main computer.

xxiv) At the locations of the Electrical resistance probe installations the resistance readings of the probes shall be measured using probe reader.

xxv) Final records of testing and commissioning including graphical representation of final structure to electrolyte potential readings shall be compiled with interpretation in consultation with owner/ owner's representative and submitted.

xxvi) As a result of these tests, if any deficiencies are found in the system, the same shall be rectified by the contractor at no extra cost or time effect, to the complete satisfaction of Owner/ Owner's representative. Such deficiencies shall include mitigation of interference problems that may be found existing in the course of testing and commissioning. A set of PSP observations shall also be taken during the peak of the first dry season after commissioning the system into regular operation. Any deficiency found in the protection of the pipeline shall have to be rectified by the contractor at his own cost.

xxvii) If it is found during commissioning that the sites of occurrence of least negative protective potentials are less negative than (-) 0.95 V off & more negative than (-) 1.20 V off even after 72 hrs of operation, then the drainage point potentials shall be adjusted depending upon anode ground bed currents in consolation with Owner/ Owner's representative In any case, the drainage point protective 'ON' & 'OFF' potential shall not exceed the PSP values specified in Cl.No. 6.0 & 7.0 of this document, at any location of pipeline.

xxviii) The reference cell shall be calibrated minimum once in 24 hours during the commissioning.

xxix) The current dissipated by individual anodes shall be measured from the anode lead junction box and corrected for equal dissipation to the extent possible keeping the total ground bed current same.

xxx) After connecting all anode gorundbeds to pipeline PSP shall be taken at each test station locations to ensure the protection criteria.

12.0 INTERFERENCE MITIGATION

i) Investigation shall be made for stray current electrolysis of the pipeline, mutual interference between the pipeline and foreign pipelines / structures, interference on foreign pipelines / structures due to the CP of the pipeline and ground bed, interference on metallic structures which lie in between pipeline and ground bed or near to ground bed, AC induction on pipeline due to overhead EHV/HV power lines, interference due to high voltage DC lines, electric traction, HV earthing system/Substation earthing system etc.

ii) Measurements including pipe to soil potentials and pipe currents etc. on the pipeline / structure being CP protected and on foreign pipelines / structures, and ground potential gradient etc. shall be made to investigate the current discharge and pickup locations. In case of fluctuating stray currents, investigations shall be made continuously over a period of time and if required simultaneously at different locations to find out the stray current source (s). Recorders shall be preferably be used for long time measurements.

iii) Where foreign pipelines (Cathodically protected or unprotected) by an independent CP system run in parallel to the protected pipeline, either in the same trench or very near to the protected pipeline and are not bonded to it, investigations shall be performed for current discharge points on both the pipelines.

iv) Mitigative measures shall be provided depending upon the type of interference. These shall include installation of bond with variable resistor and diodes, installation of galvanic anodes for auxiliary drainage of current, adjustment/ relocation (if possible) of offending interference source, provision of electrical shield etc. depending on the type of interference.

v) Bonding with foreign pipelines / structures as a mitigation measure shall be provided where the owners of the foreign pipelines / structures have no objection. Otherwise alternative mitigation measures shall be provided. Wherever bonding is provided for mitigation, the bonding resistor shall be adjusted for optimum value for minimum / no interference. Galvanic anodes installed as a mitigation measure shall be adequately sized for the design life specified for permanent CP system.

vi) A.C. voltage measurements shall also be made on the pipeline to find out continuous induction of voltage beyond safe limits. In such a case, the pipeline shall be grounded to the earth of nearest transmission tower causing voltage induction through polarization cell or to a separate earthing system of zinc anodes through polarization cell.

vii) CRITERIA FOR AC INTERFERENCE

Max. pipe to soil induced voltage must be less than 15V AC RMS for steady state condition of power line. Under fault condition, the permissible touch & step voltages must be limited to the levels defined in IEEE-80 latest revision for human safety.

Total coating stress voltage (inductive e & conductive) within 3kV AC for 3LPE coating, to prevent coating damages.

AC current density measured over a period of 24hrs should be less than 30A/m2. If the current density is more than 30A/m2 but less than 75A/m2, then ratio between AC current density (I ac) and DC current density (I dc) shall be less than 5 over period of 24 hrs. In no case, AC current density above 75A/m2 shall be permissible in the pipeline.

Necessary mitigation measures shall be provided to reduce the AC discharge densities.

Detailed scope for the AC-DC interference survey and mitigation is mentioned in the scope of work, Accordingly detailed Procedure shall be submitted for review and approval to Owner/MECON.

viii) DATA COLLECTION

Contractor shall carry out field survey for collecting data from various sources like Client/Consultant/Power Authorities/ Foreign facility Owners/Pipeline alignment sheets for the following information:

- Existing or proposed (11kV & above) EHV/HV AC/ DC overhead power lines along with details of voltage, AC/DC type etc, crossing or parallel to the pipeline, phase configuration, number of circuits and other line parameters.
- Voltage rating, phases, sheathing details of underground power cables along ROW or in its vicinity.
- Tower footing, earthing distance from tentative ROU to be recorded for ascertaining safe distance.
- Fault current rating of each HT line, designed load current, operating load current Location of grounding of tower and substation location etc. to be obtained from power companies.
- Multi-layer soil resistivity near the area of AC tower parallel or crossing.

ix) CALCULATIONS

Study shall include the following calculations:

- Induced voltages on pipeline under steady state operating condition of the transmission line
- Induced voltages on pipeline under fault conditions
- Ground Potential (GPR) during fault conditions
- AC current density/soil resistivity measurement
- Coating stress voltage under fault conditions
- Detailed Bill of Material
- Post mitigation verifying the induced voltage/ current density
- Rated operating condition
- Lightning (min 40kA grounded thru the towers)

x) REPORT

Recommendation shall be for both operating load and design load of the pipeline. AC/DC interference mitigation report shall have the following:

- Mitigation measure location details with detailed BOM
- Type of grounding: distributed vertical zinc ground anodes, horizontal zinc ribbon anode, multiple zinc ribbon anodes, independent deep ground beds. The grounding system shall be de-coupled with the ICCP system using suitably located and rated solid state de-couplers.
- Location of TLP's where AC corrosion coupons/ Polarization coupons shall be installed for monitoring the induced potentials and AC current densities for safe operation of the pipeline.
- Locations of additional TLP's

Post commissioning, the values of current density and AC induced voltages shall be measured at site and the same cross checked with the modelled values, the overall profile of the site data and the modelled data as seen over a segment shall be in similar.

Specialist agency shall also verify the induced voltage/ current density after the mitigation are taken care & installed at the site.

13.0 POST COMMISSIONING SURVEY

CLOSE INTERVAL POTENTIAL SURVEY

Where specified, contractor shall carry out a close internal potential survey over the entire length of pipeline by computerised potential logging method and identify suspected holiday spots on the pipeline coating, under protected/overprotected areas after the back filling has been consolidated sufficiently and CP system has stabilized. Contractor shall identify the necessary pipe coating required to be repaired. Detailed procedures for running this survey shall be submitted for approval. During survey the reference cell shall be calibrated minimum once in 24 hours.

Post commissioning of the CP System, after 30 days of line polarization, a Computerized Potential Logging [CPL] survey will be conducted, as per approved procedure. "ON/OFF" Potential survey @1m interval along entire ROW shall be recorded. For the survey, Data Logger of reputed make (Calibrated) & Current interrupter [in-built in the CPTRU] will be used by experienced and trained manpower. All CPTRU to be synchronized ON or OFF for this survey using GPS synchronizing equipment. All the survey data and findings of under-protected, over-protected zones, short etc. shall be handed over to CLIENT/ MECON as part of final technical documentation. Suitable remediation measures to be recommended for achieving adequacy of Cathodic protection throughout the pipeline length.

DCVG SURVEY

Post commissioning of the CP System, after 30 days of line polarization, CPL Survey will be conducted for evaluation of coating condition to serve as future benchmark for comparative evaluation. Based on the report of CPL survey, DCVG survey is required to be carried out at the locations identified in the CPL report or on full length of the pipeline (as defined in scope of work/design basis).

Only Good & Proven survey equipment and trained, experienced manpower to be used. The physical verification of the coating defects by bell hole survey and repairing of the same shall be done by the Contractor at no extra cost to the Owner. The scope includes identification of

defects and rectification of coating defects and testing of coating permanents (TS, Boding of coating with pipe, coating physical verification) at defect locations examinations and coating repair.

All survey Data to be submitted to Client as part of Technical Documentation.

Minimum Differential Potential Swing: A minimum pulse amplitude (difference between the rectifier "On" and "Off" states) of **1000 mV to 1500 mV** is standard for the survey at the TLP.

Following criterial shall be taken for the fault classification-

Defect Classification	%IR Drop Range	Severity & Action Plan
Category 1: Minor	**0% to 15% IR**	Minor coating holiday. Cathodic Protection (CP) is typically sufficient to prevent corrosion. **No immediate repair required**; monitor during future routine surveys.
Category 2: Moderate	**16% to 35% IR**	Moderate defect experiencing minor CP current drain. **Schedule for general maintenance** or routine repair cycles.
Category 3: Severe	**36% to 60% IR**	Large defect. Significant CP current shield or drain is occurring. **Prioritize for repair and excavation** in the short term.
Category 4: Critical	**> 60% IR**	Severe coating failure. The CP system may not completely protect the exposed steel. **Requires immediate attention, excavation, and repair**.

CAT SURVEY

Post commissioning of CP system, current attenuation test to be performed on the entire length of the pipeline to check the condition of the coating of the pipeline and serve as reference for future comparison. Bidder shall submit the CAT survey procedure for approval and survey shall be conducted accordingly.

The basic objective of CAT survey is to make comparative analysis of electrical insulation properties of one segment of the pipeline coating with another. If pipeline coating is electrically consistent along its length, then the rate of current attenuation shall be uniform. An increase in rate of current attenuation indicated leakage of impressed current signal /current through coating indicating a coating fault.

The concept of current attenuation test is to measure the impressed signal leakage from the buried pipeline. The signal leakage will depend directly on the health of the Coating.

- **Minor:** 0 - 10 dB
- **Moderate:** 10 -25 dB
- **Severe:** 25 - 50 dB (Frame A or ACVG/ DCVG is required in the section)
- **Critical:** >50 dB (Frame A or ACVG/ DCVG is required in the section)

CAT WITH A FRAME/ACVG SURVEY

After CAT survey, A-frame is used with receiver to precisely pinpoint coating defects and isolationfaults.CAT with A frame is performed at the coating defect location. A frame spikes need to make good electrical contact with the ground, preferably with damp, conductive earth. CAT with A frame survey is required to be carried out at the locations identified in the CPL/CAT report or on full length of the pipeline (as defined in scope of work).

To determine the severity of fault and compare different faults on the pipeline to decide repair priorities, take the dB microvolt reading with the A Frame at 90 degrees to the pipeline also.

14.0 DRAWINGS AND DOCUMENTS

14.1 General

i) Within three weeks from the date of issue of Purchase Order, Contractor shall submit four copies of the list of all drawings / data/ manuals / procedures for approval, identifying each document by a number and descriptive title and schedule date. This list shall be revised and extended, as necessary, during the progress of work.

ii) All drawings and documents shall be in English and shall follow metric system. Number of copies for each submission shall be as follows unless specified otherwise:

	Submission	No. of copies
a)	For Review/ Approval	5 copies
b)	Drawings issued for Execution / construction	5 copies+2 soft copy
c)	Final / As-built drgs.	5 copes+2 soft copy
d)	Operation / Maintenance Manual, Vendor data	5 copies+2 soft copy

14.2 Contract Drawings and Documents

As a part of the contract, drawings and documents to be furnished by the contractor shall include but are not limited to the following :

i) Report on corrosion survey.

ii) Basis of system design and design calculations, equipment selection criteria and sizing calculations.

iii) Bills of material, material requisitions and Purchase requisitions.

iv) QA/QC Procedures/Formats

v) Detailed construction drawings (including as-built status).

a) Separate layout drawings for each CP station showing anode- ground bed location, anode-ground bed installation details, CP station location, cable laying, ROW location. Drainage connection location, permanent reference cell locations and topographic details of the entire area.
b) Equipment layout, cable layout and schedules.
c) GTP of MMO or Hi-Cr cast iron anodes.
d) Marker drawings for cable route, anode-ground bed, drainage connection point, permanent reference cell, E/R probe, polarisation cell, pipeline grounding anodes, grounding cells, etc.
e) Fabrication details of High Silicon Cast Iron/MMO canistered anode with tail cable.
f) Fabrication, connection and installation drawing for anode-junction box.
g) Anode- ground bed construction and installation details for horizontal anode-ground bed and deep well ground bed.
h) Fabrication, installation and connection scheme drawing for different types of test-stations.
i) Fabrication and installation details of Copper/ Copper Sulphate type, Silver/ Silver Chloride type and Zinc type permanent reference cells, E/R probes, grounding cells, surge divertor, etc.
j) Fabrication and installation details of polarisation cell and its enclosure/ housing.
k) Cable to pipe joint details for charged and non-charged pipelines.
l) Incorporation of corrosion survey data, CP stations, test stations, anode beds, polarisation cells, grounding cells, grounding anodes, surge diverters etc. and other relevant features of CP system in pipeline alignment sheets and other related drawings.
m) Identification of sections of pipeline affected by interference, sources of interference, details of interference mitigation arrangements provided. Various measurement data at all relevant test stations with and without mitigation measures provided.
n) Detailed commissioning report including various measurement data at all test stations.
o) Vendor drawings and catalogues, test certificates.
p) Contractor shall hand over the complete CP system to CLIENT/MECON, with all documents pertaining to land [for PCP anode bed location] and right to lay cable & subsequent use for O&M purposes, from anode bed to power source.
q) Operation and maintenance manual.
r) Miscellaneous
- Equipment inspection and testing procedures.
- Construction, installation procedures.
- Field testing and commissioning procedures.
- Procedures and report on close interval potential survey.
- Procedure for monitoring of cathodic protection after commissioning.
- Quality control procedure.

15.0 INSTRUMENTS, TOOLS AND SPARES

i) Contractor shall provide a list of all instruments, tools and tackles necessary for proper operation and maintenance of complete cathodic protection system and associated equipment along with prices.

ii) Contractor shall provide a list of spares and consumables required along with prices for proper operation and maintenance of complete cathodic protection system and associated equipment for two years' operation of the system.

iii) All commissioning & start-up equipment/spares shall be part of contract.

16.0 INFORMATION REQUIRED WITH THE BID

Bidders are advised in their own interest to provide the following information along with the bid offer without which the bids are liable for summary rejection:

a) Basis and calculations for preliminary system design of permanent cathodic protection system.
b) List of formula to the used for detailed system design calculations, with brief explanations.
c) Basis of system design, design calculations, equipment selection criteria, sizing calculations along with characteristic curves for various equipment.
d) Preliminary bill of material for major equipment.
e) Details of the equipment/ material offered along with technical leaflets / related literature / catalogues, make, rating, type test certificates etc.
f) Dimensions, weight and general arrangement drawings for each offered equipment.
g) List of instruments, tools, tackles offered for maintenance and operation.
h) List of recommended maintenance / operation spares.
i) Clause wise deviations, if any, to the specifications along with justifications.
j) Project schedule & manpower chart to be deployed at site.

-X-X-X-

Rev : 2
Edition : 1

SPECIFICATION
FOR
CATHODIC PROTECTION
POWER SUPPLY MODULE (CPPSM)

SPECIFICATION NO.: MEC/TS/05/E9/082

(OIL & GAS SBU)
MECON LIMITED
DELHI 110 092

MECON LIMITED REGD. OFF: RANCHI 834002	STANDARD TECHNICAL SPECIFICATION ELECTRICAL SECTION, DELHI		
TITLE	CATHODIC PROTECTION POWER SUPPLY MODULE (CPPSM) DC-DC	DOCUMENT NO. MEC/TS/05/E9/082	Page 1 of 1 REVISION : 2 EDITION : 1

CONTENTS

Sl. No.	Description
1.0	SCOPE
2.0	STANDARDS
3.0	SERVICE CONDITIONS
4.0	GENERAL REQUIREMENTS
5.0	PERFORMANCE REQUIREMENTS
6.0	CONTROLS, INDICATIONS & METERING
7.0	PAINTING
8.0	SPARES
9.0	INSPECTION AND TESTING
10.0	DRAWINGS

ANNEXURE-I PURCHASER'S DATA FOR CPTR UNIT
ANNEXURE-IA GUARANTEED TECHNICAL PARTICULARS
ANNEXURE-II ACCEPTABLE MAKES FOR COMPONENTS

PREPARED BY:	CHECKED BY:	APPROVED BY:	ISSUE DATE :
(A.Moyal)	(M.K.Jaiswara)	(D.G.Majumder)	ISSUE DATE : Feb. 2016
(Aashish Moyal/Saurabh Singh)	(Quasim Ahmad)	(DG Majumder)	ISSUE DATE : Nov. 2010
(Saurabh Singh)	(Quasim Ahmad)	(D. K. Pande)	ISSUE DATE :Jan. 2009

MECON LIMITED REGD. OFF: RANCHI 834002	STANDARD TECHNICAL SPECIFICATION ELECTRICAL SECTION, DELHI		
TITLE	CATHODIC PROTECTION POWER SUPPLY MODULE (CPPSM) DC-DC	DOCUMENT NO. MEC/TS/05/E9/082	Page 1 of 1 REVISION : 2 EDITION : 1

AMENDMENT STATUS

Sl. No.	Clause / Paragraph / Annexure / Exhibit / Drawing Amended	Page No.	Rev.	Date	By		Verified	
					Name	Sig.	Name	Sig.
1	Revised & Issued as standard specification	-	-	Nov-2010	AM		QA	
2	Revised & Issued as standard specification	-	-	Feb-2016	AM		MKJ	

1.0 SCOPE

Cathodic Protection Power Supply Module (CPPSM) working on switch – mode principle is intended to supply power to cathodic protection system for under ground pipelines. This specification covers the requirements for the design, manufacture, testing, delivery to site and commissioning of the CPPSM.

2.0 CODES AND STANDARDS

2.1 In general the equipment covered by this specification shall, unless otherwise specified, be in line with the requirements of any of the latest applicable standards of:

IS:13947	:	Specification for low voltage switchgear & control gear
IS:12021	:	Control transformer for switchgear & control gear
IS:5469	:	Code of practice for use of semiconductor junction devices
IS:3700	:	Essential rating & characteristics of semiconductor devices
IS:1248	:	Analogue electrical measuring instruments
IEC: 60947	:	Low-voltage switchgear and controlgear

a) International Electromechanical Commission (IEC)
b) American Standards Institution (ANSI)

2.2 Wherever the requirements in this specification are in conflict with any of the above standards, the requirements under this specification shall be binding.

2.3 In case of imported equipments standards of the country of origin shall be applicable if these standards are equivalent or stringent than the applicable Indian standards.

2.4 The equipment shall also confirm to the provisions of Indian Electricity rules and other statutory regulations currently in force in the country.

2.5 In case of any contradiction between various referred standards/ specifications/ data sheet and statutory regulations the following order of priority shall govern.

- Statutory regulations.
- Data sheets.
- Scope of Work/ Job specification.
- Specification for PCP system.
- Codes and standards

3.0 SERVICE CONDITIONS

The CPPSM shall be suitable for installation in non air-conditioned restricted ventilated room in locations having generally warm and dusty atmosphere. Service condition shall be as specified in

the data sheet. If not specifically mentioned therein, a design ambient temperature of 40° C and an altitude not exceeding 1000 M above mean sea level shall be considered.

4.0 GENERAL REQUIREMENTS

CPPSM unit shall be capable of continuous trouble free operation at full load rating specified. The design & manufacturing of unit shall have highest grade workmanship. Interchangeability must be guaranteed for the similar type equipments/Parts & material.

4.1 Constructional Features

a) Sheet steel clad, floor mounted, freestanding design.
b) Minimum sheet steel thickness shall be 2mm (3mm for out door application).
c) Hinged door shall be provided at front & back.
d) IP-55 for Outdoor type (dust & weather proof) and IP 42 for Indoor type as specified in data sheet.
e) Suitable louvers shall be fitted for ventilation.
f) Assembled on base channel of minimum height 50mm and 2.5mm thickness.
g) Zinc bi-chromated and passivated hardware.
h) Suitable lifting arrangement shall be provided.
i) Cable entry from bottom, 2mm thick removable gland plates. CPPSM unit shall be supplied with cable lugs for termination, Cable glands (Brass, Ni Plated single compression type for indoor application & Double compression type for outdoor application)
j) Panel designation with screwed nameplate shall have letter not less than 2.5mm high.
k) Device identification on front door and inside the panel shall be of non-rusting metal.
l) Galvanic isolation between input & output shall be provided.
m) All metal parts of the panel to under go surface treatment that includes cleaning, chemical degreasing, pickling in acid, cold rinsing, phosphating and passivating followed by spraying with two coats of epoxy based primer and two coats of epoxy based paint/powder coating of approved colour (By owner/MECON) & shade.
n) All instruments shall be switchboard type and back – connected. 660V PVC insulated wires with stranded copper conductor of size 2.5 mm2 shall be used for control wiring. All fuses shall be provided inside the panel and shall be link type.
o) Natural Air (AN) cooled type (Louvered openings for natural ventilation may be provided).
p) All wiring shall be ferruled at both ends for identification of connection.
q) CPPSM unit shall have high MBTF & low MTTR.
r) Space heaters shall be provided inside the unit to prevent the moisture condensation.
s) Maximum & Minimum height of installation of control equipments (i.e. switches, push buttons etc) shall be 1800mm & 300mm from ground level.
t) Earth busbar of minimum 25x3 mm shall be provided throughout the length of unit & all non-current carrying metallic parts & installed equipments shall be earthed by this busbar.
u) CPPSM unit shall be doubly earthed, and all doors & movable parts shall be earthed by means flexible cu wire connected to earth bus bar.
v) Suitable nameplate of Anodised AL shall be provided for all panel mounted equipments, lamps, indications, switches, meters etc.
w) All live parts shall be shrouded for safety purpose.
x) 20% extra spare terminal shall be provided.

4.2 **Equipment Description**

The CPPSM shall be complete with following main section:

- Input Controls.
- Converters and Filters.
- Out put Protection.
- System Controls.
- Current interpreter
- Controls, Indication and Metering.

5.0 PERFORMANCE REQUIREMENTS

5.1 The CPPSM unit shall be a D. C. Voltage / Current controller operating on switching mode principle. Input power supply as mentioned in data sheet shall be converted into a continuously variable / adjustable output voltage/current by the control of duty cycle of conduction of the power semiconductor device. The CPPSM shall have two distinct modes of operation as below:

a) **Manual Mode**

In manual mode the output voltage of CPPSM shall be continuously adjustable over the entire rated output voltage range. The set output voltage (Vos) shall remain constant irrespective of output current. Current limit feature shall be provided in this mode of operation. The current limit (Ips) shall be continuously adjustable from zero to rated output current.

Constant Voltage Mode- In this operation the output current limit set to the maximum value. The output voltage shall be varied irrespective to the output current demand. The set value of output voltage shall be maintained constant till maximum output current limit is reached by controller, after that output voltage shall decrease to maintain the current constant.

Constant Current Mode-In this operation the output voltage limit set to the maximum value. The output current shall be varied irrespective to the output voltage. The set value of output current shall be maintained constant till maximum output voltage limit is reached by controller, after that output current shall decrease to maintain the voltage constant.

b) **Auto Mode**

In this mode of operation the output of the CPPSM shall operate in an external closed loop with pipe-to-soil potential (PSP) in feed back loop. The CPPSM shall adjust the output voltage so that the PSP as measured by reference cell always remain equal to the set potential. The set potential (Vps) shall be continuously adjustable over the specified range.

CPPSM shall be designed to operate with three number of reference cells (Provided by Main CP/Pipeline contractor) as specified in data sheet. CPPSM shall automatically select the reference cell having less negative potential than the others and use the same for CPPSM auto control (e.g. (-) 0.7 V is less negative than (-) 0.8 V).

In case of open circuit or short circuit or potential being less negative than a minimum set potential (Vrs) for the controlling reference cell, the CPPSM shall sense these conditions as reference cell failure and shall automatically switch over to the other healthy reference cell for control. Should a fault occur in all the reference cells, the output voltage of the CPPSM shall adjust automatically to a preset value (Vos) which shall be adjustable.

In no case shall the maximum PSP be allowed to exceed the specified maximum potential in any combination of circumstances. (The maximum potential is the maximum PSP measured by any of all the connected non faulty ref. Cell).

Fast acting electronic over current limit protection shall be provided, The protection shall be fast enough & operate before tripping of MCCB/MCB or blowing of fuse.

5.2 CPPSM shall continuously monitor the PSP and necessary annunciation shall be provided in case of PSP either exceeding the specified maximum limit (Vpm) or remaining lower than the specified minimum limit (Vpn).

5.2 Instruments used for measuring pipe to soil potentials with Permanent reference cell shall have high input impedance in range of 10^6 Ohm or higher, so that very least current flow from Permanent ref cell. High input impedance Op-Amp/COMS chips shall be used for each feed-back circuit from each permanent reference cell with CP unit to enhance the life of permanent reference cell.

5.3 CPPSM will consist of a DC-DC converter operating on high frequency PWM principle. The overall efficiency shall preferably be above 80 %. The output of CPPSM shall be filtered / smoothened to provide DC output with less than 5 % RMS ripple. Output regulation for no load to full load and with input voltage variation shall be better than $\pm$ 0.25V of the output setting throughout the range of output voltage and over the specified ambient temperature variation. CPPSM shall be suitable for ungrounded input supply system and shall allow grounding of positive terminal of its output.

5.4 CPPSM shall be of natural Air cooled (AN) type.

5.5 CPPSM shall have input filters to minimise the A. C. feedback to the power supply. Radio interference noise emitted by CPPSM shall be minimized to allow proper operation of telecom and SCADA systems in the vicinity. CPPSM output shall be protected against lightning surges and high voltage surges due to possible faults in high voltage transmission lines along the pipelines.

5.6 CPPSM shall be field proven and shall be suitable for unattended operation at remote locations. CPPSM design, internal component layout and component rating shall ensure high MTBF and low MTTR. Design life of CPPSM shall not be less than fifteen years. Prototype equipment shall not be acceptable.

5.7 Where specified in Data sheet, the converter shall electrically isolate the input power to CPPSM from its output so that the grounding of the (+) ve output of the CPPSM though anode ground bed shall not affect the grounding system of the input power supply. Alternatively, a separate DC-DC converter having electrical isolation between input & output power supply shall be provided at the input of CPPSM.

6.0 CONTROLS, INDICATIONS AND METERING

6.1 Following controls shall be provided on CPPSM front door:

a) ON/OFF switch for CPPSM output (MCCB/MCB 2-Pole).
b) ON/OFF control for input thru MCCB/MCB.
c) Auto/Manual mode selector switch.
d) Potentiometers for Vos, Vps and Ips settings.

6.2 Following controls shall be provided inside the module :

a) Potentiometer for Vrs, Vpm and Vpn Settings.
b) Controls for current interrupter (As per Manufacturer standard).

6.3 CPPSM shall have following indicating lights:

a) CPPSM ON/OFF (DC Supply ON) – Visible.
b) Reference 1 lowest – Visual
Reference 2 lowest – Visual
Reference 3 lowest – Visual

c) Reference 1 Fail – Visual
Reference 2 Fail – Visual
Reference 3 Fail – Visual

d) Pipeline over protected – Visual & Remote
e) Pipeline under protected – Visual & Remote
f) Unit in Auto – Visual & Remote
Unit in Manual – Visual & Remote

g) All Reference Fail – Visual & Remote
h) Current Interrupter
Power ON, ON time & OFF time

6.4 Following metering shall be provided on the CPPSM unit (Accuracy Cl 1.5) :

a) Output DC Voltage (Preferably Digital)
b) Output DC Current (Preferably Digital)
c) Digital voltmeter to measure PSP (Set and actual through a selector switch for all the reference cells) (Alternatively analog voltmeter with 0.5 accuracy class may be accepted).
d) Digital meters for measuring Vrs, Vpm, Vpn.
e) Input DC Voltage and DC Current.

6.5 CPPSM unit shall incorporate provision for remote monitoring of signals through SCADA system as per enclosed datasheet.

6.6 MONITORING AND CONTROL SIGNAL FOR SCADA

Digital and analogue monitoring signals as required for CP system shall be provided in CP unit for connection to SCADA system through Ethernet port to monitor the signals along with hardwire signals.

Details of SCADA monitoring & control signals are given below-

Sl No.	DESCRIPTION	MONITERING/ CONTROL	ANALOUGE /DIGITAL	
1	CPPSM OUT PUT VOLTAGE	M	AI and On Ethernet port	
2	CPPSM OUT PUT CURRENT	M	AI and On Ethernet port	
3	PIPELINE OVER PROTECTED	M	DI and On Ethernet	
4	PIPELINE UNDER PROTECTED	M	DI and On Ethernet port	
5	PIPE TO SOIL POTENTIAL	M	AI and On Ethernet port	
6	ALL REFERENCE CELLS FAILED	M	DI and On Ethernet port	
7	Unit Working in AUTO REF Mode	M	DI and On Ethernet port	
8	Unit Working in Manual mode	M	DI and On Ethernet port	
9	DC (solar)/ AC input fail.	M	DI and On Ethernet port	
10	Battery Low	M	AI and On Ethernet port	

1 AI: Analogue monitoring signal from Equipment to PLC/Telemetry interface cabinet (TIC)
2 DI: Digital Monitoring signal from Equipment to PLC/(TIC)
3 M-Monitoring signal
4 C-Control signal

6.7 **Current Interruption:**

A built-in Current Interrupter will be provided in the CPPSM unit, if specified in the Data Sheet. The Timer of the current Interrupter will be programmable/synchronisable type with keypad facility for setting the ON/OFF time from 1 sec to 999 sec. The Timer will have facility for syncronisation to timers in other CP units. The Timer will have facility for remote START, STOP & RESET through SCADA by means of potential free contacts. The timer will also have GPS synchronization feature.

7.0 PAINTING

The sheet steel used for fabrication shall be thoroughly cleaned and degreased to remove mill scale, rust, grease and dirt. Fabricated structures shall be pickled and then rinsed to remove any trace of acid. The under surfaces shall be prepared by applying a coat of phosphate and a coat of zinc oxide / phosphate primer. The under surface shall be free from all imperfections before undertaking the finishing coat. It shall then be spray painted /powder coated with two coats of epoxy paint. Colour of final paint shall be vendor standard unless otherwise specified in data sheet. The finished panel shall be dried in stoving ovens in dust free atmosphere. Panel finish shall be free from imperfections like pinholes, orange peels etc. All unpainted steel parts shall be cadmium plated or suitably treated to prevent corrosion.

8.0 SPARES

The vendor shall indicate item wised unit prices and recommended quantity of spares for two years normal operation. However, spares for start up and commissioning as required shall be included in CPPSM supply.

9.0 DRAWINGS AND DOCUMENTS

9.1 Vendor shall furnish all data/drawings/documents specified in the vendor data requirement.

9.2 Approval of the drawing shall not relieve the manufacturer of his responsibility to equipment conforming to the relevant specification and standards or for any mistakes, errors or omissions in the drawing.

9.3 Following minimum information shall be furnished with bed :

a) Clause wise deviations, if any, to the specifications.

9.4 The following drawings (in three sets) & documents shall be submitted for approval within 3 weeks of award of contract.

a) Power and control circuit diagrams.
b) General arrangement drawing along with dimension.
c) Technical detail along with block diagram.
d) Guaranteed technical particulars as per data sheet.
e) Recommended list of spares for 2 years operation and maintenance.
f) Installation Procedure for CPTR unit
g) Schematic diagram & wiring diagram.

h) Bill of material.
i) Ratings of major components and actual design parameters considered.
j) Terminal diagram and connection details.
k) Field testing and commissioning procedures.
l) Maintenance and operation manual, Installation instructions with dispatch.

Final drawings, operation & maintenance manual and erection instructions shall be submitted along with despatch of equipments in three sets in hard copy & two sets in soft copy (CD).

10.0 INSPECTION AND TESTING

Inspection and testing of equipment shall be carried out by the owner/ consultant at the works of the contractor on final product to ensure conformity of the same with the acceptable criteria of technical specification, approval drgs. and reference national/ international standards.

10.1 The owner or his authorized representatives may visit the works during manufacture of equipment to assess the progress of work as well as to ascertain that only quality raw materials are used for the same. He shall be given all assistance to carry out the inspection.

10.2 The contractor shall submit Quality Assurance Plan (QAP) for respective equipments within three weeks of award of contract. Owner's representative shall be given minimum two weeks advance notice for witnessing the final testing.

10.3 Inspection and testing of equipment shall be carried out by the owner/ consultant at the works of the contractor on final product to ensure conformity of the same with the acceptable criteria of technical specification, approved drawings and reference national/ international standards.

10.4 QAP shall be prepared and furnished by the contractor in MECON Form No. 11.20(4.4) F-10. Test certificates including test records and performance data etc shall be furnished by the vendor.

10.5 **'Type test' including 8 hr. heat run test shall be conducted on one system of similar type rating and 'Acceptance test' on the remaining. Final acceptance testing shall be done at site. Site acceptance test procedure shall be submitted by the Contractor along with QAP.**

10.6 Final acceptance testing shall be done at site. Site acceptance test procedure shall be submitted by the Contractor along with QAP.

-x-x-x-

REV. : 0
Edition : 1

DATA SHEET
FOR
CATHODIC PROTECTION
POWER SUPPLY MODULE (CPPSM)

SPECIFICATION NO. - MEC/DS/05/E9/082

(OIL & GAS SBU)
MECON LIMITED

ANNEXURE - I

PURCHASER'S DATA FOR CPPSM UNIT

1	Type	Floor mounted , Indoor – IP 42 DC-DC Operated power supply module with Galvanic Isolation unit for Impressed Current CP System
2	Cooling	Natural Air cooling (AN)
3	Quantity	As per Scope of work.
4	Input Power Supply	From standalone 800W, 48V DC solar system /OR As per Scope of work.
5	Input Fault Level	-------
6	Number of output circuits	One/Two As required
7	Modes of Operation	(a) Auto Ref (b) Manual mode
8	Rated output Voltage (+ve earthed)	As per Scope of work.
9	DC Voltage Regulation	±0.25 V
10	Rated Output Current	As per Scope of work.
11	DC Current Regulation	±0.5 Amp
12	PSP Voltage Regulation	Better than ±15 mV
13	Pipe to Soil Potensial Setting range (Vps)	(-)0.700mV to (-) 2500 mV – (For Cu/CuSO4 Electrode)
14	Minimum set potential range (Vrs)	(-) 0.4 V to (-) 1 V
15	Maximum pipeline potential range (Vpm)	(-) 1.2 V to (-) 2.5 V
16	Minimum pipeline potential range (Vpn)	(-) 0.7 V to (-)1.0 V
17	Number of reference cells for control	Required (3 Nos.)
18	Scada Interface and Current Interruption facility	Required
19	Inbuilt Current Interruption Facility	Required

20	**Site conditions:** (i) Ambient Temperature (ii) Relative Humidity (iii) Altitude above mean sea level. (iv) Specific Environment	 0°-50°C (max.) 94% (max.) Less than 1000m above MSL To withstand site condition (Dry & Dust Storms during summer & low temp during winter)
21	Shade for final paint	RAL 7032
22	Commissioning at site	By Vendor
23	Meters	1) Digital Meters (Three & Half Digits) for a) AC Input Voltage b) AC Input Current c) DC output voltage d) DC output current e) Reference voltage (P.S.P.)
24	Alarm & Indication (Indication Lamp shall be Cluster LED type)	a) CPPSM ON/OFF (DC Supply ON) – Visible. b) Reference 1 lowest –Visual Reference 2 lowest – Visual Reference 3 lowest – Visual c) Reference 1 Fail – Visual Reference 2 Fail – Visual Reference 3 Fail – Visual d) Pipeline over protected – Visual & Remote e) Pipeline under protected – Visual & Remote f) Unit in Auto – Visual & Remote Unit in Manual – Visual & Remote g) DC output over current (Visual) h) All Reference Fail – Visual & Remote i) Current Interrupter Power ON, ON time & OFF time
25	SCADA Monitoring Facility	Signals / Contacts shall be provided for remote monitoring & control as per cl. No. 6.6 of specification.
26	Current interruption Facility	Current interruption facility will be provided by means of a built-in Electronic Interrupter logic & microprocessor based digital timer with real time clock & ON/OFF time display. The timer will have facility for adjusting the ON time & OFF time from 0 to 999 Sec. by means of digital

		setting facility. The timer will also have Start/stop facility thru a single external potential free contact. The Timer will have GPS Synchronisation facility.
27	Protection	a) Lightning Arrestor on DC Input & DC Output Sides. b) HRC fuses in input DC supply lines and in each DC leads c) Surge suppressors on input, output and across each diode and SCR (Power Transistors). d) Battery deep discharge Protection. e) Adjustable current limit, overcurrent and short-circuit protection. f) HRC fuses outgoing DC +ve lead and the DC –ve lead. g) MCCB/MCB in DC I/P. h) MCCBMCB in DC O/P. i) Fast acting electronic over current limit circuit. j) Glass cartridge fuses in live line of all lamps, auxiliary power line to control circuit. Note-Electronic earthing for PLC/Modules shall be provided separately (Other then equipment earthing)

Note- Various Settings of CP unit for Zn ref electrode will be differ from conventional Cu-Cuso4 ref electrode, Bidder shall submit the data sheet of the CP unit for approval before manufacturing of CP unit considering the Constant conversion factor of -1.1v to CuSO4.

ANNEXURE – I A

28	**Guaranteed Technical Particulars**	
28.1	Efficiency:	
	At 10% Load	
	At 25% Load	
	At 50% Load	
	At 75% Load	
	At 100% Load	
28.2	Voltage regulation (from zero to 100% load variation and throughout the output voltage range) Better than ±0.25V	
	Manual mode	
	Auto mode	
28.3	Output ripple at full load current (less than 5% RMS)	
	At 10% output voltage	
	At 100% output voltage	
29	Inspection	8 hour heat run test & routine test shall be witnessed by purchase at manufacturers work. Final integrated field testing shall be done at site.
30	Combined	Combined load test at site.

ANNEXURE-II

ACCEPTABLE MAKES FOR COMPONENTS

S.No.	Material	Make
1	Contactors	Siemens/ L&T/ BCH/ Telemechnique
2	Moulded Case Circuit Breaker	GE/ Cromption/ L&T / Hager
3	Miniature circuit breaker	MDS/ Indoasian/ Havell / Hager
4	Transformer	Indcoil/ Kappa Electrical/ AE
5	Switches, Fuses, Fuse base	Siemens/ L&T/ GE / Kaycee/Salzer
6	PB Elements/ Indication Lamps	Siemens / L&T / Teknic / Concord/ BCH
7	Selector Switch	EE/ Siemens/ Kaycee/ L&T
8	Terminals	Elmex/ Connect Well/ Phoenix
9	Meters	AEP/ Simco/ IMP/ GEC/ Rishab/Meco
10	Cable Glands	Commet/ Baliga / Flexpro/ Sudhir

(List of suppliers for solid-state devices shall be furnished by the vendor for Owner's approval).

(1)	HRC Fuses	(13)	Lightning Arrestor
(2)	Auxikary Fuses	(14)	Blade Resistance
(3)	Interrupter Contractor	(15)	Potentio Meter
(4)	DC – DC Converter Power Transistors	(16)	LED's
(5)	Volt Meter (Digital) 3 1/2	(17)	Convertors (4 to 20 ma)
(6)	Ammeter (Digital) 3 1/2	(18)	Timer (Interrupter)
(7)	Shunt	(19)	All electronic (AC DC)
(8)	Filter Choke in DC Output	(20)	Display Board
(9)	Filter Capacitor bank in DC Output	(21)	Filters
(10)	Power Diode	(22)	Links
(11)	Diode		
(12)	Search Suppressor Network		

-x-x-x-

REV. : 3
Edition : 2

SPECIFICATION
FOR
CATHODIC PROTECTION
TRANSFORMER RECTIFIER (TR) UNIT

SPECIFICATION NO.:- MEC/TS/05/E9/082A

(OIL & GAS SBU)
MECON LIMITED
DELHI 110 092

CONTENTS

Sl. No.	Description
1.0	SCOPE
2.0	STANDARDS
3.0	SERVICE CONDITIONS
4.0	GENERAL REQUIREMENTS
5.0	PERFORMANCE REQUIREMENTS
6.0	CONTROLS, INDICATIONS & METERING
7.0	PAINTING
8.0	SPARES
9.0	DRAWINGS & DOCUMENTS
10.0	INSPECTION AND TESTING

ANNEXURE-I PURCHASER'S DATA FOR CPTR UNIT
ANNEXURE-IA GUARANTEED TECHNICAL PARTICULARS
ANNEXURE-II ACCEPTABLE MAKES FOR COMPONENTS

MECON LIMITED REGD. OFF: RANCHI 834002	STANDARD TECHNICAL SPECIFICATION ELECTRICAL SECTION, DELHI		
TITLE	CATHODIC PROTECTION TRANSFORMER RECTIFIER (CPTR) UNIT	DOCUMENT NO. MEC/TS/05/E9/082A	Page 1 of 1 REVISION : 3 EDITION : 2

AMENDMENT STATUS

Sl. No.	Clause / Paragraph / Annexure / Exhibit / Drawing Amended	Page No.	Rev.	Date	By		Verified	
					Name	Sig.	Name	Sig.
1	Revised & Issued as standard specification	-	1	Nov.-2010	AM		QA	
2	Revised & Issued as standard specification	-	2	Feb.-2016	AM		MKJ	
3	Revised & Issued as standard specification	-	3	July-2020	AM		MKJ	
	Edition-2	-	3	Sept-2023	AM		QA	

1.0 SCOPE

Cathodic Protection Transformer Rectifier Unit (T/R) working on controlled Rectification principle is intended to supply power to cathodic protection system for under ground pipelines. This specification covers the requirements for the design, manufacture, testing, delivery to site and commissioning of the T/R Unit (as specified in data sheet).

2.0 CODES AND STANDARDS

2.1 In general the equipment covered by this specification shall, unless otherwise specified, be in line with the requirements of any of the latest applicable standards of:

IS:13947 : Specification for low voltage switchgear & control gear

IS:12021 : Control transformer for switchgear & control gear

IS:5469 : Code of practice for use of semiconductor junction devices

IS:3700 : Essential rating & characteristics of semiconductor devices

IS:1248 : Analogue electrical measuring instruments

IEC: 60947 : Low-voltage switchgear and controlgear

a) International Electromechanical Commission (IEC)
b) American Standards Institution (ANSI)

2.2 Wherever the requirements in this specification are in conflict with any of the above standards, the requirements under this specification shall be binding.

2.3 In case of imported equipments standards of the country of origin shall be applicable if these standards are equivalent or stringent than the applicable Indian standards.

2.4 The equipment shall also confirm to the provisions of Indian Electricity rules and other statutory regulations currently in force in the country.

2.5 In case of any contradiction between various referred standards/ specifications/ data sheet and statutory regulations the following order of priority shall govern.

- Statutory regulations.
- SOR/Schedule of rates.
- Design Basis/Scope of Work/ Job specification.
- Data sheets.
- Specification for PCP system.
- Codes and standards

3.0 SERVICE CONDITIONS

The T/R unit shall be suitable for installation in non air-conditioned restricted ventilated room in locations having generally warm and dusty atmosphere. Service condition shall be as specified in the data sheet/design basis/PJS (Particular Job Specification). If not specifically mentioned therein, a design ambient temperature of 50° C and an altitude not exceeding 1000 M above mean sea level shall be considered.

4.0 GENERAL REQUIREMENTS

CPTR unit shall be capable of continuous trouble free operation at full load rating specified. The design & manufacturing of unit shall have highest grade workmanship. Interchangeability must be guaranteed for the similar type equipments/Parts & material.

4.1 Constructional Features

a) Sheet steel clad, floor mounted, freestanding design.
b) The control shall be achieved using thyristors and fully solid-state logic only.
c) Minimum sheet steel thickness shall be 2mm (3mm for out door application).
d) Lockable door shall be provided at front & back
e) IP-55 for Outdoor type (dust & weather proof) and IP 42 for Indoor type as specified in data sheet.
f) Assembled on base channel of minimum height 50mm and 2.5mm thickness.
g) Zinc bi-chromated and passivated hardware.
h) Suitable lifting arrangement shall be provided.
i) Cable entry from bottom, 3mm thick removable gland plates. CPTR unit shall be supplied with cable lugs for termination, Cable glands (Brass, Ni Plated single compression type for indoor application & Double compression type for outdoor application)
j) Hinged doors shall be provided at front & back side.
k) Panel designation with screwed nameplate shall have letter not less than 2.5mm high.
l) Device identification on front door and inside the panel shall be of non-rusting metal.
m) All metal parts of the panel to under go surface treatment that includes cleaning, chemical degreasing, pickling in acid, cold rinsing, phosphating and passivating followed by spraying with two coats of epoxy based primer and two coats of epoxy based paint/powder coating of approved colour (By owner/MECON) & shade.
n) Natural Air (AN) cooled type (Louvered openings for natural ventilation may be provided with wire mesh).
o) All wiring shall be ferruled at both ends for identification of connection.
p) Input power factor of unit shall be better than 0.8 (lag) @ rated load.
q) CPTR unit shall have high MBTF & low MTTR.
r) Space heaters shall be provided inside the unit to prevent the moisture condensation.
s) Maximum & Minimum height of installation of control equipments (i.e. switches, push buttons etc) shall be 1800mm & 300mm from ground level.
t) Earth busbar of minimum 25x3 mm shall be provided throughout the length of unit & all non-current carrying metallic parts & installed equipments shall be earthed by this busbar.
u) CPTR unit shall be doubly earthed, and all doors & movable parts shall be earthed by means flexible cu wire connected to earth bus bar.
v) Suitable nameplate of Anodised AL shall be provided for all panel mounted equipments, lamps, indications, switches, meters etc.
w) All live parts shall be shrouded for safety purpose.
x) 20% extra spare terminal shall be provided.

4.2 **Equipment Description**

The TR unit shall be complete with following main section:

- Transformer and Input Controls.
- Rectifier and Filter.
- Out put Protection.
- System Controls.
- Current interpreter
- Controls, Indication and Metering.

4.3 **Transformer and Input Controls**

The transformer shall be natural cooled, class-F insulation, and dry type with separate primary and secondary windings. An intermediate earth screen shall be provided between primary and secondary windings. Transformer shall be vacuum impregnated with epoxy varnish and backed.

Unless otherwise specified transformer shall have primary with tappings for $\pm$ 5%

The winding size shall be based on maximum current density of 1.6 Amps/sq. mm of copper conductor.

4.3.1 MCCB/MCB with thermal over load and Magnetic short circuit release shall be provided at the input of the T/R unit and shall also serve as power ON/ OFF switch. A lightning arrestor rated for 25 KA (8/20 uS) surge current discharge capacity and rated voltage, maximum spark over voltage rating suitable to protect the TR unit against lightning surges.

4.4 **Rectifier and Filters**

4.4.1 The rectifier shall be made of thyristors and diodes as basic components. The rectifier shall be full wave and fully controlled type. CPTR unit shall be single phase type (suitable for 230V 1-Ph AC supply). The current rating of thyristors and diodes shall be at least three times the nominal load current and voltage rating shall be sufficient to coordinate protection with lightning arrestor provided at the output. Shunt Zeners/ MOVs shall be provided across the rectifier elements for protection.

The rectifier elements shall have humidity/ moisture resistant finish and mounted in sufficiently sized heat sink. The rectifier elements shall have protection against high dv/ dt and di/ dt.

4.4.2 Ripple content in the DC output of the rectifier should be less than 5% RMS at rated output for which adequate filtering shall be provided on the to limit the ripple content.

4.4.3 For T/R units with multiple output circuits, each output circuit shall have independent rectifier and filter fed from separate secondary windings of the transformer.

4.5 **Output Protection**

MCCB/MCB (2-Pole) having thermal over load & Magnetic Short Ckt Protection shall be provided on both the terminals of the output mainly for output isolation purpose. A lightning arrestor rated for 10/350uS (50kA) impulse current discharge capacities and rated voltage, maximum spark over voltage rating suitable to protect the TR unit against lightning surges. For TR units with multiple output circuits each output circuit shall have independent protections.

5.0 PERFORMANCE REQUIREMENTS

5.1 The T/R unit shall be a D. C. Voltage / Current controller operating on controlled Rectification principle. Input power supply as mentioned in data sheet shall be converted into a continuously variable / adjustable output voltage/current by the control of duty cycle of conduction of the power semiconductor device. The T/R shall have two distinct modes of operation as below:

a) **Manual Mode**

In manual mode the output voltage of T/R unit shall be continuously adjustable over the entire rated output voltage range. The set output voltage (Vos) shall remain constant irrespective of output current. Current limit feature shall be provided in this mode of operation. The current limit (Ips) shall be continuously adjustable from zero to rated output current.

Constant Voltage Mode- In this operation the output current limit set to the maximum value. The output voltage shall be varied irrespective to the output current demand. The set value of output voltage shall be maintained constant till maximum output current limit is reached by controller, after that output voltage shall decrease to maintain the current constant.

Constant Current Mode-In this operation the output voltage limit set to the maximum value. The output current shall be varied irrespective to the output voltage. The set value of output current shall be maintained constant till maximum output voltage limit is reached by controller, after that output current shall decrease to maintain the voltage constant.

b) **Auto Mode**

In this mode of operation the output of the T/R unit shall operate in an external closed loop with pipe-to-soil potential (PSP) in feed back loop. The T/R unit shall adjust the output voltage so that the PSP as measured by reference cell always remain equal to the set potential. The set potential (Vps) shall be continuously adjustable over the specified range.

T/R unit shall be designed to operate with three number of reference cells (Provided by Main CP/Pipeline contractor) as specified in data sheet. T/R unit shall automatically select the reference cell having less negative potential than the others and use the same for auto PSP control (e.g. (-) 0.7 V is less negative than (-) 0.8 V).

In case of open circuit or short circuit or potential being less negative than a minimum set potential (Vrs) for the controlling reference cell, the T/R shall sense these conditions as reference

cell failure and shall automatically switch over to the other healthy reference cell for control. If fault occur in all the reference cells (All reference cell fail), the output voltage of the T/R unit shall adjust automatically to a preset value (Vos) which shall be adjustable.

In no case shall the maximum PSP be allowed to exceed the specified maximum potential in any combination of circumstances. (The maximum potential is the maximum PSP measured by any of all the connected non faulty ref. Cell).

Fast acting electronic over current limit protection shall be provided, The protection shall be fast enough & operate before tripping of MCCB/MCB or blowing of fuse.

5.2 T/R unity shall continuously monitor the PSP and necessary annunciation shall be provided in case of PSP either exceeding the specified maximum limit (Vpm) or remaining lower than the specified minimum limit (Vpn).

5.3 Instruments used for measuring pipe to soil potentials with Permanent reference cell shall have high input impedance in range of 10^6 Ohm or higher, so that very least current flow from Permanent ref cell. High input impedance Op-Amp/COMS chips shall be used for each feed-back circuit from each permanent reference cell with CP unit to enhance the life of permanent reference cell.

5.4 T/R unit shall operate on controlled Rectification Principle. The overall efficiency shall preferably be above 80 %. The output of T/R unit shall be filtered / smoothened to provide DC output with less than 5 % RMS ripple. Output regulation for no load to full load and with input voltage variation shall be better than $\pm$ 0.25V of the output setting throughout the range of output voltage and over the specified ambient temperature variation. T/R unit shall allow grounding of positive terminal of its output.

5.5 T/R unit shall be of natural Air Cooled (AN) type.

5.6 T/R unit shall have input filters to minimize the RFI feedback to the AC power supply. Radio interference noise emitted by T/R unit shall be minimized to allow proper operation of telecom and SCADA systems in the vicinity. T/R output shall be protected against lightning surges and high voltage surges due to possible faults in high voltage transmission lines along the pipelines.

5.7 T/R unit shall be field proven and shall be suitable for unattended operation at remote locations. T/R unit design, internal component layout and component rating shall ensure high MTBF and low MTTR. Design life of T/R unit shall not be less than fifteen years. Prototype equipment shall not be acceptable.

Note- Various Settings of CP unit for Zn ref electrode will be differ from conventional Cu-Cuso4 ref electrode, Bidder shall submit the data sheet of the CP unit for approval before manufacturing of CP unit considering the Constant conversion factor of -1.1v to CuSO4.

6.0 CONTROLS, INDICATIONS AND METERING

6.1 Following controls shall be provided on T/R unit front door :

a) ON/OFF switch for DC output (MCCB/MCB 2-Pole)
b) ON/OFF control for input thru MCCB/MCB
c) Auto/Manual mode selector switch
d) Potentiometers for Vos, Vps and Ips settings.

6.2 Following controls shall be provided inside the module :

a) Potentiometer for Vrs, Vpm and Vpn Settings.
b) Controls for current interrupter (As per Manufacturer standard).

6.3 T/R unit shall have following indicating lamps:

a) T/R UNIT ON/OFF (AC Supply ON) – Visible.
b) Reference 1 lowest –Visual
Reference 2 lowest – Visual
Reference 3 lowest – Visual

c) Reference 1 Fail – Visual
Reference 2 Fail – Visual
Reference 3 Fail – Visual

d) Pipeline over protected – Visual & Remote
e) Pipeline under protected – Visual & Remote
f) Unit in Auto – Visual & Remote
Unit in Manual – Visual & Remote
g) All Reference Fail – Visual & Remote
h) Current Interrupter
Power ON, ON time & OFF time

6.4 Following metering shall be provided on the T/R unit (Accuracy Cl 1.5) :

a) Output Voltage (Preferably Digital)
b) Output Current (Preferably Digital)
c) Digital voltmeter to measure PSP (Set and actual through a selector switch for all the reference cells) (Alternatively analog voltmeter with 0.5 accuracy class may be accepted).
d) Digital meters for measuring Vrs, Vpm, Vpn.
e) Input AC Voltage and AC Current.

6.5 T/R unit shall incorporate provision for remote monitoring of T/R unit through SCADA system as per enclosed datasheet.

6.6 MONITORING AND CONTROL SIGNAL FOR SCADA

Digital and analogue signals as required for monitoring of CP system shall be provided in CPTR Unit for connection to SCADA system.

CPTR unit shall be properly interfaced with SCADA RTU through Hardwired link for various analogue and digital signals. Details of SCADA monitoring signals are given below (Refer design

basis for any change in communication protocol and additional requirement for interfacing with SCADA system)-

Sl No.	DESCRIPTION	MONITERING/ CONTROL	ANALOUGE /DIGITAL	
1	CP TR/CPPSM OUT PUT VOLTAGE	M	AI (4-20mA)	
2	CP TR/CPPSM OUT PUT CURRENT	M	AI (4-20mA)	
3	PIPELINE OVER PROTECTED	M	DI	
4	PIPELINE UNDER PROTECTED	M	DI	
5	PIPE TO SOIL POTENTIAL	M	AI (4-20mA)	
6	PIPE TO SOIL POTENTIAL OF UNPROTECTED SIDE OF THE PIPELINE (IJ)	M	AI (4-20mA)	
7	ALL REFERENCE CELLS FAILED	M	DI	
8	REFERENCE 1, 2, 3 FAIL INCLUDING REF CELL ON UNPROTECTED SIDE FAIL.	M	DI (4 nos.)	
9	UNIT WORKING IN AUTO REF MODE	M	DI	
10	UNIT WORKING IN MANUAL MODE/AUTO MODE	M	DI	
11	AC INPUT FAIL	M	DI	
12	Battey Low	M	DI	For CPPSM Only
13	CURRENT INTERRUPTER START	C	DO	
14	CURRENT INTERRUPTER STOP	C	DO	
15	CURRENT INTERRUPTER RESET	C	DO	

1 AI: Analogue monitoring signal from Equipment to PLC/Telemetry interface cabinet (TIC)
2 DI: Digital Monitoring signal from Equipment to PLC/(TIC)
3 M-Monitoring signal
4 C-Control signal
5 For any control signal the signal shall be available from SCADA for less than 2 seconds only.
6 The rating of the potential free contact for digital input and output signals from Equipment/PLC/ RTU shall be 24 V DC, 1.5 A DC. Analogue signals shall be 4-20 mA, galvanically isolated.

Provision for minimum two nos analogue and two nos of digital input signal to SCADA System shall be available for future use, from CPTRU to SCADA. pre-installed AI converter, Digital relays for future use.

Control signal shall be provided only for remote operation of the current interrupter.

6.7 **Current Interruption :**

A built-in Current Interrupter will be provided in the CP T/R unit, if specified in the Data Sheet. The Timer of the current Interrupter will be programmable/synchronisable type with keypad facility and remotely from SCADA for setting the ON/OFF time from 1 sec to 999 sec. The Timer will have facility for synchronization to timers in other CP units. The timer will also have GPS synchronization feature.

7.0 PAINTING

The sheet steel used for fabrication shall be thoroughly cleaned and degreased to remove mill scale, rust, grease and dirt. Fabricated structures shall be pickled and then rinsed to remove any trace of acid. The under surfaces shall be prepared by applying a coat of phosphate and a coat of zinc oxide / phosphate primer. The under surface shall be free from all imperfections before undertaking the finishing coat. It shall then be spray painted with two coats of epoxy paint/powder coating.

The finished panel shall be dried in stoving ovens in dust free atmosphere. Panel finish shall be free from imperfections like pinholes, orange peels etc. All unpainted steel parts shall be cadmium plated or suitably treated to prevent corrosion.

8.0 SPARES

The vendor shall indicate item wised unit prices and recommended quantity of spares for two years normal operation. However, spares for start up and commissioning as required shall be included in T/R unit supply.

9.0 DRAWINGS AND DOCUMENTS

9.1 Vendor shall furnish all data/drawings/documents specified in the vendor data requirement.

9.2 Approval of the drawing shall not relieve the manufacturer of his responsibility to equipment conforming to the relevant specification and standards or for any mistakes, errors or omissions in the drawing.

9.3 Following minimum information shall be furnished with bed :

a) Clause wise deviations, if any, to the specifications.

9.4 The following drawings (in three sets) & documents shall be submitted for approval within 3 weeks of award of contract.

a) Power and control circuit diagrams.
b) General arrangement drawing along with dimension.
c) Technical detail along with block diagram.
d) Guaranteed technical particulars as per data sheet.
e) Recommended list of spares for 2 years operation and maintenance.
f) Installation Procedure for CPTR unit
g) Schematic diagram & wiring diagram.
h) Bill of material.
i) Ratings of major components and actual design parameters considered.
j) Terminal diagram and connection details.
k) Field testing and commissioning procedures.
l) Maintenance and operation manual, Installation instructions with dispatch.

Final drawings, operation & maintenance manual and erection instructions shall be submitted along with despatch of equipments in three sets in hard copy & two sets in soft copy (CD).

10.0 INSPECTION AND TESTING

10.1 The owner or his authorized representatives may visit the works during manufacture of equipment to assess the progress of work as well as to ascertain that only quality raw materials are used for the same. He shall be given all assistance to carry out the inspection.

10.2 The contractor shall submit Quality Assurance Plan (QAP) for respective equipments within three weeks of award of contract. Owner's representative shall be given minimum two weeks advance notice for witnessing the final testing.

10.3 Inspection and testing of equipment shall be carried out by the owner/ consultant at the works of the contractor on final product to ensure conformity of the same with the acceptable criteria of technical specification, approved drawings and reference national/ international standards.

10.4 QAP shall be prepared and furnished by the contractor in MECON Form No. 11.20(4.4) F-10. Test certificates including test records and performance data etc shall be furnished by the vendor.

10.5 **'Type test' including 16 hr. heat run test shall be conducted on one system of similar type rating and 'Acceptance test' on the remaining. Final acceptance testing shall be done at site. Site acceptance test procedure shall be submitted by the Contractor along with QAP.**

10.6 Final acceptance testing shall be done at site. Site acceptance test procedure shall be submitted by the Contractor along with QAP.

-x-x-x-

REV. : 1
Edition : 2

DATA SHEET

FOR

CATHODIC PROTECTION

TRANSFORMER RECTIFIER (TR) UNIT

SPECIFICATION NO.- MEC/DS/05/E9/082A

(OIL & GAS SBU)
MECON LIMITED

ANNEXURE - I

PURCHASER'S DATA FOR CPTR UNIT

1	Type	Floor mounted, Indoor – IP 42 AC Operated Transformer Rectifier Unit for Impressed Current CP System
2	Fabrication details	Minimum sheet steel thickness shall be 2mm (3mm for outdoor application). Cable entry from bottom, 3mm thick removable gland plates
3	Cooling	Natural Air cooling (AN)
4	Quantity	As per Scope of work
5	Transformer	Insulation Vacuum pressure Impregnated Insulation, Class-F, FOS-125%
6	Factor of safety for Diodes/SCRs:	Voltage 300% factor of safety, Current- 400% factor of safety
7	Surge Diverters for diodes/SCRs	Metal Oxide Varistors / Capacitors / R - C Networks
8	Input Power Supply	As per Scope of work/Design basis
9	Input Fault Level	10 KA (for 1 Second)
10	Number of output circuits	One/Two As required
11	Modes of Operation	(a) Auto Ref (b) Manual mode
12	Control Element	The DC output will be controlled using latest solid state SCRs. These SCRs will be controlled by the commands from the control circuits. All the Electronic circuits will be assembled on plug-in type control cards.
13	Rated output Voltage (+ve earthed)	As per Scope of work/As per design calculations
14	DC Voltage Regulation	Better than ± 0.25V
15	Rated Output Current	As per Scope of work /As per design calculations
16	Filtering circuit	L.C. Filter
17	Insulation Level	2KV for 1minute
18	Full load PF	Better than 0.8 lag
19	Full load Efficiency	More than 80%
20	Peak Inverse Voltage R.M.S. Voltage Rating Peak Discharge Current Rating	1500V 500V 5KA
21	DC Current Regulation	±0.5 Amp
22	PSP Voltage Regulation	Better than ±15 mV

23	Pipe to Soil Potential Setting range (Vps)	(-)0.700mV to (-) 2500 mV – (For Cu/CuSO4 Electrode)
24	Minimum set potential range (Vrs)	(-)0.4 V to (-)1 V
25	Maximum pipeline potential range (Vpm)	(-)1.2 V to (-)2.5 V
26	Minimum pipeline potential range (Vpn)	(-)0.7 V to (-)1.0 V
27	Reference fail safe feature	In the event of failure of all the reference electrodes, the DC output voltage of the unit will get set to a preset value. This preset voltage is adjustable from 0 to rated value.
28	Number of reference cells for control	Required (3 Nos.) & 01 on unprotected side of IJ.
29	SCADA Interface and Current Interruption facility (Keypad and SACADA)	Required
	Inbuilt Current Interruption Facility	Required
30	**Site conditions:** (i) Ambient Temperature (ii) Relative Humidity (iii) Altitude above mean sea level. (iv) Specific Environment	As defined in scope of work/design basis, minimum conditions are follows- 0°-50°C (max.) 94% (max.) Less than 1000m above MSL To withstand site condition (Dry & Dust Storms during summer & low temp during winter)
31	Painting Details	After preparation of the priming the steel surface, spray painting with two coats of final paint shall be done. The final paint shall be 1 coat of 2 pack high built epoxy with polyamide hardener cure@100 µ DFT/coat followed by 1 top coat of acrylic polyurethane finish paint @ 40 µ DFT/coat, color of TLP/JB'S & supports shall be RAL 7035 (LIGHT GRAY) inside and outside the unit.

32	Earthing Inbuilt	Copper Earth bar with suitable bolts
33	Lightning Arrestor	At both Input & output side of the T/R unit
34	Lifting Hooks	4 Nos
35	Cable Entry	Bottom
36	Commissioning at site	By Vendor
37	Meters	1) Digital Meters (Three & Half Digits) for a) Input Voltage b) Input Current c) DC output voltage d) DC output current e) Reference voltage (P.S.P.) f) PSP on unprotected side of IJ
38	Alarm & Indication (Indication Lamp shall be Cluster LED type)	a) T/R UNIT ON/OFF (AC Supply ON) – Visible. b) Reference 1 lowest –Visual Reference 2 lowest – Visual Reference 3 lowest – Visual c) Reference 1 Fail – Visual Reference 2 Fail – Visual Reference 3 Fail – Visual d) Pipeline over protected – Visual & Remote e) Pipeline under protected – Visual & Remote f) Unit in Auto – Visual & Remote Unit in Manual – Visual & Remote g) DC output over current (Current Limit-Visual) h) All Reference Fail – Visual & Remote i) Current Interrupter Power ON, ON time & OFF time
39	SCADA Monitoring Facility	Signals / Contacts shall be provided for remote monitoring & control as per cl. No. 6.6 of specification MEC/TS/05/E9/082A.
40	Current interruption Facility	Current interruption facility will be provided by means of a built-in Electronic Interrupter logic & microprocessor based digital timer with real time clock & ON/OFF time display. The timer will have facility for adjusting the ON time & OFF time from 0 to 999 Sec. by means of digital setting facility. The timer will also have Start/stop facility thru a single external potential free contact. The Timer

		will have GPS Synchronisation facility. **GPS antennae to be included as part of supply of interrupters in CPTRs with minimum length of 10 mtr.**
	Protection	a) Lightning Arrestor on AC & DC Sides b) HRC fuses in input AC supply lines and in each DC leads c) Surge Diverters for diodes/SCRs :- Metal Oxide Varistors/Capacitors/R-C Networks d) Surge suppressors on input, output and across each diode and SCR (Power Transistors). e) Adjustable current limit, overcurrent and short-circuit protection. f) HRC fuses outgoing DC +ve lead and the DC –ve lead. g) MCB/MCCB in AC I/P (2-Pole). h) MCB/MCCM in DC O/P (2-Pole). i) Fast acting electronic over current limit circuit. j) Glass cartridge fuses in live line of all lamps, auxiliary power line to control circuit. Note-Electronic earthing for PLC/Modules shall be provided separately (Other then equipment earthing)

ANNEXURE – I A

1	**Guaranteed Technical Particulars**	
1.1	Efficiency:	
	At 10% Load	
	At 25% Load	
	At 50% Load	
	At 75% Load	
	At 100% Load	
1.2	Voltage regulation (from zero to 100% load variation and throughout the output voltage range) Better than ±0.25V	
	Manual mode	
	Auto mode	
1.3	Output ripple at full load current (less than 5% RMS)	
	At 10% output voltage	
	At 100% output voltage	
2	Inspection	16 hour heat run test & routine test shall be witnessed by MECON/Owner at manufacturers work. Final integrated field testing shall be done at site.
3	Combined	Combined load test at site.

Note- Various Settings of CP unit for Zn ref electrode will be differ from conventional Cu-Cuso4 ref electrode, Bidder shall submit the data sheet of the CP unit for approval before manufacturing of CP unit considering the Constant conversion factor of -1.1v to CuSO4.

ANNEXURE-II

ACCEPTABLE MAKES FOR COMPONENTS

S.No.	Material	Make
1	Contactors	Siemens/ L&T/ BCH/ Telemechnique
2	Moulded Case Circuit Breaker	GE/ Cromption/ L&T / Hager
3	Miniature circuit breaker	MDS/ Indoasian/ Havell / Hager
4	Transformer	Indcoil/ Kappa Electrical/ AE
5	Switches, Fuses, Fuse base	Siemens/ L&T/ GE / Kaycee/Salzer
6	PB Elements/ Indication Lamps	Siemens / L&T / Teknic / Concord/ BCH
7	Selector Switch	EE/ Siemens/ Kaycee/ L&T
8	Terminals	Elmex/ Connect Well/ Phoenix
9	Meters	AEP/ Simco/ IMP/ GEC/ Rishab/Meco
10	Cable Glands	Commet/ Baliga / Flexpro/ Sudhir
11	Soil Resistivity Meter	Make : MC Miller 400D or equivalent

(List of suppliers for solid-state devices shall be furnished by the vendor for Owner's approval).

(1)	HRC Fuses	(13)	Lightning Arrestor
(2)	Auxikary Fuses	(14)	Blade Resistance
(3)	Interrupter Contractor	(15)	Potentio Meter
(4)	DC – DC Converter Power Transistors	(16)	LED's
(5)	Volt Meter (Digital) 3 1/2	(17)	Convertors (4 to 20 ma)
(6)	Ammeter (Digital) 3 1/2	(18)	Timer (Interrupter)
(7)	Shunt	(19)	All electronic (AC DC)
(8)	Filter Choke in DC Output	(20)	Display Board
(9)	Filter Capacitor bank in DC Output	(21)	Filters
(10)	Power Diode	(22)	Links
(11)	Diode		
(12)	Search Suppressor Network		

-x-x-x-

TECHNICAL SPECIFICATION FOR ELECTRICAL WORKS

REV: 0
EDITION: 3

TECHNICAL SPECIFICATION

FOR

DIESEL GENERATOR SET

DOCUMENT No.: MEC/05/E9/TS/04A

Prepared & Issued by

ELECTRICAL SECTION
(Oil & Gas SBU)
MECON LIMITED
(A Govt. of India Undertaking)
13th& 15th Floor, North Tower, SCOPE MINAR,
Laxmi Nagar District Centre,
Delhi-110092 (India)

@MECON Limited; all rights reserves

MECON LTD, Delhi

INDEX

Sl. No.	Description	Page No
01.00	INTENT	4
02.00	CODES AND STANDARDS	4
03.00	GENERAL REQUIREMENTS	5
04.00	DIESEL GENERATOR DESIGN AND CONSTRUCTION REQUIREMENTS	6
05.00	GENERATOR CONTROL PANEL DESIGN AND CONSTRUCTION REQUIREMENTS	12
06.00	TECHNICAL REQUIREMENTS OF BATTERY CHARGER	14
07.00	SYSTEM OPERATION	16
08.00	INSPECTION AND TESTING	17
09.00	PACKING AND DISPATCH	20
10.00	DIESEL ENGINE	21

MECON LTD, Delhi

Rev	Date	Prepared by	Checked by	Approved by
0	11.07.2025	Chirosmita Banerjee	Saurabh Singh	Pankaj Shrivastava

© Copyright MECON Limited – All rights reserved.
THIS DOCUMENT IS THE SOLE PROPERTY OF MECON AND ISSUED FOR THE SPECIFIC PROJECT MENTIONED HEREIN. THIS IS NOT TO BE COPIED OR USED FOR ANY OTHER PROJECTS UNLESS EXPLICITLY PERMITTED BY MECON.

@MECON Limited; all rights reserves

AMENDMENT STATUS

(OLD NUMBER OF STANDARD: MEC/TS/05/E9/04A)

Sl. No.	Clause / Paragraph / Annexure / Exhibit / Drawing Amended	Page No.	Revision	Date	By (Name)	Verified (Name)
1	Document Number replaced with New number as **MEC/05/E9/TS/04A**	All	Rev 0/ Ed 3	11.07.2025		
2	Section re-name as Electrical Section (Oil & Gas SBU) Delhi	All	Rev 0/ Ed 3	11.07.2025		

MECON LTD, Delhi

@MECON Limited; all rights reserves

1.0 INTENT

The intent of this standard specification is to define the general requirements for design, manufacture, assembly and testing at manufacturer's works, packing, transportation and receipt at site with all materials and accessories of Diesel Generator.

2.0 CODES AND STANDARDS

The equipment shall comply with the requirements of latest revision of following standards issued by BIS (Bureau of Indian Standards), unless otherwise specified:

IS 5	Colours for ready mixed paints and enamels
IS 1248	Direct acting indicating analogue electrical measuring instruments and their accessories
IS 2253	Designation for types of construction and mounting arrangement of rotating electrical machines
IS 3700 : Part 7	Essential ratings and characteristics of semiconductor devices - Part VII : Reverse blocking triode thyristors
IS 3715 : Part 4	Letter symbols for semiconductor devices: Part 4 Thyristors
IS 4889	Methods of determination of efficiency of rotating electrical machines
IS 5469	Code of Practice for the use of semiconductor junction devices
IS 6362	Designation of methods of cooling of rotating electrical machines
IS 7132	Guide for marking of insulated conductors
IS 7306	Methods of determining synchronous machines quantities from tests
IS 7372	Lead acid storage battery for motor vehicle
IS 7816	Guide for testing insulation resistance of rotating machines
IS 8623	Specification for low voltage switchgear and control gear assemblies
IS 12021	Control transformers for switchgear and control gear for voltages not exceeding 1000V AC
IS 12075	Mechanical Vibration of rotating electrical machines with shaft heights 56 mm and higher - Measurement, evaluation and limits of vibration severity
IS-13364 Part 1	AC generators driven by reciprocating internal combustion engine: Part 1 Rated up to 20kVA
IS-13364 Part 2	AC generators driven by reciprocating internal combustion engine: Part 2

@MECON Limited; all rights reserves

MECON LTD. Delhi

Rated above 20kVA and upto 1250kVA

IS 13703	LV fuses for voltages not exceeding 1000V AC or 1500V DC
IS 14901	Semiconductor devices - Discrete devices and integrated circuits IS/IEC
60034-1	Rotating electrical machines : Part 1 - Rating and performance
IS/IEC 60034-5	Rotating electrical machines : Part 5 - Degrees of protection provided by the integral design of rotating electrical machines (IP CODE) - Classification
IS/IEC 60034-8	Rotating electrical machines : Part 8 - Terminal markings and direction of rotation
IS/IEC 60529	Degree of protection provided by enclosures (IP code) IS/IEC
60947	Low voltage switchgear and controlgear

In case of imported equipment, standards of the country of origin shall be applicable, if these standards are equivalent or stringent than the applicable Indian standards.

The equipment shall also conform to the provisions of Indian Electricity rules and other statutory regulations currently in force in the country.

In case Indian standards are not available for any equipment, standards issued by IEC/BS/VDE/IEEE/NEMA or equivalent agency shall be applicable.

In case of any contradiction between various referred standards/specifications/data sheet and statutory regulations the following order of priority shall govern:

-Statutory regulations
-Data sheets
-This specification
-Codes and standards

However, the vendor shall bring any such contradiction to the notice of Purchaser for prior approval.

03.00 GENERAL REQUIREMENTS

The offered equipment shall be brand new with state of art technology and proven field track record. No prototype equipment shall be offered.

Vendor shall ensure availability of spare parts and maintenance support services for the offered equipment for at least for 15 years from the date of supply.

Vendor shall give a notice for at least one year to the Purchaser of equipment before phasing out the product/spares to enable the Purchaser for placement of order for spares and services.

Unless otherwise specified, the diesel generator package shall be complete with

@MECON Limited; all rights reserves

a) Alternator with brushless excitation system complete with AVR.

b) Generator Control Panel to include AMF-PLC system and auxiliary devices. This panel shall also include generator breaker and generator protection relays if specified in the data sheet.

c) Engine starting battery and charger shall form a part of a package involving a Diesel Engine as Prime Mover. It shall be completely integrated with and suitable for the engine starting power requirements.

d) Any other part/ accessories not specifically mentioned above but considered necessary for safe and reliable operation

SITE CONDITIONS

The diesel generator, associated electrics, engine starting battery and charger shall be suitable for installation and satisfactory operation in indoor or outdoor installation with humid and corrosive atmosphere as specified in data sheet.

The diesel generator, associated electrics, engine starting battery and charger shall be designed to operate under site conditions as specified in the data sheet. If not specifically mentioned therein, a design ambient temperature of 40°C for indoor or 50°C for outdoor and an altitude not exceeding 1000metres above mean sea level shall be considered.

The specified design ambient temperature shall be considered outside the enclosure for machines having acoustic enclosure.

The diesel generator, associated electrics, engine starting battery and charger described in this specification are intended for continuous duty at the specified ratings under the specified site conditions.

04.00 DIESEL GENERATOR DESIGN AND CONSTRUCTION REQUIREMENTS

Performance

Name Plate Rating and Duty

Generator nameplate rating indicated in the data sheet is the continuous apparent power output (kVA) of the set at the design ambient temperature.

For machines having acoustic enclosure, vendor shall account for temperature rise inside the enclosure during full load operations. The enclosure ventilation system shall be designed along with the proposed alternator model so as to generate the rated power while operating inside enclosure and with the specified maximum ambient temperature to be considered out side the enclosure.

Generator shall operate in case of failure of the main grid system for a relative short period (of the order of a few hours depending on restoration of power.)

@MECON Limited; all rights reserves

Transient voltage performance

a) Transient voltage behavior of machine shall conform to the VG3 grade specified in IS 13364.

b) The generator shall operate satisfactory under sudden load rejection up to full load.

Voltage Regulation

The voltage regulation of the machine shall be within ± 2% of the nominal voltage under following conditions:

Between no load and nominal load with p.f. of 0.8 lag to unity, with the machine cold or warm and at a speed drop of approximately 3% of the nominal speed.

Voltage setting range

The generator terminal voltage shall be adjustable with a continuously variable potentiometer. The adjustment range shall be ± 10% of the nominal voltage. Motorized potentiometer shall be provided where remote control of voltage is envisaged as per data sheet.

Unbalanced Load

The generator shall be capable of withstanding without injury the effects of a continuous current unbalance corresponding to a negative-phase sequence current of 8% of the rated current for cylindrical rotor machines and 10% for salient pole machines provided none of the phase current exceeds rated current.

Waveform Distortion

For machines rated upto 1250kVA, harmonic distortion factor shall not exceed the values given in the IS-13364-Part 2. For machines above 1250kVA, telephone harmonic factor as per IS/IEC 60034-1 shall be applicable.

Frequency limits

The generator shall be suitable for continuous operation at rated load for a frequency variation of ± 3% of rated value.

Over Current (Occasional excess current) Requirement

For machines rated up to 1250kVA, generator shall be capable of withstanding momentary excess current as per IS-13364. For machines rated above 1250kVA, stipulations of IS/IEC 60034-1 shall be applicable.

Short circuit conditions

The generator shall be capable of withstanding without damage, three phase or a line to line or line to earth or two line to earth short circuit for a period of 3 seconds when operating at rated speed and rated load and with an excitation corresponding to 5% over voltage.

Parallel Operation

@MECON Limited; all rights reserves

Where specified generator and associated electrics shall be suitable for parallel operation amongst them, or with other generating sets or with other sources (Grid supply) at operating voltage and under the load conditions up to rated value and with the generator neutral solidly earthed.

Excitation support system

Excitation system shall be provided with short circuit support equipment to maintain three times the rated current for three seconds in case of short circuit to ensure proper fault clearance in outgoing feeders.

Construction

General

a) The generator shall be mounted on a common base frame together with prime mover unless otherwise agreed. The generator shall be provided with necessary lifting hooks and two earth terminal on opposite sides for connection to main earth grid.

b) Generator enclosure protection class shall be as specified in the data sheet.

c) The direction of rotation of the rotor of the machine shall be compatible with that of the prime mover. A clear indication of the direction of rotation shall be given on either end of the machine Space heaters shall be installed within the enclosure. Location and maximum surface temperature of the heaters shall be such that no damage can be caused to any insulation.

Heaters shall be suitable for operation on a single-phase 240 V AC supply unless otherwise specified

d) All cabling on the generator skid shall be in GI perforated cable trays / conduits. All cables shall be identified close to their termination point. Double compression type cable glands shall be used for cable termination

e) Generators rated above 500kVA shall be supplied with REF CT, unless otherwise specified in the data sheet.

f) Differential CTs shall be provided if specified in the data sheet.

g) All parts and accessories shall be suitable to withstand stresses due to over speed / over load / short circuit conditions as specified.

Windings and Insulation

a) Various generator windings (stator, rotor of main generator, Exciter) shall be designed having insulation class:-

i) Either class ‘F’ with temperature limitation for class ‘B’

Or

ii) Class ‘H’ with temperature limitation for class ‘F’.

@MECON Limited; all rights reserves

b) The windings and overhangs shall be braced to withstand the short circuit forces. Machines rated 1000kVA and above shall have minimum six nos. RTDs (one per phase between the coil sides to measure winding temperature and one per phase at the base of lots to measure core temperature, each placed at 120° apart.)

c) The stator winding shall be star connected and all windings shall be brought out of (3+3) insulated terminals in a terminal box with provision of CTs as per details given in the data sheet.

d) Field winding shall have insulation class and temperature limitations as per Para a) above. The field winding shall be capable of operating at 125% of rated field voltage for at least one minute starting from hot initial condition, i.e. stabilized temperature at rated load conditions.

(Rated field voltage is the voltage applied at the field winding for producing rated terminal voltage at rated load and speed.)

Bearings

a) Bearings shall be grease lubricated ball or roller bearing or of the manufacturers standard type. In all cases the bearings shall be chosen to given a minimum L-10 rating of 5 years (40,000hrs.) at rated operating conditions.
Grease lubricated bearings shall be capable of grease injection from outside without removal of covers. The bearing boxes shall be provided with labyrinth seals to prevent those shall be associated, where necessary, with appropriately located relief devices which ensure passage of excess grease through the bearings.

b) Sleeves type bearing shall either be ring lubricated, depending on the loading. Sleeve bearing shall be of proven track record (PTR). While offering sleeve bearings, list of past supplies shall be furnished.

c) With forced oil lubrication system the oil inlet and outlet of generator bearings shall be connected to the oil supply system. Preference shall be given to central system from which oil to the bearings of driver is also supplied.

Excitation System

The generator shall be self-exciting, i.e. it shall generate its nominal voltage without the use of external power sources, even after long idle periods or after a short circuit. The generator shall be provided with brushless type solid state self-excitation system with automatic voltage regulator. The excitation system shall include the automatic voltage regulator, AC exciter and rotary rectifier.

The field of the exciter shall be fed from the stator winding and AVR. AC voltage generated in the AC exciter shall be rectified by the rotary rectifier assembly and fed to the main field circuits. The rotor winding of the AC exciter, the rectifier assembly, main field winding of the generator and other accessories on rotor parts shall be rigidly fastened to the shaft and the connection with different items shall be anti-loosening type. The exciter capacity shall be at least 20% more than the maximum requirement at any time. The exciter winding shall be insulated as per Para 5.2.2 above.

The rotary rectifier set shall consist of rectifiers, zener diodes, fuses, field discharge resistors,

@MECON Limited; all rights reserves

condensers, etc. Rotor circuit shall be designed to take care of rectification of AC voltage and for proper field suppression through discharge resistors. The rating of the Diode Bridge and armature shall be such that the full load rated current can be supplied with one branch in operation.

All components shall be mounted considering the effects of the centrifugal forces.

Automatic solid-state voltage regulator (AVR) shall be provided with the following features as minimum:

a) Short circuit protection

b) Manual voltage control

c) Voltage build up circuitry

d) Over voltage protection

The AVR can be installed either in the generator control panel or at the generator. In later case the AVR shall be located in a separate housing or in a clearly segregated section of the main terminal box.

Terminal Boxes and Terminations

The terminal boxes and cubicle shall have space for the termination of quantity of cable or bus duct as specified in the data sheet.

Where main terminal box does not have sufficient space for accommodating CTs for protection, a separate cubicle shall be provided by vendor, irrespective of the machine rating. In such case connection shall be brought to the cubicle, using cable/ bus duct connection of sufficient ratings. Apart from accommodating CTs, formation of star point and neutral tee off point shall be achieved in this cubicle. Outgoing power cable connection to Purchaser's power distribution board shall also be done in this cubicle.

Generators rated 1000kVA and above shall be provided with a separate neutral terminal box in addition to main terminal box. Line side and neutral side connection shall be brought to the respective line and neutral cubicles using cable/ bus duct connection of sufficient rating. Line side cubicle shall also contain suitably rated generator breakers, if specified in the data sheet. Neutral cubicle shall contain various CTs for protection.

Separate terminal boxes of sturdy construction shall be provided for Space Heater and other devices like RTD's with sufficient space for connecting the cables as indicated in the data sheet.

All terminals shall stud type. The terminal boxes/ cubicle shall be complete with tinned copper lugs and single compression nickel plated brass cable glands for the quantity and type of power cables as specified in the data sheet. Where single core cables are specified, gland plates shall be of non magnetic material (Stainless Steel or Aluminum)

Engine Starting Battery

The batteries shall be lead acid, high discharge automotive type conforming to IS 7372 and suitable for engine starting duty. The battery containers shall be of high quality translucent plastic/

@MECON Limited; all rights reserves

hard rubber. Terminal posts shall be properly sealed to prevent electrolyte leakage. Venting device shall anti-splash type. Batteries shall be placed on battery stands made of steel with suitable PVC coating. All accessories like cell insulators, connector, stand insulators etc. shall be supplied with each set. All hardware shall be suitably coated / plated to prevent corrosion.

Ampere-hour capacity of the battery shall be selected based on the load cycle (to be decided by the vendor.). Ageing factor of 0.8 and temperature correction factor for specified minimum temperature shall be considered for sizing. The battery capacity shall be adequate for six consecutive starts of the engine under cold engine conditions without recharging with an additional 10% spare capacity. All auxiliary loads for engine controls shall also be considered while defining the load cycle.

The battery shall be suitable for being quick charged from a fully discharged condition to a fully charged condition within 10-14 hours.

The following accessories shall be provided for preventive and routine maintenance of the batteries at each location where the engine are to be installed.

a) 1 No. Hydrometer (syringe type)

b) 1 No. Thermometer

c) 1 No. Cell testing voltmeter with leads (Center zero type)

d) 1 Pair Rubber gloves

e) 1 No. Spanner

f) 1 No. Acid resistant jug and funnel

g) 1 No. Teak wood holder for the hydrometer.

Auxiliary Motors

All auxiliary motors shall be three phase 415V or single phase 240V, 50 Hz squirrel cage type, min. IE2 Energy efficient class, suitable for DOL starting. Insulation class shall be 'B' unless other wise specified. All motors shall have IP-55 enclosures and shall conform relevant Indian Standards.

Noise

Statutory noise control requirements as applicable and as stipulated in the Mechanical Specification shall be adhered to.

Vibrations

The vibration severity and control as applicable and as stipulated in the Mechanical Specification shall be adhered to.

Critical speeds

The first actual critical speed of stiff rotors shall not be lower than 125% of the synchronous speed. For flexible rotors, this shall be between 60% and 80% of the synchronous speed. The second

@MECON Limited; all rights reserves

actual critical speed shall be above 125% of the synchronous speed.

Earthing

Two earth terminals preferably located on diametrically opposite side shall be provided. The size of each earth terminal shall be suitable for termination of specified earthing cable size. Necessary nuts and spring washers shall be provided for earth connection.

An additional earth terminal shall be provided inside the main terminal box unless specified.

Name plate

A rating plate of stainless steel shall be fixed on the generator frame and shall give the information as per IS/IEC 60034-1.

Painting

Internal and external parts of the casing and all metal parts including the enclosure likely to come in contact with the surrounding air shall be protected with anti acid paint that will resist the specified site conditions. All external surfaces and its enclosure shall be given a coat of epoxy based paint. External paint shade shall be as specified in the data sheet

05.00 GENERATOR CONTROL PANEL DESIGN AND CONSTRUCTION REQUIREMENTS

General Design

The generator control panel for the generator shall include all interlock and controls for the generator and its auxiliaries and comprise of the following unless otherwise specified in the data sheet.

a) Local circuit breaker and generator protection relays, if specified.

b) Line Cubicle as applicable.

c) Neutral cubicle, as applicable, having protection CTs

d) Metering CTs and CT/ PTs for AVR

e) Metering equipment

f) Indicating Instruments

g) Synchronizing equipment, if specified.

h) Motor control gear section for generator auxiliaries.

i) Any other accessory necessary for generator operation

The generator control panel shall preferably be spilt into various functional sections viz. Line and neutral Power Section, Battery Charger section, Auxiliary Motor Control Gear Section, Metering

@MECON Limited; all rights reserves

MECON LTD, Delhi

and Control section and AVR section etc.

In case a generator breaker is required to be supplied, it shall form part of the line cubicle. The breaker rating shall be as specified in the data sheet. This breaker shall serve the purpose of local isolation. The breaker shall be in draw out execution. In case of 415V generators, breaker shall have four poles for isolation of phases and neutral.

All motor starters for DG set auxiliaries if required shall be 'direct-on-line' type in fixed execution.

The battery charger with rated power out put in excess of 1000W (i.e. for rating more than 40Amps at 24V) shall be 3 phase full wave type and shall conform to specification for battery and charger system.

Numerical relay with Modbus TCP/IP protocol shall be provided in case generator breaker is supplied.

Construction

The generator control panel shall be free standing, metal enclosed fabricated with cold rolled sheet steel of 2mm thickness, dust and vermin proof type with a hinged door and having a degree of protection IP 41 unless otherwise specified. Power and control equipment shall be segregated inside the panel as far as practicable.

The maximum height of the operating handle /switches shall not exceed 1800mm and the minimum height not below 300mm.

All hardware shall be corrosive resistant and bolts; nuts and washers shall be made of galvanized, zinc passivated or cadmium plated high quality steel.

Unless otherwise specified the panel shall be suitable for bottom cable entry. Necessary removable type underlined gland plate; double compression cable glands and cable lugs shall be provided with the panel.

All auxiliary devices for control, indication, measurement and alarm such as push button control/selector switches, indicating lamps, metering instruments, annunciations etc. shall be mounted on the front door of the panel. Adequate number of potential free contacts shall be provided in the control panel for any remote control, monitoring of the generator.

All switches shall be load-break, heavy-duty type. All fuses shall be non-deteriorating HRC cartridge pressure fitted, link type. The contactors for auxiliary motor starters shall be of air – break type having AC-3 duty rating. Thermal overload relays shall be three element, positive acting, ambient temperature compensated type with adjustable setting range and built in protection feature against single phasing.

All indicating instruments shall be moving iron, flush mounting type and of 72mm x 72mm. square pattern. As an option, vendor may offer digital meters.

All control / selector switches shall be rotary back-connected type having a cam-operated contact

@MECON Limited; all rights reserves

mechanism with knob type handle. 'Stop' push buttons shall be stay-put type.

Wiring for power, control and signaling circuits shall be done with 660V grade PVC insulated copper conductors. Minimum size of control wires shall be 1.5mm^2 . Clamp type terminals shall be acceptable for wires up to 10mm^2 size and for conductors larger than 10mm^2 bolted type terminals with crimping lugs shall be provided. A minimum of 20% spare terminals shall be provided on each terminal block. redundant

The panels shall be provided with space heaters to prevent moisture condensation. The space heater shall be located in the bottom part of each panel and shall be supplied from 240V AC auxiliary bus for space heater. The space heater shall be provided with a thermostat having adjustable setting and double pole miniature circuit breaker

50 × 6mm^2 Aluminum or equivalent copper earth bus shall be provided in the panel for connection to the main earth grid. All non-current carrying metallic parts of the mounted equipment shall be earthed. Doors and movable parts shall be earthed using flexible copper connections.

Engraved nameplates shall be provided for all devices mounted on the front of the panel. Nameplate or polyester adhesive stickers shall be provided for each equipment mounted inside the panel.

All metal surfaces shall be thoroughly cleaned of scale, trust and grease etc. prior to painting. Cleaned surfaces shall be given two coats of primer and prepared for final painting. Final finish shall be free from all sorts of blemishes with colour as specified in the data sheet.

06.00 TECHNICAL REQUIREMENTS OF BATTERY CHARGER

The charger shall be suitable for both float charging the battery while feeding all loads, other than engine starting motor, as well as for quick charging the battery from fully discharged condition within 10-14 hours. The sizing of the battery charger shall be based on the maximum continuous rating required to meet the above conditions with an additional 20 % spare capacity. All DC loads for engine controls and continuously operating auxiliaries shall also be considered for this purpose.

The charger shall be of solid state design, constant voltage and current limit type. The output voltage shall be stabilized to ±1% for mains variation of ± 10% and load variation of 0 to 100 %. Each load shall be fed through a separate independent feeder. However, a separate DC Distribution Board is not essential for this purpose and the outgoing feeder circuits can form a part of the charger panel.

The charger shall have a 3 phase full wave controlled rectifier consisting of thyristors, communication circuits, diodes etc. and their protective devices. A suitable filter circuit shall be provided at the rectifier output to obtain a smooth output voltage. The maximum ripple content in the charger output voltage shall be lower than the safe value recommended by battery manufacturer, and in any case, shall not exceeds 5 % with battery disconnected.

The charger shall have auto as well as manual control facility through a lockable selector switch.

@MECON Limited; all rights reserves

Auto Mode

In the auto mode, the charger shall automatically control the battery charging current/ voltage to ensure optimum quick charging of the battery. After completion of boost charging, the charger shall switch to float charging mode without any manual intervention.

Manual Mode

In the Manual mode, it shall be possible to charge the battery at any desired current, which is safe for the battery. Fine control of the output voltage / current shall be possible.

In both Auto and Manual modes, the battery charging current shall be limited to a safe value as prescribed by battery manufacturer by means of adjustable potentiometer control. A back up timer of 0-24 hrs range with no-volts hold feature shall be provided for switching the charger from quick charging to float charging mode after the set time, under any mode of operation.
The charger shall be complete with all interconnections within the panel. All connections shall be made using 660V grade copper conductor PVC insulated wires/ cables with BIS marking for both power and control connections. Minimum 1.5mm^2 conductor size shall be used for control connections. However, control wiring for electric circuits/ components may use flat ribbon cable or copper wire of minimum 0.5 mm diameter. All control wiring shall be enclosed in PVC channels or otherwise neatly bunched together. Each wire shall be suitably identified at both ends by PVC ferrules. Crimping type lugs shall be used for termination.

All main and control transformer shall be natural air cooled, dry type suitable for location inside a panel. All semiconductor devices shall be natural air cooled with absolute case temperatures limited to 75°C at highest load and ambient temperature. PCBs shall be of copper clad glass epoxy laminate construction. PCB tracks shall be tinned and solder masked. PCBs shall be tropicalised to render them immune to dust, moisture and fungal growth.

Selection, sizing and suitability of all components used for various applications shall be vendor's responsibility and the rating of components shall be increased, if required, to suit associated components during execution of the order without any claim for extra price or time. All electronic power devices including thyristors, transistors, diodes etc. shall be rated under operating conditions for at least 150% of the maximum current carried by the device, All electrical components such as transformers, reactors, contractors, switches , busbars etc. shall be rated for a least 125% of the maximum required rating. No electric device shall experience a PIV (Peak Inverse Voltage) greater than 50% of its rated value. Series –parallel combination of smaller devices to achieve specified rating shall not be acceptable.

A suitably sized earth bus of minimum size 25 × 3mm^2 copper shall be provided at the bottom of the panel with provision to connect it to the owner's main earth grid at both ends.

The charger shall be suitably housed in a 1.6/2mm thick sheet enclosure having minimum IP-41 degree of ingress protection. The panel shall be free standing, floor mounted type with hinged doors and shall be suitable for bottom cable entry. The maximum and minimum operating height shall be 1800mm and 300mm respectively. Eyebolts shall be provided on the top cover for lifting. When removed, the eyebolts should not leave any openings in the panel.

@MECON Limited; all rights reserves

The charger panel surface shall be properly pretreated for final painting with 2 coats of epoxy paint. External paint shade shall be as specified in the data sheet. Epoxy based coating of adequate thickness for rugged industrial use shall also be acceptable.

Nameplates shall be anodized aluminum or stainless steel.

The charger shall be provided with the following features:

Controls
- Auto / Manual selector switch
- ON/ OFF switch for incoming power supply
- Float / Quick charging selector switch
- Potentiometer for coarse and fine control of output voltage
- Backup Timer.

Protection
- Fault protection on input and output circuits
- Suitable semiconductor fuses for all thyristors and semi conducting power devices.

Metering
- AC input voltmeter and ammeter with selector switch
- DC out put voltmeter and ammeter

All meters shall be of 72mm square size with accuracy class 1.5

Indication
- AC power ON (3 Lamps)
- Charger in 'Float Charging' condition (Yellow)
- Charger in 'Quick Charging ' condition (Green)
- Charger failure (Amber)

Indicating lamps using Clustered / Jumbo LEDs in place of filament lamps can also be accepted. In addition, facility for remote indication of AC and DC failure shall be provided

07.00 SYSTEM OPERATION

Modes of operation

The generator and associated electrics shall normally be in an unattended area. The control system shall be suitable for unattended operation. The control system shall operate in fail-safe mode and shall include all controls and protection necessary for the safe operation of the DG set. The generator and associated electrics shall function as per the following schemes:

Auto start on mains failure scheme (AMF)

This shall be effective in Auto position of Auto / Manual selector switch located in local control panel. The generator shall normally be at rest. Upon failure of normal supply, a start impulse (in the form of change over of a dry contact.) shall be provided by others. Using this impulse, generator shall start automatically and rated speed and voltage shall be built up. Once the voltage

@MECON Limited; all rights reserves

MECON LTD, Delhi

monitoring relay senses generator healthy voltage, an impulse shall be given for closing of generator breaker or contractor.

All accessories required for starting and completion of various sequences of operation for the above purpose shall be provided as part of generator

The operation and control philosophy for the DG set at different installations location is provided in the appendix-1,2 & 3.

DG set vendor shall comply to the all requirement provided in the operation and control philosophy. All the equipments required to meet the operation and control philosophy shall be provided by DG vendor.

Starting Time

Unless specified otherwise, the total time from the receipt of the starting impulse for the generator till the set reaches rated speed and generator reaches rated voltage shall not be more than 30 seconds. If this time is exceeded, an annunciation in the local control panel shall be provided with a facility for repeat annunciation in Owner's panel.

Black start facility

The generating unit shall be provided with all necessary black start facilities. External power at 415V/240V, TPN/SPN shall be made available by purchaser, at one point for battery charging or any other auxiliary equipment operation during stand-still period of generator. This power shall not be available during start-up of the generator.

DC control supply

All DC power supply required for DG package shall be met by DC system consisting of battery and battery charger of suitable capacity to be supplied by the DG set vendor.

During stand still period of DG set, charger of DC supplies shall be energized from the 415V / 240V feeder provided by purchaser.

08.00 INSPECTION AND TESTING

During fabrication, diesel generator, associated electrics, engine starting battery and charger shall be subject to inspection by Purchaser or by an agency authorized by the Purchaser. Vendor shall furnish all necessary information concerning the supply to Purchaser. The Purchaser shall have free access to the Vendor's works for the purpose of inspecting the process of manufacture in all its stages and he will have the power to reject any material, which appears to him to be of unsuitable description or of unsatisfactory quality.

Diesel generator, associated electrics, engine starting battery and charger shall be tested in accordance with applicable standards and approved ITP's. All acceptance and routine tests as follows shall be carried out at Vendor's work under his care and expense. Vendor's internal test reports shall be provided for Purchaser's review prior to inspection and testing.

@MECON Limited; all rights reserves

Routine tests on Generator as follows

a) Measurement of winding resistance

b) Insulation resistance test

c) Phase sequence test

d) Regulation test

e) Measurement of open circuit characteristics

f) Measurement of short circuit characteristics

g) Dielectric test

h) Measurement of bearing currents for generators above 1000kW

i) Pressure test on coolers for closed circuit cooling

j) Vibration test

Routine tests on Generator control panel as follows

a) Operational and functional tests.

b) Measurement of resistance of main circuit

c) Insulation resistance of main, auxiliary and control circuit before and after HV test

Power Frequency Voltage withstand test on main, auxiliary and control circuits

Acceptance and routine test on batteries

a) Physical examination

b) Polarity and absence of short circuit

c) Marking and packing

d) Verification of dimensions

e) Air pressure test

f) Test for voltages during discharge

g) Test for AH capacity

h) Test for charge retention if specified in the data sheet.

i) Insulation resistance

Acceptance and routine test on each charger

a) Functional tests

@MECON Limited; all rights reserves

MECON LTD, Delhi

b) Insulation test

c) Burn-in test on electronic circuits for 96 hours at 50°C at a voltage varied between the maximum and minimum supply voltage.

d) Heat Run test at rated load and minimum supply voltage shall be carried out on each charger for a period not less than 8 hours. During the test, the temperature of electronic power devices should stabilize and remain constant for 1 hour, or the rest shall be suitably extended until this is achieved

e) Constant output voltage

f) Constant output current limit

g) Parallel operation (if applicable)

h) Efficiency measurement

i) Noise

Type tests as follows shall be performed at Vendor's work or independent approved testing laboratory under his care and expense. Type test certificates approved by CPRI or equivalent approved testing agency may be acceptable in lieu of actual type tests on identical diesel generator, associated electrics, engine starting battery and charger subject to Purchaser approval.

Type tests on Generator as follows

a) Measurement of leakage reactance

b) Efficiency test

c) Temperature rise test

d) Occasional excess current test

e) Over speed test

f) Determination of deviation of voltage waveform from sinusoidal

g) Short circuit withstand test and measurement of reactance and time constants for generators above 1000kW

Type tests on Generator control panel as follows

a) Short circuit making and breaking tests

b) Temperature Rise Test

c) Degree of protection

d) Impulse and Power Frequency Withstand

@MECON Limited; all rights reserves

MECON LTD Delhi

e) Short circuit test duties

f) Internal Arc Test

Type tests on batteries

Long duration discharge test

Type tests on charger

Acceptance, routine and type tests shall be witnessed by Purchaser or an agency authorized by the Purchaser. Prior notice of minimum 4 weeks shall be given to the Purchaser for witnessing the tests.

For equipment bought from other sub-suppliers, certified test reports of tests carried out at the sub-supplier's works shall be submitted. Normally all routine tests as specified in the relevant standards shall be conducted by the sub-supplier at his works.

09.00 PACKING AND DISPATCH

All the equipment shall be divided into several sections for protection and ease of handling during transportation. The equipment shall be properly packed for selected mode of transportation i.e. by ship/ rail or trailer. The equipment shall be wrapped in polythene sheets before being placed in crates / cases to prevent damage to finish. Crates/ cases shall have skid bottom for handling. Suitable lifting lugs etc. shall also be provided and lifting points shall be clearly marked on the package. Special notations such as 'Fragile', 'This side up', 'Center of gravity', 'weight, owner's particulars (PO nos.) etc., shall be clearly marked on the package together with other details as per purchase order.

The equipment may be stored outdoor for long periods before installation. The packing shall be completely suitable for outdoor storage in areas with heavy rains/ high ambient temperature unless otherwise agreed.

MECON Ltd. Delhi

@MECON Limited; all rights reserves

DIESEL ENGINE

CODES AND STANDARDS

Mechanical Equipment shall meet the requirements of the following codes, regulations and standards, as applicable, except as superseded herein. In cases where more than one code, regulation, or standard apply to the same condition, the most stringent shall be followed. In the event of a conflict between the below mentioned codes & standards and project specifications or correspondence, the PURCHASER shall be consulted and a ruling, in writing, shall be obtained before any work is started.

Standard No.	Standard Title
ISO:3046-1, 2002	Reciprocating Internal Combustion Engines - Performance Part 1: Declarations of power, fuel and lubricating oil consumptions and test methods. Additional requirements for engines for general use
ISO:3046-3, 2006	Reciprocating Internal Combustion Engines - Performance Part 3: Test measurement
ISO:3046-4, 2009	Reciprocating Internal Combustion Engines - Performance Part 4: Speed governing
ISO: 3046-5, 2001	Reciprocating Internal Combustion Engines – Performance Part 5: Torsional vibrations
ISO: 3046-6, 1990	Reciprocating Internal Combustion Engines – Performance Part 6: Over speed protection
ISO: 8528-1, 2018	Reciprocating- Internal Combustion Engine driven alternating current generating sets, Part 1: Application, ratings and performance
ISO: 8528-2, 2005	Reciprocating Internal Combustion Engine driven alternating current generating sets, Part 2: Engines
ISO: 8528-5, 2013	Reciprocating Internal Combustion Engine driven alternating current generating sets, Part 5: Generating sets
ISO: 8528-6, 2005	Reciprocating Internal Combustion Engine driven alternating current generating sets, Part 6: Test methods

@MECON Limited; all rights reserves

ASME	The American Society of Mechanical Engineering Boiler and Pressure Vessel Code, Section VIII Rules for Construction of Pressure vessels, and Section IX; Welding and Brazing Qualifications.
EEMUA	Engineering Equipment and Material User's Association Pub. No. 107 Recommendations for the protection of Diesel Engines for use in Zone 2 Hazardous area

TECHNICAL REQUIREMENTS

General

The engine selected shall be VENDOR's standard model after taking into consideration the requirement of the driven equipment transmission losses, site de-ration and power requirements of auxiliaries and other parasitic loads.

Standard reference conditions shall be as defined in ISO: 3046-1.

Definition of Terms

All the definitions as indicated in ISO: 3046 shall apply for Reciprocating Internal Combustion Engines.
All the definitions as indicated in ISO: 8528 shall apply for Reciprocating Internal Combustion Engine driven alternating current generating sets.

Rated Power Output and Specific Fuel Consumption

DIESEL ENGINE

The engine rating is the net shaft output in kilowatts, which the engine is capable of delivering continuously, between the normal maintenance intervals stated by the manufacturer, at the stated crankshaft speed and under stated ambient conditions assuming that the maintenance prescribed by the manufacturer being carried out. Diesel engine rating indicated by the manufacturer in the equipment data sheet shall be with no negative tolerance.

The engine shall be sized on the basis of continuous power rating & 50% step load. Prime power rating is not acceptable. Dg set shall be continuous power rated with continuous duty type. The engine shall be in line with ISO 8528-1.
Specific fuel consumption shall be indicated at 100% continuous rating. Specific fuel consumption at other loads (part loads) shall be as indicated in the respective engine datasheets. The tolerances shall be as per ISO: 3046-1.

@MECON Limited; all rights reserves

Diesel Engine Generating Set (DG Set):

The power of the DG Set is the power output available at the generating set terminals excluding the electrical power absorbed by the essential independent auxiliaries.

Power rating of the DG Set is the power output expressed in kilowatts at rated frequency and a power factor of 0.8 lagging unless otherwise stated. The DG set rating indicated by the manufacturer in the equipment data sheet shall be with no negative tolerance.

Engine Starting System

Unless otherwise specified, the type of starting arrangement shall be battery starting.

Engines shall be capable of starting without the use of cold starting aids for ambient temperatures of 2°C and above.

Where the engine is specified/ offered with battery starting arrangement, the starter motor shall be suitable for the specified electrical area classification. Where the engine is equipped with a dual starter, the synchronizing switch and the corresponding wiring/ connection with the starter motor shall be provided by the VENDOR.

Where the engine is specified/ required to start and/ or stop automatically the VENDOR shall provide the necessary controls (Automatic-cum-manual) in the engine panel, the interconnecting wiring, piping/tubing from panel to the engine and the starting/stopping equipment. A pilot lamp shall be provided in the starting equipment/control panel to indicate that the controller is in automatic position. In the event the engine does not start after three attempts the controller shall stop further cranking and operate the audio visual alarm.

For engines requiring pre-lubrication immediately before start-up, electric motor driven pre-lubrication pump connected to emergency power source with timer suitably interlocked with the starting system shall be provided by the VENDOR. Unless otherwise specified the emergency power source shall be provided by the VENDOR.

For engines which do not require pre-lubrication immediately before start but require periodic pre-lubrication to keep engine lubricated for automatic start, an AC motor driven pre-lubrication pump with automatic start-stop and timers, set for specific running time to provide pre-lubrication after pre-set periods of intervals shall be provided by the VENDOR.

For engines, which have only manual starting/stopping, a VENDOR's standard manual pre-lube pump shall be provided unless VENDOR does not recommend the same and proposes other means to be adopted for any pre-lubrication after prolonged shut down periods.

Engine Fuel System

The engine shall run on Diesel fuel (HSD).

@MECON Limited; all rights reserves

A fuel float (surge) tank shall be provided along with its interconnecting piping/hoses, in case fuel day tank is mounted above engine fuel connection level so as to ensure that the system does not permit gravity flow to the engine through fuel supply line during engine shutdown.
The fuel day tank as a minimum shall be equipped with vent piping with flame arrester, shielded level gauge, strainer and a hand hole of not less than 150 mm diameter besides the required fuel connections and a drain valve.

Fuel day tanks for diesel engine driving generator shall be located outside the DG room irrespective of the capacity/size of the fuel day tank.

Unless otherwise specified, the size of the fuel tank (day tank) shall be for six hours of engine operation at full load, limited to 990 litres.

Engine Jacket Cooling System

Engine jacket cooling system (primary circuit) shall be closed circuit liquid cooled type including circulating pump, expansion tank, heat exchanger, temperature regulating device, engine outlet cooling water temperature high alarm & trip device etc.

The heat exchangers for oil cooling and engine cooling shall be air cooled type i.e. Radiator type with engine driven fan. Potable water will be made available for make-up.

Radiator cooled engines shall be provided with a radiator mounted on the common base plate with engine driven radiator fan, temperature control valve, expansion tank, radiator guard and other necessary piping and valves.

Combustion Air Intake & Engine Exhaust System

The VENDOR shall prepare a layout drawing showing the layout and routing of air intake and engine exhaust piping/ducting and include in his scope complete piping/ducting, nozzles, expansion joints and supports as required as per his layout and routing.

The type and location of air intake filter shall be VENDOR's standard and shall be suitable for the climatic/environmental conditions applicable to the site of installation of the engine.

In case the filter is located outside the engine building/engine enclosure, VENDOR shall provide the following for the filter;

- Insect screen;
- Rain hood;
- Supporting structure with approach for maintenance.

The filter shall be suitably located to prevent exhaust gases getting into the intake air.

Exhaust gas discharge shall be located away from ventilation air intakes to prevent re-entry of

@MECON Limited; all rights reserves

offensive fumes and also should not cause discomfort to personnel or hazards to building or equipment.

Provision for inserting probe shall be provided by vendor, in the exhaust piping for monitoring air quality (as and when required).

Unless otherwise specified or required as per applicable statutory regulation, the height of the engine stack from the base of the engine room shall be as under;

$H = h + 0.2 * \sqrt{kW}$ Where,
H = minimum height of the exhaust from base, meter

h = height of engine room eves level from the base/heightof engine acoustic enclosure from the base-meter

kW = kW site rating of the engine, kW.

Governing

Unless otherwise specified in the equipment data sheets, the engine shall be provided with Class G2 governing as per ISO 8528-5.

In case engines are required to drive generators in parallel, the governor - fuel injection pumps provided shall have identical characteristics.

Noise and Exhaust Gas Emission

Unless otherwise specified any applicable legislation/statutory requirements relating to the protection of environment and to the health and safety of personnel, with regard to noise and exhaust gas emission, as applicable to the place of installation shall be fully complied with by the engine manufacturer.

In case of diesel engine generating sets, the DG set VENDOR shall also be responsible for complying to the requirements specified in any applicable official Gazette Notifications issued by Ministry of Environment and Forests, Govt. of India, for all installations intended to be located in India.

Name Plate

A name plate of 18Cr-8Ni stainless steel or Monet shall be attached by pins of a similar material to the engine and to any other piece of major auxiliary equipment, in a location permitting easy visibility. The Purchaser's item number, the VENDOR's name, serial number, rating and testing data appropriate to the unit shall appear on all name plates.

@MECON Limited; all rights reserves

MECON LTD, Delhi

Special Requirements

Diesel Engine required for Hazardous area shall meet the following requirements

Engines required to be installed in Zone 2 hazardous area shall comply with the requirement stipulated in EEMUA Pub. No. 107.

Flame arrestors (Flame Trap), inlet air shutoff valve, exhaust spark arrestor etc. shall be provided by the engine VENDOR in accordance with EEMUA Pub. No. 107.

ACCESSORIES

Couplings and Guards

Couplings shall be sized for maximum continuous torque, which is based on the potential maximum power of the diesel engine.

Couplings for generator drive application shall be flexible type.

The coupling used shall be successfully proven for the service being used. The service factor used shall be conservatively selected for the maximum horsepower rating of the engine with a factor of not less than 1.7.

Non sparking guards are required over all moving parts and shall be constructed either from aluminum alloys (other than Al-Magnesium alloy) or sheet metal- lined with non-sparking material. The guards shall be securely attached to the base plate on foundation by means of bolts. The guard shall be sufficiently rigid to withstand deflections as a result of bodily contact of nominally 100 kgs.

Base Plate

Unless otherwise specified, a common base plate for the complete unit (engine and the driven equipment) shall be supplied by the VENDOR. A base plate shall be a single fabricated steel unit, unless the PURCHASER and the VENDOR mutually agree that it may be fabricated multiple sections.

When specified, the base plate shall be suitable for column mounting i.e. of sufficient rigidity to be supported at specified points without continuous grouting under structural members.

The base plate shall be provided with lifting lugs for a four point lift. Lifting the base plate complete with all equipment mounted shall not permanently distort or otherwise damage the base plate or the machinery mounted on it.

The bottom of the base plate between structural members shall be open. When installed on a concrete foundation, accessibility for grouting under all load carrying structural members shall be

@MECON Limited; all rights reserves

MECON LTD Delhi

provided.

Special Tools

When special tools and fixtures are required to disassemble, assemble or maintain the unit, they shall be included in the quotation and furnished as part of the initial supply of the machine.

Instrumentation

The VENDOR shall supply instrumentation and control system as specified in this specification. If in the opinion of the VENDOR, additional instruments, controls and safety devices are required, the VENDOR shall include the same in his scope of supply.

INSPECTION, TESTING & PREPARATION FOR SHIPMENT

General

The Inspector representing PURCHASER shall have entry to the plant while and wherever work for the equipment is being performed.

The VENDOR shall have the responsibility of providing PURCHASER's Inspector with all requisite facilities/equipment for carrying out proper inspection and witnessing of test.

Engines of nominal rating up to 1000 kW shall be subjected to Engine Manufacturer's routine shop test and the test certificates shall be submitted to the PURCHASER's inspector for his review, provided the engine manufacturer is an ISO: 9000 certified VENDOR. These shall be observed tests.

For all other cases, engines shall be tested in accordance with the latest edition of ISO: 3046. The routine load and fuel consumption test shall be of the following duration:

a) Part Loads (50% & 75%) - 1/2 hour each

b) Full Load - 4 hours

c) 10% overload - 1 hour

After the specified tests have been completed satisfactorily, the fuel stop on the fuel injection pump shall be set and sealed at the specified site rating including provision for 10 percent overload.

The hydrostatic test certificates for the heat exchanger/ intercooler, fuel tanks & other pressure vessels shall be furnished to the PURCHASER's inspector for his review at the time of load

@MECON Limited; all rights reserves

MECON LTD, Delhi

testing of the diesel engine.

The engine control panel after assembly and wiring shall be functionally tested at the SUB-VENDOR's works in the presence of the PURCHASER's Inspector.

Preparation for Shipment

Immediately upon completion of all tests and inspections, all exposed machined surfaces shall be cleaned and coated with suitable rust preventive by the VENDOR and the unmachined surfaces shall be painted by at least two coats of red oxide primer.

Diesel engines along with its auxiliaries/ accessories shall be transported in assembled condition as far as possible.

All untapped openings shall be provided with 4 mm thick metal closures with full rubber gaskets and bolted by not less than 4 bolts. All connections including those for instruments, instrument leads, lubricating oil and the like shall be identified with securely attached tags indicating the type of connection, the instrument or the line description as applicable.

The equipment shall be crated for domestic shipment considering for storage at job site for at least 12 months. If any extra precaution is to be taken by the PURCHASER for storage beyond 12 months the same shall be explicitly indicated in the operation and maintenance manuals. Lifting load cut and handling instructions shall be securely attached to the exterior of the largest packing in a well-marked weather proof container. Upright position lifting points, weight (including packing) and dimensions shall be clearly identified with item nos., serial nos., package nos. and the names of the equipment.

VENDOR'S DATA

Contract Data

Drawings/ documents with following titles shall contain as a minimum the following information:

General Arrangement Drawing

A general arrangement drawing shall indicate

i) Outline dimensions (minimum three views) (All principal dimensions).
ii) Location (in all three planes), size, type, rating and identification of all PURCHASER's interface connections including those of vents, drains, fuel, cooling water & Electrical/ Instrumentation.
iii) Direction of rotation viewing from the driving end.
iv) Weight of each assembly/component.

The weight & location of centre of gravity of the heaviest assembly/components

@MECON Limited; all rights reserves

i) that must be handled for erection.
ii) Identification and weight, dimensions of the heaviest assembly/subassembly/component required to be handled for maintenance.
iii) Maintenance clearances and dismantling clearances.
iv) Speed
v) Layout of auxiliary equipment and operating platform.
vi) Make, Type and Size of couplings and the location of guards.
vii) A list of reference drawings if any.
viii) A list of any special weather-protection and climatic features.

Foundation Drawings
A foundation drawing shall indicate complete information required for foundation design by PURCHASER including the following:

i) Foundation bolt sizes & pipe sleeve details and pocket sizes & locations.
ii) Grouting thickness and other necessary technical details.
iii) Static weight of each independently grouted item (such as diesel engine gear box (if required), driven equipment, control panel etc.) and location of center of gravity of each of such items in all three planes.

iv) Weight distribution for each bolt/sub sole-plate, location and total static weight.
v) Dynamic loads, if any, caused due to various items grouted independently. (The cause of generation of such loads shall also be indicated).
vi) The direction and magnitude of unbalance forces and moments (with their phase angles) generated by the out of balance of the rotating/moving parts of the Machine at the relevant operating conditions. (These loads and their locations are to be given in all three planes. These shall be utilized for computing the amplitudes of vibration of the foundation).
vii) GD^2 value of each item resolved to driver speed.

viii) Maximum permissible amplitude of vibration on the foundation at the base level. (The location of the points on the foundation base where such amplitudes are not to be exceeded shall be given in all three planes). The reference of relevant code, if any, shall also be indicated.

ix) Total mass of rotating parts.

x) Total mass of reciprocating parts.

xi) Suggested dynamic factor and ratio of weight of foundation to weight of machine.

xii) Short circuit loads caused in motor drivers.

xiii) Operating speed of the machine and the driving motor.

@MECON Limited; all rights reserves

xiv) Scope of Supply of the Foundation Bolts (Unless otherwise specified to be provided by VENDOR).

xv) Maximum permissible magnitude of the unbalance forces and moments generated by the out of balance of the rotating/moving parts of the machine as allowed by the relevant codes if any. (The reference of such code, if any, shall also be indicated).

xvi) Recommended separation margin (if any), between the machine operating speeds and the natural frequencies of the machine foundation system along with the basis of such recommended separation margins.

[Note: Unless otherwise indicated by VENDOR, the dynamic forces as given in (vi & ix) above are considered as additional static loads for designing the foundations statically. Such dynamic forces are not unbalance forces and therefore, these shall not be utilized for computing the amplitudes of vibration.]

Field Alignment Diagram

The diagram shall indicate the relative displacement to be kept between the centrelines of various equipment at the time of installation, so that under normal running conditions the equipment gets fully aligned. This displacement should be decided on the basis of centreline temperature rise data of driver, gear box/ transmission system, driven equipment.

Data sheet

The VENDOR shall provide completely filled in data sheets.

Technical Data Manual/Mechanical catalogues

Mechanical catalogue is a compilation of "As Built" drawings and data, manufacturing and test records, installation, operating and maintenance instructions.

Not later than two weeks after successful completion of all specified tests, the VENDOR shall, furnish the required number of mechanical catalogues for the equipment, any auxiliaries and instruments that the VENDOR is providing. The mechanical catalogue shall include the following documents as a minimum:

i) All drawings and data as listed in the VENDOR data index & schedule. (For drawing, where PURCHASER's approval is required; the final certified drawings shall be attached.) Sections shall be organized in a manner that data & drawings related to one subject are grouped together such as Mechanical, Electrical, and Instrumentation etc.

ii) All manufacturing, inspection and test data and records.

iii) Installation and Instruction Manual

@MECON Limited; all rights reserves

The VENDOR shall provide sufficient written instructions, including a cross-reference list of all drawings, to enable the PURCHASER to correctly install the equipment and prepare the equipment for start-up. It shall include any special information required for proper installation that is not on the drawings, special alignment or grouting procedures, utility specifications (including quantity) and all installation data.

iv) Operation and Maintenance Manual

This manual shall provide sufficient written instructions and data to enable PURCHASER to correctly operate and maintain the equipment ordered. It shall include a section to cover special instructions for operation at extreme environmental and/or extreme operating conditions. The following shall be included in this manual:

a. Instructions covering start-up, normal shutdown, emergency shutdown, operating limits and routine operational procedures.

b. A description of equipment construction features and the functioning of component parts or systems (such as control, lubrication, etc.).

c. Outline and sectional drawings, schematics and illustrative sketches in sufficient details to identify all parts and clearly show the operation of all equipment and components and the methods of inspection and repair. Standardized sectional drawings are acceptable only if they represent the actual construction of the equipment.

v) Following information shall also be included in the Mechanical Catalogue:

a. Storage instructions for storing and preserving the equipment (including auxiliary units) at the plant site before installation of the same,
b. Field test procedures and acceptance criterion.

SURFACE PREPARATION AND PAINTING

All exposed steelwork and fabricated items and piping shall be prepared and painted as Manufacturer's Standard.

All SUB-VENDOR supplied components such as piping valves, instrumentation, junction boxes and like equipment shall be protected by the SUB-VENDORs standard protective coating.

SPARE PARTS AND SPECIAL TOOLS

Spares

Erection, Pre-Commissioning & Commissioning spares

VENDOR shall provide and include in its scope of supply the recommended spares parts for the equipment, instruments, valves etc. within his package to cover the Erection, Pre-Commissioning & Commissioning of the Chemical Injection Package.

@MECON Limited; all rights reserves

If however, any additional spare is consumed during Erection, Pre-Commissioning & Commissioning over and above the included Erection, Pre-Commissioning & Commissioning spares, the same shall be provided by the VENDOR at no extra cost to PURCHASER at the time of erection & commissioning.

Spares for two years Normal operation

VENDOR shall furnish an itemized list of recommended spares with unit prices for two years normal & continuous operation of the complete Package (including Mechanical, Electrical and Instrumentation spares) required.

Original Equipment manufacturer's recommendations shall be followed by the VENDOR in the preparation of recommended spare parts list. All spare parts furnished by VENDOR shall be wrapped and packaged to preserve the package under normal conditions of storage anticipated at project site.

The same parts shall be tagged by stainless steel tags and coded so that later identification as to their intended equipment usage will be facilitated. All items supplied shall be packaged separately and clearly marked as "Spare Parts" and shipped with the equipment in accordance with the instructions from PURCHASER. Packing lists shall be furnished complete and in detail so that parts can be handled without uncrating.

Special Tools

The VENDOR shall supply one (1) set of special tools & tackles required for the erection and/or maintenance of the package including all ancillary equipment.

Special Tools & Tackles means all such tools / tackles those are specific to the erection and/or maintenance of the supplied equipment/package, and are normally not expected to be available in a plant workshop, but without which it would be difficult or time-consuming to do erection and/or maintenance of the supplied equipment/package.

The VENDOR shall identify the special tools required with Bid. Special tools shall be itemized and submitted for review. Special tools shall be itemized and submitted for review.

GUARANTEE AND WARRANTY

The VENDOR shall guarantee that all equipment and its internals within his scope of supply shall meet the performance requirements as stated in the data sheets, specification and other applicable documents when operating under the specified design and operating conditions.

The VENDOR shall be responsible for Mechanical Guarantee for the Equipment.

If during the mechanical warranty period, any part of the equipment proves defectives, VENDOR shall replace such defective parts at their own cost and expenses.

@MECON Limited; all rights reserves

The VENDOR shall guarantee that all work will be performed in accordance with good and sound engineering and construction practices and within the requirements of this specification. The equipment, accessories and all the materials supplied by the VENDOR shall be free from defects, shall be suitable for the use for which they are intended and shall perform in accordance with the requirements of this specification.

The VENDOR shall agree to promptly correct, at his own cost at site, all the defects and mal-performance of the equipment and/or the accessories supplied by VENDOR to comply with obligation expressed or implied under the Request for Quotation (RFQ) and to extend the warranty period for the duration required to remedy such defects.

The VENDOR shall assume full responsibility for the proprietary equipment and component supplied by him, and his SUB-VENDOR, incorporated in the package are in accordance with this requisition.
The VENDOR shall guarantee the stability of the material of construction for the duties required, even if the PURCHASER has specified the type and the grade of material to be used.

****

MECON LTD, Delhi

@MECON Limited; all rights reserves

REV: 0

EDITION: 3

TECHNICAL SPECIFICATION

FOR

MEDIUM VOLTAGE SWITCHBOARD

DOCUMENT No. : MEC/05/E9/TS/06

Prepared & Issued by

ELECTRICAL SECTION
(Oil & Gas SBU)
MECON LIMITED
(A Govt. of India Undertaking)
13th& 15th Floor, North Tower, SCOPE MINAR,
Laxmi Nagar District Centre,
Delhi-110092 (India)

@MECON Limited; all rights reserves

MECON LTD, Delhi

INDEX

Sl. No.	Description	Page No
S.No.	**DESCRIPTION**	**PAGES**
01.00	INTENT	4
02.00	CODES AND STANDARDS	4
03.00	DESIGN AND FABRICATION	5
04.00	SWITCHBOARD COMPONENTS	15
05.00	INTERFACE REQUIREMENS	24
06.00	PROTECTION AND METERING	24
07.00	DRAWINGS AND DOCUMENTS	28
08.00	COMPLETENSS OF EQUIPMENT	29
09.00	INSPECTION AND TESTING	29

Rev	Date	Prepared by	Checked by	Approved by
0	11.07.2025	Chirosmita Banerjee	Saurabh Singh	Pankaj Shrivastava

© Copyright MECON Limited – All rights reserved.
THIS DOCUMENT IS THE SOLE PROPERTY OF MECON AND ISSUED FOR THE SPECIFIC PROJECT MENTIONED HEREIN. THIS IS NOT TO BE COPIED OR USED FOR ANY OTHER PROJECTS UNLESS EXPLICITLY PERMITTED BY MECON.

@MECON Limited; all rights reserves

AMENDMENT STATUS

(OLD NUMBER OF STANDARD: MEC/TS/05/E9/06)

Sl. No.	Clause / Paragraph / Annexure / Exhibit / Drawing Amended	Page No.	Revision	Date	By (Name)	Verified (Name)
1	Document Number replaced with New number as **MEC/05/E9/TS/06**	All	Rev 0/ Ed 3	11.07.2025		
2	Section re-name as Electrical Section (Oil & Gas SBU) Delhi	All	Rev 0/ Ed 3	11.07.2025		

MECON LTD, Delhi

@MECON Limited; all rights reserves

1.0 INTENT

The intent of this standard specification is to define the general requirements for design, manufacture, assembly and testing at manufacturer's works, packing, transportation and receipt at site with all materials and accessories of Medium Voltage Switchboard.

02.0 CODES & STANDARDS

The equipment shall comply with the requirements of latest revision of following standards issued by BIS (Bureau of Indian Standards), unless otherwise specified:

IS 5	Colours for ready mixed paints and enamels
IS 1248	Direct acting indicating analogue electrical measuring instruments and their accessories
IS 2705	Current transformers
IS 2824	Method for determining of the proof and the comparative tracking indices of solid insulating materials
IS 3156	Voltage transformers
IS 3231	Electrical relays for power system protection
IS 3618	Phosphate treatment of iron and steel for protection against corrosion
IS 5082	Wrought aluminium and aluminium alloy bars, rods, tubes and sections for electrical purposes
IS 5578	Guide for marking of insulated conductors
IS 6005	Code of practice of phosphating of iron and steel
IS 8623	Low voltage switchgear and controlgear assemblies
IS 11353	Guide for uniform system of marking and identification of conductors & apparatus terminals
IS 12672	Internal fuses and internal overpressure disconnectors for shunt capacitors
IS 13340	Power capacitors of self-healing type for AC power systems having rated voltage upto and including 1000V
IS 13341	Requirements for ageing test, self-healing test and destruction test on shunt capacitors of the self-healing type for ac power systems having a rated voltage upto and including 650V
IS 13703	Low voltage fuses for voltages not exceeding 1000V AC or 1500V DC
IS/IEC 60529	Degree of protection provided by enclosures (IP code)
IS/IEC 60947	Low voltage switchgear and control gear

@MECON Limited; all rights reserves

MECON D, Delhi

IEC 61641 Enclosed low-voltage switchgear and control gear assemblies – Guide for testing under conditions of arcing due to internal fault

Wherever the requirements in this specification are in conflict with any of the above Standards, the requirements under this specification shall be binding.

In case of any contradiction between various referred standards/ specifications/ data sheet and statutory regulations the following order of priority shall govern. However, stringent of the below shall be followed

- Statutory regulations.
- Schedule of Rate
- Scope of Work/ Job specification.
- Design Basis.
- Data sheets.
- Standard Specification.
- Codes and standards.

03.00 DESIGN AND FABRICATION REQUIREMENTS

03.01 Assembly

The switchboard shall be metal enclosed, free standing, floor mounting, compartmentalized, modular type, fully draw out or fixed type as specified in the data sheet.

The switchboard enclosure shall be dust and vermin proof and shall provide a degree of protection as specified in the data sheet.

The switchboard shall be assembled out of vertical panels of uniform height in single line up. The switchboard height shall be restricted to 2300mm.

The switchboard shall be designed to ensure maximum safety during operation, inspection, connection of cables, relocation of outgoing circuits and maintenance, with the bus bar system energised and without taking any special precautions.

It shall be possible to extend the switchboard, in either direction at a later date. Ends of bus bars shall be suitably drilled for this purpose. Panels at extreme ends shall have openings, which shall be covered with plates screwed to the panel. Details of drilled holes in bus bar and openings in the panels, provided for future extension shall be clearly shown in the vendor drawings.

Adequate means shall be provided to prevent shorting of power and / or control terminals due to accidental dropping of maintenance tools etc. inside the switchboard. Checking and removal of components shall be possible without disturbing adjacent equipment.

All identical equipment and corresponding parts shall be fully interchangeable.

The frame, of individual vertical panels shall be fabricated using pressed and cold rolled sheet steel. The sheet steel used for panel shall be of minimum 2mm (14SWG) CRCA except that the doors and covers may be made of 1.6mm (16SWG) CRCA. Wherever required, stiffeners shall be

@MECON Limited; all rights reserves

provided to increase stiffness of large size doors and covers.

The switchboard shall be provided with integral base frame for each vertical panel. The switchboard integral base frame shall be suitable for tack welding.

All openings, covers and doors shall be provided with neoprene Gaskets. Removable blanking plates shall be provided to cover the openings in the event of withdrawing the feeder modules. Number of blanking plates shall be 10% of each module size with a minimum of one number.

All hardware shall be corrosion resistant. All joints and connections of the panel members shall be made by zinc passivated cadmium plated high quality steel bolts, nuts and washers.

Removable, CRCA or non-magnetic gland plates having minimum 3mm thickness shall be provided. Non-magnetic cable gland plates shall be provided for termination of single core cables only.
Suitable removable type eyebolts shall be provided for the lifting of the panel/shipping section. These bolts, when removed shall not leave any opening in the panels.

The switchboard shall be formed using distinct vertical panels each comprising of following compartments.

a) A metal enclosed horizontal bus bar compartment running at top unless otherwise specified.

b) Individual feeder modules in multitier mode.

c) Cable termination compartment.

d) Vertical bus bars serving all feeder modules in the vertical panel.

e) Perforated sheet steel / insulating material enclosed horizontal auxiliary bus bars for control, interlock, indication and metering wiring running horizontally.

Metal sheets shall be provided between two adjacent vertical panels running up to full useful height of the switchboard.

MCC shall be of single/double front execution as specified in the data sheet. However, air circuit breaker panels and fixed type switchboard shall be in single front execution only.

Motor starter and switch fuse modules shall not be accommodated at front and rear of Incomer and bus coupler panel.

All metering and protection equipment associated with a particular circuit as specified in the data sheet shall be housed in separate and independent compartment earmarked for that particular circuit and in the fixed portion of the vertical panel in case of circuit breaker panels.

All auxiliary devices for control, reset, indication, measurement and protection such as push buttons, control and selector switches, indicating lamps, measuring instruments and protective relays shall be mounted on the front side of the respective compartment. The design shall be such that all power on/off or start / stop and relay reset operations shall be performed without opening the panel door.

@MECON Limited; all rights reserves

All dummy panels and rear extensions required for bus trunking, cable terminations, mounting of relays, metering and control components etc. shall be supplied by Vendor. Additional dummy panels required to have unobstructed cable entries shall be provided as specified in the data sheet.

The switchboard panels shall be provided with space heaters to prevent moisture condensation. The space heater shall be located in the bottom part of each panel and shall be supplied from 240 V AC auxiliary bus for space heater. The space heater shall be provided with a thermostat having adjustable setting and double pole miniature circuit breaker.

Panel Illumination and receptacle shall be provided in cable alley of each vertical section of the switchboard as follows

a) Door limit switch and illuminating compact fluorescent lamp.

b) Single phase 5 A decorative type receptacle with on-off switch.

Auxiliary bus bars each of minimum size 18-mm^2 coppers shall be provided for following applications. Exact number of bus bars shall depend on various control, metering and auxiliary power distribution requirement.

a) Panel space heater supply and motor space heater supply.

b) Control supply for breaker spring charging motors, motor starter control and indication circuit.

c) Control supply for breaker tripping, closing and indication circuits.

d) AC potential supply for energy meters, voltage operated relays etc.

e) Tee-off connectors shall be used for distributing auxiliary supply to each vertical panel. Rubber grommets shall be used for all wire entries to make the entries dust and vermin proof.

f) Provision to hook up of external DC control supply to be provided either in bus PT panel or bus coupler panel.

All identical feeder modules shall be interchangeable in case of draw out execution.

Each vertical panel shall have a separate cable alley. The width of this cable alley shall be sufficient to accommodate all the cables and shall have free access for cable terminations and in any case shall not be less than 200mm minimum. Cable alleys shall be provided with suitable doors.

Sheet steel barriers shall be provided between individual compartments and cable alley. This barrier shall be provided with opening for power and control connections and it shall be possible to safely carryout maintenance work on cable connections to any one circuit in the cable alley with the busbars and the adjacent circuits live.

Maintenance and connection of cables to any modules shall be possible without having to take out

@MECON Limited; all rights reserves

the modules from its position from the panel.

Switchboard shall be completely lined up in one straight row with the type and quantities of feeders as defined in the data sheet. Generally, the feeders of three main categories are identified as air circuit breaker, motor starters, switch fuse / moulded case circuit breakers.

The maximum height of the operating handle and switches shall not exceed 1900mm and the minimum height not below 300mm.

Unused modules in the panel shall be fully equipped with hinged door, power and control terminals for starter modules and cradle for future use.

Segregation Form shall be min. 3B.

03.02 Bus Bar

Bus bars shall be of high conductivity electrolytic aluminium supported on insulators made of non-hygroscopic, non-inflammable material with tracking index equal to or more than that defined in Indian standards.

The main bus bars shall have uniform current ratings throughout their length as specified in the data sheet. The current rating of the neutral shall be half that of the phase bus bars. Removable neutral links shall be provided on feeders to permit isolation of the neutral bus bar.

Both horizontal and vertical bus bars, bus joints and supports shall be capable of withstanding dynamic and thermal stresses of short circuit currents for 1 second as specified in the data sheet. The short circuit capacity of the neutral bus bars shall be in line with IS/IEC 60947.

Only zinc passivated or cadmium plated high tensile strength steel bolts, nuts and washers shall be used for all bus bar joints and supports.

The hot spot temperature of bus bars including joints at design ambient temperature shall not exceed 95°C for normal operating conditions.

The current rating as defined for switchboard and components in the data sheet are for design ambient temperature at site conditions and for being inside the cubicle at fully loaded condition. The vendor shall suitably derate the nominal rating to suit the above condition.

All bus bars shall be insulated with heat shrunk PVC sleeves of 1100V grade. Red, yellow and blue colour shall be used for phase bus bars and black colour shall be used for neutral bus bars. Removable type shrouds shall be provided for joints.

Interconnections between the main bus bars and individual units shall be made by using aluminium bus bars of adequate rating. These interconnections of the vertical bus bars shall be in separate compartment and fully shrouded.

Minimum clearance between live parts, between live parts/neutral to earth shall be 19 mm. However, clearances between terminals at components shall be as per applicable individual standards for components.

@MECON Limited; all rights reserves

Vertical bus bars for circuit breaker panels shall be sized depending upon the rating and number of breakers per vertical panel. However Vertical bus bars of all other panels shall be of uniform cross section. Size of vertical bus bars shall not be less than 500mm^2 Aluminium per phase or equivalent copper for panels rated above 25kA.

03.03 Air Circuit Breaker Feeders

The air circuit breaker panels shall have distinct bus bar, breaker and cable compartments. The design of each compartment shall be such as to prevent movement of vermin from a particular compartment to any other compartment of the panel when the air circuit breaker is withdrawn and compartment door is closed.

Blanking plates shall be provided for each air circuit breaker compartments, which would be used after installation, to cover the openings in the event of taking out the breaker outside the compartment.

In order to minimise accidental access and avoid accidents due to falling tools, all the outgoing links shall be shrouded.

Outgoing air circuit breaker can be mounted in a maximum of two-tier execution while the incoming/bus coupler Air circuit breaker shall be in single tier execution only.

All ACBs shall be provided with zone selective interlocking which helps in reducing the thermal stress and provides discrimination between incoming & outgoing breaker during short circuit and ground faults. The manufacturer shall supply all necessary equipment like ZSI module, power supply and wiring connectors to implement ZSI.

Cable compartment

a) Separate compartment totally enclosed from all sides shall be provided for cable termination, on the rear side. Access to cables shall be from the rear side after opening the cabling compartment door.

b) The incoming / outgoing cable termination shall be staggered for each circuit and barriers of sheet steel or insulating material shall be provided between termination of two circuits such that maintenance on one circuit could be carried out while the other circuit is live. Suitable clamping arrangements shall be provided for cables and cable termination. Terminal blocks shall not be used for supporting the cables.

c) The incoming supply for PCC / PMCC panels shall be through top entry bus ducts or through top or bottom entry cables as specified in the data sheet. The outgoing cables shall have top or bottom entry as specified in the data sheet.

d) The cable terminations shall be suitably sized for receiving specified number of cables per termination and provision shall be made for terminating each outgoing cable with a separate bolted connection. In case the total number of cables entering a particular panel cannot be accommodated in the cabling compartment of the panels an extension panel of full height shall be

@MECON Limited; all rights reserves

added to the cabling compartment for accommodating extra cables.

Air circuit breaker compartment

a) The air circuit breaker compartment shall be fully draw out or fixed type as specified in the data sheet. Suitable guides shall be provided to facilitate easy withdrawal of the air circuit breaker in case of fully draw out execution.

b) The current transformers for the ammeter/protection circuits shall be mounted on the fixed portion of the compartment. However, current transformers associated with built-in releases may be mounted on the air circuit breaker trolley.

c) All terminals except wiping/sliding type control terminals shall be shrouded with plastic covers to prevent accidental contact. For direct termination - clip on shrouded type terminals shall be provided.

d) There shall be three positions for the fully draw out execution of draw out trolley viz:

i) "Service" position - In this position both power and control circuits shall be connected. This shall be the normal operating position of the air circuit breaker.

ii) "Test" position - The power contacts shall be disconnected in this position but the control connections shall not be disturbed, it shall be possible to close and trip the air circuit breakers in this position.

iii) "Drawout" Position - both power and control circuits shall be disconnected in this position and air circuit breaker removed from the cubicle.

e) The air circuit breaker shall be lockable in "service" and "test" positions. Safety shutters shall be provided when the air circuit breaker is in withdrawn/drawout position.

f) The earth connection must remain connected in "Test" position; Earthing of the unit shall be done with a "pin" or with scrapping earth connections.

g) The earth connection shall make before the main power / control contacts make and break after the power /control contacts are disconnected. Earthing connection through a plug and socket connection shall not be acceptable

Interlocks

Following interlocks shall be provided:

a) Compartment doors shall be interlocked against opening when air circuit breaker is in closed condition. However, it shall be possible to defeat this interlock for inspection purposes.

b) It shall not be possible to push "in " a drawn-out air circuit breaker in closed condition or withdraw an air circuit breaker in closed condition.

c) It shall be possible to operate an air circuit breaker only in the defined "Full in" or "service"

@MECON Limited; all rights reserves

and "test' position inside the panel. It shall not be possible to operate the air circuit breaker in intermediate positions while inserting or withdrawing air circuit breaker.

d) Electrical/mechanical interlocking shall be provided between incomers and bus coupler of switchboard as specified in Operating philosophy and or SLD.

Any unused air circuit breaker compartment shall be fully equipped and provided with compartment door, vertical busbars and control terminals/ wiring etc. such that the same could be used for housing outgoing air circuit breakers in future without any modifications to the panel.

03.04 Non air circuit breaker feeders

The non-air circuit breaker feeders shall be fully draw out or fixed type as specified in the data sheet. The design of drawout feeder modules shall not change for single front or double front execution. Separate vertical bus bars shall be provided for each front side modules.

The outgoing feeder trolleys for draw out type switchboard shall be fully drawout and shall have the following features.

a) It shall be possible to withdraw the trolley without having to unbolt or unscrew any power and control connections to the equipment mounted on the withdrawable trolley.

b) Both power and control connections shall be drawout type. All line and bus PTs shall be in drawout execution only. However, outgoing modules having size more than half of the useful vertical height of the panel may be in mixed combination of drawout /fixed type.

c) Control supply transformer modules with burden higher than 2.5kVA may be in fixed execution.

d) The trolley withdrawal shall be by means of crank and screw arrangement. Alternatively, movement on guided rollers may also be acceptable. Plug in operation shall be independent of manual force.

e) For drawout type feeders of size equal to or greater than half the useful vertical height of panel, positive clamping arrangement shall be provided on the top portion of the trolley in addition to clamping arrangement at the bottom, to ensure all round positive pressure on the power drawout contacts once the trolley is plugged in.

f) Power drawout contacts shall preferably be located towards the bottom portion of each trolley. The trolley shall be lockable in fully plugged in position and devices shall be provided to ensure positive plugging in. In test position, power contacts shall be totally isolated and a device shall be provided for indication of test position.

g) Vendor shall supply ACB withdrawal mobile trolley with winch assembly duly certified by a competent authority as per factory act/rules as part of their base quote.

The incomer and bus coupler feeders with load break switches rated 800A and above may be in fixed execution.

@MECON Limited; all rights reserves

Various compartment sizes in a vertical panel shall be multiples of a basic dimension. However, the minimum module size for switch fuse feeder / MCCB feeder shall not be less than that defined in the data sheet. Vertical bus bars shall be pre-drilled at regular intervals for complete flexibility for changes in size of modules.

All switch drives other than rotary control switches, shall be lockable in both 'ON' and 'OFF' positions.

The switches/Moulded case circuit breakers /MCB shall be interlocked with the compartment door to prevent opening of the door when the switch/ moulded case circuit breaker is in 'ON' position and to prevent switching on when the door is open. A defeat mechanism for this interlock shall also be provided.

03.05 Motor starter and contactor-controlled feeders

Starter modules required for motor control shall be of following types and internal control wiring of all starter modules of each type shall be identical for all ratings.

d) FVNR Full voltage non -reversing starter with minimum 18 control terminals.

e) FVR Full voltage reversing starter with minimum 24 control terminals.

f) FVNR – HD Full voltage non -reversing heavy duty starter with long starting time such as for compressors and fans etc. with minimum 18 control terminals.

Switch fuse / contactor feeder modules shall be of following types and internal control wiring of all modules of each type shall be identical for all ratings.

a) SFUC Switch fuse contactor modules with 18 control terminals.

b) MCCBC MCCB contactor modules with 18 control terminals.

Various compartment sizes in a vertical panel shall be multiples of a basic dimension. However, the minimum module size for motor starter / contactor-controlled feeder shall not be less than that defined in the data sheet. Vertical bus bars shall be pre-drilled at regular intervals for complete flexibility for changes in size of modules

Minimum 2000 VA control transformer shall be provided for each bus section of the switchboard having contactor control feeders and each transformer shall be sized for the entire switchboard. For switchboard having two bus sections and coupled by bus coupler shall have manual changeover switch for the control transformers.

To facilitate site modification due to changes in motor kW ratings and to minimize spares inventory, overload relays and power fuse links shall meet the following requirements.

a) All bimetal overload relays shall be separately mounted type with connecting links rated for the maximum rating of the contactor in a starter module.

b) Bimetal overload relays of various current ranges required for motors likely to be connected to a contactor must be identical in dimension for inter-changeability. In case offered relays are with

@MECON Limited; all rights reserves

different dimension for any particular starter module, special mounting plate suitable for mounting different relays shall be provided in all the modules of that size.

Heavy duty motor starters shall be provided with saturable type current transformer operated overload relays only, which shall be suitable for motor starting time of 15-60 seconds.

All contactor-controlled starter feeders shall meet the requirements of type-2 co-ordination as per IS/IEC 60947.

Selection, sizing and suitability of all components shall be the Vendor's responsibility and all equipment required for safe and satisfactory operation shall be included by the Vendor even if not specifically mentioned.

Control circuit provided for motor feeders shall be with fail safe feature.

Soft starter modules shall be interfaced over Modbus TCP/IP protocol.

03.06 Clearance and Creepage distances

The clearance and creepage distances shall not be lower than the values specified below:

a) Minimum clearance between two live conductors (Ph-Ph) : 25.4mm

b) Minimum clearance between live conductor and earth : 19mm

c) Minimum creepage distance : 20mm

The clearances and the creepage, as specified above, shall definitely be maintained in the bus-bar system. Provision of bus-bar insulations, separator or barriers shall not be considered to reduce the clearance from the values specified above.

At the termination points in the equipment, e.g., ACB, MCCB, switches, contactors, thermal relays, etc. it is realized that above clearance may not always be possible to be maintained. All such points where above clearance is not possible to be maintained should, therefore, be insulated or taped.

03.07 Wiring and Terminations

Inside the cubicles, the wiring for control, signalling, protection and instrument circuits shall be done with BIS approved, PVC insulated, flame retardant type, copper conductor wire. The insulation grade shall be 660V. The wiring shall preferably be enclosed in plastic channels or neatly bunched together.

PVC insulated copper conductor of cross section 1.5mm^2 may normally be used provided the control fuse rating is 10amps or less. For 16amps control fuse circuit 2.5mm^2 copper conductor shall be used. Each wire shall be terminated at a separate terminal. C.T.Circuit wiring shall be done with 2.5mm^2 Copper conductor.

Shorting links/suitable-shorting arrangement for shorting CT secondary shall be provided.

@MECON Limited; all rights reserves

MECON LTD, Delhi

Each wire shall be identified at both ends by PVC ferrules.

Inter panels wiring within each shipping section shall be switchboard vendor's responsibility. For wiring between shipping sections, vendor shall provide terminal blocks on adjoining shipping sections and supply suitable jumpering wires. Interpanel wiring shall be taken thorough PVC sleeves or rubber grommets.

A minimum of 10% spare terminals shall be provided on each terminal block.

Conductors shall be terminated with adequately sized compression-type lugs for connection to equipment terminals and strips. Stranded conductors shall be soldered at the ends before connections are made to the terminals. Sufficient terminals shall be provided on each terminal block to ensure that not more than one outgoing wire is connected per terminal.

Terminal strips shall preferably be separated from power circuits by metal barriers or enclosures. All spare contacts of auxiliary relays, timers, etc shall be wired up to the terminals.

All external power and control cables shall enter the switchboard from top or bottom as specified in the data sheet. Sufficient space shall be provided for ease of connection and termination of cables. Terminals shall be suitable for termination of external power and control cable sizes as specified in the data sheet.

The switch board shall be completely factory wired and ready for external connections.

03.08 Earthing

All panels shall be connected to a tinned copper earth bus bar running throughout the length of the switchboard.

The minimum earth bus size shall be 30x6 mm^2 copper for fault level up to 31.5kA and 50 x 6mm^2 copper for fault level above 31.5kA. However, vendor to ensure the size of conductor as per the fault level specified in the datasheet.

All doors and movable parts shall be earthed using flexible copper connections to the fixed frame of the switchboard. Provision shall be made to connect the earthing bus bar to the plant-earthing grid at two ends.

All non-current carrying metallic parts of the mounted equipment shall be earthed. Minimum 4 nos. 10mm diameter bolts with nuts shall be provided on the earth bus for termination of fourth core of cable per vertical panel.

03.09 Name plate

A nameplate with the switchboard designation shall be fixed at the top of the central panel. A separate nameplate giving details for each feeder compartment of all panels shall be provided.

The nameplates for feeder compartments shall be in two parts. One part shall have necessary details pertaining to the compartments number of vertical panel of the switchboard. The other

@MECON Limited; all rights reserves

parts shall be removable and shall contain all details regarding the feeder number for drives/equipment controlled by the particular module as per approved single line diagram.

Nameplate or polyester adhesive stickers shall be provided for each equipment mounted inside the switchboard. Special warning plates shall be provided on removable covers or doors giving access to cable terminals and bus bars.

Blank nameplates shall be provided for all spare and vacant modules.

Engraved nameplates shall preferably be of 3-ply (Black-White Black) lamicoid sheets or anodised aluminium. However back engraved perspex sheet nameplates may also be acceptable. Nameplates shall be fastened by screws and not by adhesives.

Special warning labels shall be provided inside the switchboard also, wherever considered necessary. Identification tags shall be provided inside the panels matching with those shown on the circuit diagram.

03.10 Painting

All metal surfaces shall be thoroughly cleaned and degreased to remove mill scale, rust, grease and dirt. Fabricated structures shall be pickled and then rinsed to remove any trace of acid. The under surface shall be prepared by applying a coat of phosphate paint and coat of yellow zinc chromate primer. The under surface shall be made free from all imperfections before undertaking the finishing coat.

After preparation of the under surface, the switchboard shall be spray painted with two coats of epoxy based final paint or shall be powder coated.

Colour shade of final paint shall be as specified in the data sheet.

The finished panels shall be dried in stoving ovens in dust free atmosphere. Panel finish shall be free from imperfections like pinholes, orange peels, runoff paint etc. Vendor shall supply final paint (1 litre per switchboard) in non-returnable container for final touch up at site.

All unpainted steel parts shall be cadmium plated or suitably treated to prevent rust formation. If these parts are moving elements then they shall be greased.

04.00 SWITCHBOARD COMPONENTS

04.01 Air circuit breakers

Air circuit breakers shall be air break type and shall be provided with electrical power operating mechanism. Wherever air circuit breakers are provided in place of Isolators, air circuit breaker can be manually operated type. It shall be applicable for IoT.

Operating Mechanism

a. Electric power operating mechanism shall be motor wound spring charged stored energy type. However, manual-operating mechanism may be of the spring charging stored energy type or the spring assisted type. For air circuit breakers with electrical power operating mechanism,

@MECON Limited; all rights reserves

provision shall also be made for manual spring charging. Closing time of air circuit breakers with manual operating mechanism shall be independent of the speed of the operating handle.

b. All stored energy operating mechanism shall be equipped with following features.

i) Failure of springs, vibrations or shocks shall not cause unintended operation of air circuit breaker or prevent intended tripping operation.

ii) Closing of air circuit breakers shall be prevented unless the spring is fully charged.

c. All electrical power operating mechanisms shall be suitable for remote operation and shall be equipped with following features.

i) Provided with emergency manual charging facility. The motor shall be automatically, decoupled (mechanically) once the manual-charging handle is inserted.

ii) Provided with universal motor operable on AC or DC control supplies.

iii) Closing operation of air circuit breaker shall automatically initiate charging of the spring for the next closing operation without waiting for tripping of air circuit breaker.

iv) Closing operation shall be completed once the closing impulse is given and the first device in the control scheme has responded even though the control switch / Push Button is released provided no counter trip impulse is present.

v) Spring charging motors in switchboard shall be suitable for control supply as specified in the data sheet.

Air circuit breaker trip and closing coils in case of electrically operated breakers and trip coil in case of mechanically operated breakers and air circuit breaker indication shall be suitable for satisfactory operation on a control supply system indicated in the data sheet.

Air circuit breakers shall be provided with anti-pumping and trip free feature.

The air circuit breakers shall be provided with mechanically operated emergency tripping device. This device shall be available on the front of the panel. Mechanically operated 'closing' device shall be provided for all air circuit breakers. However mechanical closing shall be inhibited for all air circuit breakers in service position.

Air circuit breakers open and closed positions, service and test locations and spring charged condition shall also be indicated mechanically in addition to electrical indications.

Castle lock arrangement shall be provided for all the air circuit breakers so that air circuit breakers can be locked in the test position while carrying out the maintenance of down stream equipment.

Air circuit breakers and the switchboard shall be designed in such a way that over tightening of the air circuit breakers while racking-in (plugging-in) shall not damage the air circuit breakers.

Air circuit breakers shall be provided with operation counters.

Releases are not required to be provided with air circuit breakers where relays are used. However,

@MECON Limited; all rights reserves

air circuit breakers having AC control supply voltage shall be provided with under voltage release unless specified otherwise.

Air circuit breakers shall be provided with minimum 4 NO + 4 NC contacts, wired and available for Purchaser's use.

ACB shall have Ready to Close indication. Ready to close indication shall give a single indication, only if ACB is ready to be closed, after checking all the given conditions (UV release energized, Shunt release de-energized, spring charged, Breaker is not "ON", Breaker has not tripped on fault, Breaker is not mechanically interlocked with other breaker and ACB is not racked in completely in service position) ensuring safety for user and electrical distribution. The tripping and closing coils shall be continuously rated.

04.02 Switches

All switches or fuse switches shall be air break type provided with quick make/break manual operating mechanism. The operating handle shall be mounted on the door of the compartment having the switch.

Rating of switches for starter module shall meet the requirements of AC-23 duty as per IS/IEC 60947 and minimum rating shall be as specified in the data sheets.

Switches shall have a rated short-circuit making capacity in conformity with the prospective short-circuit currents, as specified for the busbar system.

04.03 Fuses

Fuses shall be non-deteriorating HRC cartridge link type. The rupturing capacity of the fuse shall be equal to the short circuit rating of the busbar system.

Power fuses shall be pressure fitted type and shall preferably have ribs on the contact blades to ensure good line contact.

It shall be possible to handle fuses during off load conditions with full voltage available on the terminals. Wherever required fuse pullers shall be provided. The fuse base shall be so located in the modules to permit insertion of fuse pullers and removal of fuse links without any problem.

4.04 Contactors

The contactors shall be air break, holding coil type and shall have AC3 or AC4 ratings as specified in the data sheet.

The holding coil of the contactor shall be suitable for operation on specified control supply voltage in the data sheet and shall work satisfactorily between 65 to 110% of the rated value.

4.05 Thermal overload relay

Bimetal relays/ Microprocessor based shall be provided for protecting the motor from thermal overload as per mentioned in datasheet.

Bimetal relays shall be positive acting ambient temperature compensated type with adjustable

@MECON Limited; all rights reserves

setting range.

Bimetal relays shall have built-in single phasing prevention feature, which operate even with 50% rated current at the time of single phasing.

Bimetal relays shall be manually reset type with the reset push button brought out on the front of the panel. The reset push button shall be capable of being operated without opening the compartment door.

04.06 Moulded case circuit breakers

MCCBs shall be provided with spring assisted quick make/ break manually operated trip free mechanism. Wherever specified, MCCB shall be suitable for remote tripping operation and the tripping device shall be suitable for the specified control supply voltage in the data sheet.

MCCBs shall be provided with tripping device having inverse time characteristic for over load protection and instantaneous characteristics for short circuit protection and MCCB rated above 125A shall preferably have adjustable settings.

'ON' and 'OFF' position of the operating handle of MCCB shall be displayed and the operating handle shall be mounted on the door of the compartment housing MCCB.

MCCB's as part of motor starter module shall be current limiting type and type tested for type-2 coordination as per IS/IEC 60947. MCCB's as part of power feeder module shall be current limiting type.

MCCBs shall be provided with solenoid / Motorized closing mechanism to make them suitable for remote closing operation if specified in the data sheet. The closing solenoid/motor shall be suitable for specified control supply voltage in the data sheet.

MCCB shall not have any line load bias.

MCCBs shall be designed to prevent access to live parts when the cover is removed,

04.07 Relays

Type of relay shall be numerical, static or electromagnetic type as specified in the data sheet.

All electromagnetic protective relays shall be back connected, of drawout type, suitable for flush mounting, and fitted with dust-tight covers. Alternatively, "plug-in" type relays will also be acceptable. Auxiliary relays are acceptable in fixed execution.

The protective relay cases shall have provision at the front for "testing and calibration" purposes. It shall be possible to test the relays without disconnecting the wiring and without withdrawing the relays. The insertion of the test plug shall automatically short circuit the CTs and permits extension of external power supply to the relay.

Each tripping relay shall be lockout type with hand reset coil cut-off contact. The tripping relay shall be suitable for satisfactory operation from 50 % to 110 % of the specified control supply voltage.

@MECON Limited; all rights reserves

Each protective relay shall be provided with minimum 2 nos. potential free contacts of required configuration.

Protective relays, metering and control components shall be preferably mounted on the front side and upper part of the panel and mounting of relays on the lower portion shall be avoided. All protection relays shall be numerical type and shall communicate with station PLC over Modbus TCP/IP.

Only major relays, meters and controls are indicated in the data sheet. For other relays, bidder is free to quote for equivalent numerical relay. Any auxiliary relays, timers, switches, etc, as required while developing the control schematic and felt necessary for safe operation, even if these are not specifically included, shall be supplied.

04.08 Instrument transformers (CT's/PT's)

Current transformers shall generally conform to IS 2705 and any special requirement with respect to Numerical relay shall be taken care by the vendor.

For general guidance, Vendor shall note that the protective current transformers shall have an accuracy class "5P" and an accuracy limit factor greater than or equal to "10". However, CTs for restricted earth fault shall be of class "PS". Vendor shall co-ordinate the knee point voltage, magnetising current for PS class CTs to avoid saturation and mismatching of CTs provided at another end by other Vendor. Vendor shall be solely responsible for coordinating the relay characteristics with suppliers for the proper selection of all CTs with special attention to CTs of class PS.

Current transformers for instruments shall have an accuracy class 1.0 and accuracy limit factor less than 5.0. However, accuracy class of 3.0 is acceptable for CT's meant for remote ammeters. All CTs shall be star-connected.

The current transformers in circuit breaker feeders shall be capable of withstanding the applicable peak momentary short circuit and the symmetrical short circuit current for 1.0 second.

The voltage transformers shall be cast resin type transformers and PT shall generally conform to IS 3156. PT shall be provided with HRC fuses on primary side and Miniature circuit breakers with auxiliary contact on the secondary side.

CT ratios of outgoing feeders are tentative. Vendor shall accommodate changes, if any, at later date as required. The VA burden, knee-point voltage, CT resistance and magnetizing current shall be calculated by the Vendor and the same shall be reviewed by the Purchaser before proceeding with manufacture.

04.09 Measuring instruments

All measuring instruments shall be of 96 x 96mm and 72 x 72mm square pattern, flush mounting type. Measuring instruments shall be provided, as specified in the data sheet. All required auxiliary equipment such as shunts, transducers etc, shall be included.

All AC ammeters and voltmeters type shall be as specified in the data sheet and shall have

@MECON Limited; all rights reserves

accuracy class of 1.5 as per IS. Analogue meters shall be of moving-iron type. Ammeters for motor feeders shall have a non-linear compressed scale above rated current to indicate motor starting current

All frequency meters and power factor meters type shall be as specified in the data sheet and shall have accuracy class of 1.5 as per IS.

All auxiliary equipment such as shunts transducers, CTs PTs etc. as required shall be included in the supply of the switchboard.

The kW/kWH meters type shall be as specified in the data sheet and shall have accuracy class of minimum of 2.5. The kW/kWH meters shall be suitable to measure unbalanced loads on 3 phase 4-wire system. Test terminal block shall be provided for KWH meters.

All meters shall be separate or composite type, high reliable, accurate, compact and self-powered. Digital meter data shall be saved in case of power failure. Field programming from front of the meter shall be possible and shall be RS485port over modbus TCP/IP in case specified in data sheet.

Phase sequence indicating device type shall be as specified in the data sheet. This shall be provided with push button and contactor of 110V DC coil.

04.10 Control switches

All control switches shall be rotary type, having a cam operated contact mechanism. Switch shall have pistol grip handles for circuit breaker control and knob type handle for other applications.

Ammeter selector switches shall have make before break feature on its contacts. The selector switch shall generally have 4 positions for reading 3 phase currents and fourth position for off. The voltmeter selector switch shall also have 4 positions. Three positions shall be used to measure phase to phase voltage and fourth shall be OFF position.

04.11 Push buttons

Push button colours shall be as follows:

Start/close	:	Green
Stop /open/emergency	:	Red
Reset/test	:	Yellow / Black /white

04.12 Indications

Clustered LED type indicating light with minimum 8mm diameter size shall be provided for indications.

Breaker positions (Close, Open, spring-charged, test position, service position) electrical indications, with colors as given below, shall also be provided:

Breaker 'Close'	:	Red lamp
Breaker 'Open'	:	Green lamp

@MECON Limited; all rights reserves

Breaker auto-trip	:	Amber lamp Trip
circuit healthy	:	White lamp
Spring charging	:	Blue lamp

Outgoing feeder (Close, Open, trip) electrical indications, with colors as given below, shall also be provided:

'Close'	:	Red lamp
'Open'	:	Green lamp
'Trip'	:	Amber lamp

Phase sequence indicating device shall be provided on incomer panels. This shall be of AE make or equivalent with push button and contactor of 110V DC coil.

04.13 Auxiliary relays/contactors

Auxiliary relays/contactors shall generally be used for interlocking and multiplying contacts. Auxiliary contact shall be capable of carrying the maximum anticipated current.

Fail Safe Scheme shall be provided for all outgoing feeders. Required no. of auxiliary contactors in tripping and closing circuit for transformer feeders shall be provided by vendor. Detailed scheme shall be reviewed during detail engg. without any time and cost implication.

04.14 Timers

For re-acceleration duty, timers unless otherwise stated, shall be pneumatic type and shall have adjustable time setting of 0-60 seconds. Alternatively static timer may be considered. The time settings, where specified, shall be accurately set before despatch of the switchboard. Timer provided for control of capacitor feeder shall have minimum setting of 0-5 minutes.

04.15 Miniature circuit breaker

MCB shall provide high mechanical and electrical life, reliable protection of circuits against overload and short circuit and shall have minimum breaking capacity of 9kA unless otherwise specified. Positive ON/OFF indication shall be provided.

Earth leakage circuit breaker shall have earth sensitivities range 30mA to 300mA unless otherwise specified.

04.16 Capacitor Unit

Unless specified in the data sheet, all capacitors shall be MPP (Metalized Polypropylene) self-healing, double layer type. Single layer shall not be acceptable.

Each capacitor unit shall be a self-contained, with a rating at 50 Hz required to give approximate capacity as specified in the data sheet. As far as possible, capacitors of larger sized units shall be provided.

The rated voltage of the capacitor unit shall be so selected that it would be nearer to actual service voltage prevailing in the network for most of the time and not necessarily to the rated system

@MECON Limited; all rights reserves

MECON LTD Delhi

voltage or nominal system voltage. Service voltage shall be arrived at after considering overvoltage due to reactor and harmonics in the system. Series reactor causes a rise in the voltage across capacitor terminals. If the capacitor voltage is rated higher than the actual service voltage, then the capacitor output at service voltage will reduce. However, the capacitor voltage shall be slightly higher than or equal to the actual service voltage.

The temperature rise above the specified ambient of any part of the capacitor unit and associated equipment's shall not exceed the maximum permissible temperature as specified in IS 13340.

Each capacitor unit active parts shall be non-inflammable dielectric immersed in suitable impregnant, self-cooled, and hermetically sealed. The impregnant shall be non-PCB (Polychlorinated Biphenyl) oil.

Each capacitor unit shall be individually protected by an HRC fuse suitably rated for load current and interrupting capacity, so that a faulty capacitor unit shall be disconnected by the fuse. An operated fuse shall give visual indication so that it may be detected during periodic inspection. The fuse breaking time shall coordinate with the pressure built up within the capacitor unit to avoid explosion. Mounting of the individual fuse may be internal or external to the capacitor case.

Each capacitor unit case shall be earthed to a separate earth bus in ungrounded system.

Each capacitor unit shall be fitted with directly connected continuously rated, low loss discharge device to discharge the capacitors and reduce the voltage to less than 50volts within one minute for capacitors rated upto 650V and ten minutes for capacitors rated above 650V.

There shall not be switch, fuse or any other isolating device between the capacitor unit and the discharging device.

Bushings shall be of porcelain and shall be joined to the case by soldering/welding or other method which ensures an adequate and permanent seal.

The capacitor unit with its accessories shall be suitable for installation in metal enclosed panel.

04.17 Series Reactor

The reactor design shall be such that the capacitor banks shall be able to withstand the overload due to harmonics. The series reactor shall be -

- Completely sealed unit.
- Air core air cooled or air core oil cooled.
- Designed to have a linear V-I characteristics upto 150% of rated capacitor current.
- Designed to have temperature rise within limits as specified in relevant standard.
- Magnetically or non-magnetically shielded depending on requirements.
- Shall be suitable for installation in metal enclosed panel

04.18 Soft Starters

The soft starter shall apply a slowly increasing voltage to the motor, providing smooth acceleration whilst drawing the minimum necessary starting current.

@MECON Limited; all rights reserves

A microprocessor-based circuit shall control the starter, providing stable and repeatable performance in both 3 wire and 6 wire (inside delta) motor connections, with and full control, status and diagnostic information clearly displayed using LED indicators.

In each phase the power module shall comprise two back-to-back SCRs with integral semiconductor fuses incorporated onto the input busbar. Phase modules shall be interchangeable between phases within the starter, and between starters of the same rating without the need for calibration or adjustment. The low voltage control circuitry shall be isolated from the SCR assembly, and employ pulse transformers to carry the SCR firing signals. Metal Oxide Varistors and RC snubber networks shall be used to provide transient and false firing protection.

The soft starter shall provide the following (but not limited to) range of adjustments as applicable:

- Ramp up time: 1-60s
- Ramp down time: 1-120s
- Pump Control Ramp adjustable pump stop profile
- Current Limit (Starting): 200-450% In
- Pulse start: 450% current for 0.5-2.0s
- Motor FLC: 50-100% of starter FLC

The soft starter shall protect against the following (but not limited to) as applicable:

- Phase imbalance
- Phase reversal
- SCR faulty or shorted SCR
- Motor Thermal Overload
- Soft Start thermal overload
- Over voltage
- Under voltage
- Locked Rotor
- Excessive Starts per hour
- Phase loss input / output
- Motor output loss

The soft starter shall provide the following indications (but not limited to) as applicable:

- Line failure
- Phase imbalance
- Over temperature – motor
- Over temperature – Soft Starter
- Shorted Thyristor
- Open Thyristor
- Locked Rotor
- Overload / Underload
- Motor output loss
- Phase imbalance

@MECON Limited; all rights reserves

MECON LTD, Delhi

- Over voltage
- Under voltage
- Excessive Starts
- Phase reversal

05.00 INTERFACE REQUIREMENS

Switchboard interface requirement with station PLC shall be as specified in the data sheet. All analogue/digital/serial links signals shall be wired to Marshalling Panel which shall be part of switchboard through inter panel wiring. Vendor shall provide suitable transducers / contacts / ports for signals in respective feeders accordingly.

06.00 Protection and Metering Scheme of Plant:

The protective system shall be selected and coordinated to ensure the following:

- Protection of equipment against damage, which can occur due to internal or external short circuits or atmospheric discharges.
- Uninterrupted operation of those parts of the system, which are not affected by the fault.
- Personnel and plant safety.

All the protection relays shall be of numerical type unless otherwise specified.

Protection relays shall be provided as specified below or in SLD. In general, quick acting relays (with time delays, if necessary) shall be used and all fault tripping shall be done through high-speed tripping relays.

MECON LTD Delhi

@MECON Limited; all rights reserves

RELAY PROTECTION SYSTEM

(Figure inside bracket refers to note below) √Applicable

Description	Relay Number	HV Transformer Feeder		Motor Feeder	Outgoing Breaker Feeder		Incomer Feeder		Bus Coupler
		Secondary winding Voltage≥6.6kV	Secondary winding Voltage≤0.433kV	HV	HV Plant Feder	MV PCC/PMCC	HV	MV PCC/PMCC	
IDMT Over current	51	√	√	-	√	√ (4)	√	√ (4)	√
IDMT Earth fault	51N	√ (7)	-	-	√	√ (4)	√	√	√
Back up Earth Fault (Secondary Neutral)	51G	√	√	-	-	-	-	-	-
Motor protection relay (50, 50N, 46, 49, 50LR)	99	-	-	√	-	√ (8)	-	-	-
Inst. Restricted earth fault (secondary side)	64R	√	√ (16)	-	-	-	-	-	-
Inst. Over current	50	√	√	-	-	-	-	-	√
Inst. Earth Fault	50N	√ (6)	√	-	-	-	-	-	-
Differential Protection	87	√ (1)	-	√2	√ (3)	-	-	-	-
Lockout or High speed tripping	86	√	√	√	√	√	√	√	√
Trip circuit supervision	95	√	√	√	√	-	√	-	-
Transformer auxiliary	94	√	√	-	-	-	-	-	-
Under voltage with timer	27/2	-	-	√13	-	-	√ (5)	√5)	-

@MECON Limited; all rights reserves

Synchronism Check Relay	25	-	-	-	-	-	-	-	√
Phase- Balance Current Relay	46	-	-	-	-	-	-	√ (12)	-
Phase Sequence Voltage Relay	47	-	-	-	-	-	-	√ (12)	-
Over Voltage Relay	59	-	-	-	√ (10)	-	-	√ (12)	-
Frequency Relay	81	-	-	-	-	-	-	√ (12)	-

Note:

1. For transformers rated 5 MVA and above.
2. For motors rated 1500kW and above or does not have standby HV motor/pump.
3. For critical/long feeders
4. At remote substation where DC supply is not envisaged, 415V switchboard shall have inherent releases instead of relays.
5. Wherever auto transfer feature is provided.
6. Instantaneous earth fault 50N shall be provided only for transformer with star primary
7. Directional IDMT earth fault 67N shall be provided for transformer with star primary
8. For motor feeder rated 55kW and above

MECON LTD, Delhi

@MECON Limited; all rights reserves

Metering shall be provided to keep a record of power consumption and supervision of all concerned parameters like current, voltage, power, frequency, power factor etc. as specified in SLD. Multi-Function meter (MFM) shall be provided where applicable.

Metering shall be provided to keep a record of power consumption and supervision of all concerned parameters like current, voltage, power, frequency, power factor etc. as specified in SLD. Multi-Function meter (MFM) shall be provided where applicable.

Feeder Type	A	V	Hz	PF	MW	MWH	Hour Run	MVAR	MVAH	MVA
HV Incomer	X	X	X	X	X(see note-2)	X	-	X	X(see note-2)	X(see note - 1, 2)
HV Bus Tie	X	-	-	-	-	-	-	-	-	-
HV Transformer	X	-	-	-	-	X	-	-	-	-
HV Bus P.T.	-	X	-	-	-	-	-	-	-	-
HV Plant Feeder	X	-	-	-	-	X	-	-	-	-
HV Motor	X	-	-	-	-	X kWh	X	-	-	-
HV Capacitor	X	X	-	X	-	-	-	-	-	-
PCC/PMCC Incomer	X	X	-	X	-	X kWh	-	-	-	-
PCC/PMCC Bus Tie	X	-	-	-	-	-	-	-	-	-
PCC Bus P.T	-	X	-	-	-	-	-	-	-	-
ACB Outgoing	X	-	-	-	-	X kWh	-	-	-	-
MV Motor	X	-	-	-	-	X kWh	X	-	-	-
MCC/ASB Incomer	X	X	-	-	-	X kWh	-	-	-	-

@MECON Limited; all rights reserves

MCCB/SFU O/G	X	-	-	-	-	X kWh	-	-	-	-
LDB Incomer	X	X	-	-	-	X kWh	-	-	-	-
DG Set	X	X	X	X	X KW	X kWh	X	-	-	-

Notes:

1. MVA meter in Grid Incomers shall include maximum demand indication also.
2. MW, MVAR, MVA, MVAH meters shall be provided for only Grid Incomer feeders.
3. Field Ammeters are to be provided for all motors rated above 5.5kW.
4. Volt meters and Ammeters shall be of analog type.
5. Other meters shall be of composite type multi-function meters shall be provided with MODBUS TCP/IP link and shall be interfaced with Flex I/O system.
6. Trivector meter shall also be provided with MODBUS TCP/IP link and shall be interfaced with Flex I/O system

07.00 DRAWINGS & DOCUMENTS

Vendor shall furnish all data/ GA & Construction drawings/documents specified in the vendor data requirement.
Approval of the drawing shall not relieve the manufacturer of his responsibility to equipment conforming to the relevant specification and standards or for any mistakes, errors or omissions in the drawing.

Following Drawings & Documents shall be submitted after award of contract for approval:

a) Schedule of Vendor Documents
b) Technical Data Sheets (Duly Filled-In)
c) Dimensional / Assembly Drawings
   -GA Drawings (Elevation and Plan) including clearance requirements
   -Installation Plans including foundation, cutout and mounting details
   - Cross Sectional Views
   - Cubicle Arrangement Drawings
   - Component Drawings
   - Name Plate Drawings
   - Cable Termination Arrangement Drawings

d) Detailed construction drawings in Plan and section
e) Supporting structure details drawings
f) Civil foundation assignment drawings
g) Electrical Wiring Drawings
   - Single Line Diagrams

@MECON Limited; all rights reserves

- Schematic Diagrams
- Wiring Diagrams and Terminal Details
- Interpanel Wiring Diagrams
- Modbus mapping details
- Ladder logic diagrams in PDF and Native form

h) Bill Of Materials.
i) Calculations.
- Bus Bar Sizing Calculation
- Calculation of CT/ PT burdens, Vk, Im, Rct etc. for class PS CT's
- Panel heat load calculations

j) Relay Characteristics Curves & Total discrimination chart
k) Auxiliary Power Requirement Data (AC & DC)
l) QA Plan Of Vendor
m) Inspection Plan And Testing Procedure (For review by inspection)
n) Test Records
o) Type Test Certificates
p) List of Commissioning Spares
q) List of Maintenance Spares
r) List Of Special Tools & Tackles
s) Data Book /Manual
- Installation Manual
- Operating / Maintenance manual
-. Catalogues / Brochures

t) Equipment storage procedure at site
u) Packing and shipping list

08.00 COMPLETENESS OF EQUIPMENT

All fittings, accessories or apparatus which may not have been specially mentioned in this specification but which are otherwise necessary for satisfactory working of Isolator shall be deemed to have been included in the scope of supply.

09.00 INSPECTION AND TESTING

During fabrication, switchboard shall be subject to inspection by Purchaser or by an agency authorized by the Purchaser. Vendor shall furnish all necessary information concerning the supply to Purchaser. The Purchaser shall have free access to the Vendor's works for the purpose of inspecting the process of manufacture in all its stages and he will have the power to reject any material, which appears to him to be of unsuitable description or of unsatisfactory quality.

Switchboards shall be tested in accordance with applicable standards. All acceptance and routine tests as follow shall be carried out at Vendor's work under his care and expense. Vendor's internal test

@MECON Limited; all rights reserves

MECON LTD, Delhi

reports shall be provided for Purchaser's review prior to inspection and testing.

- Visual and dimensional check of complete switchboard assembly and all components
- Operational check of all switchboard components under normal and worst voltage conditions.
- Verification of Bus bar insulation, support arrangement, creepage distances and clearances with respect to type tested assembly drawings.
- Verification of Bill of material
- Verification of Rack-in and Rack-out of trolleys.
- Verification of Interchange ability of trolleys in identical feeders.
- Verification of wiring for control and auxiliary circuits and auxiliary contacts.
- Verification of operation for all control functions and interlocks as per schematic diagrams in Test and Service position.
- Verification of relays operation through secondary injection
- Verification of operating mechanisms, mechanical locking and interlocking systems, safety shutters, partitions and shrouds
- Verification of communication between relays and Data concentrator / MMI (If applicable)
- MMI operation and functional checks (If applicable)
- Measurement of resistance of main circuit
- Insulation resistance of main, auxiliary and control circuit before and after HV test.
- Power Frequency Voltage withstand test on main, auxiliary and control circuits

Type tests as follows shall be performed at Vendor's work or independent approved testing laboratory under his care and expense. Type test certificates approved by CPRI or equivalent approved testing agency may be acceptable in lieu of actual type tests on identical switchboard subject to Purchaser approval.

- Short circuit making and breaking tests
- Temperature Rise Test
- Degree of protection
- Impulse and Power Frequency Withstand
- Short circuit test duties
- Internal Arc Test (If specified)

Acceptance, routine and type tests shall be witnessed by Purchaser or an agency authorized by the Purchaser. Prior notice of minimum 4 weeks shall be given to the Purchaser for witnessing the tests.

For equipment bought from other sub-suppliers, certified test reports of tests carried out at the sub-supplier's works shall be submitted. Normally all routine tests as specified in the relevant standards shall be conducted by the sub-supplier at his works.

10.00 PACKING AND DISPATCH

All the equipment shall be divided into several shipping sections for protection and ease of handling during transportation. The equipment shall be properly packed for selected mode of transportation i.e. by ship/rail or trailer. The panels shall be wrapped in polyethylene sheets before being placed in wooden crates /cases to prevent damage to the finish. Crates /cases shall have skid bottoms for handling. Special precaution notations such as Fragile, This side up, center of gravity, weight,

@MECON Limited; all rights reserves

Purchaser's particulars, Purchase number etc. shall be clearly marked on the package together with other details as per purchase order.

The equipment may be stored outdoors for long periods before installation. The packing should be suitable for outdoor storage in areas with heavy rains and high ambient temperature unless otherwise agreed.

****

MECON LTD, Delhi

@MECON Limited; all rights reserves

REV: 0
EDITION: 3

TECHNICAL SPECIFICATION

FOR

POWER AND CONTROL CABLES

DOCUMENT No: : MEC/05/E9/TS/09

Prepared & Issued by

ELECTRICAL SECTION
MECON LIMITED
(A Govt. of India Undertaking)
13th& 15th Floor, North Tower, SCOPE MINAR,
Laxmi Nagar District Centre,
Delhi-110092 (India)

@MECON Limited; all rights reserves

MECON LTD, Delhi

Table of Contents

S.No.	DESCRIPTION	PAGES
01.00	INTENT	4
02.00	CODES AND STANDARDS	4
03.00	CONSTRUCTIONAL REQUIREMENTS	6
04.00	INSPECTION AND TESTING	8
05.00	PACKING AND DISPATCH	10

Rev	Date	Prepared by	Checked by	Approved by
0	11.07.2025	Chirosmita Banerjee	Saurabh Singh	Pankaj Shrivastava

© Copyright MECON Limited – All rights reserved.
THIS DOCUMENT IS THE SOLE PROPERTY OF MECON AND ISSUED FOR THE SPECIFIC PROJECT MENTIONED HEREIN. THIS IS NOT TO BE COPIED OR USED FOR ANY OTHER PROJECTS UNLESS EXPLICITLY PERMITTED BY MECON.

@MECON Limited; all rights reserves

AMENDMENT STATUS

(OLD NUMBER OF STANDARD: MEC/TS/05/E9/09)

Sl. No.	Clause / Paragraph / Annexure / Exhibit / Drawing Amended	Page No.	Revision	Date	By (Name)	Verified (Name)
1	Document Number replaced with new number as **MEC/05/E9/TS/09.**	All	Rev 0/ Ed 3	11.07.2025		
2	Section re-name as Electrical Section (Oil & Gas SBU) Delhi	All	Rev 0/ Ed 3	11.07.2025		

@MECON Limited; all rights reserves

MECON LTD, Delhi

1.0 INTENT

a. The intent of this standard specification is to define the general requirements for design, manufacture, assembly and testing at manufacturer's works, packing, transportation and receipt at site with all materials and accessories of **Power and Control Cables.**

b. Bidder shall also refer SOR item for details/requirements as part of the project need.

2.0 CODES AND STANDARDS

The equipment shall comply with the requirements of latest revision of following standards issued by BIS (Bureau of Indian Standards), unless otherwise specified:

IS 209		Zinc ingot
IS 1554 : Part 1		PVC insulated (heavy duty) electric cables: Part 1 For working voltages upto and including 1100V
IS 3961 : Part 2		Recommended current ratings for cables: Part 2 PVC insulated and PVC sheathed heavy duty cables
IS 3975		Mild steel wires, formed wires and tapes for armouring of cables
IS 5831		PVC insulation and sheath of electric cables
IS 7098		Cross linked polyethylene insulated PVC sheathed cables
IS 8130		Conductors for insulated electric cables and flexible cords
IS 10418		Drums for electric cables.
IS 10462 : Part 1		Fictitious calculation method for determination of dimension of protective coverings of cables: Part 1 Electrometric and thermoplastic insulated cables
IS 10810: Part 41		Methods of test for cables Part 41: Mass of zinc coating on steel armour
IS 10810 : Part 58		Methods of test for cables Part 58: Oxygen index test
IS 10810 : Part 61		Methods of test for cables: Part 61 Flame retardant test
IS 10810 : Part 62		Methods of test for cables: Part 62 Fire resistance test for bunched cables
IEC 60332-3		Tests on electric and optical fibre cables under fire conditions
IEC 60502		Power cables with extruded insulation and their accessories for rated voltages from 1kV (Um = 1.2kV) up to 30kV (Um = 36kV)
IEC 60811		Electric and optical fibre cables - Test methods for non-metallic materials
ASTM D2863		Standard Test Method for Measuring the Minimum Oxygen Concentration to Support Candle-Like Combustion of Plastics (Oxygen Index)
ANSI/NEMA WC 70-2009/ICEA		Power cables rated 2000 volts or less for the distribution of electrical energy

@MECON Limited; all rights reserves

S- 95-658-2009		
ANSI/NEMA WC 71- 1999/ICEA S-96-659-1999		Standard for non-shielded cables rated 2001-5000V for use in the distribution of Electric Energy
ANSI/NEMA WC 74/ICEA S-93-639-2012		5-46kV shielded power cable for use in the transmission and distribution of electric energy
WC 7-1988		Cross-linked thermosetting polyethylene insulated wire and cable for transmission and distribution of electrical energy

Wherever the requirements in this specification are in conflict with any of the above Standards, the requirements under this specification shall be binding.

In case of any contradiction between various referred standards/ specifications/ data sheet and statutory regulations the following order of priority shall govern. However, stringent of the below shall be followed
Statutory regulations.
Schedule of Rate
Scope of Work/ Job specification.
Design Basis.
Data sheets.
Standard Specification.
Codes and standards.

3.0 CONSTRUCTIONAL REQUIREMENTS

3.1 General

The cables shall be suitable for laying in trays, trenches, ducts, and conduits and for underground-buried installation with uncontrolled backfill and possibility of flooding by water and chemicals.

Outer sheath of all PVC and XLPE cables shall be black in colour and the minimum value of oxygen index shall be 29 at 27 $\pm$ 2 °C. In addition suitable chemicals shall be added into the PVC compound of the outer sheath to protect the cable against rodent and termite attack.

All cables covered in this specification shall be flame retardant (FR) unless specified otherwise in the data sheet. The outer sheath of PVC and XLPE cables shall possess flame propagation properties meeting requirements as per IS 10810 : Part-62 category AF.

Sequential marking of the length of the cable in metres shall be provided on the outer sheath at every one metre. The embossing / engraving shall be legible and indelible.

The overall diameter of the cables shall be strictly as per the values declared by the manufacturer in the technical information subject to a maximum tolerance of $\pm$ 2mm up to overall diameter of 60mm and $\pm$ 3mm for beyond 60mm.

@MECON Limited; all rights reserves

PVC / Rubber caps shall be supplied free of cost for each drum with a minimum of eight per thousand metre length. In addition, ends of the cables shall be properly sealed with caps to avoid ingress of water during transportation and storage.

The cables used in installation under the jurisdiction of Director General of Mines and safety (DGMS) shall be of copper conductor only, and shall have valid DGMS approvals for the specified locations. The word “Mining Cable” shall be embossed / engraved on the cable outer sheath as per the applicable Indian Standards.

3.2 PVC cables

All control cables for use on medium voltage systems shall be heavy-duty type, 650/1100V grade with copper conductor, PVC insulated, inner-sheathed, armoured and overall PVC sheathed unless specified otherwise in the data sheet.

The conductors shall be solid circular shape.

The core insulation shall be with PVC compound applied over the conductor by extrusion and shall conform to the requirements of type ‘A’ compound as per IS 5831. The thickness of insulation and the tolerance on thickness of insulation shall be as per Table 2 of IS 1554 : Part 1. Control cables having 6 cores and above shall be identified with prominent and indelible English numerals on the outer surface of the insulation. Colour of the numbers shall contrast with the colour of insulation with a spacing of maximum 50mm between two consecutive numbers. Colour coding for cables up to 5 cores shall be as per Indian Standard.

The inner sheath shall be applied over the laid-up cores by extrusion and shall be of PVC conforming to the requirements of Type ST-1 PVC compound as per IS: 5831. The minimum thickness of inner sheath shall be as per IS 1554 : Part 1. Single core cables shall have no inner sheath.

If armouring is specified for multicore cables in the data sheet, the same shall be by single round galvanized steel wires where the calculated diameter below armouring does not exceed 13mm and by galvanized steel trips where this dimension is greater than 13mm. Requirement and methods of tests for armour material and uniformity of galvanisation shall be as per IS-3975 and IS 10810 : Part 41. The dimension of Armour shall be as per method (b) of IS 1554 : Part 1. If armouring is specified for single core cables in the data sheet, the same shall be with H4 grade hard drawn aluminium round wire of 2.5mm diameter.

For mining cables, the size and type of armour shall be such that the combined conductance of armour shall be equivalent to 75 percent of the conductance of the largest conductor of the cable.

The outer sheath for the cables shall be applied by extrusion and shall be of PVC compound conforming to the requirements of type ST-1 compound as per IS 5831. The minimum and average thickness of outer sheath for unarmoured cables and minimum thickness of outer sheath for armoured cables shall be as per IS 1554 : Part 1.

If heat resisting PVC cables are specified in the data sheet, the following shall be the requirements:

It shall be possible to continuously operate the cable at a maximum conductor temperature of 85°C.

@MECON Limited; all rights reserves

PVC compounds used for HR PVC cable shall be as follows:

a) Conductor insulation - Type C

b) Inner Sheath - Type ST-2

c) Outer Sheath - Type ST-2

3.3 XLPE Cables

Power cables from 650/1100V grade up to and including 33 kV systems shall be Aluminium / Copper conductor, XLPE insulated, sheathed, armoured and overall PVC sheathed.

The conductors shall be solid for conductor of nominal area up to and including 6mm^2 and stranded beyond 6mm$^{2.}$ Conductors of nominal area less than 16mm^2 shall be circular only. Conductors of nominal area 16mm^2 and above may be circular or shaped as per IS 8130. Cables with reduced neutral conductor shall have sizes as per Table 1 of IS 1554 : Part 1.

The conductors of 3.3kV up to and including 33 kV systems shall be stranded and completed circular for all cables.

All cables rated 3.8 / 6.6 kV and above shall be provided with both conductor screening and insulation screening. The conductors shall be provided with non-metallic extruded semiconducting screen.

The core insulation shall be with cross linked polyethylene insulating compound dry cured, applied by extrusion. It shall be free from voids and shall withstand all mechanical and thermal stresses under steady state and transient operating conditions. It shall conform to the properties given in the Table -1 of IS 7098 : Part-2

The insulation screen shall consist of non-metallic extruded semi-conducting compound in combination with a non-magnetic metallic copper screen. Unless specified otherwise, the copper screen for all the three cores together for three core cables and individual core for single core cables shall be capable of carrying the single line to ground fault current value and the duration specified in the data sheet.

The conductor screen, XLPE insulation and insulation screen shall be extruded in one operation by 'Triple Extrusion' process to ensure perfect bonding between the layers. The core identification shall be by coloured strips or by printed numerals.

The inner sheath shall be applied over the laid up cores by extrusion and shall conform to the requirements of type ST-2 compound of IS 5831. The extruded inner sheath shall be of uniform thickness. In case of single core cables, there shall be extruded inner sheath between insulation metallic screen and armouring.

For multicore cables, the armouring shall be by galvanized steel strips as per method (b) of IS 7098 : Part 2. If armouring is specified for single core cables in the data sheet, the same shall be with H4 grade hard drawn aluminium round wire of 2.5mm diameter.

@MECON Limited; all rights reserves

MECON Delhi

The outer sheath of the cables shall be applied by extrusion over the armouring and shall be of PVC compound conforming to the requirements of Type ST-2 compounds of IS 5831. The minimum and average thickness of outer sheath for unarmoured cables and minimum thickness of outer sheath for armoured cables shall be as per IS 7098 : Part 2.

The thickness of the insulation, inner sheath shall be governed by values given in IS 7098 : Part 2.

Where specified, 1100V grade power cables shall also be XLPE insulated and shall meet the requirements specified in IS 7098 : Part-1.

4.0 INSPECTION AND TESTING

During fabrication, cables shall be subject to inspection by Purchaser or by an agency authorized by the Purchaser. Vendor shall furnish all necessary information concerning the supply to Purchaser. The Purchaser shall have free access to the Vendor's works for the purpose of inspecting the process of manufacture in all its stages and he will have the power to reject any material, which appears to him to be of unsuitable description or of unsatisfactory quality.

Cables shall be tested in accordance with applicable standards. All acceptance, routine, type and special tests as follows shall be carried out at Vendor's work under his care and expense. Vendor's internal test reports shall be provided for Purchaser's review prior to inspection and testing.

All routine tests, acceptance tests, type tests and additional type tests for improved fire performance shall be carried out as listed in IS 1554 : Part 1, and IS 7098 : Part 2 on PVC and XLPE insulated cables respectively.

The test requirement for PVC insulation and sheath of cables shall be as per IS 5831.

Test for Resistance to Ultra Violet Radiation: This test shall be carried out as per DIN 53387 or ASTM G-53 on outer sheath. The retention value of tensile strength and ultimate elongation after the test shall be minimum 60% of tensile strength and ultimate elongation before the test. Test certificates with respect to this test (not older than one year) from recognized testing laboratory to be furnished for review by Purchaser before dispatch clearance of cables. In case test certificates are not available, test is to be conducted by vendor at his own cost in any recognized test laboratory or in house testing laboratory, before dispatch clearance of cables. Sampling for this test is to be done randomly once for each order, provided outer sheath remains same.

Acceptance tests as per IS 1554 : Part 1 and IS 7098 : Part 2 and the following special tests to be performed on the cables as per sampling plan.

a)**Accelerated water absorption test** for insulation as per NEMA WC-5 (For PVC insulated cables) and as per NEMA WC-7 (for XLPE insulated cables). Test certificates with respect to this test (not older than one year) from recognized testing laboratory to be furnished for review by Purchaser. In case test certificates are not available, test is to be conducted by Vendor at his own cost in any recognized test laboratory or in house testing laboratory, before dispatch clearance of cables. Sampling for this test is to be done randomly once for each order, provided type of

@MECON Limited; all rights reserves

insulation remains same.

b) **Dielectric Retention Test:** The dielectric strength of the cable insulation tested in accordance with NEMA WC-5 at 75 ± 1°C shall not be less than 50 % of the original dielectric strength. (For PVC insulated cables). Test certificates with respect to this test (not older than one year) from recognized testing laboratory to be furnished for review by Purchaser before dispatch clearance of cables. In case test certificates are not available, test is to be conducted by vendor at his own cost in any recognized test laboratory or in house testing laboratory, before dispatch clearance of cables. Sampling for this test is to be done randomly and once for each order.

c) **Oxygen Index Test:** The test shall be carried out as per ASTM D 2863 or applicable Indian Standard specifications. Sampling is to be done for every offered lot / size as per sampling plan.

d) **Flammability Test:** The test shall be carried out on finished cable as per IS 10810: (Part 61 & 62). Sampling for these tests is to be done randomly once for each order, provided outer sheath remains same. The acceptance criteria for tests conducted shall be as under:
Part 61- The cable meets the requirements if there is no visible damage on the test specimen within 300mm from its upper end.

Part 62- The maximum extent of the charred portion measured on the test sample should not have reached a height exceeding 2.5 m above the bottom edge of the burner at the front of the ladder.

e) Test for rodent and termite repulsion property: The vendors shall furnish the test details to analyse the property by chemical method. Sampling is to be done for every offered lot / size as per sampling plan.

Acceptance, routine, type and special tests shall be witnessed by Purchaser or an agency authorized by the Purchaser. Prior notice of minimum 4 weeks shall be given to the Purchaser for witnessing the tests.

5.0 PACKING AND DISPATCH

Cables shall be despatched in non-returnable wooden or steel drums of suitable barrel diameter, securely battened, with the take-off end fully protected against mechanical damage. The wood used for construction of the drum shall be properly seasoned, sound and free from defects. Wood preservatives shall be applied to the applied to the entire drum. Ferrous parts used shall be treated with a suitable rust preventive finish or coating to avoid rusting during transit or storage.

On the flange of the drum, necessary information such as project title, manufacturer's name, type size, voltage grade of cable, length of cable in metres, drum no., cable code, BIS certification mark, gross weight etc. shall printed. An arrow shall be printed on the drum with suitable instructions to show the direction of rotation of the drum.

Unless otherwise specified, cables shall be supplied in drum lengths as follows:

@MECON Limited; all rights reserves

MV Cables

-	Multicore Power cables upto 6mm^2	:	1000m
-	Multicore Power cables from 10mm^2 up to 300mm^2	:	500m
-	Single Core Power cables up to 630mm^2	:	1000m
-	Control cables up to 61 cores	:	1000m

HV Power cables –up to 11k V (E) Grade

-	Three Core cables up to 400mm^2	:	500m
-	Single Core cables up to 400mm^2	:	1000m
-	Single Core cables above 400mm^2 and up to 630mm^2	:	750m

HV Power Cables –Above 11 kV (E) Grade and up to 33kV (E) Grade

-	Three Core cables up to 300mm^2 grade	:	350m
-	Single Core cables up to 400mm^2	:	1000m
-	Single Core cables above 400mm^2 and upto 630mm^2	:	500m

A tolerance of plus 3% (no negative tolerance) shall be permissible for each drum. However, overall tolerance on each size of cable shall be limited to + 2%. Offers with short / non-standard lengths are liable for rejection. If non-standard drum lengths are specified in the data sheet, the same shall be supplied.

****

MECON LTD, Delhi

@MECON Limited; all rights reserves

REV: 0
EDITION: 3

TECHNICAL SPECIFICATION

FOR

AC UPS

DOCUMENT No. : MEC/05/E9/TS/10A

Prepared & Issued by

ELECTRICAL SECTION
(Oil & Gas SBU)
MECON LIMITED
(A Govt. of India Undertaking)
13th& 15th Floor, North Tower, SCOPE MINAR,
Laxmi Nagar District Centre,
Delhi-110092 (India)

@MECON Limited; all rights reserves

MECON LTD, Delhi

INDEX

Sl. No.	Description	Page No
1.0	INTENT	4
2.0	CODES ANDSTANDARDS	4
3.0	GENERAL REQUIREMENTS	5
4.0	SITE CONDITIONS	6
5.0	TECHNICAL REQUIREMENTS	6
6.0	CONSTRUCTION	15
7.0	ALARM, CONTROL, INDICATION AND METERING	17
8.0	INSPECTION AND TESTING	20
9.0	SITE ACCEPTANCE	24
10.0	PACKING AND DISPATCH	24

MECON LTD, Delhi

Rev	Date	Prepared by	Checked by	Approved by
0	11.07.2025	Mukesh Jaiswara	Saurabh Singh	Pankaj Shrivastava

© Copyright MECON Limited – All rights reserved.
THIS DOCUMENT IS THE SOLE PROPERTY OF MECON AND ISSUED FOR THE SPECIFIC PROJECT MENTIONED HEREIN. THIS IS NOT TO BE COPIED OR USED FOR ANY OTHER PROJECTS UNLESS EXPLICITLY PERMITTED BY MECON.

@MECON Limited; all rights reserves

AMENDMENT STATUS

(OLD NUMBER OF STANDARD: MEC/TS/05/E9/10A)

Sl. No.	Clause / Paragraph / Annexure / Exhibit / Drawing Amended	Page No.	Revision	Date	By (Name)	Verified (Name)
1	Document Number replaced with New number as **MEC/05/E9/TS/10A**	All	Rev 0/ Ed 3	11.07.2025		
2	Section re-name as Electrical Section (Oil & Gas SBU) Delhi	All	Rev 0/ Ed 3	11.07.2025		

MECON LTD, Delhi

@MECON Limited; all rights reserves

1.0 INTENT

The intent of this standard specification is to define the general requirements for design, manufacture, assembly and testing at manufacturer's works, packing, transportation and receipt at site with all materials and accessories of AC UPS.

2.0 CODES ANDSTANDARDS

The equipment shall comply with the requirements of latest revision of following standards issued by BIS (Bureau of Indian standards) unless otherwise specified:

IS5	Colours for ready mixed paints and enamels
IS1248	Direct acting indicating analogue electrical measuring instruments and their accessories
IS2705	Current Transformers
IS 3700 :Part7	Essential ratings and characteristics of semiconductor devices - Part VII : Reverse blocking triode thyristors
IS 3715 :Part4	Letter symbols for semiconductor devices: Part 4 thyristors
IS4411	Code for designation of semi-conductor devices
IS5001	Guide for preparation of drawings of semiconductor devices IS5469
	Code of practice for the use of semi-conductor junction devices IS7204
	Stabilized power supplies dc output
IS12021	Control transformers for switchgear and controlgear for voltages not exceeding 1000VAC
IS13314	Solid state inverters run from storage batteries
IS13703	LVfusesforvoltagenotexceeding1000VACor1500VDC
IS14901	Semiconductor devices - Discrete devices and integrated circuits IS:10918
	Vented type nickel cadmium batteries
IS:16049	Secondary cells and batteries containing alkaline or other non-acid electrolytes- sealed Nickel Cadmium prismatic rechargeable single cell
IS/IEC60529	Degree of protection provided by enclosures (IP code) IS/IEC60947

@MECON Limited; all rights reserves

MECON LTD, Delhi

	Low voltage switchgear and controlgear
IEC60146-1-1	Semiconductor converters – General requirements and line commutated converters – Part 1-1 : Specification of basic requirements
VDE-0875	Radio-frequency disturbance characteristics – Limits and methods of measurement
IEEE 519	IEEE Recommended Practices and Requirements for Harmonic Control in Electrical Power Systems

In case of imported equipment, standards of the country of origin shall be applicable if these standards are equivalent or stringent than the applicable Indian standards.

The equipment shall also conform to the provisions of Indian Electricity rules and other statutory regulations currently in force in the country.

In case Indian standards are not available for any equipment, standards issued by IEC/BS/IEEE/NEMA/VDE or equivalent agency shall be applicable.

In case of any contradiction between various referred standards / specifications / data sheet and statutory regulations, the following order of priority shall govern:

-Statutory regulations.
-Schedule of Rate
-Scope of Work/ Job specification.
-Design Basis.
-Data sheets.
-Standard Specification.
-Codes and standards.

However, the vendor shall bring any such contradiction to the notice of Purchaser for prior approval.

3.00 GENERAL REQUIREMENTS

The offered equipment shall be brand new with state of art technology and proven field track record. No prototype equipment shall be offered.

Vendor shall ensure availability of spare parts and maintenance support services for the offered equipmentatleastfor15yearsfromthedateofsupply.

Vendor shall give a notice of at least one year to the end user of equipment before phasing out the product/spares to enable the end user for placement of order for spares and services.

The Online AC UPS system shall be an integrated system comprising static rectifier/chargers, batteries, static inverters, static switches, manual by pass switch, AC distribution board, voltage stabilizer in bypass, isolating and protection devices and all other equipment/ accessories required for completeness of the system

@MECON Limited; all rights reserves

MECON LTD. Delhi

whether specifically mentioned herein or not, but necessary for completeness and satisfactory performance of the system.

The Online AC UPS system shall be suitable to feed all loads connected to the output which are primarily instruments, DCS, computers, disc drives and other SMPS equipment leading to high crest factor of the load. The main station UPS as well as SV-UPS systems shall simultaneously feed both sensitive loads such as instrumentation panels and shall also cater to non-sensitive loads such as electric valve actuator motor and cathodic protection transformer cum rectifier units etc. Vendor shall design the system in such a way that the output voltage of UPS shall recover in milli seconds (maximum in 1-cycle) because of operation of non-sensitive loadsandshallmaintaintheoutputvoltageofUPSwithin240V+/-1%sothat the functionality of sensitive loads will not get affected under any circumstances because of fluctuation in the output voltage of UPS. This is a very important aspect and vendor shall demonstrate the same during FAT and also during SAT.

The inverter shall be transistorized (IGBT) type or with the latest proven technology. All components shall be of a high quality and reliability that satisfy with the requirements of a secure AC power to vital equipment with respect to performance, controlling, monitoring and safeguarding function in continuously operating petrochemical process units, petroleum refineries, gas processing facilities, utility and other miscellaneous industrial plants. Components shall be capable of withstanding the thermal and dynamic stresses resulting from internal and external short circuits and switching surges etc.

The design of the Online AC UPS shall be such as to minimize the risk of short circuits and shall ensure human and operational safety.

The vendor shall be responsible for design, engineering and manufacturing of the complete system to fully meet the intent and requirements of this specification and enclosed data sheets. Selection, sizing and suitability of all equipment and components used for UPS system shall be vendor's responsibility.

The Online ACUPS shall be single phase or three phase system as indicated in the datasheet.

4.00 SITE CONDITIONS

The Online AC UPS system shall be suitable for installation and satisfactory operation in a closed substation with restricted natural air ventilation in tropical, humid and corrosive atmosphere.

The Online AC UPS system shall be designed to operate under site conditions as specified in the data sheet. If not specifically mentioned therein, a design ambient temperature of 40°C and an altitude not exceeding 1000 metres above mean sea level shall be considered

5.00 TECHNICAL REQUIREMENTS

Input power supply

The Online AC UPS system shall be suitable for input power supply as defined in the data sheet. if not specified therein the Online AC UPS shall be suitable for the following input power supply.
Voltage: 415V ± 10% & 240V± 10% (As per datsheet)

@MECON Limited; all rights reserves

Frequency: 50Hz ± 3%

In addition to above variations, the input voltage may be subject to transient variations comprising voltage dip to 20% of normal voltage during motor start-up and voltage interruption during short circuit as well as frequency variations due to large motor start up. Online AC UPS system shall be designed to operate satisfactorily while deriving the input power from an emergency diesel generator set.

Online AC UPS system shall also operate satisfactorily on input power supply having:

a) The ratio of negative to the positive sequence components not exceeding 5% and

b) Total harmonic distortion of not more than 5%.

Total Harmonic Distortion is the ratio in percentage of r.m.s. value of the harmonic content to the r.m.s. value of the fundamental component of alternating quantity.

The incoming power supply to Online AC UPS system will be provided based on Online AC UPS system configuration as described below:

Online ACUPS System Configuration and Operational requirements
The Online AC UPS system shall have one of the following basic configurations as specified in the data sheet/drawings.

Single Online ACUPS with Bypass (with1X100%Batteries)

In Online AC UPS system having this configuration a single rectifier/charger and inverter shall be provided. Under normal conditions when AC mains power is available, the rectifier/charger shall simultaneously feed DC power to inverter as well as for float/rapid charging of the battery. The AC supply to loads shall be fed from inverter output. In case of any fault in the inverter, the load shall be automatically transferred to stabilized bypass supply and retransfer of load from stabilized bypass supply to the inverter shall be possible in auto as well as in manual mode without any interruption.

In case of AC input power failure or rectifier/charger failure, the battery shall supply power to inverter without any interruption. The rectifier/charger shall be designed for simultaneously feeding complete inverter load and for float/rapid charging the battery to its rated capacity. Rectifier/charger shall be equipped with 'On Line' automatic as well as manual charging facility.

Parallel Redundant Online ACUPS with bypass (with2X50%batteries)

In Online AC UPS system having this configuration two sets of rectifier/chargers and inverters shall be provided. Under normal conditions, when AC mains power is available, both the rectifier/chargers shall operate in parallel and supply DC power for float/rapid charging the battery and simultaneously to inverters. In case of failure in one rectifier/charger, the other rectifier/charger shall feed the complete load and the battery without any interruption; In case of incoming supply failure or failure of both rectifier/chargers the battery shall feed the inverters without any interruption. Each rectifier/charger shall

@MECON Limited; all rights reserves

be designed for simultaneously feeding complete inverter load and float/rapid charging of the battery to its rated capacity. Each rectifier/charger shall be equipped with 'On Line' automatic as well as manual charging facility.

Normally both inverters will be synchronized with each other and with stabilized bypass supply. Both inverters shall operate in parallel and share the load equally. When a disturbance/fault occurs in any one of the inverters, the faulty unit shall automatically get disconnected and the entire load shall be fed from the other inverter. In case both the inverters develop a fault, the complete load shall be transferred to stabilized bypass supply through the static switches and retransfer of load from stabilized bypass supply to the inverter shall be possible in auto as well as in manual mode.

Hot stand-by Redundant Online ACUPS with bypass

In Online AC UPS system having this configuration, the arrangement of rectifier/chargers, inverters and the operating philosophy is same as described in above clause, except that only one inverter shall be operating at one time. The other inverter shall not be sharing the load but shall be synchronized with the running inverter and stabilized bypass supply and remain ready to accept the load in case of fault in the running inverter. Retransfer of load from stabilized bypass supply to the inverter shall be possible in auto as well as in manual mode.

In all Online AC UPS system configurations, the facility for uninterrupted manual transfer in either direction through static switches shall also be provided.

For ease of maintenance, it shall be possible to isolate inverters and static switches from load through manually operated make before break switches. In case of larger rating Online AC UPS, where it is not possible to provide one power switch with make before break feature, combination of breakers with the control scheme having make before break logic may be provided which ensures momentary paralleling before tripping of selected breaker.

Parallel Redundant Online ACUPS with bypass and with additional charger (with2X50%batteries)

i.UPS system having this configuration, two sets of rectifiers and inverters (UPS - A&B) shall be provided. Under normal conditions, when AC mains power is available, both the rectifiers (UPS - A&B) shall operate in parallel and supply DC power for float/rapid charging the battery and simultaneously to inverters. In case of failure in one rectifier, the other rectifier shall feed the complete load and the battery without any interruption. In case of incoming supply failure or failure of both rectifiers the battery shall feed the inverters without any interruption. Each rectifier shall be designed for simultaneously feeding complete inverter load and float/rapid charging both the battery banks to its rated capacity. Each rectifier shall be equipped with 'On Line' automatic as well as manual charging facility.

ii. Normally both inverters will be synchronized with each other and with stabilized bypass

@MECON Limited; all rights reserves

supply. Both inverters shall operate in parallel and share the load equally. When a disturbance/fault occurs in any one of the inverters, the faulty unit shall automatically get disconnected and the entire load shall be fed from the other inverter. In case both the inverters develop a fault, the complete load shall be transferred to stabilized bypass supply through the static switches and retransfer of load from stabilized bypass supply to the inverter shall be possible in auto as well as in manual mode.

iii. In additional to 1Phase rectifiers (UPS - A&B), a 1Phase rectifier unit (UPS - C) shall also be provided in such a way that, this rectifier (UPS – C) shall operate only when DG supply is available. This 1Phase rectifier shall be designed for feeding inverter loads and only float charging load of both the battery banks to its rated capacity.

Interlock between 1Phase rectifiers (UPS - A&B) and 1Phase rectifier (UPS - C) shall be provided such that 1Phase rectifiers (UPS – A&B) and 1Phase rectifier (UPS – C) do not supply power simultaneously either during DG operation nor during Grid power supply as connection of both rectifiers UPS – A&B and UPS – C are before incoming MCCBs.

iv. In all UPS configurations, the facility for uninterrupted manual transfer in either direction through static switches shall also be provided.

v. For ease of maintenance, it shall be possible to isolate inverters and static switches from load through manually operated make before break switches. In case of larger rating UPS, where it is not possible to provide one power switch with make before break feature, combination of breakers with the control scheme having make before break logic may be provided which ensures momentary paralleling before tripping of selected breaker.

Online AC UPS Design and Performance Requirements

Incoming AC supply shall be converted to DC through three phase full wave-controlled rectifier/chargers. The rectifier/chargers shall operate according to the constant voltage current limiting principle and shall incorporate a "Soft Start" feature to gradually accept load on initial energizing.

The rectifier/charger section of the Online AC UPS system shall be capable of precise regulation to prevent damage to the battery. The output voltage of rectifier/charger DC bus without the battery shall be stabilized to within ±1% of set value during load variation between 0 to 100% of the rectifier/charger and specified mains input supply voltage variation.

Suitable protection shall be provided in the control circuits to guard against instability of phase-controlled rectifier/chargers due to electrical oscillations which may be present in the input supply as caused by emergency DG set.

The Online AC UPS system including the stabilized by-pass shall be galvanically isolated from input power supply system by providing double wound transformers. All transformers shall be natural air cooled, dry type suitable for location inside the panel. All rectifier/chargers shall also have a double wound transformer at its input.

@MECON Limited; all rights reserves

An RFI filter shall be provided. The production of radio frequency interference voltage shall not exceed the value of suppression grade N' as defined in VDE-0875. The performance of Online AC UPS system shall not get affected or in any way be degraded by the use of portable radio transmitter receiver in the vicinity of the Online AC UPS system and or Online AC UPS room.

Transient/surge protection circuit shall be provided in the input circuit to rectifier/chargers to protect the Online AC UPS from surges & voltage spikes.
The Online AC UPS system shall be designed to draw power from mains supply at a minimum power factor of 0.85 while working at rated load in normal operating Online AC UPS configuration.

The Online AC UPS shall be provided with automatic sequence and power walk in circuit(s) with time delay of upto 15 sec. such that the rectifier/chargers and inverters can start operating automatically when incoming AC power is restored allowing the Online AC UPS to be loaded automatically.

Facility for initial charging of batteries shall also be provided. The inverters may be disconnected during initial charging of the battery.

For battery sizing, the following factors shall be considered unless specified otherwise in the data sheet

a) Load Power Factor of0.8.
b) Minimum ambient temperature as specified in the datasheet.

Battery Current=(Inverter rated KVA x Rated load p.f)/(Inverter Efficiency*x End cell voltage x No. of cells)*at 50% load on each inverter for parallel redundant Online AC UPS

c) Aging factor of0.8.
d) Back up time specified in the data sheet.
e) Minimum end cell voltage for lead acid/VRLA battery 1.85V per cell and 1.0V per cell for Ni-Cd battery
f) Batterystateofchargefactorof0.95(Not applicable for LA batteries).

The rectifiers/chargers shall be designed to completely charge the Lead acid and Nickel cadmium batteries in a maximum time of 10 hours after complete discharge. Facilities shall be provided to initiate battery rapid charge operation by manual & automatic means. An auto charging sequence should be provided for the rapid and float charging based on current sensing. Rectifier/charger for VRLA battery shall be sized to provide boost charging of the battery up to 90% of rated Ampere hours within duration of 24 hours and to 100% within 4 days. In addition to above, the charging shall be transferred from rapid to float mode after a preset time adjustable through 0-24 hours timer as back up protection against overcharging.

The rectifier/chargers shall be sized based on the maximum inverter input load when inverter is delivering its rated output at 0.8 pf. lagging and recharge the battery to nominal rated capacity of the battery. The DC load imposed by the inverters shall be considered under the most severe operating conditions where only one rectifier/charger is operating but the Online AC UPS load is equally shared by all the inverters. The rating of each rectifier/charger shall not be less than the value calculated as follows:

For Lead Acid Batteries = Inverter input current + 0.14Ah (10 hr. Rating of the battery)

For Nickel- Cadmium Batteries = Inverter input current + 0.2Ah (5 hr. Rating of the battery)

@MECON Limited; all rights reserves

For VRLA Batteries = Inverter input current + 0.2Ah (10 hr. Rating of the battery)

where Inverter input current=(Rated kVA capacity of Online ACUPS X Load power factor)/(Battery charging voltage X Inverter efficiency)

The DC rectifier/chargers shall sense the battery charging current and adjust the DC bus voltage to maintain the charging current to preset level. A separate current limit circuit shall also be provided for adjustment of battery current. The rectifier/chargers shall be protected against reverse battery connection at DC link voltage bus. Subsequent to a discharge cycle when battery is connected to rectifier/charger, the battery current shall be monitored, controlled and limited to set value automatically irrespective of the inverter input current.

The battery may be taken out of service for maintenance, during which period it shall be possible for the inverter to continue operation by drawing power from the rectifier/charger. Ripple content at the DC link shall not exceed 2% even with battery disconnected.

Battery/ D.C. link shall be provided with a sensitive earth leakage protection.

The inverter shall be of the current limiting type (short circuit proof) and have nominal output voltage and frequency as specified in the data sheet. The inverter output voltage and frequency shall not exceed the operational tolerances, as measured at the output terminals of the unit during the following conditions of Online AC UPS loading:

- Loadvariationsbetween0-100%oftheratedoutputofOnlineACUPS
- Loadpowerfactorovertherangeof0.7laggingtounity.
- Load current waveform having a relative harmonic content varying between zero and 50%, the latter waveform having a crest factor not exceeding 2.5 and individual harmonics not exceeding the following values:

3rdharmonic	44% of fundamental
5thharmonic	33% of fundamental
7thharmonic	18% of fundamental
9thharmonic	7% of fundamental
11thharmonic	10% of fundamental

The Relative harmonic content is the ratio of the r.m.s. value of the harmonic content to the

r.m.s. value of the total non-sinusoidal periodic waveform i.e. relative harmonic content =

$\sqrt{[1-(\text{Rms value of the fundamental component of current or voltage})^2]}$/Rms value of total waveform of current or voltage

- DC input voltages over the range corresponding to battery rapid charge and battery discharge operation during the specified discharge times.

@MECON Limited; all rights reserves

MECON LTD, Delhi

The Online AC UPS output voltage waveform shall be sinusoidal with a relative harmonic content not exceeding 5% under linear load conditions, and not exceeding 15% under the non-linear load conditions specified above.

The inverter shall control the output voltage of the Online AC UPS such as to maintain synchronism with the mains bypass voltage during variations in mains frequency up to the limits specified.

During variations in mains frequency exceeding these limits, the inverter shall revert to internal frequency control.

It shall be possible to vary the inverter output voltage sleeplessly within ±5% of the specified output voltage. This adjustment shall be possible to be made when the inverter is in operation.

The steady state output voltage and frequency (free running) variation of inverters shall not exceed ±1 % from the set value for specified input power supply conditions from no load to full load condition and load power factor variation from 0.7 lag to1.0.

The Online AC UPS system shall be able to operate satisfactorily on rated loads (in kVA) with power factors in the range of 0.7 lag to 1.0. The overall efficiency of the Online AC UPS system shall not be less than 80% at rated load and 0.8p.f.

The Online AC UPS shall have capacity to deliver a minimum overload of 125% for 10 minutes and 150% for 10 sec. Online AC UPS shall be provided with current limit circuit to avoid excessive loading beyond its permissible overload with stand capability.

The inverters shall be 'phase locked' to the stabilized bypass power supply as long as stabilized bypass supply frequency remain within ± 3% of nominal. When bypass supply frequency variation exceeds the above limits, the inverters shall be de-linked from mains. Free running frequency tolerance limit shall not exceed ± 1%. Facility shall also be provided for adjustment of range of synchronizing frequency.

Unless otherwise specified, the Online AC UPS system output voltage variation shall not exceed

±10% and complete recovery to normal steady state shall be within 0.1 Sec. The phase angle disturbance shall be less than 120° ± 3% in case of 3 phase inverter. The above requirement shall be complied for following transient disturbances.

a) 100% step load and unload (For single Online ACUPS and hot stand by Online ACUPS)
b) 50% step load(for parallel redundant Online ACUPS)
c) Momentary interruption in power supply
d) Load transfer to stabilized by pass supply
e) Complete load transfer to other healthy inverter when one of the two parallel inverters develop a fault.

For 3 phase Online AC UPS system, the maximum output voltage and angle variation between the phases should not exceed 6% and 3 degrees respectively even under the condition of 100% unbalanced loading of the 3-phase output.

@MECON Limited; all rights reserves

Online AC UPS system shall be suitable both for floating output or earthing of one leg / star point in case of single phase/ three phase system respectively. The neutral of AC ups shall be solidly grounded.

The stabilized bypass supply shall be designed to regulate the output voltage within ±2% of the rated voltage over complete range of load from no load to full load and for specified input supply voltage variation. Voltage stabilizer in stabilized bypass supply shall be static type, unless otherwise specified.

The stabilized bypass supply shall have a continuous current rating equivalent to the rated output of the Online AC UPS unit and be capable of conducting a current ten times the rated output for the duration more than the fault clearing time of the type of fuse provided. The load transfer devices shall comprise of continuously rated static elements in both inverter and stabilized bypass supply.

Adequately rated static switches in required number & configuration shall be provided in the inverter(s) output and stabilized bypass supply to ensure positive isolation of faulty inverter section such that the other inverter and bypass circuits do not feed into the fault leading to under voltage / trip. The short time rating of all the static switches shall be at least 10 times the rated output for the duration more than the fault clearing time of the type of fuse provided.

Facility shall be provided to manually and automatically initiate transfer of the load from inverters to the stabilized bypass supply and from stabilized bypass supply to the inverters. Under voltage and over voltage sensing levels to initiate transfer shall be adjustable. The maximum transfer time between inverters and bypass supply shall not exceed 4 msec and 20 msec in synchronous and asynchronous mode respectively.

The criteria for load transfer:

a) Load transfer from inverter to the stabilized by pass supply shall be as follows:

i) The load transfer shall only be possible when:

- The stabilized bypass output voltage is within, ±5%of rated Online ACUPS output voltage and
- The mains bypass frequency is within ±3%.

ii) Auto-transfer of the load from inverter to stabilized by pass supply shall be initiated when:

- the inverter output voltage drops below 95% of nominal output voltage under steady state condition and/or if the inverter output voltage falls below 90% of the nominal value under transient conditions.

OR

- The inverter output voltage exceeds 105% of the nominal output voltage under steady state condition and/or if the inverter output voltage reaches 110% of the nominal value under transient conditions.

OR

- The inverter output current exceeds it's tolerable limits.

b) Re transfer of load from stabilized by pass supply to the inverter shall be as follows:

i) The load transfer shall be possible when-

- The inverter output voltage is within ±5% of nominal output voltage for more than 5sec. and
- Inverter output and stabilized bypass supply are synchronized

Retransfer of load from stabilized by pass to the inverter shall be done manually only unless otherwise specified in the data sheet.

@MECON Limited; all rights reserves

If automatic retransfer of load to the inverter is specified in the data sheet, then the retransfer of load to the inventor shall be inhibited following four automatic transfers of load to stabilize by pass within a period of 5 minutes.

All breakers shall be adequately rated for continuous rating as well as breaking capacity as applicable. Paralleling of breaker/ switch/ contactor poles to achieve the required current rating is not acceptable. All output isolating device shall be double pole type.

All electronic power devices including thyristors, transistors (IGBTs), diodes etc. shall be rated under operating conditions for approximately 200% of the maximum current carried by the device. All other electrical components such as transformers, reactors, breakers, contactors, switches, busbars etc. shall be rated for at least 125% of the maximum required rating. No electronic device shall be subjected to PIV greater than 50% of its rated value.

All the thyristors, power transistors, diodes and other electronic devices of Online AC UPS shall be protected with high-speed semiconductor fuses. I^2t co-ordination between fuse and semi- conducting power devices shall been sured.

The outgoing circuits of ACDB shall be protected by semiconductor fuses. Each inverter shall be designed to clear a fault in any of the branch circuits upto a maximum rating of 25% of the system capacity without the assistance of the stabilized bypass supply. In case of any fault in branch circuits, the load connected to the healthy circuits shall not get affected. The fault clearing time shall be less than 4msec.

All PCBs shall be provided with a transparent epoxy coating for environmental protection and topicalization. They shall be suitably located away from heat sources.

All electronic control and monitoring printed circuit cards shall be installed in standardized electronic equipment frames and shall be fitted with suitable means for easy removal. The frames shall incorporate guides for PCB's to facilitate correct insertion of PCB's and shall allow access to the wiring side of the connectors All PCBs shall be placed in a manner to avoid replacement of a PCB by a wrong spare PCB. Monitoring points shall be provided on each of the PCB's and the PCB shall be firmly clamped in position so that vibration or long usage do not result in loose contacts. Failure of each PCB shall be indicated by visual alarms. Visual fault diagnostics shall preferably identify faults upto various sections in the card.

Forced ventilation of panel, if provided, shall be supplemented by 100% redundant fans. In normal operation, normal & redundant fans shall run together. The power supply for the fans shall be tapped from the inverter output. However, the rating of the Online AC UPS as specified in the data sheet shall be the net output of Online AC UPS after deducting power consumption for fans etc. However, in case of non-operation of 50% of running fans the Online AC UPS output shall not be affected. The fans shall be arranged to facilitate removal of faulty fan for maintenance without requiring system shutdown. All fans shall be equipped with monitoring facilities to provide an alarm in the event off an failure.

Maximum noise level from Online AC UPS system at 1 metre distance under rated load with all normal cooling fans shall not exceed 75dBA.

@MECON Limited; all rights reserves

MECON LTD Delhi

6.00 Construction

Rectifier/charger and inverter, stabilized bypass supply and static switch sections shall be suitably housed in sheet steel panels complete with all interconnections.

Online AC UPS panels, ACDB and cell booster enclosures shall be fabricated from structural/CRCA sheet steel. The frames shall be fabricated by using minimum 2mm thick. CRCA sheet steel while the doors and covers shall be made from 1.6mm thick CRCA sheet steel. Wherever required suitable stiffeners shall be provided.

The panels shall be free standing, fitted with suitable louvres for ventilation and cooling fans as required. Hinged doors shall be provided at the front and back with dust tight gaskets. Interpanel sheet steel barriers shall be provided. The enclosure shall provide minimum IP-31 degree of protection, if not specified otherwise in the data sheet. The maximum and minimum operating height of the switches shall be 1800 mm and 300 mm respectively.

Power cables shall be with aluminum / copper conductors and control cables shall be with copper conductors. All the cable connections shall be from bottom and front of the panel, if not specified otherwise in the data sheet. A removable bolted gland plate shall be provided along with single compression type nickel plated brass cable glands for external cable connections. Clamp type terminals shall be used for connection of all wires upto 10 mm^2. Bolted type terminals suitable for cable lugs shall be provided for wire size above this. Tinned copper lugs for all external connections provided with the panels. Terminals for all external connections shall be provided. Interconnections cables for cubicles located side to side shall be supplied.

Bus bars shall be used in all power circuits which are rated above 100 Amp. Copper conductor PVC insulated cables or wires of 660V grade shall be used for power circuits rated less than 100

Amp. Bus bars shall be colour coded and live parts shall be shrouded to ensure complete safety to personnel intending routine inspection by opening the panel doors. All wires shall be ferruled and terminals shall be numbered.

MCCBs, MCBs and load break power switches shall be mounted inside the panel. The control switches shall be rotary type, mounted on the door and shall be externally operable. An 8W LED lamp controlled through a door switch shall be provided for illumination in each panel. All instruments shall be analogue/digital, switchboard type, back connected, 72 x 72 mm. square (Analogue type). Analogue instruments' scale shall have red mark indicating maximum permissible operating rating. Separate test terminals shall be provided for measuring and testing of the equipment to check the performance. The status contacts of MCCBs, MCBs and SFUs, fuse failure shall be wired upto a common TB for purchaser's use

A suitably sized earth bus shall be provided at the bottom of the panels including ACDB running through the panels line up with provision for earth connection at both ends to purchaser's main earth grid. The minimum size of earth bus shall be 25 x 3 mm^2copper (or equivalent aluminium). All potential free metallic parts of various equipment shall be earthed suitably to ensure safety.

All panels shall be of same height so as to form a panel line up which shall have good aesthetic appearance.

@MECON Limited; all rights reserves

Inside the panels, the controls connections shall be done with 660V grade PVC insulated wires having stranded copper conductors. 1.5 mm^2 size wire shall normally be used for circuits with control fuse rating of 10 Amp. or less. For control circuit having fuse of 16 Amps, 2.5 mm^2 size wire shall be used, Control wiring for electronic circuits shall be through flat ribbon cable or through copper wire minimum of 0.5 mm dia.

All control wiring shall preferably be enclosed in plastic channels or otherwise neatly bunched together. Each wire shall be identified at both ends by PVC ferrules. Ferruling of wires shall be as per relevant IS.

All metal surfaces shall be thoroughly cleaned and de-greased to remove mill scale, rust, grease and dirt. Fabricated structures shall be pickled and then rinsed to remove any trace of acid. The under- surface shall be prepared by applying a coat of phosphate paint and a coat of yellow zinc chromate primer. The under-surface shall be made free from all imperfections before undertaking the finished coat.

After preparation of the under-surface, the panels shall be spray painted with two coats of epoxy- based final paint or shall be powder-coated. Spray painted finished panels shall be dried in stoving ovens in a dust-free atmosphere. Panel finish shall be free from imperfections like pinholes, orange peels, runoff paint, etc. Colour of final paint shall be shade RAL7035, unless specified in the data sheet. All unpainted steel parts shall be cadmium plated or suitably treated to prevent rust corrosion.

All components / devices / feeders shall be provided with screwed nameplates and device tag numbers as per the schematic diagram. Nameplates shall be 3 ply white-black-white 2 colour laminated plastic type. Lettering shall be of minimum 6 mm height and edges shall be bevelled at 45°.

The status contacts of MCCBs, MCBs and SFUs, fuse failure shall be wired upto a common TB for purchaser's use. Marshalling Cubicle in each DCDB/ACDB for further integration with station PLC on hardwire

Cell Booster

Cell booster shall be suitable for charging one to six cells within time duration as specified. It shall be suitable for charging not only the new cells before being introduced to the battery bank but also any treatment to be given to the individual weak cells. Quantity of such boosters shall be as defined in the FOA/PO. Cell booster shall be suitable for 240V ± 10%, 50 Hz ± 3% SPN input power supply. Cell booster output voltage shall be in the range of 0 -18V and 0 - 12V for Lead Acid and Nickel Cadmium batteries respectively. Cell booster shall be sized as under:

For Lead Acid battery=0.14xAh of cell(10hr.Ratingofthecell) For VRLA

battery=0.2xAhofcell(10hr.Ratingofthecell)

For Ni-Cd battery = 0.2 x Ah of cell (5 hr. Rating of the cell)

Cell booster shall have heavy duty switch fuse or MCCB on AC incomer and DC output, AC voltmeter, DC ammeter and voltmeter, indicating lamp for AC / DC power ON. The output voltage and current of cell booster shall have manual control using a suitably rated variac or a full wave-controlled rectifier bridge.

@MECON Limited; all rights reserves

Suitable interlock shall be provided so as to ensure that the variac/ controlled rectifier/charger is at its minimum position while switching on the cell booster. Cell booster shall be portable type with wheels. Each cell booster shall be supplied with 5 m long flexible copper conductor, PVC insulated and braided cable for AC incomer power supply and DC output connection to the battery.

AC Distribution Board

Sheet steel enclosed AC distribution board shall be provided as part of the complete Online AC UPS system. It shall accommodate AC feeders as indicated in the data sheet. The distribution board shall be floor mounted, fixed type with compartmentalized construction unless otherwise indicated in the data sheet. It shall be possible to operate the switches without opening the doors. Switches shall be provided with door interlock. Vertical cable alley of minimum 200mm width with suitable supports shall be provided for the termination of outgoing cables. Suitable supports shall be provided for supporting incoming and outgoing cables. All outgoing switches shall be air insulated load break type. Fuses on outgoing feeders shall be fast acting semiconductor type and cable entry shall be from bottom. The gland plates of the distribution board shall be removable, CRCA or non-magnetic having minimum 3mm thickness. Non- magnetic cable gland plates shall be provided for termination of single core cables only. Surge suppression devices shall be provided in all outgoing feeders of Online AC UPSACDB.

7.00 ALARM, CONTROL, INDICATION AND METERING REQUIREMENTS

If not specified otherwise in the data sheet, following schedule shall be followed for alarm, control, indication and annunciation. Any additional devices/features considered necessary for reliable operation and maintenance shall also be included in various panels and same shall be highlighted separately. An illuminated one-line diagram indicating operational status shall be provided on the front of the panel. Metering, indications, audio-visual alarm shall be provided.

Parameters/ information indicated shall be available in LCD panel or by other means directly or indirectly. All the indicating meters on the panel shall be digital type.

Metering- Multi Function Meter with Modbus TCP IP

Backup time left based on current discharge rate

Rectifier/charger

a) Incoming line voltages (For all the three phases).
b) Input line currents (For all the three phases)
c) D.C. voltage at each rectifier/charger output.
d) Battery Bank current.
e) Battery Bank Voltage.

Inverters

a) AC voltage at each inverter output (ACvoltagesfor1 phase and 3phaseinverter))
b) AC current at each inverter output (ACcurrentsfor1 phase and 3phaseinverter)
c) Frequency meter at each inverter output

Stabilized bypass supply

@MECON Limited; all rights reserves

a) Frequency meter for incoming supply.
b) Voltmeter with selector switch for incoming supply.
c) Ammeter with selector switch for incoming supply.

ACDB
Following shall be provided for each of the ACDB incomers

a) Voltmeter (voltmeter selector switch shall also be provided for 3phase inverter).
b) Ammeter (ammeter selector switch shall also be provided for 3phase inverter).
c) Power factor meter.

Indications

(All indication lamps shall be provided with series resistors. Clustered/Jumbo LED's of minimum 10 mm dia. may be provided in place of lamps subject to their having at least equal illuminance.)

a) AC mains 'ON' -rectifier/charger.
b) AC mains 'ON' - Bypass.
c) Indication lamp for 3 phase Voltage (R Y B respectively)

Rectifier/chargers (for each rectifier/charger)

a) Rectifier/charger output 'ON'
b) Battery on float charge
c) Battery on rapid charge

Inverters (for each inverter)

a) DC input '0N'
b) Load on inverter.
c) Inverter synchronized with mains.

Load on bypass.

Audio-Visual Alarm (separately for each circuit)

a) Mains failure
b) Rectifier/charger failure
c) Battery fault
d) Inverter temperature high
e) Low voltage from inverter
f) Load on bypass
g) Inverter overloaded
h) All power Fuse failures
i) DC earth fault
j) backup left less than suitable time (say 10 minutes) shall be included in audio visual alarms.

For interfacing with Station PLC on hard wired 2nos.changeover contacts shall be wired to the terminal strip, 1no.for common remote alarm of 'Online AC UPS fault' in Purchaser 's panel and 1 no for 'load on bypass supply' annunciation.

@MECON Limited; all rights reserves

MECON LTD, Delhi

UPS shall be provided with provision to hook up all indications and audio-visual alarms, as specified above with purchaser PLC and RTU through Modbus TCP/IP.

Redundant communication (Two Different IP Domain) with Station PLC/SCADA RTU to be provided as applicable

Controls

a) All the switches for starting, shut down and testing sequence.
b) Primary input circuit breakers for feeding rectifier/chargers, bypass line and dc bus from battery including backup protection.
c) Inverter ON/OFF switch (to initiate inverter operation)
d) Static switch transfer test Push Button

Reliability

All necessary care shall be taken in selection, design, manufacture and testing of the equipment for ensuring high system reliability. Following design consideration shall be taken into account to ensure maximum availability of the system.

There shall be no common device, between main and redundant units (e.g. master oscillators etc.) in order to ensure that the failure of the same does not cause shutdown of more than one unit.

It shall be possible to take out any individual power circuit for maintenance without affecting the total Online AC UPS supply.

Series- parallel combination of smaller devices to achieve required rating shall not be acceptable.

Vendors shall offer their nearest higher standard size that will meet the requirement of the specified Online AC UPS rating.

System Manage Module /Fault Diagnostic Unit

When specified in the data sheet, each Online AC UPS set shall have microprocessor-based system manage module with Modbus TCP/IP communication and shall have capability to communicate with Purchaser's PLC and RTU On redundant link (two different IP domains). It shall also have capability to provide the status of all analog & digital parameters of the Online AC UPS system. This shall supervise the Online AC UPS operation continuously. It shall identify and locate faults immediately so that corrective action can be taken. System manage module shall be compatible to hook up with Purchaser's PC through RS485 interface. The necessary hardware and software shall be provided on a Hard Disc/CDROM.

The System Manage module shall have provision for monitoring input/output voltages, currents, frequency as a minimum under the following conditions.

- Online AC UPS power source changeover from mains to battery.
- Online AC UPS power source changeover from battery to mains.
- Change over from inverter to stabilized by pass supply and vice versa.
- Changeover from one inverter to another inverter.

@MECON Limited; all rights reserves

MECON LTD Delhi

- Changeover time in case of inverter to stabilized bypass supply and from one inverter to another inverter.
- Online AC UP failure.
- Type of failure incident along with diagnostic report.

In addition to the above, any other feature which vendor feels may be useful shall be provided and highlighted separately.

If any additional equipment is required for connecting this unit with Online AC UPS system as

well as Purchaser's PC, the same are also to be included in the vendor's scope.

MODBUS TCP/IP ports shall be daisy looped for interfacing with station PLC and RTU for fetching all the parameters/diagnostics in an elaborate way. If any of the parameter scan not be communicated over the said protocol then vendor shall provide transducers.

8.00 INSPECTION AND TESTING

During fabrication, the equipment shall be subjected to inspection by Purchaser or by an agency authorized by the Purchaser. Vendor shall furnish all necessary information concerning the supply to Purchaser. The Purchaser shall have free access to the Vendor's works for the purpose of inspecting the process of manufacture in all its stages and he will have the power to reject any material, which appears to him to be of unsuitable description or of unsatisfactory quality.

Online AC UPS system shall be tested in accordance with applicable standards. Following acceptance tests on each Online AC UPS system as a minimum shall be carried out at Vendor's works under his care and expense. Vendor's internal test reports shall be provided for Purchaser's review prior to inspection and testing. All tests shall be witnessed by purchaser or its authorised representative and 4 weeks prior notice shall be given before the date of commencement of tests. The tests certificates indicating test results shall be furnished. Following system acceptance tests shall be conducted on each UPS system.

Insulation tests

Insulation tests shall be performed as per IEC 60146-1-1.

The insulation tests shall be carried out using an AC power frequency voltage or by using DC Voltage at the choice of the vendor. In the case of AC power frequency voltage test, the test voltage at the frequency available in the test facility or at the rated frequency, but not exceeding 100 Hz, of the full value starting at a maximum of 0.5 p.u. The unit on test shall withstand the specified voltage for 1 minute.

In case DC voltage is used for the test, the value of DC voltage shall be equal to the crest value of the test voltage specified in the table.

Vp / √ 2 (Vp is the highest crest voltage to be expected between any pair of terminals)	Test Voltage (AC rms value)
≤ 60 V	500 V

@MECON Limited; all rights reserves

≤125 V	1000 V
≤ 250 V	1500 V
≤ 500 V	2000 V

Interconnection cable check

The interconnection cable are to be checked for correct wiring, insulation and quality of the terminations

A.C. input failure test

The test is performed with the test battery and carried out by tripping a.c. incoming circuit breakers or by switching off rectifier/chargers and bypass supply at the same time. Output voltage and frequency variations are to be checked for specified limits.

A.C. input return test

The test is performed by closing a.c. incoming circuit breakers or is simulated by energizing rectifier/chargers and bypass supply. Proper operation of rectifier/chargers starting and voltage and frequency variations of output are to be checked.

Simulation of parallel redundant Online ACUPS fault

The test is applicable for Online AC UPS with parallel redundant configuration. Fault of rectifier/charger or inverter are to be simulated and output transients are to be recorded.

Transfer test

Transients shall be measured during load transfer from inverter to bypass supply caused by simulated fault and load retransfer after clearing the fault.

Regulation test

This test shall be carried out by measuring input voltage, input current, output voltage, output current, DC link voltage, output distortion, input active power, output active power and frequency at no load, 50% load and 100% load at 0.7 and 0.8p.f.

Following parameters of rectifier/chargers and inverters are to measured:

Measurement shall be carried out in the rectifier/charger float charge mode and in rapid charge mode. Measurement shall be at nominal a.c. voltage and at no load, 50% load and 100% of rectifier/charger full load.

Rectifier/charger measurement shall comprise of: -

- Input voltage, frequency, phase current and input power.
- D.C. output voltage and current.
- Ripple current at the DC'link bus shall be recorded after isolating the test battery.

Inverter measurement shall also be at no load. 50% load and 100% load of inverter rated output current and

@MECON Limited; all rights reserves

shall be repeated for inverter D.C. input voltages corresponding to battery float charge operation as well as rated inverter maximum and minimum input D.C. voltage. Measurement shall comprise of:

- Input voltage, input current.
- Output voltage, frequency and wave form distortion, output power and current.

Online AC UP efficiency

This shall be determined by the measurement of the active power input and output at rated p.f. for 50%, 75% and 100% load.

Current division in parallel Online ACUPS

Load sharing between Online AC UPS units shall be measured with a dummy load under parallel redundant Online AC UPS configuration.

Light load test

The test is to verify that all functions of the Online AC UPS system operate properly. The load applied is limited to some percentage of rated loads. The following points are to be checked.

a) Output voltage and frequency and correct operation of meters.
b) Operation of all control switches and other means to put Online ACUPS system into operation.
c) Functioning of protective and warning devices

Burn-in test for Printed circuit boards

PCB's and other electronic components sub-assemblies shall undergo a burn – in test for 96 hours at 50 °C at a voltage varied between the maximum and minimum supply voltage. In case of failure of any component during testing. The tests shall be repeated after replacement of the faulty component. Supplier's test certificates are also acceptable for this test.

Continuous full load test at 0.8 power factor with temperature rise measurement

The test is required to be performed by connecting resistive load or resistive and inductive load to the Online AC UPS system output. The load shall be placed outside the test room to avoid influences of its heat upon Online AC UPS ventilation. Online AC UPS system in this test shall undergo a complete full load test for 32 hours at 0.8 power factor. Out of these 32 hours, each inverter section shall be subjected to full load test for 8 hours, both inverters sections operating in parallel shall be subjected to full load test for 8 hours and the for remaining 8 hours; the bypass section shall be subjected to full load test. Steady state temperature of rectifier/charger transformer, rectifier/charger set, D.C. choke, inverter set, static switch etc. shall be recorded during the test. The temperature of all Online AC UPS panels is also to be recorded.

Auxiliary equipment and control circuit tests

The correct functioning of all measuring instruments, alarms, indications, protection devices and controls are to be verified. The functioning of auxiliary devices such as lighting, cooling fans, annunciation etc. should be checked.

Synchronization test

Frequency variation limits of inverter are to be tested by feeding bypass supply incoming line by variable

@MECON Limited; all rights reserves

frequency generator and inverter synchronization limit is to be checked as specified.

Unbalanced load test (For3phaseOnlineACUPSonly)

Unbalance load at specified limits is applied to the Online AC UPS system. The specified voltage and phase angle variation may be checked for compliance with specified values.

Output voltage unbalance (For3phaseOnlineACUPSonly)

Output voltage unbalance shall be checked under symmetrical load conditions and unbalance load conditions. Phase to phase and phase to neutral output voltage are to be observed. The voltage unbalance is the ratio of highest phase voltage minus lowest phase voltage to the average value. Phase angle variation may be measured for phase to phase and phase to neutral voltages

Overload capability test

Specified values of short time overload are to be applied for specified time interval. Values of Output voltage and output current are to be recorded.

Short circuit current capability test

Specified short circuit current capability is to be tested by application of a short circuit to Online AC UPS output if necessary, via a suitable fuse. Short circuit current is to be recorded.

Short circuit fuse test

Fuse tripping capability of the Online AC UPS system is to be tested by short circuiting the Online AC UPS system output via a specified rating of fuse. The test is carried out at an appropriate Online AC UPS load under normal operation.

Restart

Manual restart to be tested after complete shutdown of Online AC UPS system.

Output overvoltage

Operation of output over voltage protection is to be checked.

Dynamic Response test

Output recording at different loads and operating condition to be done.

Harmonic components

Harmonic components of output voltage are to be recorded at no load, 50% load and 100% load conditions. Harmonic voltages caused by Online AC UPS system components in the A.C. incomer side shall be recorded at site.

Earth fault test

An earth fault is to be applied to the output terminal of Online AC UPS system. Online AC UPS output transients are to be measured. An earth fault is also to be applied to the battery terminal and Online AC UPS system output transient shall be measured.

Audible noise test

The audible noise is required to be measured at 1 meter distance from Online AC UPS system in at least 4

@MECON Limited; all rights reserves

to 5 locations and its value shall be within permissible limit.

Batteries shall be tested in accordance with applicable standards. Following acceptance tests on each AH rating of cells/battery shall be carried out at Vendor's works under his care and expense. Vendor's internal test reports shall be provided for Purchaser's review prior to inspection and testing. For long duration type tests, type test certificates of identical Ampere hour rating shall be furnished

a) Physical examination
b) Polarity and absence of short-circuit
c) Marking and packing
d) Verification of dimensions
e) Air pressure test
f) Test for voltages during discharge
g) Test for AH capacity
h) Test for charge retention if specified in the datasheet.
i) Insulation resistance

Battery duty cycle test to meet the load cycle requirement shall also be performed at site after installation as part of commissioning unless otherwise defined in the datasheet.

Acceptance, routine and type tests shall be witnessed by Purchaser or an agency authorized by the Purchaser. Prior notice of minimum 4 weeks shall be given to the Purchaser for witnessing the tests.

For equipment bought from other sub-suppliers, certified test reports of tests carried out at the sub-supplier's works shall be submitted. Normally all routine tests as specified in the relevant standards shall be conducted by the sub-supplier at his works.

9.00 SITE ACCEPTANCETESTS

Vendor shall furnish Site Acceptance Tests procedure to be followed. Final acceptance testing along with the batteries shall be done at site. It shall be Vendor's responsibility to arrange necessary instruments and tools as required by their commissioning engineer for these tests.

10.00 PACKING ANDDISPATCH

All the equipment shall be divided in to several shipping sections for protection and ease of handling during transportation The equipment shall be properly packed for transportation by ship/rail or trailer. The equipment shall be wrapped in polyethylene sheets before being placed in wooden crates /cases to prevent damage to the finish. Crates /cases shall have skid bottoms for handling. special notations such as Fragile', This side up', ' centre of gravity', 'weight', ' Purchaser's particulars', 'PO nos.' etc. shall be clearly marked on the package together with other details as per purchase order.

The equipment may be stored outdoors for long periods before installation. The packing should be suitable for outdoor storage in areas with heavy rains and high ambient temperature unless otherwise agreed.

****

@MECON Limited; all rights reserves

MECON LTD. Delhi

Rev: 03
Edition: 1

SPECIFICATION FOR

UN-INTERRUPTED POWER SUPPLY (UPS) SYSTEM

SPECIFICATION NO. MEC/TS/05/E9/071

(OIL & GAS SBU)
MECON LIMITED
DELHI 110 092

CONTENTS

SL. NO.	DESCRIPTION
1.0	SCOPE
2.0	STANDARDS
3.0	GENERAL REQUIREMENTS
4.0	DRAWING AND DOCUMENTS
5.0	INSPECTION

ANNEXURE -I PURCHASER'S DATA FOR UPS
ANNEXURE -II TECHNICAL DATA FROM MANUFACTURER
ANNEXURE -III CHECK LIST
ANNEXURE – IV LIST OF TWO YEAR OPERATION & MAINTENANCE SPARES

AMENDMENT STATUS

Sl. No.	Clause / Paragraph / Annexure / Exhibit / Drawing Amended	Page No.	Revision	Date	By (Name)	Verified (Name)
1	Clause mp. 3.4	2	1	28.01.11	SS	Saurabh
2	Clause mp. 3.4.4	4	1	28.01.11	SS	Saurabh
3	IGBT rectifier included	-	1	Oct'15	AM	MKJ
4	Revised	-	2	June'18	AM/SJ	MKJ
5	Revised for CGD Project	-	3	Nov.2022	SB/SJ	QA

1.0 SCOPE

The intent of this specification is to define the requirements of uninterrupted power supply system, Rectifiers, Inverter system and the associated battery sets. Tenderer's scope of work includes design, manufacture, testing, packing and delivery to site and testing & commissioning of the complete UPS system with static by-pass, solid state voltage stabilizer for by-pass supply, distribution boards and battery banks etc. as per this specification, data sheet.

2.0 STANDARDS

2.1 In general the equipment covered by this specification shall, unless otherwise specified, be in line with the requirement of any of the latest applicable standards of

a) Bureau of Indian Standards
b) British Standard Institution
c) American Standard Institution
d) International Electro Technical Commission

2.2 Wherever the requirements in this specification are in conflict with any of the above Standards, the requirements under this specification shall be binding.

2.2 In case any contradiction between various referred standards/specification/data sheets and statutory regulation etc, following order of priority shall be applicable for any contradiction-

i) Statutory regulations
ii) Schedule of rate
iii) Scope of Work
iv) Data Sheet
v) Standard specification
vi) Codes & standard

3.0 GENERAL REQUIREMENTS

3.1 ENVIRONMENTAL CONDITIONS

The uninterruptible power supplies shall be designed and constructed for continuous operation at full load under the climatic and environmental conditions as described in the specification / Purchaser Data". The UPS shall be installed in Electrical/Control room buildings and shall be designed for non air-conditioning ambient.

3.2 COMPONENTS AND EQUIPMENT

a) The Contractor has to take care that all the components and equipments are selected considering easy maintenance, simple and quick diagnosis and long maintenance intervals. All the components and equipments shall be designed for continuous duty at rated load and

under the given climatic conditions. Standard industrial high performance systems and components shall be used as far as possible. Components and equipment of same kind and type shall be selected for equivalent functions. The interchangeability must be guaranteed.

b) UPS shall be free from workmanship defects, sharp edges, nicks, scratches, burs etc. All fasteners shall be fixed properly. The equipment shall be complete with all parts and all parts shall be functional.

3.3 TAGGING

All components, equipment and installations shall receive the respective tagging plates, labels, etc., which have to be of extremely durable material resistant against the environmental conditions. Tagging plates or labels on fronts of enclosures shall be fixed with screws. For further requirements, reference is made to specification. All wiring inside the UPS shall be neatly arranged & ferruled.

3.4 BASIC PARTICULARS FOR DESIGN

- Suitable for industrial application.
- Microprocessor based online UPS.
- The rating of the system shall be as per Schedule of Rates at 0.8 pf lagging at ambient temperature specified in design basis / Scope of Work / Data sheet.
- 125% of the rated output for 10 minutes & 150% for 1 minute.
- Automatic selection of available phase (out of three phases) in incoming feeding power supply to the UPS, **as indicated in SOR/DATASHEET**.
- Input supply to UPS (3-Phase or 1-Phase) shall be as per DATASHEET/SOR.
- Inverter & rectifier switching device shall be IGBT based.
- Single-phase voltage and frequency controlled output.
- Suitable protection shall be provided in the control circuit to guard against instability of phase controlled rectifier due to electrical oscillation, which may be present in input supply as caused by emergency DG set.
- Single/ Dual/ Parallel redundant system with automatic static bypass, Battery bank and solid-state voltage stabilizer **as per data sheet, Schedule of rates and Std./Block diagram.**
- The load shall normally be fed from the inverter.
- Battery shall be suitable to maintain the power supply in the event of mains failure or battery charger failure for time period **as indicated in Schedule of Rates**.
- AC Distribution board as per data sheet.
- Panel illumination to be provided.
- Noise level at a distance of 1 mtr from UPS panels shall not exceed 65 DB.
- All wound elements shall be of copper wound.
- Input Current Total Harmonic Distortion (THD) shall not be greater than 5%.

3.4.1 PERMISSIBLE VARIATIONS

1) Mains power supply system:-

Voltage	:	+10% & -15% or as per SOR
Frequency	:	±5%

2) Output of the uninterrupted power supply system while delivering a load of its rated capacity:-

Voltage	:	±1%
Frequency	:	±0.1%

3.4.2 PROTECTIVE FEATURES & INDICATIONS & ALARMS

PROTECTIVE FEATURES

a) Input-

- Mains Over voltage, under voltage, phase failure

b) Inverter-

- Over voltage, short circuit, overload, over heat, over temperature

c) Battery-

- Under voltage at battery terminal, Battery over charge, Battery Over current

d) Rectifier & Battery charger-

- DC Earth Fault

INDICATIONS AND LCD DISPLAY

Following indication should be provided. Single line Power Flow Diagram

(i) Digital panel Meter with LCD display (touch screen / touch pad) shall be provided for monitoring viz.

a) Input AC Voltage, current, frequency
b) Output AC Voltage, current, frequency.
c) Battery current and voltage
d) Mains ON/OFF/TRIP, Mains Over/Under voltage, Phase fail
e) Inverter ON/OFF, Inverter Over/Under voltage, inverter overload, over heat & load in % on inverter.

f) Battery voltage low, battery level in %.
g) Battery Operation Boost Charge, Float Charge with of status - "in charge" or "discharge"

AUDIBLE ALARMS WITH LCD DISPLAY-

a) Mains Failure
b) Battery Low
c) UPS fault (Continuous)
d) Inverter Under-voltage
e) Over Temperature (Continuous)
f) Inverter Overload (Continuous)

3.4.3 TRANSFORMER (ISOLATION TRANSFORMER FOR OUTPUT):

1. Rating suitable for the application & as per IEC726/IS-11171
2. Dry type, with class 'F' insulation
3. Isolation transformer for output – Required **(As per block diagram).**

3.4.4 RECTIFIER/ BATTERY CHARGER

1. Switched ON through a **MCCB.**
2. Charger size shall be based on the inverter input load current and battery recharging current. The rating of rectifier / charger sha ll not be less than the value calculated as follows:

   The rating of rectifier / charger current (Ic) shall be not less than the value calculated as follows:

   For SMF LA/VRLA batteries= Inverter input current (Idc-Inverter) + 0.2 Ah (5 hr. rating of battery)

Where

$$\textbf{Inverter input current}\ (\text{Idc-Battery}) = \frac{\text{Rated kVA capacity of UPS X load p.f}}{\text{Inverter eff. x (No. of Cells x End Cell voltage)}}$$

(For Battery Sizing)

$$\textbf{Inverter input current}\ (\text{Idc-Inverter}) = \frac{\text{Rated kVA capacity of UPS X load p.f. x1.1 (overload factor)}}{\text{Inverter eff. x (No. of Cells x Float voltage)}}$$

$$\textbf{Charger Sizing} = \frac{\text{Charger Current (Ic)X Charger Voltage (No. of Cells x Float Voltage of Cell)}}{\text{Rectifier eff.}}$$

(Rating in Watt)

3. Transient and surge protection circuit in i nput circuit to protect UPS from surges and voltage Spikes.

4. Necessary smoothing reactor and filters.

5. Automatic boost and float charging control

6. Protective features:

- Maximum current limiting
- Over temp. Trip
- Boost charging and float charging curre nt limiting with back up protection against over charging.

7. Charger shall simultaneously supply entire power necessary for inverter (load) and to keep the battery of required capacity in fully charged condition. Provision for autom atic charging in both float and boost shall be made.

3.4.5 INVERTER (IGBT Technology Based)

1. Input circuit consisting of battery MCCB, battery filter and smoothing reactor.
2. The circuit should be IGBT based fully microprocessor controlled with PW M Technology
3. Control electronics
4. Series reactor and parallel filter
5. Output transformer
6. Protection against the following:

- Abnormal output voltage
- Abnormal link voltage
- Over load trip
- Low battery voltage
- High transformer temperature
- Auxiliary supply failure

7. Static by-pass switch

- Manual bypass shall be provided & shall be operated manually by a switch which allows the electrical isolation of UPS from load for the purpose of maintenance of UPS.

3.4.6 Constructional Features

1. Unitized construction and shall be manufactured as per IEC:62040, IEC60950
2. Free standing, floor mounted, indoor type and complete with all interconnection.
3. Dust and vermin proof

4. Sheet steel clad

   - Min 2 mm thick for load bearing members & Min 1.6 m m thick for Non-load bearing member

5. Units shall be self contained and serviceable
6. The arrangement and layout shall facilitate easy and convenient supervision of the unit while running as well as quick detection of disturbances and troubleshooting.
7. AL earth bus bar (25x3 mm) shall run through out the length of Panels. All doors & non-current carrying metallic parts shall be suitably earthed.
8. Dimensions of panels shall be such that it can be accom modated in existing room **if indicated in MR/ SOR**.
9. The maximum and m inimum operating height of the switches shall be 1800m m and 300mm respectively.

3.4.7 Enclosure and Ventilation

- Enclosure conforming to minimum IP-31.
- Units shall be provided with cooling fans and louvers.

3.5 Battery unit

3.5.1 Ampere-hour capacity of the battery shall be selected on the following basis:

a) Load power factor of 0.8
b) Aging factor of 0.8
c) Battery state of charge factor of 0.88
d) Temperature correction factor shall be 0.95
e) Backup time as specified in SOR / data sheet
f) Minimum End Cell Voltage shall be 1.85 V per cell for SMF LA/VRLA battery.

Load break switch Fuse unit in sheet steel enclos ure shall be provided near the battery bank for isolation.

3.5.2 The type of battery (SMF LA/VRLA) shall be as per Material Requisition/ SOR.

3.5.3 Sets of Indoor Stationary batteries of type as per enclosed data sheet com plete with all required accessories as applicable including but not lim ited to the following shall be supplied with each battery set;

a) Battery stands in two row/ two tier form ation. Stand Material shall be as per battery manufacturer's standard.
b) Cell testing voltmeter complete with leads- (1 no. Per set).
c) Spanner - (1 no. Per set).

3.5.4 Overall dimensions of complete battery set shall be such that it can be accommodated in existing room **if indicated in data sheet.**

4.0 DRAWINGS AND DOCUMENTS

4.1 The following documents shall be submitted along with the offer:

a) List of two years operation and maintenance spare.
b) Technical data sheet (Annex-II) and check list duly filled.

4.2 The following calculations/ dimensions shall be submitted **along-with offer**:

a) Charger sizing calculation.
b) Battery sizing calculation.
c) Battery bank/stand size.
d) G.A of UPS panel.

4.3 The following drawings shall be submitted for approval within 3 weeks of award of contract.

a) G.A. of panel, battery stand, ACDB.
b) Bill of Material
c) Schematic & Wiring diagram for reference
d) Charger sizing calculation
e) Battery sizing calculation
f) Battery bank/stand size
g) UPS panel size.
h) UPS Control & Protection philosophy
i) List of LCD indication & audio alarms

4.4 Final drawings, operation & m aintenance manual and erection Instructions shall be subm itted along with despatch of equipments in four sets in hard copy & two sets in soft copy (CD).

5.0 INSPECTION

Inspection and testing of equipment shall be carried out by the owner/ consultant at the works of the contractor on final product to ensure conform ity of the sam e with the acceptable criteria of technical specification, approved drawings and national/ international standards.

5.1 The contractor shall subm it Quality Assurance Pl an (QAP) for respective equipments within 3 weeks of award of contract.

5.2 QAP shall be prepared and furnished by the cont ractor in MECON's QAP form at enclosed with tender along with their internal in process quality checks.

5.3 'Type test' including heat run test shall be conducted on one UPS System of each rating and 'Routine test' on the remaining.

5.4 Batteries shall be tested for type and `Acceptan ce Test'/ Routine Test at battery m anufacturer's

works and test reports shall be submitted for review and approval.

5.5 Final acceptance testing along with the batteries sh all be done at site. Site acceptance test procedure shall be submitted by the Contractor along with QAP.

-x-x-x-

REV: 0
EDITION: 3

TECHNICAL SPECIFICATION

FOR

HIGH MAST

DOCUMENT No. : MEC/05/E9/TS/12

Prepared & Issued by

ELECTRICAL SECTION
(Oil & Gas SBU)
MECON LIMITED
(A Govt. of India Undertaking)
13th& 15th Floor, North Tower, SCOPE MINAR,
Laxmi Nagar District Centre,
Delhi-110092 (India)

@MECON Limited; all rights reserves

MECON LTD, Delhi

INDEX

Sl. No.	Description	Page No
01.00	INTENT	4
02.00	CODES AND STANDARDS	4
03.00	GENERAL REQUIREMENTS	5
04.00	DESIGN AND CONSTRUCTION REQUIREMENTS	5
05.00	DRAWINGS AND DOCUMENTS	9
06.00	INSPECTION	9
07.00	PACKING AND DISPATCH	9

Rev	Date	Prepared by	Checked by	Approved by
0	11.07.2025	Saurabh Singh	Quasim Ahmed	Pankaj Shrivastava

© Copyright MECON Limited – All rights reserved.
THIS DOCUMENT IS THE SOLE PROPERTY OF MECON AND ISSUED FOR THE SPECIFIC PROJECT MENTIONED HEREIN. THIS IS NOT TO BE COPIED OR USED FOR ANY OTHER PROJECTS UNLESS EXPLICITLY PERMITTED BY MECON.

@MECON Limited; all rights reserves

MECON LTD, Delhi

AMENDMENT STATUS

(OLD NUMBER OF STANDARD: MEC/TS/05/E9/12)

Sl. No.	Clause / Paragraph / Annexure / Exhibit / Drawing Amended	Page No.	Revision	Date	By (Name)	Verified (Name)
1	Document Number replaced with New number as **MEC/05/E9/TS/12**	All	Rev 0/ Ed 3	11.07.2025		
2	Section re-name as Electrical Section (Oil & Gas SBU) Delhi	All	Rev 0/ Ed 3	11.07.2025		

MECON LTD, Delhi

@MECON Limited; all rights reserves

1.0 INTENT

The intent of this standard specification is to define the general requirements for design, manufacture, assembly and testing at manufacturer's works, packing, transportation and receipt at site with all materials and accessories of High Mast.

2.0 CODES AND STANDARDS

The work shall be carried out in the best workman like manner in conformity with this specification, the relevant specifications, codes of practice of Indian Standards Institution, approved drawings and instructions of Engineer-in-Charge or his authorized representative issued from time to time. In case of any conflict between the standards, the instruction of Engineer-in-Charge shall be binding.

The High mast shall comply in design, material, testing and performance according to relevant IS/IEC codes and standards. The latest revision of the publication referred to shall apply.

1. High mast Shaft – TR. No. - 7 – High Masts for Lighting and CCTV (2000 edition) of ILE, U.K, SABS 0225:1991
2. Wind Loading – IS 875 Part – 3, 1987.
3. High Tensile Steel Sheets – BS EN 10025:2004 grade S355 J0
4. Mild Steel – IS 2062
5. Galvanization – BS EN ISO 1461
6. Stainless steel Wire rope – IS 3459 / 2266
7. Trailing Cable – IS 9968 Part – 1
8. Motor – IS 325

The High mast & its accessories shall conform to the provisions of Indian Electricity Rules and other statutory regulations as applicable.

Wherever the requirements in this specification are in conflict with any of the above Standards, the requirements under this specification shall be binding.

In case of any contradiction between various referred standards/ specifications/ data sheet and statutory regulations the following order of priority shall govern. However, stringent of the below shall be followed

- Statutory regulations.
- Schedule of Rate
- Scope of Work/ Job specification.
- Design Basis.
- Data sheets.
- Standard Specification.
- Codes and standards.

@MECON Limited; all rights reserves

3.0 GENERAL REQUIREMENTS

The offered equipment shall be brand new with state of art technology and proven field track record.

Vendor shall ensure availability of spare parts and maintenance support services for the offered equipment for at least for 20 years from the date of supply.

Vendor shall give a notice for at least one year to the Purchaser of equipment before phasing out the product/spares to enable the Purchaser for placement of order for spares and services.

SITE CONDITIONS

The High Mast shall be suitable for installation and satisfactory operation in outdoor installation as specified in the data sheet with humid and corrosive atmosphere.

The High Mast shall be designed to operate under site conditions as specified in the data sheet. If not specifically mentioned therein, a design ambient temperature of 50°C for outdoor and an altitude not exceeding 1000metres above mean sea level shall be considered.

4.0 DESIGN AND CONSTRUCTION REQUIREMENTS

Construction

The mast shall be manufactured from mild steel plate, cut and folded to form continuously tapered min. 20 sided polygonal profile. Each mast section shall not have any circumferential welding joint.

Sections should be fitted together on site, telescopically, in a manner that does not require additional welding. Steel (BSEN 10025, Grade-S-355) confirming with BS-4360 shall be used for the construction of the mast and welding processes shall confirm to BS-5135 and mast shall be hot dip galvanized internally & externally confirming to BS-729 / IS-4759,1984. Thickness of each section shall be as per the design calculation however any section shall not be less than 4.0mm.

There shall be only one longitudinal seam weld per section. Sections with more than one weld, circumferential or longitudinal, shall not be accepted. At site the sections shall be joined together by slip-stressed-fit method. No site welding or bolted joint shall be done on the mast. The minimum overlap distance shall be 1.5 times the diameter at penetration. The minimum top diameter shall be 150 mm. Bottom diameter and plate thickness shall be as per the structural requirements. Detailed design calculation of the mast shall be submitted for verification.

For the environmental protection of the mast, the entire fabricated mast shall be hot dip galvanised, internally and externally, having a uniform average thickness of 85 microns for plates with more than 5 mm thickness and 70 microns for 5 mm and less. Galvanising shall be done in single dipping method for better adhesion and life.

The mast structure shall be designed for an assumed maximum reaction arising from the maximum

@MECON Limited; all rights reserves

wind speed (180 km per hour) and measured at a height of 10 mtrs above ground level. The design life of the mast shall be minimum 25 years. For design K1 shall be considered as 0.9 and K2 as terrain category 2 (1.07 for 20mtr and 1.12 for 30mtr) or as per the datasheet / site requirement, the more stringent shall be followed. Wind excited oscillation shall be damped by the method of constructions and adequate allowance made for the related stresses.

Base flange

The type of foundation for the proposed high mast shall conform to civil / structural scope of work / specifications.

The base flange shall be manufactured from steel plate free from laminations or incursions. The base shaft should penetrate the full depth of the base plate and should be welded both above and below. Gussets shall be located between each hole position, for additional strength.

Base compartment

An access opening of the base compartment with door provided and should be reinforced to maintain the strength of the mast. The opening shall be such as to permit clear access to equipment like winches, cable plug and socket, etc. The door should be weatherproof type with suitable locking arrangement.

The door opening shall be complete with a close fitting, vandal resistant, weatherproof door, provided with a heavy-duty double internal lock with special paddle key.

Size of door opening shall not be more than 1200 x 250 mm to avoid buckling of the mast section under heavy wind conditions.

Earthing terminal & earthing

Stainless Steel hexagonal head bolt, complete with saddle bracket should be located in readily accessible position in the base compartment to be used for earthing terminal. Proper double earthing shall be provided to the tower. Feeder pillar shall be independently double earthed.

Head frame

The head frame which is to be designed as a capping unit of the mast shall be of welded steel construction galvanised both internally and externally after assembly. The top pulley shall be of appropriate diameter, large enough to accommodate the stainless steel wire ropes and the multi-core electric cable. The pulley block shall be made of non-corrodable material, and shall be of die cast Aluminium Alloy (LM-6). Pulley made of synthetic materials such as Plastic or PVC is not acceptable. Self-lubricating bearings and stainless-steel shaft shall be provided to facilitate smooth and maintenance free operation for a long period. The pulley assembly shall be fully protected by a canopy galvanised internally and externally.

Close fitting guides and sleeves shall be provided to ensure that the ropes and cables do not dislodged from their respective positions in the grooves. The head frame shall be provided with guides and stops with PVC buffer for docking the lantern carriage.

@MECON Limited; all rights reserves

The whole head frame assembly shall be covered to the frame by stainless steel bolts.

Lantern Carriage

Fabrication
The lantern carriage shall be of double ring and of mild steel construction and shall be hot dip galvanized after assembly. The carriage shall be in the form of a double ring split on one diameter or in two halves and joined by bolt flanges with standard steel bolt enabling it to be assembled or removed from the shaft after erection. The inner lining of the carriage shall be provided with protective PVC arrangement, so that no damage is caused to the surface of the mast during the raising and lowering operation of the carriage

Junction Box
Junction boxes suitably located and housing connections to the lantern shall be provided to meet the design requirement to feed the lightings. The junction box shall also have provision for connection of the flexible mast electric cable. The junction box shall be constructed so as to insure complete protection against weather.

The aviation light fittings will also be fed through the junction box.

Wiring duct
Suitable wiring duct shall be provided which should carry electric wiring to the light fittings.

Electric cables
High mast shall be provided with flexible, multi core, copper conductor power cable. The cable shall be suitably sized to ensure proper flow of current with voltage drop within permissible limit (described elsewhere in the tender document).

Electrical disconnect
An electrical disconnect shall be provided at the base of the mast, comprising socket with coupling ring and threaded plug. High mast for hazardous location shall have flame proof male-female socket. It shall be possible that for lowering the lantern cartridge, the electrical cable is disconnected at the base and connected to the test lead so that it is free to travel within the mast and power supply can be maintained.

Winches
The mast shall be provided with double drum winch. The winch shall be capable of handing maximum anticipated load with sufficient safety margin. Suitable reduction gear box shall be provided which shall be filled with lubricant in the factory and should required no further attention at site. The gears shall be suitable reduction ratio and provision shall be made both for manual as well as power drive.

The drum shall be fabricated from steel. To ensure correct rope stacking, a minimum of one full layer

@MECON Limited; all rights reserves

of rope shall remain on the drum, after the lantern carriage has been lowered to its lowest position. The double drum winch shall use an arrangement of two independent ropes and each rope shall have one end attached to the lantern carriage and the other end clamped to the winch drum. The control arrangement shall allow the two sets of gears and shafts for normal operating duty of raising and lowering. Additionally, a separate manual only function shall permit the lower drum to be rotated independently for leveling the lantern on both gear shafts and automatic gravity latches, which separately lock each drive shaft.

Stainless steel wire rope

All wire ropes shall be made form stainless steel confirming to IS-2365, 1963 & IS-3457, 1977 having a tensile strength of 165 Kgf / mm. The rope shall have a construction of 7/19 of steel core, to combine corrosion resistance with flexibility. The rope of 6 mm or more diameter shall be provided to cater to maximum safe working load at adequate safety factor. There shall not be any intermediate joints on the ropes. It shall be continuous from winch to head frame.

No intermediate joints/terminations, either bolted or else, shall be provided on the wire ropes between winch and lantern carriage.

Essential tools for operation

A) Power drive

The power drive shall be connected to the winch via a matching coupler. To protect the hoist rope system against overload, the coupler shall incorporate a torque limiting clutch, pre-set at the factory.

B) Test lead

Flexible multi core test lead shall be identical to the electric cable specified earlier. The conductor core shall be insulated with ethylene propylene rubber and the complete cable core shall be matching with the main electric cable. Each test lead shall be provided with locking type male plug at one end and female plug at the other end.

C) Winch winding and adjusting handle

For manual operation of the winch drum and for monitor adjustment of the lantern carriage, suitable handless shall be supplied.

D) Trailing cable

EPR insulated PCP sheathed copper cable of size min. 2.5 sq mm cable shall be provided. No of circuit shall be as per datasheet/SOR.

E) Feeder Pillar

Weather proof Feeder pillar shall be of CRCA sheet of thickness 1.6mm for non-load and 2.0mm for load bearing. Cable entry shall be from bottom and gland plate shall be 3.00 mm thick. Panel shall be suitable for IP-65.

For hazardous area flame proof Feeder pillar shall be provided made of LM6 Aluminium body as per the vendor design. CCOR/ PESO and CIMFR certificate shall be submitted for the feeder pillar. Make of panel shall be flame proof DB/ JB/ control station mentioned in the vendor list attached in tender

@MECON Limited; all rights reserves

document.

In control schematic MCCB (Thermal magnetic release) shall be provided as isolator with ON/OFF/Trip indication, Interlock shall be provided between operation of fixture and motor. Motor shall be protected for overload by using suitable relay. Electrical interlock for upward and downward movement shall be provided. Auto-manual selector switch shall also be envisaged with electronic timer for operation in auto mode. Two nos. earthing stud shall be provided at FLP FP for termination of earth strip.

Lightning protection

Copper Lightning finial 1.2 mtr long shall be provided to the for lightening protection of high mast. It shall be bolted solidly to the head frame to get a direct conducting path to the earth through the mast. All material supply / erection for lightning protection shall be in contractor's scope.

Aviation lights

Aviation lights (twin type) shall be provided with suitable wiring.

5.0 DRAWINGS & DOCUMENTS

The offered high mast shall be a proven design. The design drawing and illumination distribution diagram shall be submitted to MECON for approval along with manufacturer's test certificates of following:

a) Steel plates used for the fabrication of mast
b) Steel wire rope
c) Winch
d) Foundation design calculation
e) Calculation Withstanding of High mast with highest wind pressure

6.0 INSPECTION

Inspection and testing of equipment shall be carried out by the owner/ consultant at the works of the contractor on final product to ensure conformity of the same with the acceptable criteria of technical specification, approval drags. and reference national/ international standards.

The contractor shall submit Quality Assurance Plan (QAP) for respective equipment within 3 weeks of award of contract.

QAP shall be prepared and furnished by the contractor in MECON Form No. 11.20(4.4) F-10 along with their internal in process quality checks.

Routine test and type test certificate shall be furnished for review.

Acceptance test shall be witnessed by owner/consultant.

7.0 PACKING AND DISPATCH

All the equipment shall be divided into multiple sections for protection and ease of handling during transportation. The equipment shall be properly packed for the selected mode of transportation, i.e., by ship, rail or trailer. The equipment shall be wrapped in polythene sheets before being placed in crates/ cases to prevent damage to finish. The crates / cases shall have skid bottoms for handling.

@MECON Limited; all rights reserves

MECON LTD, Delhi

Special notations such as 'Fragile', 'This side up', 'Centre of gravity', 'Weight', 'volume' 'Purchaser's particulars', 'P.O. no.' etc. shall be clearly and indelibly marked on the packages together with other details as per purchase order.

The equipment may be stored outdoors for long periods before installation. The packing shall be completely suitable for outdoor storage in areas with heavy rains and high ambient temperature unless otherwise agreed. In order to prevent movement of equipment/components within the crates, proper packing supports shall be provided.

****

MECON LTD, Delhi

@MECON Limited; all rights reserves

REV: 0
EDITION: 3

TECHNICAL SPECIFICATION

FOR

ELECTRICAL BULK MATERIAL

DOCUMENT No. : MEC/05/E9/TS/11

MECON LTD, Delhi

Prepared & Issued by

ELECTRICAL SECTION
MECON LIMITED
(A Govt. of India Undertaking)
13th& 15th Floor, North Tower, SCOPE MINAR,
Laxmi Nagar District Centre,
Delhi-110092 (India)

@MECON Limited; all rights reserves

Table of Contents

S.No.	DESCRIPTION	PAGES
01.00	INTENT	4
02.00	CODES AND STANDARDS	4
03.00	SITE CONDITIONS	6
04.00	DESIGN AND CONSTRUCTION REQUIREMENT	6-14
04.01	LOCAL CONTROL STATION	6
04.02	WELDING RECEPTACLES with PLUG	7
04.03	CABLE GLANDS	8
04.04	CABLE LUGS	8
04.05	HV TERMINATION and JOINTING KITS	9
04.06	CABLE TRAYS	9
04.07	LIGHTING and SMALL POWER DISTRIBUTION BOARDS	10
04.08	LIGHTING FIXTURES	11
04.09	SMALL POWER RECEPTACLES	12
04.10	SWICTHES	13
04.11	JUNCTION BOXES	13
04.12	LIGHTING POLES	14
04.13	SAFETY EQUIPMENTS	14
05.00	INSPECTION AND TESTING	14
06.00	PACKING AND DISPATCH	15

Rev	Date	Prepared by	Checked by	Approved by
0	11.07.2025	Chirosmita Banerjee	Saurabh Singh	Pankaj Shrivastava

© Copyright MECON Limited – All rights reserved.
THIS DOCUMENT IS THE SOLE PROPERTY OF MECON AND ISSUED FOR THE SPECIFIC PROJECT MENTIONED HEREIN. THIS IS NOT TO BE COPIED OR USED FOR ANY OTHER PROJECTS UNLESS EXPLICITLY PERMITTED BY MECON.

@MECON Limited; all rights reserves

AMENDMENT STATUS

(OLD NUMBER OF STANDARD: MEC/TS/05/E9/11)

Sl. No.	Clause / Paragraph / Annexure / Exhibit / Drawing Amended	Page No.	Revision	Date	By (Name)	Verified (Name)
1	Document Number replaced with New number as **MEC/05/E9/TS/11**	All	Rev 0/ Ed 3	11.07.2025		
2	Section re-name as Electrical Section (Oil & Gas SBU) Delhi	All	Rev 0/ Ed 3	11.07.2025		

MECON LTD, Delhi

@MECON Limited; all rights reserves

1.0 INTENT

a. The intent of this standard specification is to define the general requirements for design, manufacture, assembly and testing at manufacturer's works, packing, transportation and receipt at site with all materials and accessories of **Electrical Bulk Material.**

b. Bidder shall also refer SOR item for details/requirements as part of the project need.

2.0 CODES AND STANDARDS

2.1 The equipment shall comply with the requirements of latest revision of following standards issued by BIS (Bureau of Indian Standards), unless otherwise specified:

IS 5	Colours for ready mixed paints and enamels
SP 30 (BIS)	National Electrical Code 2011
IS 816	Code of practice for use of metal arc welding for general construction in mild steel
IS 875 - 3	Design Loads (Other Than Earthquake) For Buildings and Structures - Code of Practice - Part 3: Wind Loads
IS 1248	Direct acting indicating analogue electrical measuring instruments and their accessories
IS 1293	Plugs and Socket-outlets Of Rated Voltage Up to And Including 250Volts And Rated Current Up To 16 Amperes
IS 1364	Hexagon head bolts, screws and nuts of product grades A and B
IS1573	Electroplated Coatings of Zinc on Iron and Steel
IS 2157	Handloom shoddy woollen blankets
IS 2309	Code of practice for the protection of buildings and allied structures against lightning
IS 2418 - 1	Specification for Tubular Fluorescent Lamps for General Lighting Service - Part 1: Requirements and Tests
IS 2629	Recommended practice for hot dip galvanizing of iron and steel
IS 2633	Methods for testing uniformity of coating of zinc coated articles
IS 3043	Code of practice for earthing
IS 3323	Bi-pin Lamp Holders for Tubular Fluorescent Lamps

@MECON Limited; all rights reserves

MECON LTD, Delhi

IS 3618	Phosphate treatment of iron and steel for protection against corrosion
IS 3854	Switches for Domestic and Similar Purposes
IS 4759	Hot-dip zinc coatings on structural steel and other allied products
IS 5081	Glass Tubes for Tubular Fluorescent Lamps for General Lighting Service - Specification
IS 6005	Code of practice for phosphating of iron and steel
IS 8224	Electric Lighting Fittings for Division 2 Areas
IS 9794	Boards/blanks for sley bottom, race, cap and box back of cotton looms
IS 9974: Part 1	High pressure sodium vapour lamps: Part 1 General requirements and tests
IS 13021	AC supplied electronic ballasts for tubular florescent lamps
IS 13032	AC Miniature Circuit-breaker Boards for Voltages Not Exceeding 1000V
IS 16101	General Lighting: LED and LED Modules
IS 16102	Self-Ballasted LED lamps for General Lighting Services
IS 16103	LED modules for General Lighting
IS 16104	DC or AC Supply Electronic Control gear for LED Modules
IS 16107	Luminaries Performance
IS/IEC 60079-1	Explosive atmospheres - Part 1: Equipment protection by flameproof enclosures "d"
IS/IEC 60309	Plugs, sockets-outlets and couplers for industrial purposes
IS/IEC 60529	Degrees of protection provided by enclosures (IP CODE)

2.2 Wherever the requirements in this specification are in conflict with any of the above Standards, the requirements under this specification shall be binding.

2.3 In case of any contradiction between various referred standards/ specifications/ data sheet and statutory regulations the following order of priority shall govern. However, stringent of the below shall be followed

- Statutory regulations.
- Schedule of Rate
- Scope of Work/ Job specification.
- Design Basis.
- Data sheets.
- Standard Specification.
- Codes and standards.

@MECON Limited; all rights reserves

MECON LTD. Delhi

3.0 SITE CONDITIONS

The electrical bulk items shall be suitable for installation and satisfactory operation in indoor or outdoor installation as specified with humid and corrosive atmosphere.

The electrical bulk items shall be designed to operate under site conditions as specified in the site conditions. If not specifically mentioned therein, a design ambient temperature of 40°C for indoor, 50°C for outdoor and an altitude not exceeding 1000metres above mean sea level shall be considered.

The electrical bulk items described in this specification is intended for continuous duty at the specified ratings under the specified site conditions.

4.0 DESIGN AND CONSTRUCTION REQUIREMENTS

General

The offered equipment shall be brand new with state of art technology and proven field track record. No prototype equipment shall be offered.

The electrical bulk items shall be rated for supply voltage and frequency as specified and shall be suitable for +10% supply voltage variations and +3% supply frequency variations where applicable.

All electrical bulk items shall be supplied with fixing hardware such as nuts, bolts & washers of stainless steel necessary for installation.

All electrical bulk items paint shade shall be as per Manufacturer's standard unless otherwise specified.

All electrical bulk items specified for installation in hazardous areas, shall be tested by CMRI and duly approved by PESO Nagpur or DGMS Dhanbad or any other applicable statutory authority. All indigenous FLP equipment shall also have valid BIS license as required by statutory authorities.

All Indoor electrical equipment enclosures shall be cleaned free of rust, given a coat of red-oxide primer and finished with two coats of epoxy-based paint of shade RAL 7032. Outdoor equipment's enclosure paint shade shall be 631 as per IS-5.

4.1 LOCAL CONTROL STATION

Each local control station shall be surface mounted consisting of but not limited to following:

Enclosure	:	Die cast aluminium alloy LM6 for hazardous area FRP type material for safe area
Enclosure IP rating	:	Min. IP 55 for Outdoor Area /Min. IP 42 for Indoor Area.
Type of Protection	:	Minimum Ex 'd' type for hazardous area
Control devices	:	Shroud ed start push button (Green), Mushroom head, stay put type

@MECON Limited; all rights reserves

		padlocking, stop push button (Red), Local and Remote selector switch (if specified) Ammeter (If specified).
Gasket	:	Neoprene
Terminals	:	Copper suitable for termination of specified cable size, numbers as specified
Cable entries	:	As specified at bottom
Hardware	:	Stainless steel
Canopy	:	If specified for outdoor installation

Fully wired from circuit elements to pre-numbered terminals.

Accessories - Internal and external Grounding Terminal.

- "Start" pushbutton shall be non-maintaining with "Double Break" type contacts, one pair normally open and one pair normally closed.
- Mushroom head Stay put type "Stop" pushbutton shall be maintaining type contacts, one pair normally open and one pair normally closed.
- Ammeter shall be 62mm dia., taut band, moving iron type with suppressed scale to suit the motor starting current.
- Local/Remote selector switch shall be maintaining type contacts on selected position, one pair normally open and one pair normally closed.

4.2 WELDING RECEPTACLES with PLUG

Each welding receptacle with plug shall consist of but not limited to following items:

Type	:	4 Wire (3PH+N) with switch
Enclosure	:	Die cast aluminium alloy LM6 for hazardous area Fibreglass Reinforced Polyster (FRP) for safe area
Enclosure IP rating	:	Min. IP 55 for Outdoor Area / Min. IP 42 for Indoor Area.
Type of Protection	:	Minimum Ex 'd' type for hazardous area
Gasket	:	Neoprene
Terminals	:	Tin coated copper suitable for termination of specified cable size, numbers as specified
Cable entries	:	As specified at bottom
Hardware	:	Stainless steel
Canopy	:	If specified for outdoor installation

Fully wired from circuit elements to pre-numbered terminals
Accessories - Internal and external Grounding Terminal

@MECON Limited; all rights reserves

4.3 CABLE GLANDS

Cable glands shall be of nickel-plated brass unless otherwise specified and shall be manufactured in accordance with IS/IEC 60529 and IS/IEC 60079-1.

The single compression type cable glands shall be used for indoor panels/equipment (e.g., substation, control room etc). The cable glands for outdoor terminations shall be whether protected, double compression type and shall have PVC shroud for additional whether protection.

Cable glands forming a part of relevant FLP enclosure, shall be FLP type, tested by CMRI or any other recognized independent testing laboratory and approved by PESO/DGMS or any other statutory authority as applicable. Indigenous FLP glands shall have valid BIS license as per the requirements of statutory authorities. The size of cable glands supplied shall be appropriate to the size of cable so that flame proofness of glands is retained.

Cable glands shall meet the requirements of IP-55 (minimum) for suitable weather protection.

Entry thread of cable gland shall be compatible to the entry thread provided in the equipment (BS, ET, NPT, PG as applicable). If required, suitable reducers/adopters shall be used.

Cable glands shall be manufactured to provide cable sealing of inner and outer sheaths and clamping of armour by special ring.

Cable glands shall be constructed in such a way that same gland can be used for all types of armouring.

Cable glands shall be provided with earth tag, lock nut and IP sealing washer.

Each cable gland shall be provided with PVC shrouds.

4.4 CABLE LUGS

The cable lugs shall be tinned copper or aluminium as specified, tubular, seamless compression type unless specified otherwise.

The type of cable lug shall be as follows.

a) Single hole, ring type for power cable and earthing cable terminations.

b) Pin type insulated or fork type insulated for small power and control cable terminations

4.5 HV TERMINATION and JOINTING KITS

HV termination kits shall be heat shrinkable, stress control type, indoor or outdoor as specified.

HV termination kits shall be designed to provide a complete moisture seal including the crotch area of 3C cables and complete re-jacketing of individual cores.

HV termination kits shall be provided with insulated right-angle boots (if specified), cable preparation kits, sealing compounds and other accessories required for complete termination of specified HV

@MECON Limited; all rights reserves

MECON LTD, Delhi

cables.

HV termination kits shall provide creepage distances for indoor termination and outdoor termination in accordance with IS.

HV termination kits shall have provision for earthing of copper screen (solderless).

HV termination kits which shall be suitable for the cable size mentioned in cable schedule to outdoor equipment, transformer, switchgear, as specified

4.6 CABLE TRAYS

These shall be ladder type trays either prefabricated hot dip galvanized (610 gm per sq. meter) sheet steel trays or site fabricated angle iron painted trays as specified or prefabricated perforated cable trays.

a) Pre-fabricated hot dipped galvanized ladder type trays - The cable trays shall comply with the requirements specified in installation details.

b) Site fabricated angle iron trays - Angle iron cable trays shall be fabricated from standard rolled angle iron sections of size 75x75x8 mm for runners for supporting spans limited to 3000mm. Cross support shall be 25 x 6 mm MS flat for tray width upto 500 mm and 32 x 6 mm flat for tray of more than 500 mm wide and spacing between two cross supports shall not exceed 250 mm.

c) Pre-fabricated hot dipped galvanized perforated type trays - The cable trays shall comply with the requirements specified in installation details

Vertical supports for both the prefabricated and side fabricated type trays shall be fabricated out of ISMC 100 and horizontal supports shall be with 65 x 65 x 6 mm angle iron sections. Outer most tier of all vertical cable trays shall be covered with GI sheet for protection against physical damage to cables.

Cable racks and trays shall be covered by removable top covers on upper most tier allowing adequate ventilation in following cases where:

a) Mechanical damage of cables is likely to occur during maintenance in the plant.

b) Oil or spillage of chemicals can be expected.

c) Protection from exposure to sun is required.

GI cover sheet shall allow adequate ventilation to the cables and shall be in standard length of 3000 mm, flanged on both sides for fixing on cable tray. Covers shall be complete with required GI hardware.

If specified, pre-fabricated ladder type cable trays shall be suitable for concentrated load of one person (75 kg) standing on cable trays.

@MECON Limited; all rights reserves

4.7 LIGHTING and SMALL POWER DISTRIBUTION BOARDS

Distribution boards shall be made of 1.6mm thick sheet steel and shall be industrial type, dust and vermin proof. In case Distribution boards are located in Hazardous area, they shall be made of Die cast aluminium alloy LM6 and minimum Protection type shall be Ex 'd' suitable for Zone 1 & 2, Gas group IIA/IIB & temperature class T3 unless mentioned elsewhere. Distribution boards shall be indoor/outdoor type as specified. Indoor type distribution boards shall have IP42 degree of protection and shall be suitable for surface or flush mounting on wall surface as specified.

Distribution boards located outdoor shall be Min. IP55 weather protected and shall also have integral canopy for additional weather protection. The canopy shall be made of 2mm thick galvanized sheet steel or FRP where these are separate from the equipment.

Distribution boards shall have TPN incoming feeder and single phase or three phase outgoing feeders as specified. Distribution boards shall be equipped with phase and neutral busbars of required current carrying capacity. The outgoing feeders shall be provided with single pole miniature circuit breakers (MCBs) for safe areas and double pole MCBs for hazardous areas for single phase distribution and 4 pole MCCB/MCBs for 3-phase distribution. The incomer shall be with RCCB/RCBO unit for lighting and small power distribution and switch fuse unit for other auxiliary distribution unless otherwise specified.

Miniature circuit breakers shall be mounted in such a way that the operating levers projects outside the front bakelite cover plates for ease of operation. A hinged door to cover the operating knobs shall be provided. In addition, a circuit diagram indicating incomer details and outgoing details viz. circuit number, circuit rating, load connected and details of the load shall be pasted inside the distribution boards. Also a laminated copy of the diagram shall be provided inside the distribution boards in a suitably designed pocket.

Two external earthing studs for connection to the plant earthing grid shall be provided on the panel. Further, the distribution boards shall be provided with an earth bus bar with terminal studs for connection to the third core of each outgoing circuit. Each circuit phase and neutral shall be given ferrule numbers. Complete wiring inside the panel, shall be neatly bunched with PVC tape and button. Sufficient terminals shall be provided in the terminal block so as to ensure that not more than one wire (core) is connected to a terminal.

The distribution board shall have knock out holes or removable gland plate for the entry of incoming and outgoing conduits or cables.

All MCBs shall be of M9 category as per IS 8828 and sensitivity of ELCBs shall be 100 mA unless otherwise specified.

All switches or fuse switches shall be air break type provided with quick make/break manual operating mechanism.

Fuses shall be non-deteriorating HRC cartridge link type. Power fuses shall be pressure fitted type and shall preferably have ribs on the contact blades to ensure good line contact.

AC voltmeters and ammeters shall be provided in incoming feeder of distribution boards if specified. All AC ammeters and voltmeters shall be of digital type with accuracy class of 1.5 as per IS.

@MECON Limited; all rights reserves

Wherever the size of incoming cable to distribution boards is more than 35 sqmm a suitable cable adapter box shall be provided and attached to the distribution boards. The incoming cable leads shall be connected to terminal block (bolted type terminals) of required size. This terminal block shall be connected to TPN incomer unit through separate PVC insulated copper conductor wires/bus bars. Sufficient space shall be provided (200 to 250mm) between gland plate and the bottom of terminal block for easy termination

4.8 LIGHTING FIXTURES

Lighting fixtures shall be manufactured in accordance with IS 2418-1, IS 3323, IS 5081, IS 13021, IS 16101, IS 16102, IS 16103, IS 16104, IS 16107, IS/IEC 60529 and IS/IEC 60079.

Outdoor lighting fixtures shall have minimum IP55 degree of protection. Indoor lighting fixtures shall have minimum IP20 degree of protection.

Lighting Fixtures shall be suitable for termination of required cable sizes as indicated in lighting and small power layouts and installation details.

Lighting fixtures paint shade shall be as per Supplier's standard.

High energy efficient LED lighting fixtures shall be used preferably with aluminium housing, superior light output and integral driver.

Hazardous area lighting fixtures shall be with LED lamp with enclosures shall be made of Die cast aluminium alloy LM6 and minimum Protection type shall be Ex 'd' suitable for Zone 1 & 2, Gas group IIA/IIB & temperature class T3 unless mentioned elsewhere.

- Battery Room lighting fixtures shall be suitable for Zone 1 & 2, Gas group IIC & temperature class T3 unless mentioned elsewhere.
- All lighting fixtures shall be of high-power factor type i.e., at least 0.9 or more. Lighting fixtures have shall be energy efficient type with BEE level higher than 3 Star.
- All critical area lighting fixtures shall have inbuilt battery back-up of 30 minutes.

4.9 SMALL POWER RECEPTACLES

Small Power receptacles shall be manufactured in accordance with IS 1293, IS/IEC 60309, IS/IEC 60079.
Each receptacle shall consist of but not limited to following items

Type	:	3 Wire (1PH+N+G) with switch
Enclosure	:	Die cast aluminium alloy LM6 for hazardous area Fibreglass Reinforced Polyester (FRP) for safe industrial area ABS plastic for Safe non-industrial area.
Enclosure IP rating	:	Min. IP 55 for Outdoor Area / Min. IP 42 for Indoor Area.

@MECON Limited; all rights reserves

MECON LTD. Delhi

Type of Protection : Minimum Ex 'd' type for hazardous area
Gasket : Neoprene
Terminals : Copper suitable for termination of specified cable/wire size, numbers as specified
Cable entries : As specified at bottom
Hardware : Stainless steel
Canopy : If specified for outdoor installation

Fully wired from circuit elements to pre-numbered terminals for Hazardous and Safe Industrial area.
Accessories -Internal Grounding Terminal

4.10 SWITCHES

Switches shall be manufactured in accordance with IS 3854, IS/IEC 60079. Each switch shall consist of but not limited to following items:

Type	:	1 pole to 4 pole as specified
Enclosure	:	Die cast aluminium alloy LM6 for hazardous area Fibreglass Reinforced Polyester (FRP) for safe area ABS plastic for Safe non-industrial area.
Enclosure IP rating	:	Min. IP 55 for Outdoor Area / Min. IP 42 for Indoor Area.
Type of Protection	:	Minimum Ex 'd' type for hazardous area
Gasket	:	Neoprene
Terminals	:	Copper suitable for termination of specified cable size, numbers as specified
Cable entries	:	As specified at bottom
Hardware	:	Stainless steel
Canopy	:	If specified for outdoor installation

Fully wired from circuit elements to pre-numbered terminals
Accessories - Internal Grounding Terminal

4.11 JUNCTION BOXES

Junction Box shall be manufactured in accordance with IS 8224, IS/IEC 60079. Each junction box shall consist of but not limited to following items:

Type : 2 way to 6 way as specified
Enclosure : Die cast aluminium alloy LM6 for hazardous area
Fibreglass Reinforced Polyester (FRP) for safe area
Enclosure IP rating : Min. IP 55 for Outdoor Area / Min. IP 42 for Indoor Area
Type of Protection : Minimum Ex 'd' type for hazardous area
Gasket : Neoprene
Terminals : Copper suitable for termination of specified cable size, numbers as

@MECON Limited; all rights reserves

MECON Ltd. Delhi

specified

Cable entries	:	As specified at sides / bottom / top depending on number of ways
Hardware	:	Stainless steel
Canopy	:	If specified for outdoor installation

Fully wired from circuit elements to pre-numbered terminals
Accessories - Internal Grounding Terminal

4.12 LIGHTING POLES

All Lighting poles shall be made of galvanized steel, designed for wind parameters as per IS 875 (part 3) and loading of specified lighting fixtures and shall comply with relevant standards.

The flood lighting poles wherever specified shall be provided with suitable mounting brackets with hardware for specified number of flood lighting fixtures, one hand hole at approx. 1m height having removable bolted cover, internal and external earthing studs.

The street lighting poles wherever specified shall be provided with suitable mounting brackets with hardware for specified number of street lighting fixtures, one hand hole at approx. 1m height having removable bolted cover, internal and external earthing studs.

The flood lighting, street lighting and ground poles shall be provided with suitable base plate and fixing material for fixing on concrete foundation. The fixing details and foundation loading details shall be provided.

4.13 Miscellaneous and Safety Equipment

Following equipment shall be supplied in substation, as per Indian Electricity Rules:

- Fire buckets filled with clean dry sand and ready for immediate use for extinguishing fires suitably mounted on G.I. stand and fire extinguisher (carbon dioxide, dry chemical extinguisher etc.) suitable for dealing with electric fires shall be conspicuously marked and kept.
- First aid boxes containing ointments and medicines for immediate treatment of injuries (As prescribed by Indian Red Cross Society or equivalent).
- Instructions of restoration of persons suffering from electric shock in English, Hindi and local language of the district shall be affixed in a conspicuous place.
- Danger boards (H.V., M.V.) shall be provided on transformer gate, switchboards, entrance to switchgear room and at other places as required by Purchaser.
- Safety insulation mats for operation and maintenance of electrical equipment.
- Ladders for maintenance of electrical equipment.

5.0 INSPECTION AND TESTING

@MECON Limited; all rights reserves

MECON LTD Delhi

Inspection and testing requirements shall be in accordance with the respective equipment specification, applicable codes and standards indicated and also Vendor standard inspection and testing requirements. Purchaser reserves the right to witness all tests with sufficient advance notice from Vendor. The test reports shall be approved by Purchaser before dispatch.

Purchaser also reserves the right of inspection of any electrical works equipment / material during fabrication. Vendor shall furnish all necessary information concerning the supply to Purchaser.

All routine and acceptance tests shall be carried out at Vendor's / Manufacturer's work under his care and expense.

Type and special tests shall be carried out at Vendor's work or independent approved testing laboratory under his care and expense. Type and special test certificate of identical rating of equipment may be acceptable in lieu of actual type and special tests if approved by Purchaser.

All testing instruments shall be calibrated with proper validity and have traceability to National Standards.

6.0 PACKING AND DISPATCH

All the equipment shall be divided into several shipping sections for protection and ease of handling during transportation. The equipment shall be properly packed for selected mode of transportation i.e. by ship/rail or trailer. The panels shall be wrapped in polyethylene sheets before being placed in wooden crates /cases to prevent damage to the finish. Crates /cases shall have skid bottoms for handling. Special precaution notations such as Fragile, This side up, center of gravity, weight, Purchaser's particulars, Purchase number etc. shall be clearly marked on the package together with other details as per purchase order.

The equipment may be stored outdoors for long periods before installation. The packing should be suitable for outdoor storage in areas with heavy rains and high ambient temperature unless otherwise agreed.

****

@MECON Limited; all rights reserves

REV: 0
EDITION: 3

TECHNICAL SPECIFICATION

FOR

EARTHING and LIGHTNING PROTECTION

DOCUMENT No. : MEC/05/E9/TS/13

Prepared & Issued by

ELECTRICAL SECTION
(Oil & Gas SBU)
MECON LIMITED
(A Govt. of India Undertaking)
13th& 15th Floor, North Tower, SCOPE MINAR,
Laxmi Nagar District Centre,
Delhi-110092 (India)

@MECON Limited; all rights reserves

MECON LTD, Delhi

INDEX

Sl. No.	Description	Page No
01.00	INTENT	4
02.00	CODES AND STANDARDS	4
03.00	EARTHING SYSTEM	5
04.00	LIGHTNING PROTECTION SYSTEM	11
09.00	DRAWINGS AND DOCUMENTS	18

MECON LTD, Delhi

Rev	Date	Prepared by	Checked by	Approved by
0	11.07.2025	Aashish Moyal	Saurabh Singh	Pankaj Shrivastava

© Copyright MECON Limited – All rights reserved.
THIS DOCUMENT IS THE SOLE PROPERTY OF MECON AND ISSUED FOR THE SPECIFIC PROJECT MENTIONED HEREIN. THIS IS NOT TO BE COPIED OR USED FOR ANY OTHER PROJECTS UNLESS EXPLICITLY PERMITTED BY MECON.

@MECON Limited; all rights reserves

AMENDMENT STATUS

(OLD NUMBER OF STANDARD: MEC/TS/05/E9/13)

Sl. No.	Clause / Paragraph / Annexure / Exhibit / Drawing Amended	Page No.	Revision	Date	By (Name)	Verified (Name)
1	Document Number replaced with New number as **MEC/05/E9/TS/13**	All	Rev 0/ Ed 3	11.07.2025		
2	Section re-name as Electrical Section (Oil & Gas SBU) Delhi	All	Rev 0/ Ed 3	11.07.2025		

MECON LTD, Delhi

@MECON Limited; all rights reserves

1.0 INTENT

The intent of this standard specification is to define the general requirements for design, manufacture, assembly and testing at manufacturer's works, packing, transportation and receipt at site with all materials and accessories of Earthing and Lightning Protection.

2.0 CODES AND STANDARDS

The work shall be carried out in the best workmanlike manner in conformity with this specification, the relevant specifications/codes of practice of Indian Standard Institution, approved drawings and instructions of the Engineer-in-Charge or his authorized representative issued from time to time. In case of any conflict between the standards, the instructions of Engineer-in-Charge shall be binding.

IEC 62305	Protection Against Lightning
IS 2309	Protection of building and allied structure against lightning
IS 3043	Code of practice for earthing
NBC 2016	National Building Code
NEC 2023	National Electric Code
OISD 180	Lighting Protection

Wherever the requirements in this specification are in conflict with any of the above Standards, the requirements under this specification shall be binding.

In case any contradiction between various referred standards/specification/data sheets and statutory regulation etc the following order of priority shall be govern -

- Statutory regulations.
- Schedule of Rate
- Scope of Work/ Job specification.
- Design Basis.
- Data sheets.
- Standard Specification.
- Codes and standards.

@MECON Limited; all rights reserves

3.0 EARTHING SYSTEM

GENERAL

Entire system shall be earthed in accordance with the provisions of the relevant IEC recommendations/ IS code of practice IS 3043 and Indian Electricity Rules, so that the values of the step and contact potentials in case of faults are kept within safe permissible limits. Parts of all electrical equipment and machinery not intended to be alive shall have two separate and distinct earth connections each to conform to the stipulation of the Indian Electricity Rules and apparatus rated 240V and below may have single earth connections.

The stations shall be equipped with an equipotential meshed grounding network. All exposed conductive parts or elements of the station systems will be connected to this network. The earthing systems of the various stations are part of the protection systems for electrical power supply, instrumentation, control and supervisory system. The earthing system consists of the main grounding grid, the grounding rods, the building foundation grounding and the equipment grounding.

Supply of all other erection/consumable required to complete the installation shall be the responsibility of the contractor. All hardware used for earthing shall be hot dip galvanized.

Any other items not specifically mentioned here but necessary for completeness of job shall be in the scope of contractor & shall be supplied by contractor without any extra cost.

All shops and buildings as well as the electrical sub-stations and electrical rooms shall be provided with a ring main earthing system each. Individual ring main earthing systems shall again be interconnected as a network.

For stations, which are to be extended, the existing earthing system shall be considered. The layout of new earthing system shall match to the existing installations. The new and the existing grounding network must be interconnected at two (2) locations, at least.

The ring earthing system around each building shall be laid at a distance of approximately 1.5 m from the building and at a depth of approximately 0.8m. The ring shall be bonded at intervals to the building steel structures, reinforcement of building columns and also to pipes, wherever they are crossing. The earth ring shall further be connected at intervals to deep earthing electrodes to achieve a combined earth resistance of less than one ohm.

The grounding network system will be installed in different locations have different soil characteristics according to the location of the stations. Before design and installation of the grounding network the actual soil conditions in the station areas must be determined by adequate soil resistance measurements by the contractor & submit for review & approval.

Station earthing should have low earth resistance, low touch & step potential.

@MECON Limited; all rights reserves

EARTHING CONDUCTOR

The main grid conductor shall be hot dip galvanized G.I. Flat or PVC insulated copper conductor, Size & type of conductor shall be as marked on the drawings/as mentioned in the scope of work/design basis. Thickness of hot dip galvanizing shall not be less than 80 microns.

DESIGN REQUIREMENT

The earth resistance of the overall interconnected station grounding network shall not exceed 1 Ω.

For the purpose of dimensioning the earthing lines/conductors, the duration of the earth fault current shall be taken as 0.3 seconds.

All exposed metal part such as HT/LT switchgear, DP/FP structure, distribution board, metal clad switchgear enclosure, lamp brackets, lamp holder, plug sockets, lighting poles, junction boxes, high mast etc shall be properly earthed by connecting these to the earth electrode by means of GI wire/Flat or PVC insulated Cu conductor of approved size to pass the fault current safely to earth in case of any fault.

For different floors in a building, localized ground mats shall be formed and connected to the ground earthing ring through vertical risers. The earthing mat shall be common to both power and lighting installations.

For the UPS, the SCADA and telecommunication systems with their equipment a separate grounding network with sufficient cross-section to avoid interference shall be installed. This grounding network shall be connected to the common station grounding network on one (1) separable and indicated connection point, within the electrical building or equipment container/enclosure.

Before design and installation of the grounding network the actual soil conditions in the station areas must be determined by adequate soil resistance measurements.

The required conductor spacing, the total length of the grounding grid and the required grounding material cross-section shall be calculated under consideration of the maximum earth fault current, to maintain touch and step voltages within reasonable limits. The impedance of the fault current path and protective devices shall be chosen that the faulted circuit will be disconnected from the supply within the required time. A respective grounding calculation with report shall be performed for each station and is to be submitted to the Client/MECON for approval.

Multiple connections of grounding conductors shall only be carried out above ground. For these connections the respective grounding bars are to be installed. Extensions of single grounding conductors can be permitted below ground under use of compression connectors or welding connections, with repair painting and coating of the connection point.

@MECON Limited; all rights reserves

All connections of conductors on equipment shall be performed with pressure type lugs or connectors and threaded bolts, screws, spring-washers and washers. Special care must be taken to avoid the arising of a chemical element. Connections between bare copper and iron parts must be protected in a special manner and shall only be executed on above-ground connection points (grounding bars) or inside of pits.

The power supply cables (LT) from the sub-station and the distribution cables to individual motors shall have 4/3.5 cores. LT power supply cables shall have four cores and the fourth core shall have cross-sectional area of 50% of the other cores generally. The fourth core of the main supply lines shall be connected to the solidly earthed neutral bar in the substation switchgear as well as at the earth bars in MCC/distribution boards.

Separate electronic earthing system shall be provided for all electronic equipment like PLCs, weighing panel, computer etc.

EARTHING NETWORK

The earthing installation shall be done in accordance with the earthing drawings and the standard drawings of reference attached with this document. The entire earthing system shall fully comply with the Indian Electricity Act and Rules. The contractor shall carry out any changes desired by the Electrical Inspector or the owner, in order to make the installation conform to the Indian Electricity Rules at no extra cost. The exact location on the equipment shall be determined in field, in consultation with the Engineer-in-Charge or his authorized representative. Any changes in the methods, routing, size of conductors etc shall be subject to approval of the Owner/ Engineer-in-Charge before execution.

Excavation and refilling of earth, necessary for laying underground earth bus loops shall be the responsibility of the contractor.

The main earth grid shall be laid at a depth of minimum 800 mm below grade level. Wherever RCC cable trenches are available, the earth lead shall be laid in the trenches and shall be firmly cleared to the walls of concrete lined trenches. The earthing strip shall be protected against mechanical damage.

A common grounding system network (Main earthing grid) will be made underground by using 50 mm x 6 mm/ 75x10 mm GI earthing strip connected to earth electrodes in loop-in & loop-out system and connecting the electrical equipment to network. In RCC cable trench one number earth strip of size 50 x 6 mm shall be run throughout the length of the trench.

Earthing system around each building shall be laid at distance approximately 1.5 meter from the building & at a depth of approximately 0.8m. The ring shall be bonded at intervals to the building steel structure, reinforcement of building columns & pipes wherever they are crossing. The earth ring shall further be connected to deep earthing electrodes to achieve a combined earth resistance of less than One or Two ohm as specified earlier.

In process unit areas, the earthing cable shall be run along cable trays wherever specified in the layout

@MECON Limited; all rights reserves

drawings. The earthing cable shall be suitably cleated and electrically bonded to the cable tray at regular intervals.

Joints and tapping in the main earth loop shall be made in such a way that reliable and good electrical connections are permanently ensured. All joints below ground shall be welded and suitably protected by giving two coats of bitumen and covering with Hessian tape. All joints above ground shall be by means of connectors/ lugs as far as practicable. Tee connectors shall be used for tapping, earth leads from the main earth loop wherever it is installed above ground. Earthing plates shall be provided for earthing of two or more equipment at a place from earth grid. Where aluminium cable risers are to be connected to the underground GI earth bus, the aluminium cable riser shall be taken to the nearest earth pit and terminated through a bolted joint. If this is not practicable, then G.I. risers shall be brought above grade and a bolted joint shall be made between this GI riser and the aluminium cable termination. This G.I. Riser shall be protected applying two coats of bituminous paint/bitumen on the exposed portion.

Conduits in which cables have been installed shall be effectively bonded and earthed. Cable armours shall be earthed at both ends.

INSTALLATION OF EARTH ELECTRODES

Earth pipe electrodes shall be installed as shown in the earthing layout drawings shall be in accordance with the standard drawings, specification and IS: 3043. Their location shall be marked to enable accurate location by permanent markers.

All earth electrodes shall preferably be driven to sufficient depth to reach permanently moist soil. Electrodes shall preferably be situated in a soil which has a fine texture and which is packed by watering and ramming as tightly as possible. Wherever practicable, the soil shall be dug up, all lumps broken and stones removed from the immediate vicinity of the electrodes.

All earth electrodes shall be tested for earth resistance by means of standard earth test meter. The tests shall take place in dry months. If necessary, a number of electrodes shall be connected in parallel to reduce the earth resistance, shall be in the scope of contractor. The distance between two electrodes shall not be less than twice the length of electrode.

The electrodes shall have a clean surface, not covered by paint, enamel, grease or other materials of poor conductivity.

Tentative no of earth pits shown in drawing are only for reference to the contractor. The exact location and number of earth electrodes required at each location shall be determined in the field in consultation with the owner/Engineer-in- Charge, depending on the soil strata and resistivity, to meet the ohmic values prescribed in this specification. The contactor shall design the earthing system accordingly & submit for review & approval.

Earth Electrodes shall be located avoiding interference with road, building foundation, column etc.

@MECON Limited; all rights reserves

Individual earth electrode shall be provided for each lightning arrestor and lightning mast. The electrodes shall be so placed that all lightning protective earths may be brought to earth electrode by a short and straight a path as possible to minimize surge impedance.

The disconnect facility shall be provided for the individual earth pits to check their earth resistance periodically. All the earth electrodes shall be suitably numbered and this should be indicated in as built drawings.

CONNECTION

All electrical equipment is to be doubly earthed by connecting two points on equipment to a main earthing ring. The earthing ring will be connected via links to several earth electrodes. The earth grid formed shall be a closed loop as shown in the drawing with earth electrodes connected to the grid with double strip connection. The cable armour will be earthed through the cable glands.

In hazardous areas all major process equipment shall be connected to the earthing ring by means of anti-loosening connections and all pipelines will be bonded and earthed on entering the battery limit of the process area.

The following shall be earthed.

1. Transformer neutrals & body
2. Double Pole & Four Pole structures
3. CT/PT neutrals
4. Neutral Grounding Resistors
5. Lightning Arrestors
6. All switchgear and their earth buses, bus duct
7. Motor Frames
8. Bud ducts
9. Cable trays
10. UPS, Telecommunication system, RTU's, Control panels & other instruments etc.
11. Non-current carrying metallic parts of electrical equipment such as switchgear, switch racks, panel boards, motor control centres, lighting, power and instrument panels, push button stations, cable trays, pipes, conduits, terminal boxes, etc.
12. All fences, gates/enclosures, housing electrical equipment
13. All steel structures, rails etc. including bonding between sections
14. Shield Wire
15. Structural steel and Columns
16. Loading racks
17. Lighting Mast, poles
18. Lightning rods (Mast)

@MECON Limited; all rights reserves

MECON LTD, Delhi

19. Tanks and vessels containing flammable materials.
20. Rotating parts of the agitators, pumps etc. through spring loaded brushes of suitable grade.
21. Earth continuity conductor shall be provided for flanges.

Conductor size for connection to various equipment shall be as indicated on Earthing Layout Drawings/ shall be calculated by Bidder during the detail engineering.

Two distinct conductors directly connected to independent earth electrodes, which in turn shall be connected to the earth and earth system. The earth connection shall be properly made. A small flexible aluminium cable loops to bridge the top cover of the transformer and the tank shall be provided to avoid earth fault current passing through fastening bolts when there is a Lightning surge, high voltage surge or failure of the bushings.

The shield wire shall be connected with the main grid solidly and not through supporting steel structures.

All paint, scale and enamel shall be removed from the contact surface before the earthing connections are made.

All earthing connections for equipment earthing shall be preferably from the earth plate mounted above ground. In case of G.I. Earth Loop all underground "T" connections shall be of the same size as main loop however in case of PVC insulated aluminium conductor loops underground joints shall be completely avoided. Connections to motors from earth plate or main loop conductor brought above ground shall not be less than following:

Anchor bolts or fixing bolts shall not be used for earthing connection.

All hardware used for earthing installations shall be hot dip galvanized or zinc passivated. Spring washers shall be used for all earthing connections of equipment.

Lighting fixtures shall be earthed through the extra core provided in the lighting cable for this purpose.

TESTING OF EARTHING SYSTEM

Earthing systems/connections shall be tested as follows:

Resistance of individual electrodes shall be measured after disconnecting it from the grid.

Earthing resistance of the grid shall be measured after connecting all the electrodes to the grid. The resistance between any point on the metallic earth grid and the general mass of earth shall not exceed 1 ohm.

The resistance to earth shall be measured at the following:

1) At each electrical system earth or system neutral earth.

@MECON Limited; all rights reserves

2) At each earth provided for structure lightning protections.
3) At one point on each earthing system used to earth electrical equipment enclosure.
4) At one point on each earthing system used to earth wiring system enclosures such as metal conduits and cable sheaths or armour.
5) At one point on each fence enclosing electrical equipment.

Measurement shall be made before connection is made between the ground and the object to be grounded.

4.0 LIGHTNING PROTECTION SYSTEM

Lightning protection system shall generally comprise air termination system (lightning finials, air terminals or collector rods, roof conductors or collector lines), down conductor system (down conductors & test links) and earth termination system (earth electrodes along with pits and strips). These individual elements of an LPS should be connected together using appropriate lightning protection components to ensure that in the event of a lightning current discharge to the structure, the correct design and choice of components will minimize any potential damage.

The number, types, materials and sizes shall be in accordance with the drawings. All lightning arrestor earth leads of the buildings and plant units shall be connected to the cage ring.

All buildings and plant structures vulnerable to lightning strokes owing to their height or exposed situation shall be protected against atmospheric flash-overs and lightning strokes in such a manner as to eliminate any danger to the personnel employed therein.

Lightning affecting a structure can cause damage to the structure itself and to its occupants and contents, including failure of internal systems. The damages and failures may also extend to the surroundings of the structure and even involve the local environment. The scale of this extension depends on the characteristics of the structure and on the characteristics of the lightning flash.

RISK ASSESSMENT

IEC 62305 consists of the following parts, under the general title Protection against lightning:

Part 1: General principles
Part 2: Risk management
Part 3: Physical damage to structures and life hazard
Part 4: Electrical and electronic systems within structures

The lightning current is the source of damage. The following situations shall be taken into account, depending on the position of the point of strike relative to the structure considered:

- S1: flashes to the structure;
- S2: flashes near the structure;

@MECON Limited; all rights reserves

- S3: flashes to the services connected to the structure;
- S4: flashes near the services connected to the structure.

Each source of damage may result in one or more of three types of damage:

- D1 Injury of living beings due to step and touch voltages
- D2 Physical damage (fire, explosion, mechanical destruction, chemical release) due to lightning current effects including sparking
- D3 Failure of internal systems due to Lightning Electromagnetic Impulse (LEMP)

The following types of loss may result from damage due to lightning:

- L1 Loss of human life
- L2 Loss of service to the public
- L3 Loss of cultural heritage
- L4 Loss of economic value

Damages & loss in a structure according to different points of strike of lightning:

Point of strike	***Source of damage***	***Type of damage***	***Type of loss***
Structure	S1	D1 D2 D3	L1,L4 L1,L2,L3,L4 L1,L2,L4
Near a structure	S2	D3	L1,L2,L4
Service connected to the structure	S3	D1 D2 D3	L1,L4 L1,L2,L3,L4 L1,L2,L4
Near a service	S4	D3	L1,L2,L4

In order to evaluate whether or not lightning protection of an object is needed, a risk assessment in accordance with the procedures contained in IEC 62305-2 shall be made. The following risks shall be taken into account, corresponding to the types of loss:

- R1: risk of loss of human life;
- R2: risk of loss of services to the public;
- R3: risk of loss of cultural heritage.

Protection against lightning is needed if the risk R (R1 to R3) is higher than the tolerable level RT

@MECON Limited; all rights reserves

MECON LTD, Delhi

$$R > RT$$

In this case, protection measures shall be adopted in order reduce the risk R(R1 to R3) to the tolerable level

$$R \leq RT$$

Risk assessment shall be carried out by the Bidder and submitted for the review and approval.

PROTECTION CONCEPT

Non-isolated concept of lightning protection system is applied for all structures.

External lighting protection system

The main and most effective measure for protection of structures against physical damage is considered to be the lightning protection system (LPS). It usually consists of both external and internal lightning protection systems.

An external LPS is intended to a) intercept a lightning flash to the structure (with an air-termination system), b) conduct the lightning current safely towards earth (using a down-conductor system), c) disperse the lightning current into the earth (using an earth-termination system).

Internal lighting protection system

An internal LPS prevents dangerous sparking within the structure using either equipotential bonding or a separation distance (and hence electrical insulation) between the external LPS components and other electrically conducting elements internal to the structure.

Since, we are using the structure to be protected as natural lightning protection component, there will be a partial flow of lightning current across it and therefore the electrical equipment inside the structure becomes vulnerable to this lightning current and shall be installed with at least Type 1+2 Surge Protection Devices (SPD) rated to discharge 10/350microsec lightning impulse current. 1

The Mains LT power supply panel, sub-distribution panel, PDB, PCC, MCC panels for pumps & compressors etc are to be installed with Type 1+2 SPD.

The electrical fittings on the roof of the sheds like light fixtures etc. are also to be installed with Type 1+2 SPD's.

The various earthing grids like lightning earth pits, electrical safety earth pits, instrumentation earth pits shall be directly interconnected to form an equi-potential surface during the event of lightning strikes. The direct connection is to be made using GI flats of sufficient size. And places where direct interconnection of various earth pits is not possible due to operational reason, isolating spark gap (ISG) is to be used for establishing the interconnection to meet the operational requirement of various earth pits

@MECON Limited; all rights reserves

MECON LTD Delhi

Air termination system

The role of an air termination system is to capture the lightning discharge current and dissipate it harmlessly to earth via the down conductor and earth termination system. Therefore, it is vitally important to use a correctly designed air termination system. BS EN/IEC 62305-3 advocates the following, in any combination, for the design of the air termination:

− Air rods (or finials) whether they are free standing masts or linked with conductors to form a mesh on the roof

− Catenary (or suspended) conductors, whether they are supported by free standing masts or linked with conductors to form a mesh on the roof

− Meshed conductor network that may lie in direct contact with the roof or be suspended above it (in the event that it is of paramount importance that the roof is not exposed to a direct lightning discharge)

Air terminals shall be mounted on top of buildings or structure as required. All air terminals shall be inter-connected with roof conductors, pipes, hands rails or any other metallic projection above the roofs shall also be bonded to the roof conductors. All metallic chimneys, ducts and the like above the roof of the structure shall be bonded to and form part of the air termination network. Vertical air termination points shall project at least 30 cm above the object on which it is fixed.

The three basic methods recommended for determining the position of the air termination systems are:

− The rolling sphere method
− The protective angle method
− The mesh method

Down conductors from air terminals or from roof conductors shall be routed as directly as possible to the test links on earth buses, with minimum bends.

Four protection levels have been determined based on certain parameters and each level has a fixed set of maximum and minimum lightning current parameters.

LPL	***I***	***II***	***III***	***IV***
Maximum current (kA)	200	150	100	100
Minimum Current (kA)	3	5	10	16

Each Lightning Arrestor shall be connected to a separate electrode located as close as possible to it and within the fenced area for each set of arrestors. The two nos. electrodes for each set of arrestors shall be

@MECON Limited; all rights reserves

spaced about 5 meters apart so that they are all within the enclosing fence. Each of these electrodes shall be connected to the main earth grid.

All provisions regarding connections of conductors for equipment earthing system shall also apply to lightning protection system.

In corrosive atmospheres, plumbing metal for corrosion protection shall cover lightning finials or air terminals.

The layout and design of lightning protection systems for building extensions or new buildings and structures provided within existing station areas shall match the existing design.

All connections between the different parts of lightning protection systems and the connections to the earthing system must be performed in a manner such that the arising of chemical elements will be avoided.

Minimum Lightning Protection Level-II shall be considered for the Oil & Gas installations.

Natural Components of Collectors

Metal cladding, metal roof structures, metal components of roof structures, gutters and railings may be considered as natural components of collectors as per standard requirements.

The requirements of the standards, such as the following, have to be considered:

- Parts must be permanently conductively connected,
- Minimum thickness of the metal involved,
- Cross-sections of the parts.

Installations with metal casings need not to be fitted with collectors taking into consideration the above-mentioned minimum requirements.

Protective coatings or insulation between metal parts shall be electrically bridged.

Mesh Type Collectors

Buildings shall be provided with mesh-type collector lines. Protruding roof superstructures, such as ladders, chimney stacks, pipes, antenna mounting brackets, etc. and other metallic parts of buildings which are located near the roof (e.g. louvers of ventilation openings) must be directly connected to the collector lines.
This method is suitable where plain surfaces require protection if the following conditions are met:

Air termination conductors must be positioned at roof edges, on roof overhangs and on the ridges of roof with a pitch in excess of 1 in 10 (5.7º).

@MECON Limited; all rights reserves

No metal installation protrudes above the air termination system.

Modern research on lightning inflicted damage has shown that the edges and corners of roofs are most susceptible to damage. The air rods should be spaced not more than 10 m apart and if strike plates are used as an alternative, these should be strategically placed over the roof area not more than 5 m apart.

Class of LPS	Mesh size (m)
I	5 x 5
II	10 x 10
III	15 x 15
IV	20 x 20

Collector Rods

Collector rods shall be used for roof superstructures featuring mechanically or electrically operated equipment, such as ventilators and non-conductive parts projecting from the mesh plane by 0.3 m. The angle of protection and a certain minimum distance have to be observed.

Outdoor electrical facilities for HVAC or other purposes not located in the protective area of earthed structures, installations or buildings, including exposed electrical equipment shall be protected by collectors.

Buildings with sheet metal roofs where the thickness of the sheet is smaller as the required value, the collector mesh must be equipped with collector rods of sufficient quantity and length to avoid lightning strokes in the sheet metal.

Down Conductors

Down conductors shall be selected in a manner such that there are several parallel current paths between the collector and the earthing system. The length of each down conductor is to be kept as short as possible.

Steel structures and steel columns of buildings may be used as down conductor, if the minimum sizes according to the standards are guaranteed. In each case the connections with the earthing system and collectors respectively must be visible and removable.

Starting from the corners of the structure involved, conductors should be distributed around the exterior as evenly as possible. They must be configured in such a way as to constitute the direct continuation of the collector. The minimum distance between conductors and doors, windows and other apertures must be 0.5 m.

@MECON Limited; all rights reserves

MECON LTD, Delhi

If not already connected with the collectors or with the internal potential equalisation, larger metal parts mounted in/on the building outer walls (e.g. frames of doors, ventilation louvers) shall be terminated on the down conductors.

The down conductor spacing should correspond with the relevant class of LPS :

Class of LPS	Typical Distances (m)
I	10
II	10
III	15
IV	20

All down conductors which are connected to the earthing system must be provided with an accessible isolating point for measuring purposes. For termination the grounding bars of grounding loops shall be used, preferably. No conductors are required for outdoor metal structures of adequate size.

Lightning Equipotential bonding

Equipotential bonding is simply the electrical interconnection of all appropriate metallic installations/parts, such that in the event of lightning currents flowing, no metallic part is at a different voltage potential with respect to one another. If the metallic parts are essentially at the same potential then the risk of sparking or flashover is nullified. Bonding can also be accomplished by the use of surge protective devices (SPDs) where the direct connection with bonding conductors is not suitable.

Bill of Material

The detailed bill of material for both external and internal LPS shall be provided for approval with technical specification of various lightning protection components.

It is to be noted that the lightning protection components are to be tested as per applicable IEC/EN 62561 standards for external LPS components and IEC 61643-11 for SPD's.

TESTS OF LIGHTNING PROTECTION SYSTEM

After erection of the earthing and lightning protection system all installations shall be tested in accordance with applicable regulations

The following tests shall be carried out, at least:

- Measures against corrosion protection and arising of chemical elements,
- Check of all connections,
- Measurements of earthing system resistance,

@MECON Limited; all rights reserves

MECON LTD, Delhi

- Measurements of lightning protection system conductivity,
- Check of mechanical details,
- Compliance with specifications.

The aim of the tests is to ensure the proper function of the complete scope. The measuring results and the locations of the measuring points have to be indicated in respective drawings as a basis for future measurements.

5.0 DOCUMENTATION

Complete documentation shall be provided for the design, construction, testing, maintenance and repair of the earthing and lightning protection systems and their components.

The documentation shall be in English language.

The following drawings/documents shall be submitted for approval within 3 weeks of award of contract.

a) Soil resistivity survey report
b) Technical data sheets
c) Earthing design calculations
d) Lightning protection design calculations
e) Earthing grid layouts
f) Construction drawings
g) Spare parts list
h) Operation and maintenance manuals
i) Test reports

The documents listed above shall be handed over for approval. Special attention has to be given to the fact, that documentation must be submitted with sufficient time allocated for approval prior to manufacturing / assembly. The documentation has to be prepared in accordance with the relevant ISO standards. The final documentation shall be delivered on paper in sufficient number and with exception of the signed protocols in electronic form, also. The type of the electronic files and the number of copies shall be agreed with the Client.

After commissioning & testing of earthing system contractor shall submit the following document to Client/MECON for As-Built status in hard copy (5 set) plus one soft copy.

a) Soil resistivity survey report
b) As built earthing grid layouts & earth electrode installations
c) Construction drawings

****

@MECON Limited; all rights reserves

MECON LTD, Delhi

REV: 0

EDITION: 3

TECHNICAL SPECIFICATION

FOR

INSTALLATION OF ELECTRICAL EQUIPMENT

DOCUMENT No. : MEC/05/E9/TS/14

Prepared & Issued by

ELECTRICAL SECTION
(Oil & Gas SBU)
MECON LIMITED
(A Govt. of India Undertaking)
13th& 15th Floor, North Tower, SCOPE MINAR,
Laxmi Nagar District Centre,
Delhi-110092 (India)

@MECON Limited; all rights reserves

MECON LTD, Delhi

INDEX

Sl. No.	Description	Page No
01.00	INTENT	4
02.00	CODES AND STANDARDS	4
03.00	ELECTRICAL EQUIPMENTS	5
03.01	SWITCHBOARD	6
03.02	BUSDUCT	9
03.03	TRANSFORMER	9
03.04	MOTORS	12
03.05	CABLES	14
03.06	LIGHTING	19
03.07	EARTHING	23
03.08	LIGHTNING PROTECTION	27
03.09	BATTERIES	27
03.10	NEUTRAL EARTHING RESISTOR	27
03.11	WELDING RECEPTACLES	27
03.12	PUSH BUTTON/CONTROL STATIONS	27
03.13	Misc. Items	27
03.14	LIST OF CONSTRUCTION EQUIPMENTS	28

Rev	Date	Prepared by	Checked by	Approved by
0	11.07.2025	Shifa Jindal	Saurabh Singh	Pankaj Shrivastava

© Copyright MECON Limited – All rights reserved.
THIS DOCUMENT IS THE SOLE PROPERTY OF MECON AND ISSUED FOR THE SPECIFIC PROJECT MENTIONED HEREIN. THIS IS NOT TO BE COPIED OR USED FOR ANY OTHER PROJECTS UNLESS EXPLICITLY PERMITTED BY MECON.

@MECON Limited; all rights reserves

AMENDMENT STATUS

(OLD NUMBER OF STANDARD: MEC/TS/05/E9/14)

Sl. No.	Clause / Paragraph / Annexure / Exhibit / Drawing Amended	Page No.	Revision	Date	By (Name)	Verified (Name)
1	Document Number replaced with New number as **MEC/05/E9/TS/14**	All	Rev 0/ Ed 3	11.07.2025		
2	Section re-name as Electrical Section (Oil & Gas SBU) Delhi	All	Rev 0/ Ed 3	11.07.2025		

MECON LTD, Delhi

@MECON Limited; all rights reserves

1.0 INTENT

The intent of this standard specification is to define the general requirements for design, manufacture, assembly and testing at manufacturer's works, packing, transportation and receipt at site with all materials and accessories of Electrical Equipment Installation.

2.0 CODES AND STANDARDS

The equipment shall comply with the requirements of latest revision of following standards issued by BIS (Bureau of Indian Standards), unless otherwise specified:

IS 5	Colours for ready mixed paints and enamels
SP30 (BIS)	National Electrical Code 2011
IS 816	Code of practice for use of metal arc welding for general construction in mild steel
IS 1239	Steel tubes, tubulars and other wrought steel fittings
IS 1255	Code of practice for installation and maintenance of power cables up to and including 33kV rating
IS 1364	Hexagon head bolts, screws and nuts of product grades A and B
IS 1573	Electroplated coatings of zinc on iron and steel
IS 2309	Code of practice for the protection of buildings and allied structures against lightning
IS 2629	Recommended practice for hot dip galvanizing of iron and steel
IS 2633	Methods for testing uniformity of coating of zinc coated articles
IS 3043	Code of practice for earthing
IS 3618	Phosphate treatment of iron and steel for protection against corrosion
IS 4759	Hot-dip zinc coatings on structural steel and other allied products
IS 6005	Code of practice for phosphating of iron and steel
IS 7689	Guide for the control of undesirable static electricity
IS 7816	Guide for testing Insulation resistance of rotating machines
IS 10028: Part 2	Code of practice for selection, installation and maintenance of Transformers: Part 2 - Installation
IS 10118: Part 3	Code of practice for selection, installation and maintenance of switchgear

@MECON Limited; all rights reserves

MECON LTD Delhi

and control gear: Part 3 -Installation

OISD-RP-110	Recommended practices on static electricity
OISD-STD-137	Inspection of Electrical Equipment
OISD-RP-147	Inspection and safe practices during electrical installations

In addition to the above it shall be ensured that the installation conforms to the requirements of the following as applicable:

1.1.1	Indian Electricity Act and Rules.
1.1.2	Regulations laid down by CEA/Electrical Inspectorate.
1.1.3	Regulations laid down by PESO/ DGMS (as applicable).
1.1.4	The petroleum rules (ministry of Industry Government of India).
1.1.5	Any other regulations laid down by central/state/local authorities and Insurance agencies.

In case of imported equipment standards of the country of origin shall be applicable if these standards are equivalent or stringent than the applicable Indian standards.
The equipment shall also confirm to the provisions of Indian Electricity rules and other statutory regulations currently in force in the country.
In case of any contradiction between various referred standards/ specifications/ data sheet and statutory regulations the following order of priority shall govern. However, the stringent of the below shall be followed.

- Statutory regulations.
- Schedule of Rate
- Scope of Work/ Job specification.
- Design Basis.
- Data sheets.
- Standard Specification.
- Codes and standards.

3.0 ELECTRICAL EQUIPMENTS:

Prior to start of installation of the electrical equipment contractor shall verify that equipment and complete materials have been received. Handling, shifting to required site location, installation, testing and commissioning of all electrical equipment shall be done by vendor/contractor with utmost care as per the scope matrix between the site installation contractor and respective equipment vendor attached in each tender. Manufacturer's instructions and the requirements given in their technical manuals shall be strictly adhered. The substation/switchgear room wherein the equipment shall be installed shall be

@MECON Limited; all rights reserves

kept clean, dry and free from all debris. Panel floor cut-outs not in immediate use shall be suitably covered to avoid any mishap. When handling the switchboard panels, care shall be taken to observe the correct lifting arrangements and to make sure that slings are attached to the manufacturer's designated lifting arrangements and to make sure that slings are attached to the manufacturer's designated lifting points. No parts shall be subjected to undue strains or sudden stresses which could cause damage to the equipment.

The lifting position mark indicated on packing casing shall be adhered to strictly, for keeping it in required vertical position.

Contractor shall check and report to the Purchaser about any damaged item and / or missing component for getting the same replaced as per specifications. During installation, all accessories and loose items shall also be inspected by the contractor before their assembly/mounting.

In case of any modifications/replacement of existing equipment or Tie-ins with existing Electrical systems, approvals shall be obtained from Purchaser before any work to be implemented. The tie-in and shutdown philosophy shall be developed by Contractor in coordination with production, operation and maintenance department. Detailed Task Risk Assessment (TRA) shall be developed by the Contractor for all modifications/replacement or tie-ins activities and shall be approved by all concerned authorities.

The following philosophies provide the frame work for modifications/ replacement or tie-in approach:

a) The existing facilities shall continue to operate normally. Contractor shall verify the requirements for modifications, replacement and interface or tie-in with existing / new electrical systems.

In general, a planned construction campaign shall be scheduled to facilitate the modifications/replacement or tie-in work. However, preparation for modifications/replacement or tie-in work can be proceed on an opportunistic or scheduled shutdown prior to the planned construction campaign in consultation with Purchaser. Associated shutdown co-ordination shall be carried out by the Contractor as per Purchaser procedure to complete the modifications/replacement of existing electrical equipment or tie-in hook up for all electrical systems.

3.1 SWITCHBOARD:

The term switchboard here includes all HV / MV/ LV switchboard panels, motor control centres, power and lighting distribution boards, UPS panels, ACDB, charger panels, DCDB etc. The switchboard panels shall be handled with care, avoiding any impact to the equipment. Dragging of the panels directly on floor shall be avoided. Roller bars may be used for shifting of panels: Use of a crane and trailer shall be made for handling of equipment. The switchboard panels shall be properly supported on the truck or trailer by means of ropes to avoid any chance of tilting. The switchboards shall be lifted after ensuring that panel supports, nuts and bolts are all intact and tightened. While lifting the panels in packed conditions utmost care shall be taken to avoid any damage to insulators, bushings, metering and protective equipment. The panels shall be preferably kept inside the packing cases till foundations are ready.

The switchboard panels shall be installed on prepared foundations or floor cutouts. Steel base channels shall be welded to inserts provided in floor slab. Cross members shall be provided at the

@MECON Limited; all rights reserves

junctions of each shipping section and other places as required. Alternatively, when the floor is being-laid, base channel frame of panels supplied by the vendor shall be grouted and levelled in cement concrete. It shall be ensured that the base plate level of HV switchboard shall match with the finished floor level. The foundation pockets and the grouted bolts shall be cured for a minimum period of 48hours.

The switchboard panels shall be taken out from the packed cases and shifted one by one to its proper place. All the panels shall be assembled, aligned and levelled: Alignment of panels shall be checked in both longitudinal and lateral directions. It shall be ensured that panel to panel coupling bolts, bus bar links etc. fit properly without any strain on any part. No new holes for jointing of the panels other than those recommended by the vendor shall be drilled. No gaps shall be left between the panels. The lifting, racking in and out operation of the breaker and all other motions shall be free from any obstruction.

The panels shall be checked for correct vertical position using pendulum weight and spirit levels. The switchboard panels shall be tack welded at suitable intervals at base channel.

After erection of switchboard panels, all uncovered portions of floor cutouts shall be covered with 6 mm thick removable chequered plates finished with floor level. The design of the chequered plates shall be such that the maximum allowable deflection is L/200 (where L is the span of the chequered plates in metres) for a live load of 500 kg. /sq. meters. Suitable lifting arrangements shall be provided for chequered plates: The chequered plates shall be painted with a coat of red oxide zinc chromate primer after proper surface preparation as per specifications. Where specified, panels cutouts provided for future use shall be filled with lean concrete.

After completion of erection of switchboards, all the cubicles, switchboard components such as switches, starters, C.T. and P.T. chambers, busbar chamber shall be cleaned and checked for tightness of all the components. Vacuum circuit breakers shall be checked for integrity of bottle seals. All loosely supplied items shall be fitted up. Bus bar sections or links shall be inserted and where specified, of high voltage equipment shall be insulated. Interconnection wiring between shipping sections shall be made by vendor. All the wiring connections shall also be checked. Phase sequence and polarity of PTs and CTs shall be checked. Contact resistance of all busbar joints and contactors shall be checked. Insulator shall be checked for any damage. All the starters, switches, contacts shall be cleaned with C.T.C. where required. All the moving parts shall be checked for easy and free movement. Hinges of panel doors shall be lubricated to give free and noise free movement. All openings shall be kept completely closed to avoid ingress of any foreign particles inside the panel.

Functional scheme verification of individual feeder shall be carried out and minor wiring modifications in the panel wiring, if required shall be done as per the directions of Purchaser. Special attention shall be paid to CT circuits polarity, wiring continuity and correctness in the protection as well as measurement circuits. Auto transfer scheme shall be simulated and verified. During the course of scheme verification tests, defective components if any shall be taken out, after bringing to the notice of Purchaser. The same shall be replaced by component supplied by Purchaser.

Where switchboard is damp or having a low IR value due to damaged insulators/ bushings/any

@MECON Limited; all rights reserves

other insulated parts, or any other reason, the entire switchboard shall be dried. up according to the instruction of the Purchaser for the I.R value to improve to a state level for commissioning. Care shall be taken to protect the surrounding insulation from direct local heating during the drying up process.

All the metering instruments, protective relays and other relays and contactors shall be tested as per manufacturer's recommendations and according to the instructions of the Purchaser. Protection relays shall be inserted and connected and settings adjusted as required by the Purchaser.

All moving parts, of closing/tripping mechanism, racking in and racking out mechanism, spouts and shutter closing mechanism shall be checked for proper operation. All the auxiliary contacts of breaker shall be checked-up, cleaned and contact pressure measured.

All the control wiring, PTs, bushings, bus bars, other live parts of switchgear, incoming and outgoing cables shall be meggered.

Electrical simulation tests shall be carried out for all the protective, alarm and annunciation relays and external interfaces to ascertain proper functioning.

Safety insulation mats of approved make and of required voltage grade shall be provided in the sub-Station.

Pre-Commissioning Checklist:

Before commissioning any switchboard, following points shall be checked and ensured for safe energizing of the switchboard:

That the installation of equipment to be commissioned is complete in all respects with its auxiliaries and all other mounting including earthing. Openings in floor within and outside panels have been sealed off. All cover and door gaskets are intact to make the enclosure vermin proof.

a) All the metering instruments have been checked and found in working order. Indicating lamps are healthy and are in correct position. All power and control fuses are of proper rating.

b) That the polarity test and ratio test of all the P.T.s and C.T.s is complete and phase sequence of C.T.s conforms to the correct vector group connections. Wiring continuity and correctness are ensured in the protection and measurement circuits. Polarity of D.C. supply for all the circuits is correct.

c) That the high voltage tests of incoming and outgoing cables have been conducted and results are satisfactory.

d) That all the protective relays including both conventional and microprocessor based numerical relays have been tested for secondary injection tests. (Primary injection tests shall be carried out for differential protection, Restricted Earth fault protection and thermal overload at full / reduced current to ensure correctness of complete wiring). Relay settings, status indications, fault annunciations, data logging, display of switchboard SLDs shall be verified from MMI in case the same is provided.

e) That I.R. Value has been recorded for bus bars, circuit breaker, incoming and outgoing cables, control wiring and potential transformers. Where required joint resistance of bus bars have been recorded and found to be satisfactory. All the surroundings and panels have been cleaned and temporary earth

@MECON Limited; all rights reserves

leads have been removed. Timing & CRM test for breakers to be conducted. Hi-Pot IR & PI wherever applicable to be done & recorded

3.2 BUSDUCT:

The bus ducts as per issued drawings will be supplied in parts and all the parts shall be assembled and the bus bar connections shall be made at site. The insulators in bus ducts shall be inspected for any possible damage during transit and the defective ones shall be replaced. The insulators shall be cleaned. Contact surface of bus bars, bus bar bolts and nuts shall be thoroughly cleaned. Petroleum jelly shall then be applied and bolted connection made. The bus duct enclosure shall be checked for earth continuity and then earthed at two places. The bus duct shall be properly supported between switchgear and transformer. The opening in the wall where the bus duct enters the switchgear room shall be completely sealed to avoid rain water entry. Expansion joints, flexible connections etc. supplied by the manufacturer of the bus duct shall be properly connected. The bus duct levelling shall be checked with spirit level and pendulum weight.

3.3 TRANSFORMER:

Transformers on receipt at site shall be unloaded by means of crane or lifting devices of adequate capacity. All lifting lugs shall be used to avoid unbalanced lifting and undue stresses on lugs. Lifting lugs if any provided for partial lifting (e.g., for active part, conservator) etc. shall not be used for lifting complete transformer. Parts other than those identified for lifting of the transformer shall not be used for lifting. While slinging, care shall be taken to avoid slings touching other parts.

Before lifting transformer, it shall be ensured that all cover bolts are tightened fully. In case when it is necessary to use jacks for lifting, projections provided for the purposes of jacking shall be used.Liftingjacksshallnotbeusedunderthevalvesorradiatortubes.Fortransporting transformers from stores to site, the transformers shall be loaded on a suitable capacity truck or trailer. The transformers shall be properly supported by steel ropes and stoppers on the trailer to avoid tilting of the transformers in transit due to jerks and vibrations. At no instance the transformer shall be kept on bare ground. Where it is not possible to unload the transformer directly on a foundation, it shall be unloaded on a properly built wooden sleeper platform. A transformer shall never be left without putting stoppers to the wheels.

Transformer shall be examined, for any sign of damage in transit. Particular attention shall be given to the following in this regard:

a) Dents on tank wall or cooling tubes.

b) Damage to protruding parts like valves, sight glass etc.

c) Loosening of bolts due to vibration in transit.

d) Cracked or broken bushings.

e) Oil leakage particularly along welds.

If anything, adverse is noted the same shall be brought to the notice of Purchaser.

Contractor shall examine the transformer base, oil pit, tire walls and foundations laid by the civil

@MECON Limited; all rights reserves

contractor. It shall be ensured that oil spills cannot propagate along cable trenches. Any discrepancy noted will be brought to the notice of Purchaser. Transformers shall be placed on channels or rails over concrete foundations. The transformers shall be levelled, aligned and checked for free movement on the channels or rails. Stoppers shall be provided to the transformers immediately to prevent any movement. Normally transformers upto 1000kVA rating shall be received duly fitted with radiator tubes, conservator tanks, valves, wheels and other accessories. While the transformers of above 1000kVA rating may be supplied with loose accessories. All the accessories like radiators, cooling fans, valves, conservator tanks, explosion vent pipe, bushings and other devices which are supplied in different packages shall be checked for any transit damage and cleaned thoroughly before fixing on the transformer. All loosely supplied parts shall be assembled as per manufacturer's instruction manuals/ drawings and documents. All the connections for C.T.s bushings and other wiring shall be checked for tightness and correctness before replacing the lid or tightening all the bolts.

Topping of transformer with oil:

Before topping up with oil, transformer shall be fitted with all accessories such as valves, gauges, thermometers etc. Oil samples shall be taken from each drum and tested for determination of dielectric strength. Any sign of leakage of the barrel or of its having been opened shall be recorded and reported. It is necessary to filter the oil before the transformers are filled. It shall be ensured in oil filling operation that no air pockets are left in the tank and that no dust or moisture enters the oil. All air vents shall be opened. Oil shall be filled through a streamline oil filter using metal hose. To prevent aeration or the oil, the transformer tank shall be filled through the bottom drain valve. In a transformer with conservator tank, the rate of oil flow shall be reduced when the level is almost upto the bottom of the main cover to prevent internal pressure from rupturing the pressure relief-pipe diaphragm. Sufficient time shall be allowed for the oil to permeate the transformers and also for the locked -up air bubbles to escape. Any air accumulation in the buchholz relay shall be released.

Transformer Oil

a) Sample of oil from the transformer shall be taken from the bottom of the tank.

b) Testing of Oil:

For dielectric test, the oil shall be tested as described in IS 335. The oil shall also be tested for acidity in accordance with the methods prescribed.

Drying out of the transformers, if required, shall be carried out and record maintained in accordance with IS 10028. Normally a streamline filter shall be used for drying-up. I.R. value versus time of both windings shall be recorded during the drying-up process.

Precautions when drying

a) The maximum sustained temperature to which transformer oil may be subjected shall be limited to80^0C.

b) The transformer shall be carefully monitored throughout the drying out process and all observations shall be carefully recorded.

@MECON Limited; all rights reserves

c) Drying out shall be continued so that the insulation resistance as prescribed in the standard code of practice is attained and the value remains constant for more than 12 hours. However, a minimum number of cycles shall be done for each transformer as found necessary by the Purchaser. Generally, a megger reading of 2 megohms / kV at 60^0 C temp with a 5kV Megger may be a rough indication for stopping the dehydration.

The following work on transformers shall be performed by the vendor if specifically called for:

a) Before finally commissioning the transformer, it may sometimes be desired to run it for a few hours on short-circuit, applying a low voltage, approximately equal to the impedance voltage of the transformer. During this process, regular readings of the insulation resistance of the winding to earth and winding to winding and temperature against time shall be recorded.

b) Testing of radiator tubes for any leakage and rectifying these by welding/brazing.

Pre-commissioning Checklist:

Before commissioning of any transformer, the following points shall be checked for safe energisation of the transformer:

a) That all the accessories have been fixed properly and transformer body and neutral are properly earthed. The transformer dehydration is over and results are satisfactory and approved by the Purchaser. In case transformers are idle for more than one month after dehydration, transformer oil has been given at least two circulations.

b) That the oil level, in the transformer conservator tank and all the bushings is upto the marked point and the oil has been tested for dielectric strength and acidity.

c) That the silica gel is in reactivated condition. The breather pipe is clear from any blocking and contains oil upto the proper level.

d) The explosion vent diaphragm does not have any dents. Accumulation of any oil and air had been released.

e) That the operation of off-load and on-load tap changers on all the tap positions is satisfactory. The mechanical parts of the on-load tap changer are lubricated. Motor IR value has taken and found satisfactory. Tap position mechanical indicator on the transformer and tap position indication meter on the control panel are reading the same tap positions. Tap changer limit switches are operating satisfactorily on the maximum and minimum tap positions. On-load tap changer contact pressure and resistance is as per manufacturers recommendations. Oil level of tap changer tank is upto the required level and oil has been tested for dielectric strength. The tap setting on which the off-load tap switch is locked shall be recorded. Generally, the off-load tap switch shall be kept on nominal tap.

f) That the buchholz relay has been tested and checked up for any friction in the movement, and floats are free, all the other protective relays, alarm and annunciation relays have been tested.

@MECON Limited; all rights reserves

g) That all the metering equipment have been tested and polarity test of P. T's and transformer winding is satisfactory. Phase sequence and connections have been checked for proper vector group.

h) That the ratio test and winding resistance on all the tap positions is satisfactory.

i) That gaps of arcing horns for the bushings where provided are in order and earth connections for the surge diverters have been checked

j) That the winding and oil temperature thermometer pockets contain oil and the winding and oil temperature settings on dial gauges are in order.

k) That the transformers fitted with fans for forced air cooling have been checked up for automatic starting and stopping of the fans and air is placement as been verified (If applicable).

l) That the simulation tests for all external interface connection alarm, annunciation and trip circuits have been checked and are in order.

m) That the insulation resistance of all the control circuits and IR value of the transformer windings and all the incoming and outgoing cables have been checked.

n) That all the valves in the cooling system and valve between the buchholz relay and the conservator tanks are in open position.

o) That the setting of all the protective relays is at the desired value and D.C. Trip supply is healthy.

Observations after Commissioning

After switching on the transformer, the following points shall be observed and recorded.

a) The inrush magnetizing current and no-load current.

b) Alarm, if any, or if any relay flag has operated.

c) Voltage and current on all the three phases.

d) Transformer hum or abnormal noise.

e) Circulation of oil and leakages.

f) Record current, voltage, cooling air temperature, winding temperature and oil temperature readings, hourly for 24hours.

g) Cable end boxes, for any over-heating.

3.4 HV and MV MOTORS:

All the motors generally would be erected by the mechanical contractor.

Contractor shall keep the motor space heater energized as per the directions of Purchaser. Contractor shall measure the insulation resistance of motor windings. Insulation resistance of the motors shall be measured between the

@MECON Limited; all rights reserves

winding of the machine and its frame by means of a 500 / 1000V Meggar in case of 415V motors. A minimum value of 1 megohm for 415V motors shall be considered a safe value. In case of lower I.R. Value, the insulation value shall be improved by any of the following methods as directed by the Purchaser.

a) Blowing hot air from external source.

b) Putting the motor in oven:

c) Placing heaters or lamps around and inside after making suitable guarding and covering arrangements so as to conserve the heat.

In case the insulation is low, the following method of drying has to be adopted, after consultation with Purchaser. During drying the temperature rise of winding shall not exceed the permissible value for the class of insulation used:

a) By locking the motor so that it cannot rotate and then applying such a low voltage to the stator terminals so as to pass full load current in the stator keeping the stator winding temperature below 90° C. In this case a close watch shall be kept for any possible overheating and I.R. Values vs. temperature shall be plotted and heating continued till I.R. value becomes steady.

b) By blasting hot air from external source, Maximum temperature of winding while drying shall be 70° C to 80°C (thermometer) or 90° C to 95° C by resistance method. Heating shall be done slowly first till steady temperature of winding is reached after 4 to 5 hours, and for large machines after 10 hours. A record has to be kept for drying process, with half an hour reading and, till steady temperature is reached. In case it is essential, the drying process can be supplemented by blower.

It shall be sure that the motor leads are correctly connected in the terminal box, as indicated in the 'Name Plate'. The covers of all terminal boxes shall be properly fixed, the gaskets intact. The control circuit shall be tested for proper functioning as per circuit diagram.

In case of synchronous machines, slip rings and brush gear shall be polished and brushes shall be fixed in their holders with clearance and pressure as recommended by the manufacturers.

Before commissioning, the ventilation and cooling system of the motor must be inspected. In case of motor with forced ventilation the air inlet shall be examined to ensure that it is free from moisture and any foreign material. It shall also be ensured that recommended flow and pressure of air is available to produce the required cooling effect.

The motor control gear shall also be carefully examined, the over-load settings may be reduced or time lags bypassed from protective gear to ensure rapid tripping of switchgear in event of faults. The direction of rotation of a new motor specially of large capacity, and phase sequence of supply shall be kept in view while joining and connecting to the motor terminals.

Finally, the motor shall be started on no-load after decoupling, and shall be allowed to run for a minimum period of 4 hours, or for a time as instructed by Purchaser. Attention shall be given to the proper running of the bearings, vibration or unusual noises if any. Voltage, starting current, no-load current, stator

@MECON Limited; all rights reserves

winding and bearing temperature & vibrations shall be recorded after every 1 hour during this test. Direction of rotation shall be checked and recorded. Normally the motors run in clockwise direction as viewed from the driving end with reference to the phase sequence R,Y,B.

After switching off the motor, the insulation resistance of the motor shall be recorded under hot and cold conditions.

If the no load test run is found satisfactory, the motor shall be allowed to run for 8 hours and all readings shall be recorded.

The following work on motors, may be performed by the contractor if specifically called for.

a) The proper level of bearing oil has to be checked. The condition of grease in bearings shall be checked and in case it is necessary, complete replacement of bearing with specified grade of grease after proper cleaning of the bearing shall have to be done. Wherever external greasing facility exists, the condition of grease may be checked by pumping some new grease of specified grade at start. If the grease coming out is deteriorated grease shall be replaced.

b) All the motors, motor exciter set and induction generators directly coupled or coupled through reduction gears shall be checked for abnormal vibration, if any Large rated HV motors with journal type bearings are liable to get damaged from shock, rough handling during transit. Any minor defect in a race or roller may give rise to considerable amount of vibration and noise. Contractor shall check and bring to the attention of Purchaser any defect noticed in this regard.

c) Due care shall be taken to avoid any damage to bearing insulation wherever provided.

3.5 CABLE INSTALLATION

General

Cable installation shall include power, control and lighting cables. These shall be laid in trenches/cable trays as detailed in the power layout drawings. Cable routing given on the power layout drawings shall be checked in the field so as to avoid interference with other services such piping, instrumentation, civil, structural, mechanical etc. Any change in routing shall be done to suit the field conditions suitably interfacing with other services wherever deemed necessary, after obtaining approval of Purchaser.

High voltage, medium voltage power and control cables shall be separated from each other by adequate spacing or by running through independent pipes, trenches or cables trays, as shown on power layout drawings/installation details. Details of cable routes and cable spacings not shown in detail drawing shall be determined by the Contractor and approved by the Purchaser.

When single core cables are laid in flat formation, the individual cable fixing clamps and spacers shall be of non-magnetic material. As a general practice, the sheath of single core cables shall be earthed at one point to keep sheath at earth potential unless otherwise stated. Single core cables, when laid in trefoil formation shall be braced by suitable clamps at a distance, not exceeding 3 meters along the cable routing.

@MECON Limited; all rights reserves

If straight through joints are required to be provided on single core cables, amour shall be broken at joints as per Supplier's recommendations. For single core cables, armour shall be earthed at one end for the cable run length as per Supplier's recommendation.

Minimum spacing of 300 mm between power, control cables and Telephone, Communication, Fire alarm cables shall be maintained.
The lengths indicated in the cables schedule are only approximate. The Contractor shall ascertain the exact length of cable for a particular feeder by measuring at site. All cable routes shall be carefully measured. Before the start of cable laying, the Contractor shall prepare cable drum schedule and get that approved by Purchaser to minimize/avoid straight though joints and then the cables cut to the required lengths, leaving sufficient lengths for the terminations of the cable at both ends. The various cable lengths cut from the cable reels shall be carefully selected to prevent undue wastage of cables. Extra loop length shall be given for feeder cables where required as per the directions of Purchaser to meet contingencies.

Cables shall be laid in directly buried trench or in RCC trench (underground trench) or in cable tray along pipe sleepers or in overhead trays as shown on power layout drawings.

Overhead trays shall be installed 2700 mm (minimum) above grade level. At road crossings overhead trays shall be installed at 7000 mm (minimum) above level or cables shall be routed cable tray culvert/Electrical Road crossings as per power layout drawings.

Sufficient care shall be taken while laying cables to avoid formation of twist, sharp bend etc. in order to avoid mechanical injuries to cables. Rollers shall be used for pulling of cables.

Cable installation shall provide minimum cable bending radii as recommended by cable Supplier.

Cables shall be neatly arranged in the trenches/trays in such a manner that criss-crossing is avoided and final take off to the motor/switchgear is facilitated. Arrangement of cables within the trenches/trays shall be in line with power layout drawings. Cable routing between cable trench and equipment/motors shall be taken through GI pipe sleeves of adequate size. Pipe sleeves shall be laid at an angle of maximum 45 to the trench wall. Bending radii of pipes shall not be less than 8D. It is to be ensured that both the ends of GI pipe sleeves shall be sealed with approved whether proof sealing plastic compound after cabling. In places where it is not possible, cables shall be laid in smaller branch trenches.

All cables shall be identified close to their termination point by cable tag numbers as per cable schedule. Cable tag numbers shall be punched on aluminium straps (2mm thick, 20 mm wide and of enough length) securely fastened to the cable and wrapped around it.

Each underground cable shall be provided with cable tags of lead securely fastened every 30 m of its underground length with at least one tag at each end before the cable enters/leaves the ground. In unpaved areas, cable trenches shall be identified by means of cable markers as per installation drawing. These cable markers shall be placed at location of changes in the direction of cables and at intervals of not more than 20 m and also at cable straight through joint locations.

All temporary ends of cables must be protected against dirt and moisture to prevent damage to the insulation. For this purpose, ends of cables shall be taped with an approved PVC end cap or rubber

@MECON Limited; all rights reserves

insulating tape.

Each row of cables shall be laid in place and before covering with sand. All wall opening/pipe sleeves shall be effectively sealed after installation of cables to avoid seepage of water inside building /lined trench. Every cable shall be given an insulation test in presence of Purchaser before filling the cable trench with sand. Any cable which is found defective shall be replaced.

Where cables pass through foundation walls, the necessary openings shall be provided in advance for the same by another agency. However, should it become necessary to cut holes in existing structures for example floor slab etc., the Contractor shall determine their location and obtain approval of the Purchaser before carrying out the same.

Cables for road crossings shall be taken through ERC (Electrical Road Crossing) as shown in the power layout drawings.

At road crossing and other places where cables enter pipe sleeves adequate bed of sand shall be given so that the cables do not slack and get damaged by pipe ends.

Wherever cable trench crosses storm water, waste water channel/drain, cables shall be taken through PVC/RCC pipes. Where cables are required to cross drains of depth more than 1200 mm, cables shall be taken over the drain on cable trays supported suitably using ISMC 150/200 sections.

Ends of cables leaving trench shall be coiled & capped and provided with protective cover till such time the final termination to the equipment is completed.

Cables laid direct inground

Cables shall be laid underground in excavated cable trenches where specified in cable layout drawings. Trenches shall be of sufficient depth and width for accommodation of all cables. Cables shall be properly spaced and arranged with a view of heat dissipation and economy of design. Maximum number of cable layers in trench shall be preferably limited to 5 layers.

Minimum depth of cable trench shall be 750 mm for medium voltage and 900 mm for H.V. Cables. The depth and the width of the trench shall vary depending upon the number of layers of cables

Cables shall be laid in buried trenches at depth as shown in the power layout drawings. It is to be insured by the Contractor that the bottom of buried trenches shall be cleared of all rocks, stones and sharp objects before cables are placed. The trench bottom shall be filled with a layer of sand. This sand shall be levelled and cables laid over it. These cables shall be covered with 150 mm of sand on top of the largest diameter cable and sand shall be lightly compacted. A flat protective covering of 75 mm thick second-class red bricks shall than be laid and the reminder of the trench shall then be back – filled with soil, rammed and levelled.

Cables laid in concrete trench

Cables shall be laid in 3 or 4 tiers in concrete trench as shown on power layout drawings. Concrete cables trenches shall be filled with sand in hazardous area to avoid accumulation of hazardous gases and oil. RCC covers of trenches shall be effectively sealed to avoid ingress of chemical and oil in process area. Removal of concrete covers where required for the purpose of cable laying and

@MECON Limited; all rights reserves

reinstating them in their proper position after cables are laid shall be done by Contractor.

All wall opening /pipe sleeves shall be effectively sealed after installation of cables to avoid seepage of water.

Above ground cables

a) Cables installed above grade shall be run in cable trays, clamped on walls, ceiling or structures and shall be run parallel or at right angles to beams, walls or columns. Cable routing shall be planned to be away from heat sources such as hot piping, gas, water, oil drainage piping, air- conditioning duct etc. Each cable tray shall contain only one layer of cables as far as possible for power cables. However, control cables may be laid in double layer in the cable trays.

b) Individual cable or small group of cables (upto 3 to 4 cables) which run along structures/walls etc. shall be clamped by means of 16 SWG GI saddles on 25 x 6 mm saddle bars. Alternatively small group of cables can be taken through 100/150 mm slotted channel tray/ISMC100.

Cables shall be supported so as to prevent sagging. In general, distance between supports shall be approximately 300 mm for cables upto 25 diameters and maximum 450 mm for cables larger than 25 mm dia. To prevent the sagging of cables.

c) Cable laid on supporting angle in cable trenches, structures, columns and vertical run of cable trays shall be suitably clamped by means of G.I. saddles/clams, whereas cables in horizontal run of cable trays shall be tied by means of nylon cords. Distance between supporting angles shall not exceed 600mm.

d) All cable trays (other than galvanized trays) and supporting steel structures shall be painted before laying of cables. The under surfaces shall be properly degreased, derusted, descaled and cleaned. The painting shall be done with one coat of red oxide zinc chromate primer. Final painting shall be done with two coats of approved bituminous aluminum paint unless otherwise specified.

e) Where cables rise from trench to motor, lighting panel, control station, junction box etc., they shall be taken in GI pipe for mechanical protection upto a minimum of 300 mm above grade. Cable ends shall be carefully pulled through conduit to prevent damage to cable.

f) All G.I. Pipes shall be laid as per layout drawings and site conditions. Before fabrication of various profiles of pipes by hydraulically operated bending machine (which is to be arranged by the Contractor) all the burrs from the pipes shall be removed. GI Pipes having bends shall be buried in soil/concrete in such a way that the bend shall be totally concealed. For G.I. pipes buried in soil, bitumen coating shall be applied on the buried lengths. Installation of G.I. pipes shall be undertaken well before paving is completed and necessary co-ordination with paving agency shall be the responsibility of Contractor.

Following guide shall be used for sizing of G.I. pipe.

i) 1 cable in a pipe - 53 % of pipe cross-sectional area occupied by cables.
ii) 2 cables in a pipe - 31 % of pipe cross-sectional area occupied by cables.
iii) 3 cables in a pipe - 43 % of pipe cross-sectional area occupied by cables.

@MECON Limited; all rights reserves

iv) 4 and above cables in a pipe - 40 % of pipe cross-sectional area occupied by cables.

After the cables are installed and all testing is complete, conduit ends above grade shall be plugged with a suitable weatherproof plastic compound / bitumen / suitable sealing compound. Alternatively, rubber bushes shall be employed for the purpose of sealing

Terminations

a) All HV and MV cables shall be terminated at the equipment by means of single/double compression type cables glands as specified suitable for the cable size. They shall have a screwed nipple with conduit electrical threads and check nut. The cables shall be identified close to their termination points at both the ends of cable (cable numbers shall be punched on aluminium strips 2mm thick and securely fastened to the cables wrapped around it) and also along the route at recommended intervals, by cable tag numbers.

All cable entries for outdoor termination shall be preferably through bottom. Outdoor cable termination through top of equipment shall not be permitted.

b) Power cables cores wherever colour coding is not available shall be identified with red, yellow and blue PVC tapes. Where copper to aluminum connections are made, necessary bimetallic washers shall be used.

c) In case of control cables, all cores shall be identified at both ends by their terminal numbers by means of PVC ferrules suitable for core size. Wire numbers shall be as per schematic/wiring/inter-connection diagram. All unused spare cores of control, cables shall be neatly bunched and ferruled with cable tag at both ends, for future use.

For trip circuit identification additional red ferules shall be used only in the particular cores of control cables at the termination points in the Switchgear/Control panels and Control Switches.

d) Contractor shall drill holes for fixing glands wherever necessary. Gland plate shall be of non-magnetic material/aluminium sheet in case of single core cables. All unused cable entries on equipment/panels shall be plugged/sealed.

e) The cable shall be terminated at electrical equipment /switchboards through glands of proper size. The individual cores shall then be dressed and taken along the cables ways or shall be fixed to the panels with polyethylene straps. The cable glanding shall be done as per Supplier's instructions. Cable armour shall not be exposed after termination is complete. In case of termination of cables at the bottom of a panel over a cable trench having no access from the bottom close fit holes shall be drilled in the gland plate for all the cables in one line, and then gland plate shall be split in two parts along the centre line of holes. After fixing bottom plate, uncovered cable holes/gaps shall be sealed with cold setting compound.

f) Crimping of lugs to cable leads shall be done by hand crimping/hydraulically operated tool as per requirement. Insulation of the leads shall be removed before crimping. Conductor surface shall be cleaned and shall not be left open. Suitable conducting jelly shall be applied on the conductor lead. Lugs shall enclose all strands of cable core. Cutting of stands shall not be allowed.

@MECON Limited; all rights reserves

g) HV cables shall be terminated with heat shrinkable termination kits, indoor or outdoor type as specified by approved HV cable jointers. Supplier's instructions shall be followed for applying heat shrinkable termination kits.

h) The Contractor shall bring to the notice of Purchaser any mismatch in cable glands, lugs provided with the equipment vis-à-vis to the cable size indicated in cable schedule for taking corrective action.

i) The cable joints in power and control cables shall be avoided as far as possible. In case a joint is unavoidable, the following shall be insured:

i) The number of joints shall be restricted to minimum as far as possible.

ii) The location of joints shall be identified with permanents markers.

iii) No joints shall be allowed in hazardous areas without the approval of Purchaser.

iv) No joints will be allowed in the Cable seller.

The jointing and termination of medium voltage power cables shall be carried out by trained personnel only. Jointing and termination of high voltage cables shall be done by skilled and experienced jointer duly approved by Purchaser. Only type tested termination kits of approved make shall be used.

j) No unauthorized repairs, modifications shall be carried out on the hazardous area equipment terminal boxes and junction boxes. Damaged enclosures of hazardous area equipment shall be brought to the notice of Purchaser by Contractor. After termination is complete, all the bolts, nuts, hard wares of terminal box shall be properly placed in its position and tightened.

k) Where required, cable sealing boxes intended to be used with the apparatus shall be filled with solid setting type bituminous compound unless otherwise specified

3.6 LIGHTING INSTALLATION

General

The lighting fixtures in the plant shall be fed from lighting and small power distribution board. All outdoor lighting shall be group controlled manually or through photoelectric synchronous timer. Lighting wiring between distribution boards and lighting fixtures shall be done with 3-core (phase, neutral and earth) Cu/XLPE/SWA/PVC cable for plant areas and substation building. Wiring in the other building shall be done by means of 3-core Cu/PVC cables, or PVC insulated copper conductor wires in conduit/Metsec channel as specified. All joints of conductors in Switch boards/JBs Fittings shall be made only by means of approved mechanical connectors (nylon/PVC connectors). Bare twisted joints shall not be permitted anywhere in the wiring system.

The lighting and small power layouts furnished by Purchaser will indicate approximate locations of lighting fixtures. The Contractor shall determine, with approval of Purchaser, the exact locations of each

@MECON Limited; all rights reserves

fixture in order to avoid interference with other services such as piping, instrumentation, civil, structural, mechanical etc and also with a view to obtain as much uniform illumination as practicable, and to avoid objectionable shadows. Conduits shall be laid out by the Contractor to suit field conditions suitably interfacing with other services and as per directions of the Purchaser.

On walkways, platforms and other outdoor area, lighting fixtures shall be located nearer to landing of stairs or ladders, gauges, flowmeters, panel boards and other equipment to provide proper illumination.

The minimum height of any lighting fixture shall be preferably not less than 2.5 meters above the floor level.

All outdoor cable terminations to outdoor junction boxes, panels, socket outlets etc. shall be through bottom or from side. Top entries for cables shall be avoided to avoid water entry. All cable glands for outdoor terminations shall be double compression type and the gland shall be covered with PVC or rubber boot shroud. All unused cable entries shall be plugged with suitable blanking plugs.

Mounting height of equipment shall be as under:-

Top of Switch Box	:	1200 mm from FFL (Finished floor level) Bottom of
Lighting/Power Panel	:	1500mm from FL
5/15Amp. Receptacle	:	300mm from FFL unless otherwise specified (1200 mm for process areas and industrial sheds)
Lighting fixture	:	As indicated in lay outdrawing
Exhaust fan	:	In the cutout provided / as indicated in Layout drawings.

Fixtures shall be firmly supported from the structures. Support clamps etc. may be bolted or welded to the existing steel work or metal inserts. In case of concrete structures, where metal inserts are not available, fixtures shall be suspended from concrete surfaces with the help of anchor fasteners. In such cases special care shall be taken to see that anchoring is firm. In places where ceiling fans are provided, lighting fixtures shall be suspended below the level of fan to avoid shadow effect.

Circuit cables in a group shall be cleated to structure by using galvanised strip clamps or cable run in cable trays wherever trays are available. Spacers and cleats shall be of required size to accommodate the cables. All hardware shall be galvanised. Underground lighting cables (in paved areas) shall be taken in suitable G.I. sleeves buried at a minimum depth of 300 mm from FFL. GI pipe sleeves shall be extended to 300 mm above FFL. Exact termination/layout of G.I. pipes (for protection of cables) shall be decided at site as per site convenience in consultation with Purchaser.

Wiring for all outlet sockets shall be done with 3 cores of equal sizes for phase, neutral and earth. The terminals of switch sockets shall be suitable to receive the size of wire specified.

All lighting fixtures shall be provided with terminal block with required terminals suitable for connection of wire upto 2.5sq.mm copper conductor.

The cable shall be straightened after unwinding it from the drum. All cables be clamped/laid in straight run

@MECON Limited; all rights reserves

without any sag and kink.

For location where fan points are shown, fan hooks with junction box shall be provided during concreting. Where fan hooks and J.Bs. are provided separately JB shall be located within a distance of 300mm from hook for mounting of ceiling rose.

Industrial type plug sockets with 20A switch or rating as specified shall be provided at a height of 500mm from FFL for window AC units. Socket outlets and plugs for installation in MCC room, DG room, etc. shall be of industrial metal clad type.

Wiring for exhaust fans shall be terminated in receptacles as specified in layout drawing and the connection from receptacle to the exhaust fan shall be by means of a flexible cord equivalent in size to the main run of wires. Switch for exhaust fan shall be located in a separate switch board along with other switches

Conduit System

Surface or concealed conduit system of wiring shall be adopted, as specified in the drawings. Required number of pull boxes shall be used at intervals to facilitate easy drawing of wires. Separate conduit shall be run for lighting and power circuits. Further, conduits for Normal lighting/Emergency lighting/DC critical lighting shall be separate. Conduit layout shall be decided at site as per site conditions. Drop conduits for switch boards shall be decided by Contractor as per wall locations shown in Architectural drawings. All exposed run of conduits on surface, shall be vertical or horizontal.

Only threaded type conduit fittings shall be used for metallic conduit system. Pin grip type or clamp type fittings are not acceptable. Conduit ends shall be free from sharp edges or burrs. The ends of all conduits shall be reamed and neatly bushed.

Conduit shall be of minimum 25mm dia. Maximum number of wires permissible in a conduit shall be seven for wire size of 2.5 sq mm.

The exposed outer surface of the conduit pipes, including all accessories forming part of the conduit system, shall be adequately protected against rusting. In all cases, bare threaded portion of conduit pipe shall not be exposed unless such bare threaded portion is treated with anti-corrosive preservative or covered with approved plastic compound.

Conduit connection to outlet boxes shall be by means of screwed hubs or check nuts on either side. Where concealed wiring is done, junction boxes (65mm deep) shall be used so as to rest on shuttering properly. All conduit connections shall be properly screwed and Junction box covers shall be properly fitted so as to avoid entry of concrete slurry.

Where concealed wiring is to be adopted, conduits shall be laid in time before concreting of the slab. Pull wire (GI or steel) shall be provided inside conduit for the ease of wire pulling. The Contractor shall coordinate his work with other agencies involved in the civil works in such a way, that the work of the other agencies is not hampered or delayed. Vertical conduit runs shall be made in wall before plastering is done so as to avoid chasing. Where chases are made for conduit run Contractor shall fill these chases or any other openings made by them after completing the work and patch the surface. During

@MECON Limited; all rights reserves

installation, care shall be taken to see that proper covers are provided to prevent rusting of conduits. Locations of all point outlets, junction boxes shall be marked with brick powder or sand so that these are easily identified after shuttering removal. As built conduit layout drawing shall be submitted by Contractor after completion of the work.

All junction boxes, bends and other accessories shall be of the same material as that of conduit and shall have the same protective coatings.

After erection, the entire conduit system shall be tested, for mechanical and electrical continuity and shall be permanently connected to earth by means of approved type of earthing clamps.

Hazardous Area Installation

Wiring in hazardous area shall be done by using minimum 2.5mm^2 copper conductor armoured cable. Circuit wiring feeding hazardous areas shall be controlled by two pole switches/MCBs (for phase as well as neutral isolation).

Correct type of lighting equipment (fixtures and JBs) with regard to hazardous protection as specified in the drawing shall be installed for the areas classified as Zone 1, Zone 2etc.

The terminations in the junction boxes and the lighting fittings shall be done avoiding possibility of loose connections due to vibrations. After the terminations are made the cover of the junction boxes and the lighting fittings shall be closed properly with all bolts and hard wares in correct position, retaining its explosion and weather protections. In fixtures having double cable entries, both the entries shall be used for looping in and looping out connection, thus minimising the use of a separate junction box. Wherever separate control gear boxes (C.G. box) are provided looping in and looping out connections shall be through CG box, thus avoiding the use of a additional junction box. All unused cable entries shall be sealed with suitable plugs.

Circuit cables shall be firmly cleated in a group along columns/ beam/ladders/side channels/platform using 1.6mm thick GI saddles on 25x3 mm GI saddle bar at intervals of 400mm to 500mm for straight run and on either side close to bending and at both termination ends as per the directions of Purchaser. Where required, 3 or more of cables may be taken in slotted channel tray after obtaining approval of the Purchaser. Cables shall not be routed along hand rails.

Where fire proofing column/structures are encountered, all cabling shall be taken in GI pipes of required size and both ends shall be sealed, well before fire proofing is done. Similarly, equipment such as lighting fixture, control gear box, lighting/ power panels, field call stations, junction boxes etc. shall be installed on suitable steel mounting frame/distance bracket, thereby avoiding direct contact with the concrete used for fire proofing.

Cable glands for terminating cable on flameproof equipment shall be of double compression FLP type. Any material/equipment specified to be supplied by Contractor for installation in hazardous areas, shall be tested by CMRI and duly approved by PESO Nagpur or DGMS Dhanbad or any other applicable statutory authority. All indigenous FLP equipment shall also have valid BIS license as required by statutory authorities.

High Mast Lighting

@MECON Limited; all rights reserves

The high masts shall be installed on concrete foundations with the base plate bolted on to the anchor bolts. The high mast shall be painted with a coat of primer and two coats of aluminium paint, the second coat to be given just before handing over to the Purchaser. The high masts shall be numbered as per drawings. The high masts shall be connected to the plant earth grid at two points.

Exact orientation of flood lighting fixtures shall be decided at site to achieve optimum utility of these fixtures.

A separate earth pit (lightening) shall be provided near each high mast & shall be connected to lightning Arrestor of High Mast through insulated cable running directly from LA. This pit shall be connected to lightning earth grid.

3.7 EARTHING INSTALLATION

Entire system shall be earthed in accordance with the provisions of the relevant IEC recommendations/ IS code of practice IS 3043-1987 and Indian Electricity Rules, so that the values of the step and contact potentials in case of faults are kept within safe permissible limits.

This consist of main earth conductor (grid conductor) forming a closed ring network with required number of earth electrodes connected to it to provide a common earth for electrical device and metallic structures. From each earth electrode two distinct connections shall be made of the main earth conductor. The earth plates shall be used for taking multiple earth connections to two or more equipment.

The earth conductors shall be laid in ground, along cable trays / cable trench / pipe rack etc as indicated on the earthing layout drawings. The location shown on the earthing layout drawings are indicative. The exact location of earth conductors in the filed shall be determined by Contractor in consultation with the Purchaser. Earth conductors shall be located avoiding interferences with other services such as piping, instrumentation, civil, structural, mechanical etc.

The ring earthing system around each building shall be laid at a distance of approximately 1.5 m from the building and at a depth of approximately 0.8m. The ring shall be bonded at intervals to the building steel structures, reinforcement of building columns and also to pipes, wherever they are crossing. The earth ring shall further be connected at intervals to deep earthing electrodes to achieve a combined earth resistance of less than **one ohm**.
All exposed metal part such as HT/LT switchgear, DP/FP structure, distribution board, metal clad switchgear enclosure, lamp brackets, lamp holder, plug sockets, lighting poles, junction boxes, high mast etc shall be properly earthed by connecting these to the earth electrode by means of GI wire/Flat or PVC insulated Cu conductor of approved size to pass the fault current safely to earth in case of any fault.

Where lined cable trenches are available, the earth conductor shall be laid in the trenches and shall be firmly cleated to the sidewall of concrete trenches using GI clamps at interval of 400 mm to 500 mm and near to the termination end. The earthing conductor shall run along one of the cable trays along a cable

@MECON Limited; all rights reserves

route. The earthing conductor shall be suitably cleated and electrically bonded to all the other cable trays on the same cable route at regular interval of 25 to 30 metre. The earthing for equipment shall be tapped from the main earth conductor and not from cable tray support structure. Earth conductor when laid underground shall be at a depth of 600mm below finished grade level.

Joints and tapping in the main earth loop shall be made in such a way that reliable and good electrical connections are permanently ensured. All joints below grade shall be welded and shall be suitably protected by giving two coats of bitumen and covering with Hessian tape. Earth strip laid above ground shall be welded across straight through joints and joints shall be suitably protected by giving two coats of bitumen to avoid oxidation and insulation film formation of the strip surface. When two earth strips are to be joined by means of welding, lap welding with an overlapping of strip equivalent to double the width of the strip and all four sides shall be continuously welded. All joints at tappings above ground shall be means of connector/ lugs. A minimum of two bolts of adequate size shall be used for this purpose. Earthing strip joints at earth plate and equipment shall be through GI bolts, nut etc.

The earthing installation shall be done in accordance with the earthing drawings and the standard drawings of reference attached with this document. The entire earthing system shall fully comply with the Indian Electricity Act and Rules. The contractor shall carry out any changes desired by the Electrical Inspector or the owner, in order to make the installation conform to the Indian Electricity Rules at no extra cost. The exact location on the equipment shall be determined in field, in consultation with the Engineer-in-Charge or his authorized representative. Any changes in the methods, routing, size of conductors etc shall be subject to approval of the Owner/ Engineer-in-Charge before execution.

In process unit areas, the earthing cable shall be run along cable trays wherever specified in the layout drawings. The earthing cable shall be suitably cleated and electrically bonded to the cable tray at regular intervals

Installation of Earth Electrodes

Earth electrodes shall be installed as shown on earthing layout drawings and installation details. The location shown on the earthing layout drawings are indicative. The exact location of earth electrodes in the filed shall be determined by Contractor in consultation with the Purchaser, depending on the soil strata and resistivity. Earth electrodes shall be located avoiding interferences with other services such as road, building foundation, column, pipelines etc. The civil area drawings shall be referred for this. The distance between two earth electrodes shall not be less than twice the depth of electrode.

Earth electrodes shall preferably be located in a moist soil which has a fine texture, grain size and distribution. Wherever practicable the soil be dug up, all lumps broken and stones removed from the immediate vicinity of the electrodes and soil packed by watering and ramming as tight as possible.

The electrodes shall have a clean surface, not covered by paint, enamel, grease or other materials of poor conductivity.

All earth electrodes shall be tested for earth resistance by means of standard earth test meter. The tests

@MECON Limited; all rights reserves

shall take place in dry months, preferably after a protracted dry spell.

The disconnect facility shall be provided for the individual earth electrode to check its earth resistance periodically.

Location of earth electrodes shall be marked by permanent markers for easy identification. All earth Electrodes shall be serial numbered and also marked on 'As Built' drawing for future reference.

Individual earth electrodes shall be provided for each lighting arrestor and flood light mast.

Earthing system provided for concrete paved area by other agency where applicable; shall be connected to the plant earthing system below ground by minimum two earth connections.

Connection

The earth system connections shall generally cover the following:
- Equipment earthing for personnel safety
- System neutral earthing
- Static and lighting protection

The following shall be earthed.
- System neutral
- Current and potential transformer secondary neutral
- Metallic non-current carrying parts of all electrical apparatus such as transformers, switchboards, bus duct, motors, neutral earthing resistors, capacitors, UPS, battery charger panels, welding receptacles, power sockets, lighting / power panels, control stations, lighting fixtures etc.
- Steel structures/ columns, rail loadings platforms etc.
- Cable trays and racks, lighting mast and poles.
- Storage tanks, spheres, vessels, columns and all other process equipment.
- Fence and gate for electrical equipment (e.g. transformer, yard etc.)
- Cable shields and armour
- Flexible earth provision for Wagon, Truck
- Shield wire

Conductor size for branch connection to various equipment shall be as per Installation details unless otherwise stated on earthing layout drawings.

All process pipelines shall be bonded and earthed at the entry and exist points of battery limit of hazardous area. Earth continuity conductors across pipe flanges shall not be provided as per OISD 110.

Steel pipe racks in the process units and offsite area shall be earthed at every 24metres.

Equipment / street light pole etc. located remote from main network may be earthed by means of individual earth electrode and earth conductor unless otherwise stated in specifications.

The main earthing network shall be used for earthing of equipment to protect against static electricity.

All medium and high voltage equipment (above 250V) shall be earthed by two separate and distinct

@MECON Limited; all rights reserves

connections with earth.

Plant instrument system clean earthing, UPS system clean / safety earth shall be separate from the electrical earthing system.

All paint, scale and enamel shall be removed from the contact surface before the earthing connections are made.

All earthing connections for equipment earthing shall be preferably from the earth plate mounted above ground wherever provided. Equipment foundation bolts shall not be used for earthing connection.

Earth connections shall be made through compression type cable welded lugs.

All hardware used for earthing installation shall be hot dip galvanized or zinc passivated. Spring washers shall be used for all earthing connections and all connections adequately locked against loosening.

Lighting fixtures and receptacles shall be earthed through the extra core provided in the lighting circuit/ cable for this purpose.

The reinforcement of sub-station building and the sub-station floor shall be connected to main earth grid.

TESTING OF EARTHING SYSTEM

Earthing systems/connections shall be tested as follows:

Resistance of individual electrodes shall be measured after disconnecting it from the grid.
Earthing resistance of the grid shall be measured after connecting all the electrodes to the grid. The resistance between any point on the metallic earth grid and the general mass of earth shall not exceed 1 ohm.

The resistance to earth shall be measured at the following:

1) At each electrical system earth or system neutral earth.
2) At each earth provided for structure lightning protections.
3) At one point on each earthing system used to earth electrical equipment enclosure.
4) At one point on each earthing system used to earth wiring system enclosures such as metal conduits and cable sheaths or armour.
5) At one point on each fence enclosing electrical equipment.

Measurement shall be made before connection is made between the ground and the object to be grounded.

3.8 LIGHTNING PROTECTION INSTALLATION:

Lightning protection shall be provided for the equipment, structure and buildings as shown on lightning

@MECON Limited; all rights reserves

protection layout drawings. Self-conducting structures shall not require separate aerial rod and down conductors. These shall however be connected to the earthing system at two or more points as shown on earthing layout drawing. An independent earthing network shall be provided for lightning protection and this shall be bonded at least at two points with the main earthing network below ground. Lightning down conductor shall be brought to earth electrode in shortest straight path as feasible to minimize surge impedance. Aerial and down conductors shall be located avoiding interferences with other services such as ducts, pipes, equipment, supports etc.

3.9 BATTERIES:

Battery (Lead acid, Nickel Cadmium or VRLA type as specified) shall be erected on stands and insulators supplied by the manufacturer of the batteries. The installation shall be done as per the layout drawings and manufacturer's instructions. Electrolyte if required / as applicable shall be filled as per manufacturer's instructions. Inter row connections shall be made with the leads supplied by the manufacturer.

3.10 NEUTRAL EARTHING RESISTOR

The neutral earthing resistor shall be inspected for any damage to the resistor grid and other components. The resistor shall be levelled and installed. All covers etc. shall be checked for tightness to ensure that the enclosure of the resistor is dust, vermin and weatherproof. Earthing conductors shall be taken from the out-end terminal of the resistor, for connection to earth electrodes and to the main grid.

3.11 WELDING RECEPTACLES:

The welding receptacles shall be erected on steel/concrete structures as per the drawings. In isolated places a separate support shall be fabricated and installed.

3.12 PUSH BUTTON/CONTROL STATIONS

The push buttons / control stations shall be installed near to the motors to be controlled. Individual channel supports shall be installed as per standard. If control stations for hazardous areas are to be supplied by contractor, these shall be of Ex (d) type, tested by CMRI and approved by CCE or other applicable certifying authorities. All outdoor push buttons / control stations shall preferably have integral canopies for additional weather protection. The canopy shall be made of 2 mm thick galvanized sheet steel or FRP where these are not integral with the equipment.

3.13 Miscellaneous Items

Contractor shall provide the following items in substation, as per Indian Electricity Rules.

Fire buckets filled with clean dry sand and ready for immediate use for extinguishing fires and fire extinguisher (carbon dioxide, dry chemical extinguisher etc.) suitable for dealing with electric fires shall be conspicuously marked and kept.

First aid boxes containing ointments and medicines for immediate treatment of injuries (As prescribed by

@MECON Limited; all rights reserves

Indian Red Cross Society or equivalent).

Instructions of restoration of persons suffering from electric shock in English, Hindi and local language of the district shall be affixed in a conspicuous place.
Danger boards (H.V., M.V.) shall be provided on transformer gate, switchboards, entrance to switchgear room and at other places as required by Purchaser.

Generators

Contractor shall install main, emergency or standby generators with their gas turbine or diesel engine drivers, and equipment associated with these 'packages', in locations as shown on the AFC contract drawings and in accordance with manufacturer's instructions. Contractor shall install and terminate interconnecting cables in accordance with equipment vendor's drawings and contract drawings.

Contractor shall check the installation and correctness of the various protection devices fitted to medium voltage machines. Anti-condensation heaters where fitted shall be connected up to a temporary supply and left energized as soon as equipment is delivered.

3.14 LIST OF CONSTRUCTION EQUIPMENT

The contractor shall have all necessary construction equipment, tools and tackles and testing instruments to carry out the erection works and to commission the system as specified. These shall include but not be limited to the following, and these shall be brought to site by contractor before the start of work.

Equipment

1. Portable grinder.
2. Portable welding machine.
3. Portable gas cutting / welding set.
4. Pipe threading machine.
5. Pipe bending machine(hydraulic).
6. Portable drill machine suitable to take up drilling for different sizes as per requirement.
7. Dewatering pump sets (diesel driven).
8. Power Hacksaw.
9. Conduit Dyset.
10. Hydraulic crimping Machine
11. Hand crimping tool.
12. Portable electric blowers, vacuum cleaners.
13. Miscellaneous items such as slings, pulleys, tarpaulins, wooden sleepers, ladders, etc. as required.
14. Safety belts, safety goggles, and gloves.
15. Separate tool kit for each Electrician.

Test Instruments

@MECON Limited; all rights reserves

1. Insulation tester 1000V hand driven.
2. Insulation tester 2500V motor/hand driven.
3. Insulation tester 5000V motor/hand driven
4. Phase sequence indicator.
5. Earth Resistance tester.
6. Single phase variac
7. 3 phases variac of adequate capacity.
8. Secondary injection testing kit (By Vendor).
9. Multimeter both analogue and digital
10. Portable Ammeters, Wattmeters, P.F. meters.
11. Portable Voltmeters.
12. Clip on meters of different ranges.
13. Tacho-meter.
14. Kelvins double bridge for measurement of very low resistance.
15. D.C. high -pot test kit.
16. Oil filtration machine of adequate capacity.
17. LUX METER to measure illumination levels.

****

MECON LTD, Delhi

@MECON Limited; all rights reserves

REV: 0
EDITION: 3

TECHNICAL SPECIFICATION

FOR

FIELD INSPECTION, TESTING and COMMISSIONING

DOCUMENT No. : MEC/05/E9/TS/15

Prepared & Issued by

ELECTRICAL SECTION
(Oil & Gas SBU)
MECON LIMITED
(A Govt. of India Undertaking)
13th& 15th Floor, North Tower, SCOPE MINAR,
Laxmi Nagar District Centre,
Delhi-110092 (India)

@MECON Limited; all rights reserves

MECON LTD, Delhi

INDEX

S.No.	DESCRIPTION	PAGES
01.00	CODES AND STANDARDS	5
02.00	**FIELD INTALLATION TESTING and COMMISSIONING**	6
02.01	SWITCHBOARD	8
02.02	DG SET	10
02.03	BUSDUCT	11
02.04	TRANSFORMER	12
02.05	HV and MV MOTORS	13
02.06	POWER AND CONTROL CABLES	15
02.07	CABLE TRAY	18
02.08	LIGHTING INSTALLATION	18
02.09	CONDUIT AND WIRING	19
02.10	EARTHING INSTALLATION	22
02.11	LIGHTNING PROTECTION INSTALLATION	23
02.12	BATTERY, BATTERY CHARGER AND UPS	24
02.13	HIGH VOLTAGE TESTING	26
03.00	**LIST OF CONSTRUCTION EQUIPMENTS**	27
04.00	**FIELD INSPECTION REPORT AND TEST PLAN FORMATS**	
04.01	ELECTRICAL PANELS	28
04.02	DG SET	29
04.03	BUSDUCT	32
04.04	TRANSFORMER	34
04.05	MOTORS	35
04.06	CABLES	37
04.07	CABLE TRAY	36
04.08	INTERNAL LIGHTING	41
04.09	OUTDOOR LIGHTING	42
04.10	HIGH MAST	43
04.11	ELECTRICAL SWICTHES	44
04.12	CONDUIT WIRING	45
04.13	EARTHING	46
04.14	LIGHTNING PROTECTION	48
04.15	BATTERIES	50
04.16	UPS	51
05.00	**INCOMING MATERIAL INSPECTION REPORT**	52

@MECON Limited; all rights reserves

MECON D. Delhi

Rev	Date	Prepared by	Checked by	Approved by
0	11.07.2025	Chirosmita Banerjee	Saurabh Singh	Pankaj Shrivastava

© Copyright MECON Limited – All rights reserved.
THIS DOCUMENT IS THE SOLE PROPERTY OF MECON AND ISSUED FOR THE SPECIFIC PROJECT MENTIONED HEREIN. THIS IS NOT TO BE COPIED OR USED FOR ANY OTHER PROJECTS UNLESS EXPLICITLY PERMITTED BY MECON.

MECON LTD, Delhi

@MECON Limited; all rights reserves

AMENDMENT STATUS

(OLD NUMBER OF STANDARD: MEC/TS/05/E9/15)

Sl. No.	Clause / Paragraph / Annexure / Exhibit / Drawing Amended	Page No.	Revision	Date	By (Name)	Verified (Name)
1	Document Number replaced with New number as **MEC/05/E9/TS/15**	All	Rev 0/ Ed 3	11.07.2025		
2	Section re-name as Electrical Section (Oil & Gas SBU) Delhi	All	Rev 0/ Ed 3	11.07.2025		

MECON LTD, Delhi

@MECON Limited; all rights reserves

1.0 INTENT

The intent of this standard specification is to define the general requirements for design, manufacture, assembly and testing at manufacturer's works, packing, transportation and receipt at site with all materials and accessories of Field Inspection, Testing and Commissioning.

1.0 CODES AND STANDARDS

1.1 The equipment shall comply with the requirements of latest revision of following standards issued by BIS (Bureau of Indian Standards), unless otherwise specified:

SP 30 (BIS)	National Electrical Code 2011
IS 1255	Code of practice for installation and maintenance of power cables up to and including 33kV rating
IS 7816	Guide for testing Insulation resistance of rotating machines
IS 10810: Part 43	Method of test for cables: Part 43 - Insulation resistances IS
10810: Part 45	Method of test for cables: Part 45 - High Voltage test
OISD-STD-137	Inspection of Electrical Equipment
OISD-RP-147	Inspection and safe practices during electrical installations

1.2 In addition to the above it shall be ensured that the field inspection, testing and commissioning conforms to the requirements of the following as applicable:

a. Indian Electricity Act and Rules.

b. Regulations laid down by CEA/Electrical Inspectorate.

c. Regulations laid down by PESO / DGMS (as applicable).

d. The petroleum rules (ministry of Industry Government of India).

e. Any other regulations laid down by central/state/local authorities and Insurance agencies.

In case of imported equipment standards of the country of origin shall be applicable if these standards are equivalent or stringent than the applicable Indian standards.
The equipment shall also confirm to the provisions of Indian Electricity rules and other statutory regulations currently in force in the country.
In case of any contradiction between various referred standards/ specifications/ data sheet and statutory regulations the following order of priority shall govern. However, the stringent of the below shall be followed.

@MECON Limited; all rights reserves

MECON LTD. Delhi

- Statutory regulations.
- Schedule of Rate
- Scope of Work/ Job specification.
- Design Basis.
- Data sheets.
- Standard Specification.
- Codes and standards.

2.0 FIELD INSPECTION, TESTING AND COMMISSIONING

Contractor shall carry out complete filed inspection, testing and commissioning of electrical equipment as per Inspection Test Plans.

Before the complete installation or an addition to the existing installation is put into service, inspection/ pre-commissioning checks and tests shall carried out by contractor, In the event of defects being found out, the same shall be rectified and the installation retested as applicable.

The pre-commissioning inspection among the requirements shall include visual inspection, checking the workmanship of the installation, the rating of equipment, safety clearances sizes of cables installed, conformance to the AFC document, soundness of switchgear bus connections, wiring properly dressed and labelled, sealing of unused cable entries, checking of all safety interlocks, control/ interface functions as per requirements etc.

Visual inspection for soundness of bus bar connections of bus ducts, terminal connections of equipment / motor shall be carried out. After the visual inspection, all the covers of equipment manufacturers instructions. It shall be ensure that no foreign materials are present inside bus duct and equipment terminal boxes.

Pre- commissioning tests shall include but not be limited to the following. The works/testing at site shall be done as per the scope matrix between the site installation contractor and respective equipment vendor attached in each tender.

- Continuity test for each winding, power and control circuits.
- Insulation test for each winding, power and control circuit.
- High Voltage test for cables.
- Dielectric strength test on transformer oil.
- Magnetic Current Test and Magnetic Core Balance Test.
- Vector Group
- Voltage Ratio Test
- Short Circuit Test
- Winding Resistance Test for CTs, PTs, Closing coils & trip coil of breakers, Transformers for each tap position.
- WTI, OTI, Buchholz, PRV, MOG, Emergency Stop Simulations

@MECON Limited; all rights reserves

- Checking the correctness of wiring schemes, control circuit interlocks for intended functioning.
- Verification of phase sequence.
- Testing of all types of relays/ releases for required operation.
- Testing of measuring instruments for proper functioning
- Polarity test, ratio test and Knee point voltage test for CT's and PT's
- Polarity test and ratio test for PT's.
- Earth continuity test for all circuits.
- Checking of safety features of correctness of operation etc.
- Checking of all wired interface contacts (analog, digital input/ output contacts) for PLC and ESD interface, at panel and equipment terminal chambers as applicable. (Contractor shall co-ordinate with the other agencies involved for the above and provide support service for checking interfaces of electrical equipments and the intended functioning)
- Earth resistance measurement for each earth electrode and the earthing system as a whole.
- Lighting installation shall be tested for correct illumination levels, with the fittings installed. Fittings shall be operated only With specified type of a lamp or tube.
- Checking of battery float and boost charge voltage at correct levels.
- Battery duty cycle test to meet the load cycle requirement shall be performed at site after installation as part of commissioning.
- Load trials as agreed between Vendor/Contractor and Purchaser.

After the above test and inspection are completed, control circuits shall be tested for correct operation under all operating combinations and proved correct applying power to main circuits.

A close visual inspection of electrical equipment in hazardous area shall be made to ensure that equipment is suitable for the classified zone and gas group and correctly installed , with all covers, bolts, nuts and hardware's intact and there is no physical damage mark seen on the enclosure.

Site Acceptance test procedure for specific equipment shall be furnished by the respective equipment vendor. The contractor shall provide necessary assistance to the equipment vendor to perform site acceptance testing to enable the equipment vendor to perform the same.

All pre-commissioning checks and tests shall be carried out as per the directions of Purchaser. In addition to the equipment manufacturers instructions, pre-commissioning check requirements shall also be complied. All tests shall be carried out by vender/contractor in the presence of Purchaser.

The Vender/contractor shall bring to site required tools, tackles and testing instruments for carrying out filed testing, Vender/Contractor shall use only calibrated measuring and test instrument and shall maintain calibrated records.

The Insulation Resistance test values for various electrical equipment shall be as mentioned below:

@MECON Limited; all rights reserves

2.1 HV, MV and Miscellaneous Switchboards

The insulation resistance test values for switchboards shall be as per following table:

Rated Voltage of the Switchboard	DC Test Voltage in Volts	Minimum Insulation resistance in Mega ohms
33,000V	5,000	200
11,000V	5,000	200
6,600V	1,000	200
3,300V	1,000	200
415V	1,000	100
240V	500	10
110V	500	10

SITE TEST

- IR test
- HV test with 2.5 kV megger for 1 min.
- Functional test for all feeders.
- Testing and calibration of all meters.
- Checking and calibration of overload relays and protective relays by primary injection method.
- Check operation of contactors from local and remote points.
- Checking of interlocking between incomers/ bus couplers and other feeders
- Testing of CTs & PTs installed in panel (Ratio, polarity, winding resistance & class as per datasheet)
- Test of prove inter changeability of similar parts.
- Test to prove correct operation of breakers at minimum and maximum specified control voltages.
- Checking operation of RC circuit (if there) for tripping of circuit breaker after disappearance of control voltage.
- Checking of earthing connection for neutral-earth bus, cable armour, location of E/F CT etc. as per the scheme.

@MECON Limited; all rights reserves

- Checking of tests, service and draw out position of all the breakers and operations of mechanical flag indicator and electrical indication lamps.
- Checking the functioning of various electrical schemes like auto change over, signalling etc.
- Contact resistance test for bus bar & breakers.
- Timing test for ACBs & VCBs.
- Hi Pot test for Breakers (above 1100V).

Pre-Commissioning Check List:

Before commissioning any switchboard, following points shall be checked and ensured for safe energizing of the switchboard:

The installation of equipment to be commissioned is complete in all respects with its auxiliaries and all other mounting including earthing. Openings in floor within and outside panels have been sealed off. All cover and door gaskets are intact to make the enclosure vermin proof.

a) All the metering instruments have been checked and found in working order. Indicating lamps are healthy and are in correct position. All power and control fuses are of proper rating.

b) That the polarity test and ratio test of all the P.T.s and C.T.s is complete and phase sequence of C.T.s conforms to the correct vector group connections. Wiring continuity and correctness are ensured in the protection and measurement circuits. Polarity of D.C. supply for all the circuits is correct.

c) The high voltage tests of incoming and outgoing cables have been conducted and results are satisfactory.

d) All the protective relays including both conventional and microprocessor based numerical relays and thermal overload relays have been tested for secondary injection tests. (Primary injection tests shall be carried out for overload relays, differential protection, Restricted Earth fault protection at full / reduced current to ensure correctness of complete wiring). Relay settings, status indications, fault annunciations, data logging, display of switchboard SLDs shall be verified from MMI in case the same is provided.

e) The I.R. Value has been recorded for bus bars, circuit breaker, incoming and outgoing cables, control wiring and potential transformers. Where required joint resistance of bus bars have been recorded and found to be satisfactory. All the surroundings and panels have been cleaned and temporary earth leads have been removed.

@MECON Limited; all rights reserves

2.2 DG SET

The Tenderer shall perform the preliminary acceptance test (PAT) and Final acceptance test (FAT) to ensure that the plant and equipment supplied by them meet purchasers' system requirements.

Primary acceptance test for equipment and system covered in the specification shall be conducted unit wise or group wise within a reasonable period after the completion of erection work which will be mutually agreed upon.

The following test shall be performed at site: -

1. Visual and Dimensional check
2. Starting up and interlock checking as per approved scheme.
3. Governor response
4. Voltage regulator response
5. Load test
6. Functional tests on control panel, Sync cum AMF Panel/Only AMF Panel.
7. Power output at 100% Capacity- No Negative Tolerance.
8. Auxiliary power Consumption.
9. Guaranteed fuel oil consumption at 75% PPR of the engine and maximum load on the DG set.
10. Lubricating oil consumption at 50% PPR of the engine.
11. Prime power Rating (PPR) output of the diesel generator set at site at various points of load test.
12. Noise level over maximum load range.
13. Vibration level over maximum load range.
14. HSD shall be the fuel for performance test at the factory and functional test at site.

All tools & test equipment as required for the tests to be conducted at site to be arranged by vendor. CT, PT & relays if any supplied by vendor, same to be tested as per individual equipment test procedure as mentioned elsewhere in MR/ SOR.

Field test report to be prepared & submitted duly signed by vendor & EPMC to the purchaser.

MECON LTD, Delhi

@MECON Limited; all rights reserves

2.3 BUS DUCT

The insulation resistance test values for Transformers shall be as per following table:

Rated Voltage (Highest System Voltage) KV (rms)	Standard Impulse Withstand Voltage KV(Peak)	One Minute Power Frequency Withstand Voltage KV(rms)
3.6	40	10
7.2	60	20
12.0	75	28
17.5	95	38
24.0	125	50
36.0	170	70

TEST

A. Routine Tests

i) One min. power freq. withstand voltage.
ii) Measurement of insulation resistance.
iii) Measurement of resistance and reactance of bus bars.

B. Type Tests

i) Heat run test
ii) Short time rating test (thermal & dynamic)
iii) Impulse withstand test
iv) Tests for degree of protection for enclosures

C. Site Tests

- IR measurement before and after HV test.
- HV test.
- Checking tightness of bolts with torque wrench.
- Checking for phase sequence marking.
- Check for clearances between phase to phase and phase to earth.
- Check for minor damages and cracks in supporting insulators and bushings after cleaning.
- Checking of bus bar cracks and rectification of same.
- Checking for inspection openings and accessibility for replacement of insulator etc.
- Check tightness of earthing connections on enclosure.
- Checking of silica gel breather (if there).
- Checking of working of space heater.
- Contact Resistance Measurement Test

@MECON Limited; all rights reserves

2.4 TRANSFORMERS

The insulation resistance test values for Transformers shall be as per following table:

Rated Voltage of the Transformers	DC Test Voltage in Volts	Minimum Insulation resistance in Mega ohms
Up to 600V	1,000	100
601 to 500V	2,500	1,000
5001 to 15,000V	5,000	5,000
15001 to 35,000V	5,000	10,000

It shall be ensured that during insulation tests, electronic devices and components that are liable to get damaged on applied test voltage shall be disconnected from circuit. The instructions of equipment / panel manufacturer shall be followed strictly in this regard.

For medium voltage (up to 1000V), 1000V Megger and for high voltage 5kV Megger shall be used.

Testing

A. Routine Tests

i) Assembly inspection/ Painting check
ii) Measurement of winding resistance
iii) Measurement of voltage ratio and check of voltage vector relationship
iv) Measurement of impedance voltage (Principal tapping), short circuit impedance and load loss.
v) Measurement of no-load and current.
vi) Measurement of insulation resistance/ polarization index.
vi) Dielectric test:
   a) Induced over voltage withstand test
   b) Applied voltage withstand test (H.V. power frequency test)
vii) Certification for off-load tap changer
viii) Final documentation check

B. Type Tests

i) Temperature rise test
ii) Measurement of acoustic sound level
iii) Lightning impulse withstand test (if test certificates are not available)

@MECON Limited; all rights reserves

iv) Short circuit test

v) Measurement of commutating reactance and determination of inductive voltage drops (for thyristor converter transformer only).

Site Tests

The tests to be carried out on the equipment at pre-commissioning stage will include following but not limited to the following:

- IR test on each winding to ground and between winding and check for polarization index.
- Turns ratio test on each tap
- Polarity and vector group test
- Measurement of winding resistance at each tap position for windings by Kelvin bridge.
- Heating and drying and checking with heating and cooling curve.
- Checking of earthing wrt transformer tank (flexible from top cover to tank) other parts, neutrals and tank to electrodes of LAs (for LAs located near transformer).
- Testing of Buchholz relay for alarm and trip conditions.
- For bushing (SEF & REF) CTs, tests applicable will be as for current transformers.
- Calibration and setting of oil/winding temperature indicators, level gauge. OTI & WTI transducers for 4-20mA output & its integration with DCS System
- Check insulators for cracks.
- Checking for oil leakage and arresting of leakages (if required)
- Checking of operation of all valves.
- Checking of open operation of all valves (except drain and filter set)
- Filtration of oil by using line filter and heater set
- BDV test on Oil samples from top & bottom
- Checking of Oil for acidity, water content and tan delta as per IS 335.
- Measurement of magnetizing current and no-load loss.
- Checking of silica gel breather.
- Checking of noise level at no load and at full load.

@MECON Limited; all rights reserves

- Checking of air circulation conditions for indoor transformers.
- Conducting magnetic balance test.
- Checking of other points given in manufacturer's commissioning manuals.
- IR, wiring and operational tests on all control devices in control cabinet, oil level indicator winding and oil temp. indicators, oil pump, cooling fan etc.

2.5 Generators and Motors

The insulation resistance test values for Generators and Motors shall be as per following table:

Rated Voltage of the Generators and Motors	DC Test Voltage in Volts	Minimum Insulation resistance in Mega ohms
11,000V	5,000	120
6,600V	1,000	80
3,300V	1,000	50
415V	1,000	15
240V	500	12

Testing

A. Routine Tests

The following are the routine tests carried out on each and every motor:

1 Measurement of resistance.
2 Insulation resistance test.
3 Motors are tested at 1/3 times the rated voltage for checking the ability of the motor to run upto full speed, when switched in either direction.
4 No load test.
5 High voltage test.

B. Type Tests

1 Measurement of rotor resistance.

@MECON Limited; all rights reserves

2 No load test
3 Locked rotor test.
4 Full load reading of voltage, current, power input and slip.
5 Temperature rise test.
6 Momentary overload test.
7 Insulation resistance test.
8 High voltage test.
9 Polarization index test (for HT motors)

2.6 CABLES

Before energizing, the insulation resistance of every circuit shall be measured from phase to neutral and from phase/neutral to earth.

Where splices or terminations are required in circuits rated above 650 volts, insulation resistance of each length of cable shall be measured before splicing and /or terminating. After completion of splices and /or terminations measurements shall be repeated.

The insulation resistance of directly buried cable shall be measured before cable trenches are back filled. Measurements shall be repeated after backfilling.

D.C. High Voltage test shall be conducted on cables given below after installation.

a) All 1100 volts grade cables in which straight through joints have been made.

b) All cables above 1100Vgrade.

Cables shall be installed in final positions with all the straight through joints complete.

During the high voltage test, all other electrical equipment related to the cable installation, such as switches, instrument transformers, bus bars, etc., must be earthed and adequate clearance shall be maintained from the other equipment and framework to prevent flash overs. In each test, the metallic sheath/screen/armour shall be connected to earth.

The insulation resistance test values for cables shall be as per following table:

Rated Voltage of the Cable	DC Test Voltage in Volts	Minimum Insulation resistance in Mega ohms
Lighting and power circuit wiring	250	1
650 /1100V grade cables	1,000	10
1,900/3,600V grade cables	1,000	200

@MECON Limited; all rights reserves

3,800/6,600V grade cables	1,000	200
6,350/11,000V grade cables	5,000	200
8,700/15,000V grade cables	5,000	200
12,700/22000V grade cables	5,000	200
19,000/33000V grade cables	5,000	200

For cables up to 1.1KV grade 500V megger and for HV cables 2.5KV/5KV megger shall be used.

Insulation resistance value of the cable shall be taken before & after lying of cables and before energizing the cable. The IR values shall be recorded in the approved inspection test plan formats.

For cables of above 1100V grade, the DC high voltage test shall be performed before energizing the cable. During the DC high voltage test shall be conducted on all 1100 volts & above grade cables in which straight through joints have been made. All other electrical equipment related to the cable installation such as switches, instrument transformers, bus bars etc. must be earthed and adequate clearance shall be maintained from other equipment and framework to prevent flashover. In each test, the metallic sheath/screen/armor shall be also connected to earth.

For record purposes test data shall include the measure values of leakage current versus time.

The D.C. high voltage test data shall be performed as detailed below in the presence of the engineer-in-charge or his authorized representative only. Terminations shall be kept unfinished so that motors, switchgear, transformer etc are not subjected to test voltage.
The test voltage shall be under: -

i) For cables 3.3 KV grade 5.4 KV DC
ii) For cables 6.6 KV grade 10.8 KV DC
iii) For cables 11 KV grade 18 KV DC

Testing

Shop Tests

The cables shall be subject to shop tests in accordance with relevant standards to prove the design and general qualities of the cables as below: -
Routine test on each drum of cables

Acceptance tests

On drum chosen at random for acceptance of the lot
High Voltage withstand test for HT cable (Hi Pot test)
Type tests certificates on each type of cable, inclusive of measurement of armour D.C. resistance of power cables will be furnished by Contractor

@MECON Limited; all rights reserves

PACKING

1. Cables will suit barrel diameter and securely clamped/fixed. The barrels must be sufficiently strong to withstand mechanical shocks and shall effectively protect against transit.
2. Both ends of cable will be metal capped to prevent moisture ingression. Ends shall be kept inside the cable drum in a manner so that these are accessible for testing.
3. Cable drum identification/marking will be as follows:
   a) Maker's name
   b) Consignee's full address
   c) Type size and length of cables
   d) Net and gross weights

   Any other marking for shipping Drum Markings

Drum Lengths

1. LT Cables will be delivered at site preferably on standard drums each containing 500 m or 1000 m cables, where total quantity of a particular cable is less than 500 m, the entire length will be supplied in one drum.

2. For 90% cable drum of each item of cable permissible tolerance is in length + 5% For 10% balance cable drums, Contractor shall ensure that each 500 m capacity drum contains at least 250m and each 1000m capacity drum contains at least 500m cable lengths. Overall tolerance for each item of cable is + 1% of total length.

SITE TEST

1. Visual check
2. Checking of continuity and IR values for all the cables before and after HV test.
3. HV test and measurement of leakage current after termination of cable kits.
4. Checking of earth continuity for armour and fourth core (if applicable)
5. Check for mechanical protection of cables.
6. Check for identification (tag number system) distance placement of cable marker, cable joint etc. as per the cable layout drawing.
7. Check earthing of cable structures.
8. Check safe head room in tunnel and basement area.
9. Check clearance from ventilation duct and light fittings for cable structures.
10. Check proper fixing of cable structures.
11. Check for proper drainage and removal of water (if any).
12. Lightning Protection
13. Check continuity of all the earth strips / shield wire.
14. Check tightness of all connections.
15. Measure earth resistance of each electrode and combined system.

@MECON Limited; all rights reserves

2.7 CABLE TRAY

1. All cable trays used are G.I tray type as per specification.
2. Cable trays shall be hot dip galvanized, either ladder type or perforated type
3. The cable trays shall be in standard length sections. Individual sections shall be securely bolted together on 50 X 50 X 5 mm painted iron angles.
4. The cable trays shall be supported on 65 x 65 x 5mm painted iron angle painted as per specification/approved drawing.
5. Vertical support shall be ISMC 100and insertion plates shall be provided in cable trench to support cable trays.
6. All support work shall be completed prior to installation work
7. 10% future space shall be provided for future cables.
8. Supports shall be provided at an interval of 1.0 meters or as per the drawing.

2.8 LIGHTING INSTALLATION

Pre-commissioning checks and tests shall include but not be limited to the following:

a) The insulation resistance of each circuit without the lamps (load) being in place shall be measured and it should not be less than 1000,000 ohms. (Between phases, phases to neutral, phase/neutral to Earth).

b) Current and voltage of all the phases shall be measured at the lighting panel busbars with all the circuits switched on with lamps. If required load shall be balanced on the three phases.

c) The earth continuity for all socket outlets shall be checked. A fixed relative position of the phaseandneutralconnectionsinsidethesocketshallbeestablishedforallsockets.

d) After inserting all the lamps and switching on all the circuits, minimum and maximum illumination level shall be measured in the area and recorded.

e) It shall be ensured that switch provided for ON/OFF control of point (light/fan/socket) is only on LIVE side.

f) Operation of ELCB's shall be checked

g) focusing angle of fixtures shall be changed/ adjusted where required.

h) All the luminaires will be designed, manufactured and tested in accordance with the Indian Standards as far as they are applicable.

i) All the luminaires will be industrial type. Specification for the various types of sodium vapour and fluorescent fittings mentioned in the schedule of quantities will be followed. All the lighting fixtures will be complete with all parts along with lamps/tubes, control gears and accessories for installation and efficient performance whether specifically mentioned in the specification or in the schedule of items or not.

@MECON Limited; all rights reserves

j) Individual light fittings will be provided with suitable gland arrangements for 3x2.5 sq.mm armoured copper cable entry unless otherwise specified. Terminals of all fittings will be suitable for taking 3x2.5 sq.mm, copper conductor PVC insulated and PVC sheathed cable.

k) All fittings will be supplied with all interconnections made and fully wired upto the terminal block.

l) All live parts will be provided with suitable sleeves to prevent accidental contacts. The earthing terminal in the fitting will effectively earth the body of the entire luminaire.

m) Dust and vapour tight fittings will have the enclosures suitably designed to withstand the heating effect.

n) The fixing arrangement of various components and lamps will be in such a way that the maintenance and replacement jobs can be easily carried out.

o) All flameproof equipment will be provided with flameproof plugs.

p) Flame proof fittings and control gearboxes will be provided as per relevant IS in hazardous area.

Final Test of Materials of lightning system

1. Visual check
2. Dimensional check
3. Accessories fitting check
4. Mechanical and electrical test (where applicable)
5. Final documentation check.

2.9 CONDUIT AND WIRING

A) CONDUIT INSTALLATION

Embedded Conduit

I. Installation

a. Conduit installation may be embedded in RCC structures or brick work as per the approved drawing.

b. The installation in RCC structures shall be carried out before concrete after the completion of form work and reinforcement work.

c. Conduit size shall be as per the requirement. However minimum size of the conduit shall be 25 sq. mm.

d. Conduits laid in concrete shall have minimum 50mm cover up to the finished surface and shall preferably be laid behind the reinforcement.

@MECON Limited; all rights reserves

MECON LTD, Delhi

e. Conduits shall be securely fixed to prevent their movement during concreting.

f. Proper care shall be taken while installing the conduit near the beam and conduit openings shall be left for the light points as per the direction of the site engineer.

g. Installation in brickwork will require chases to be made in brick work, sufficiently deep to provide adequate cover for the conduits.

h. All embedded accessories such as junction boxes, switchboxes, etc. shall be mounted in such a way that they shall be flushed with the finished surface including plaster.

i. All joints in the installation shall be tight and properly covered to prevent ingress of concrete slurry, water or dust.

j. Conduits for bracket mounted lights shall be provided up to parapet of the wall for their electrical connection.

k. Each fixture shall be connected to Earth Wire.

II. Surface Conduit Installation

a. When conduits are exposed on surface, the complete routing shall be marked on the surface as per approved drawing. Conduit installation shall be carried out neatly with conduits runs truly vertical or horizontal.

b. All screwed connections shall ensure that at least five threads are engaged and electrical continuity shall be maintained.

c. Conduits &flexible PVC conduits shall be used for wiring in false ceiling.

d. Conduits &flexible PVC conduits shall be used for wiring above the surface wherever required.

e. Conduits shall be supported with saddles at a spacing of 1200mm maximum for conduits up to 25mm size and 1800mm for larger sizes. Saddles shall also be provided at both the fittings, Equipment, devices, junction boxes, bends and offset within 200mm maximum. However, this method shall be implemented only for open conduiting and not for concealed one.

f. Minimum clearance between conduits and surface shall be 6mm. Saddles shall be cast /malleable iron, cast aluminium or any other approved materials and galvanized painted.

g. Each electrical point, provisions to be provided to connect it by two ways/paths. Conduits shall be provided accordingly

@MECON Limited; all rights reserves

h. All the conduits from SSB/Power points/Fixture terminated below LDB shall be identical & have good aesthetic appearance.

i. Conduit terminated below LDB shall be identical & the aesthetic appearance shall be good.

III. Conduit wiring (Supply & Point wiring) :-

a. Conduit wiring shall generally be carried out with single core PVC insulated cables / wires.

b. The conduit installation shall be complete in all respects before the cables drawn in conduits.

c. The cables shall be neatly bunched together to prevent kinks or twisting.

d. Each point wiring shall comprise the following:

* Insulated copper single core wires of 600/1100v grade (HR PVC) and including one number for earthing. For suspending of fluorescent light fitting dome cover junction box shall be used. All wiring shall be done by using 2 Nos. of 1.5 Sq mm wires (one each for Phase& Neutral) plus 1 No. 1.5 sq.mm. wire for Earthing). Wiring for industrial socket for AC and power points shall be done by using 2 Nos. of 4 sq mm wire plus 1 No. of 2.5 sq mm wire as earthing**.**
* Color Code:-Phase- Red, Yellow, Blue. Neutral- Black. Earthing- Green.
* Wiring for exhaust fans shall be terminated in ceiling roses/receptacles and the connection from ceiling roses/receptacles to the exhaust fan shall be by means of a flexible cord equivalent in size to the main run of wires. For exhaust fan of battery room no plug shall be provided near to exhaust fan.
* Fabrication and fixing of hardware such as clamp, saddles, bolts, nuts, frame work etc as required. PVC insulated 1 Sq mm wire for copper earthing shall be run within conduits for earthing of fittings, junction boxes, switch/single phase socket outlet / enclosures.
* Each wire shall be traced for continuity, insulation testing and connection to be made at both ends
* Earthing shall be done at single point only.
* After erection, the entire conduit system shall be tested through-out, for mechanical & electrical continuity & shall be permanently connected to earth by means of earthing clamps, in accordance with Indian Electricity Rules.
* All conduits shall be IS certified & tested.
* For guard room, 3 Nos. of cable shall be used and junction boxes shall be provided for termination of these cables for normal power, emergency power and bore well starter.

@MECON Limited; all rights reserves

* Battery room SSB shall be located outside the room and exhaust fan of the battery room shall be directly connected to wiring (no plug socket required)

* Each Fixture shall be connected to earth wire.

2.10 EARTHING INSTALLATION

Earthing systems/ connections shall be tested as follows:

a) Resistance of individual earth electrodes shall be measured after disconnecting it from the grid by using standard earth test megger.

b) Earthing resistance of the grid shall be measured after connecting all the earth electrodes to the grid. The resistance value of an earth grid to the general mass of earth shall be as follows:

- For the electrical system and equipment, a value that ensures the operation of the protection device in the electrical circuit but not in excess of 1ohm.
- For lighting protection, the value of 5 ohms as earth resistance shall be desirable, but in no case it shall be more than 10ohms.

c) The resistance to earth shall be measured typically at the following points:

- At each electrical system earth or system neutral earth.
- At each earth provided for structure lighting protections.
- At one point on earthing system used to earth electrical equipment enclosures.
- At one point on earthing system used to earth wiring system, enclosures, such as metal conduits and cable sheaths or armour.
- At one point on fence enclosing electrical equipment.

SITE TEST

- Check tightness of all earth connections.
- Check earthing of all metallic equipment, cable trays, busbar supporting structures, building column (if steel) all electrical equipment, pipe lines etc. as per the drawing / specification
- Measurement of earth resistance for each electrode.
- Measurement of total earth resistance.
- Measurement of earth loop resistance for E/F path of biggest LT drive.

Final Test of Materials of earthing system

i) Visual check

ii) Dimensional check

@MECON Limited; all rights reserves

iii) Accessories fitting check

iv) Mechanical and electrical test (where applicable)

v) Final documentation check

2.11 LIGHTNING PROTECTION INSTALLATION

All buildings and plant structures vulnerable to lightning strokes owing to their height or exposed situation shall be protected against atmospheric flash over and lightning strokes in such a manner as to eliminate any danger to the personnel employed therein. Stipulations of IS : 2309 - 1969 shall be followed.

A 'Faraday Cage' made of hot galvanised strip steel connected to all buried pipes and steel structures crossing this cage ring shall be laid around each main building or plant unit as earthing device. This shall be separate from the electrical equipment earthing ring main.

All lightning arrestor earth leads of the buildings and plant units shall be connected to this cage ring.

Air termination network should cover all salient points of the structure. All metallic chimneys, ducts and the like above the roof of the structure shall be bonded to and form part of the air termination network. Vertical air termination points shall project at least 30 cm above the object on which it is fixed.

Down conductors shall follow the most direct path possible between air termination and earth termination avoiding sharp bends. Down conductor shall have a testing point adjacent to the earth electrode. Each conductor shall have an independent earth termination. All earth terminations shall be interconnected.

Earthing electrodes and grid for lightning protection will be distinct separate from the earthing system for earthing of electrical equipment and at no place will be connected to other earthing system.

Earthing connection to equipment subject to movement, vibration and shocks, shall be through flexible stranded conductors.

The termination of strips to the equipment shall be done by bolting and the wires shall be terminated by compression lugs. Jointing of strips shall be done by welding for proper continuity. All contact surfaces shall be thoroughly cleaned of dust and oil and after jointing, the joints shall be given bitumen paint.

Guidelines for installation of Earthing Conductor

- Earthing conductors laid directly in ground for **Lightning protection**, shall be coated with one coat of bituminised paints, be wrapped with one layer of bitumastic tape laid on half lapped and shall have a final coat of bituminised paint to prevent corrosion.
- Earthing conductors run on walls/floors/cable and equipment structures etc. shall be supported at suitable intervals and painted with black oxide paint.
- All joints in all kind of Earthing conductors except at earthing electrode shall be welded and painted

@MECON Limited; all rights reserves

black with bitumen paint.

- At road /rail crossings earthing strips shall be laid through conduits /concrete ducts.
- Special earthing shall be provided for all electronic equipment as per manufacturer's recommendations / practice.

2.12 BATTERY, BATTERY CHARGER & UPS SYSTEM

Pre-Commissioning Checks

- All Pre-Commissioning checks to be carried out shall be in full compliance with the Inspection Test Plan.
- All the test instruments used shall be calibrated before use and shall have a valid calibration certificate.
- All the tests on live circuits shall be carried out under permit control applying lock out tag procedures.
- The testing engineer shall carry out the pre-commissioning checks after obtaining the permit to work.
- All the incoming & outgoing control & power cables to be connected.
- Tightness of all the connections shall be checked and panel to panel inter panel wiring to be completed.
- The IR value of main bus bars, distribution bus bars and neutral bus bars is to be checked as per vendors manual and recorded.
- Mechanical operation of breakers shall be checked.
- Schemes shall be checked as per the schematic diagram.
- Electrical operation of breakers, Simulation and interlocks shall be checked before the energization of panels / boards.
- Battery to be filled with electrolyte and cleaned & hold to settle.
- The batteries shall be charged as per the vendors Manual.
- Specific gravity, temperature & Voltage of individual cells shall be checked and recorded as per the Inspection test Plan.
- All the safety requirements of testing are covered under the risk assessment for Electrical work. All testing shall be carried out on dead circuits prior to Energization.
- All the tests on live circuits shall be carried out under permit control applying lock out tag out procedures.

@MECON Limited; all rights reserves

MECON LTD, Delhi

- Measure the earth path resistance at the main earthing terminal.
- Measure the voltage and specific gravity of each cell and compare with the recommended values.
- When all the inspection and tests have been carried out, the batteries may be given their initial charge. This may be carried out under the supervision of vendor's representative on site. The boost and float charge voltage settings should be noted and confirm the current limit settings.
- Check the operation of the battery earth fault alarm and measure the earth current flowing for a zero-impedance earth fault.
- Check the operation of all alarms and trips including the main supply and charge failure alarms.
- Check the operation of the DC over and under voltage alarms and trips.
- After reaching required voltage and specific gravity levels stop the battery bank charging and put under standby as per vendor's manual recommendation.
- Functional check shall be carried out on each charger and UPS.
- If number of battery bank is two then parallel operation for charging to be checked with battery charger and UPS.
- Carry out a battery discharge test using the vendor procedure and record the results including decay graphs.
- Recharge the battery at completion of discharge test, record the specific gravity of the electrolyte and cell volts.

Commissioning

- The UPS/Battery Charger shall be commissioned only after successful completion of pre-commissioning tests/checks. The commissioning program shall be communicated to all concerned persons in advance.
- All the tests on live circuits shall be carried out under permit control applying lock out tag out procedures.
- The setting of all the relays shall be done as per relay coordination charts.
- All the commissioning activities shall be carried out under the direct supervision of the vendor / Company representative.

@MECON Limited; all rights reserves

2.13 HIGH VOLTAGE TESTING

D.C. high voltage test shall be conducted as per following table on all H. V. feeder cables and also on 1100V grade cables where straight through joints have been made.

Rated Voltage of Cable (kV)	TEST VOLTAGE (kV) BETWEEN		Duration (Minutes)
Uo / U *	Any Conductor and Metallic Sheath / Screen / Armour	Conductor to Conductor (For Unscreened Cables)	
0.65/1.1	3	3	5
1.9/3.3	5	9	5
3.3/3.3	9	9	5
3.8/6.6	10.5	18	5
6.6/6.6	18	18	5
6.35/11	18	30	5
11/11	30	30	5
12.7/22	37.5	-	5
19/33	60	-	5

* U**O :** Phase Voltage
U : Line Voltage

The cable cores must be discharged on completion of DC high voltage test and cable shall be kept earthed until it is put into service.

DC test voltage for old cables shall be 1.5 times rated voltage or less depending on the age of cables, repair work or nature of joining work carried out, etc. In any case, the test voltage shall not be less than the rated voltage.

All protective relays including thermal overload relays shall be tested by secondary injection current. Primary injection tests shall be carried out for differential protection, restricted earth fault protection at full/ reduced current to ensure correctness of complete wiring.

Before energizing any equipment, 'COMMISSIONING CLEARANCE FORM' as per standard format shall be duly filled in by contractor and submitted to MECON/ Owner. It shall be ensured that the electrical inspectorate approval is available before energizing the equipment.

@MECON Limited; all rights reserves

3.0 LIST OF CONSTRUCTION EQUIPMENT

The contractor shall have all necessary construction equipment, tools and tackles and testing instruments to carry out the erection works and to commission the system as specified. These shall include but not be limited to the following, and these shall be brought to site by contractor before the start of work.

EQUIPMENT

1. Portable grinder.
2. Portable welding machine.
3. Portable gas cutting / welding set.
4. Pipe threading machine.
5. Pipe bending machine(hydraulic).
6. Portable drill machine suitable to take up drilling for different sizes as per requirement.
7. Dewatering pump sets (diesel driven).
8. Power Hacksaw.
9. Conduit Dyset.
10. Hydraulic crimping Machine
11. Hand crimping tool.
12. Portable electric blowers, vacuum cleaners.
13. Miscellaneous items such as slings, pulleys, tarpaulins, wooden sleepers, ladders, etc. as required.
14. Safety belts, safety goggles, and gloves.
15. Separate tool kit for each Electrician.

TEST INSTRUMENTS

1. Insulation tester 1000V hand driven.
2. Insulation tester 2500V motor/hand driven.
3. Insulation tester 5000V motor/hand driven
4. Phase sequence indicator.
5. Earth Resistance tester.
6. Single phase variac
7. 3 phases variac of adequate capacity.
8. Secondary injection testing kit (By Vendor).
9. Multimeter both analogue and digital
10. Portable Ammeters, Wattmeters, P.F. meters.
11. Portable Voltmeters.
12. Clip on meters of different ranges.
13. Tacho-meter.
14. Kelvins double bridge for measurement of very low resistance.
15. D.C. high-pot test kit.
16. Oil filtration machine of adequate capacity.
17. LUX METER to measure illumination levels.

@MECON Limited; all rights reserves

Client and EPMC LOGO	INSPECTION REPORT FOR PANELS / DISTRIBUTION BORAD		
Contractor LOGO	**PROJECT:**	**JOB ID**	
	CLIENT:	**DOC ID**	
	EPMC:		
	CONTRACTOR:	**REV**	
LOCATION/ AREA:		**REPORT NO**	
		DATE	

PRELIMINARY CHECKOUT

SL NO	ACTIVITY	INSPECTION STATUS	REMARKS
1	Permanent Installation/ alignment, Checking of base channel, correct provision of grouting.		
2	Input supply available and termination complete.		
3	Panel interconnection correct		
4	Check the cleanliness inside the panel.		
5	All bolted connection inspected for tightness		
6	Proper termination of cable and wiring continuity		
7	Check all connection are tightened & ferruled		
8	Proper earthing of panel (doubly earthed)		
9	IR check of incoming and outgoing cables		
10	All cable check for proper cable tag		
11	Check function and operation		
12	Proper glanding termination		
13	Check name plate of panel		
14	Sealing of dummy hole in gland plate		

Remarks

For(contractor Name)	For (EPMC/Client)
Name	Name
Sign	Sign
Date	Date

@MECON Limited; all rights reserves

Client and EPMC LOGO	INSPECTION REPORT FOR DIESEL GENERATOR		
Contractor LOGO	PROJECT:	**JOB ID**	
	CLIENT:	**DOC ID**	
	EPMC:		
	CONTRACTOR:	**REV**	
LOCATION/ AREA:		**REPORT NO**	
		DATE	
Test Equipment type /Brand		**Calibration date**	

SL NO	Activity	Inspection Status	Remarks		Activity	Inspection Status	Remarks
1	EXTERIOR OF EQUIPMENT			14	EQUIPMENT IDENTIFICATION		
2	COMPLETENESS OF ASSEMBLY			15	BRACING		
3	EQUIPMENT ROTATION			16	PROPER PHASE CONNECTIONS		
4	CHECK OIL LEVEL			17	REFERENCE DRAWINGS		
5	CHECK FUEL LEVEL			18	WORKING CLEARANCE		
6	PROPER EQUIPMENT GROUNDING			19	ANCHORAGE		
7	CHECK METERS/GAUGES			20	ALL FILTERS AND VENTS CLEAR		
8	CHECK TIGHTNESS OF BOLTED CONNECTIONS			21	CHECK EQUIPMENT ENVIRONMENTAL CLASSIFICATION		
9	VERIFY GOVERNOR AND REGULATOR			22	CHECK FOR PROVISIONS OF SPILL CONTAINER		
10	CHECK VIBRATION			23	CONTROL SYSTEM		

@MECON Limited; all rights reserves

MECON Delhi

11	CHECK BATTERIES			24	CHECK FUEL FILTER		
12	CHECK RADIATOR FLUID			25	CHECK ALARM INDICATORS: PROPER COLOR FOR EACH FUNCTION		
13	PROPER SYSTEM GROUND			26			

VOLTAGE	R-N	Y-N	B-N	R-B	Y-B	R-Y
CURRENT	R	Y	B	N	G	
INSULATION RESISTANCE @V	R-GRID	Y-GRID	B-GRID	R-B	Y-B	R-Y
POLARIZATION INDEX RATIO = 10 MINUTE/1 MINUTE						
DC OVER POTENTIAL TEST @V						

LOAD TESTS AS A PERCENTAGE OF GENERATOR RATING

	NO LOAD	25%	50%	75%	100%	110% (Prime Engine Only)
R-N						
Y-N						
B-N						
R-B						
Y-B						
R-Y						
R						

@MECON Limited; all rights reserves

Y						
B						
N						
G						

Remarks

For(contractor Name)	For (EPMC/Client)
Name	Name
Sign	Sign
Date	Date

NOTES:

1. PERFORM 5 MEASUREMENTS AT ONE MINUTE INTERVALS.
2. DC HIPOT MEASUREMENTS SHOULD BEGIN AT 20% OF MAXIMUM TEST VOLTAGE AND INCREASE IN EQUAL INTERVALS.
   MAX DC TEST VOLTAGE = R (2 x NAME PLATE RATING) x 1.6
   WHERE R = .8 FOR DC TEST ON INSTALLATION
   R = .6 FOR DC TEST AFTER SERVICE
   (TEST MEASUREMENTS SHOULD NOT EXCEED MANUFACTURER'S RECOMMENDATION)
3. VOLTAGE MEASUREMENT TO BE MADE AFTER GENERATOR IS STARTED AND CONNECTED TO LOAD (CAN USE LOAD BANK).
4. DURING COMMISSIONING OF GENERATOR SETS OR ANY EQUIPMENT, A REPRESENTATIVE OF THE MANUFACTURING COMPANY OR SUPPLIER MUST BE PRESENT TO WITNESS AND/OR PERFORM THE TESTS.
5. ENGINE GENERATOR TESTING IS A VERY INTENSIVE PROCESS AND REQUIRES A 10 TO 14 HOUR DAY DEPENDING ON THE EQUIPMENT BEING COMMISSIONED. SUPPLIER/MANUFACTURER NORMALLY SUPPLY GENERATOR TESTING LOAD REQUIREMENTS.
6. VERIFY ALL SYSTEM CHECK POINTS DURING LOAD CHANGES AND RECORD PER SPECIFIED REQUIREMENTS AND/OR EQUIPMENT MANUFACTURER.
7. PERFORM AND RECORD ENGINE MANUFACTURER'S RECOMMENDED CHECKS AND INSPECTIONS.

MECON LTD. Delhi

@MECON Limited; all rights reserves

Client and EPMC LOGO	INSPECTION REPORT FOR BUSDUCT		
Contractor LOGO	PROJECT:	**JOB ID**	
	CLIENT:	**DOC ID**	
	EPMC:		
	CONTRACTOR:	**REV**	
LOCATION/ AREA:		**REPORT NO**	
		DATE	
SL NO	**ACTIVITY**	**INSPECTION STATUS**	**REMARKS**
1	Ensure that the switch board terminal box & the transformer terminal boxes are inspected & cleard before proceeding to the busduct installation.		
2	Check the equipment no. And rating as per drawings, no physical damage etc.		
3	Check availability of all accessories		
4	Inspect the bus duct insulators for any physical damage occured during the transit.		
5	Check bushing cracks,chips or presence of dirt. Bushing cleaned as per vendor's instruction		
6	Ensure various section of bust duct enclosures are coupled togetherby using proper gaskets & bellow as specified.		
7	Ensure the busbar are properly fixed & coupled on the Insulator and correct phase are connected at both ends.		
8	Ensure bus bar joints are insulated using manufacturers recommended materials, wherever required.		
9	Prior to closing of the bus duct cover, ensure that the bus duct enclosure are cleared of tool/ loose materials and debris.		
10	Ensure enclosure of bus duct & support structures earthed(to the earthing grid) as per drawing.		
Remarks			
For(contractor Name)		**For (EPMC/Client)**	
Name		Name	
Sign		Sign	
Date		Date	

@MECON Limited; all rights reserves

Client and EPMC LOGO	INSULATION RESISTANCE & TEST OF BUSDUCT														
Contractor LOGO	PROJECT:										**JOB ID**				
	CLIENT:										**DOC ID**				
	EPMC:														
	CONTRACTOR:										**REV**				
LOCATION/ AREA:											**REPORT NO**				
											DATE				
Megger detail	Make			serial no.				Model			**Calibration due date**				
Bus Bar	**Insulation Resistance in M.OHMS**										**Applied Voltage**	**Continuity**	**Remark**		
	R-E	**Y-E**	**B-E**	**R-Y**	**Y-B**	**B-R**	**R-N**	**Y-N**	**B-N**	**N-E**					
Section															

2. TORQUE TEST

Joints has been tightened and Torqued at .....Nm

Ensure the bus bar are properly fixed and coupled on the insulators and correct phases are connected at both ends.

3. SPACE HEATER

Temperature setting of Thermostat

Load current of SH

.....

Functional Check Ok/ Not Ok

Remarks

For(contractor Name)	For (EPMC/Client)
Name	Name
Sign	Sign
Date	Date

@MECON Limited; all rights reserves

Client and EPMC LOGO	INSPECTION REPORT FOR DISTRIBUTION TRANSFORMER		
Contractor LOGO	PROJECT:	**JOB ID**	
	CLIENT: EPMC:	**DOC ID**	
	CONTRACTOR:	**REV**	
LOCATION/ AREA:		**REPORT NO**	
		DATE	

PRELIMINARY CHECKOUT

SL NO	ACTIVITY	INSPECTION STATUS	REMARKS
1	Proper installation and alignment of 2 Pole structure		
2	Proper installation and alignment of Transformer and its accessories		
3	Checking the proper connection and wiring.		
4	Proper cleanliness of the transformer		
5	Check the proper earthing of the structure (doubly Earthed)		
6	IR check of incoming and outgoing cables.		
7	Check the proper tightness		
8	BVD Test		
9	Check the operation and function		
10	check for the proper cable Tags		
Remarks			

For(contractor Name)	For (EPMC/Client)
Name	Name
Sign	Sign
Date	Date

@MECON Limited; all rights reserves

Client and EPMC LOGO	INSPECTION REPORT FOR MOTORS							
Contractor LOGO	PROJECT:					**JOB ID**		
	CLIENT:					**DOC ID**		
	EPMC:							
	CONTRACTOR:					**REV**		
LOCATION/ AREA:						**REPORT NO**		
						DATE		
Megger Used for HT	Make		serial no.		Model		**Calibration due date**	
Megger Used for LT	Make		serial no.		Model		**Calibration due date**	

Sl No.	**Terminal Under Test**	**IR Value(In M.OHMS)**	**Remarks**
1	R-E,YB Earthed		
2	Y-E,RB Earthed		
3	B-E,YR Earthed		
4	R-Y		
5	Y-B		
6	B-R		

Sl No.	**P.I FOR HT MOTORS**	**IR Value after 1 Minutes(in M OHMS)**	**IR Value after 10 Minutes(in M OHMS)**	**PI Value (for HT Motors)**

Winding resistance for Motor

Sl No.	**Motor Tag No.**	**Terminal of Equipment**	**Motor winding resistance**
		U1-V1	
		V1-Y1	

@MECON Limited; all rights reserves

		Y1-U1		

Pre Commissioning & Operation check:	
a) Direction of rotation (If incorrect reverse the lead and correct terminal coding)	.....
b) Starting Current (Kick)	. .....
c) Operation of control & signalling circuit	.....

AT NO LOAD RUN

Time	Motor Volatge			Motor Current			RPM	Bearing Temp.	Body/Winding temp.	Any abnormal Noise	Vibrations		
	R-Y	Y-B	B-R	R	Y	B					Horizontal	Vertical	Axial

AT ON LOAD RUN

Time	Motor Volatge			Motor Current			RPM	Bearing Temp.	Body/Winding temp.	Any abnormal Noise	Vibrations		
	R-Y	Y-B	B-R	R	Y	B					Horizontal	Vertical	Axial

Remarks

For(contractor Name)	For (EPMC/Client)
Name	Name
Sign	Sign
Date	Date

MECON LTD, Delhi

@MECON Limited; all rights reserves

Client and EPMC LOGO	INSPECTION REPORT FOR BURRIED CABLE TRENCH		
Contractor LOGO	PROJECT:	JOB ID	
	CLIENT:	DOC ID	
	EPMC:		
	CONTRACTOR:	REV	
LOCATION/ AREA:		REPORT NO	
		DATE	

SL NO	CABLE ROUTE		CABLE Tag No.	Buried Trench Dimension in mm			Dressing / Sand bedding	Route mark/ Cable tag	Brick Covering	Remark
	FROM	TO		Length	Width	Depth				
1										
2										
3										
4										
5										
6										
7										
8										
9										
10										

Remarks

For(contractor Name)	For (EPMC/Client)
Name	Name
Sign	Sign
Date	Date

MECON Delhi

@MECON Limited; all rights reserves

Client and EPMC LOGO	INSULATION RESISTANCE & CONTINUITY TEST (PRE LAYING / POST LAYING OF CABLE)		
Contractor LOGO	PROJECT:	JOB ID	
	CLIENT:	DOC ID	
	EPMC:		
	CONTRACTOR:	REV	
LOCATION / AREA:		REPORT NO	
		DATE	
Megger detail	Make serial no. Model	Calibration due date	

SL NO	CABLE Tag	Type	Size	Voltage Grade	Insulation Resistance in M.OHMS								Continuity	Remark
					R-E	Y-E	B-E	R-Y	Y-B	B-R	RYB-N	N-E		
1														
2														
3														
4														
5														
6														
7														
8														
9														
10														
Remarks														

For(contractor Name)	For (EPMC/Client)
Name	Name
Sign	Sign
Date	Date

@MECON Limited; all rights reserves

Client and EPMC LOGO	INSPECTION REPORT FOR CABLE LAYING					
Contractor LOGO	PROJECT:			**JOB ID**		
	CLIENT: EPMC:			**DOC ID**		
	CONTRACTOR:			**REV**		
LOCATION/ AREA:				**REPORT NO**		
				DATE		
SL NO	**CABLE TAG**	**SIZE OF CABLE**	**FROM**	**TO**	**LAID LENGTH Mtr's**	**REMARKS**
1						
2						
3						
4						
5						
6						
7						
8						
9						
10						
Remarks						

For(contractor Name)	**For (EPMC/Client)**
Name	Name
Sign	Sign
Date	Date

MECON LTD. Delhi

@MECON Limited; all rights reserves

Client and EPMC LOGO	INSPECTION REPORT FOR INSTALLATION CABLE TRAY SUPPORT		
Contractor LOGO	PROJECT:	JOB ID	
	CLIENT:	DOC ID	
	EPMC:		
	CONTRACTOR:	REV	
LOCATION/ AREA:		REPORT NO	
		DATE	

SL NO	ACTIVITY	INSPECTION STATUS	REMARKS
1	Check proper installation of Cable tray		
2	Check proper painting of cable tray support before and after installation.		
3	Check proper installation of cable tray.		
4	Check routing of tray as per layout.		
5	IR check		
6	Check function and operation		

SLNO	Size of tray/ Structural Steel	Lengths (Mtrs)	Area	Remarks

Remarks	
For(contractor Name)	For (EPMC/Client)
Name	Name
Sign	Sign
Date	Date

@MECON Limited; all rights reserves

Client and EPMC LOGO	INSPECTION REPORT FOR INSTALLATION OF INTERNAL LIGHTING			
Contractor LOGO	PROJECT:	JOB ID		
	CLIENT:	DOC ID		
	EPMC:			
	CONTRACTOR:	REV		
LOCATION/ AREA:		REPORT NO		
		DATE		

S. No	Inspection Item	Inspection status	Remarks
1	Check proper installation of light fixtures, type, model & mounting.		
2	Check proper installation of Switches/Sockets.		
3	Check proper installation & Cable Dressing of fixture & LDB etc.		
4	Check proper earthing with light fixtures & DBs.		
5	Check the operation of light fixture with lighting DB.		
6	Check proper installation of exhaust fan & ceiling fans.		
7	Check emergency light and its operation as per drawing		
8	Check Lux level		
9	No. of Fixtures and switchgears		

S. No.	Area/Location	Type of Fixture	Qty.	Remarks

Remarks	
For(contractor Name)	For (EPMC/Client)
Name	Name
Sign	Sign
Date	Date

@MECON Limited; all rights reserves

Client and EPMC LOGO	INSPECTION REPORT FOR INSTALLATION OF EXTERNAL LIGHTING		
Contract or LOGO	PROJECT:	JOB ID	
	CLIENT:	DOC ID	
	EPMC:		
	CONTRACTOR:	REV	
LOCATION/ AREA:		REPORT NO	
		DATE	

S. No	Inspection Item	Inspection status	Remarks
1	Check type, model, and area classification of fixture.		
2	Check proper installation of light pole.		
3	Check proper installation of light fixtures & JB		
4	Check proper installation of FLP Junction Box.		
5	Check proper earthing with pole, light fixture & JB		
6	Check glanding of cables, tightness, size, type, etc.		
7	Measurement of circuit current at OLDB		
8	Check cable IR drop at LDB before charging		
9	Check proper installation of cable gland		
10	Check proper termination of cable in junction box		

S. No.	Area/Location	Type of Fixture	Qty.	Remarks

Remarks

For(contractor Name)	For (EPMC/Client)
Name	Name
Sign	Sign
Date	Date

@MECON Limited; all rights reserves

Client and EPMC LOGO	INSPECTION REPORT FOR INSTALLATION OF HIGH MAST			
Contractor LOGO	PROJECT:	JOB ID		
	CLIENT: EPMC:	DOC ID		
	CONTRACTOR:	REV		
LOCATION/ AREA:		REPORT NO		
		DATE		

S. No	Inspection Item	Inspection status	Remarks
1	Check proper installation of High Mast		
2	Check proper installation of light fixtures		
3	Check proper installation of Feeder Panel.		
4	Check proper earthing of High Mast, Feeder Panel		
5	Check operation of High Mast in Auto/ manual mode Including the operation of carriage		
6	Check lightning protection system of High Mast		

S. No.	Area/Location	Type of Fixture	Qty.	Remarks

Remarks	
For(contractor Name)	**For (EPMC/Client)**
Name	Name
Sign	Sign
Date	Date

@MECON Limited; all rights reserves

Client and EPMC LOGO	INSPECTION REPORT FOR INSTALLATION OF SWITCH/SOCKET/FAN		
Contractor LOGO	PROJECT:	**JOB ID**	
	CLIENT: EPMC:	**DOC ID**	
	CONTRACTOR:	**REV**	
LOCATION/ AREA:		**REPORT NO**	
		DATE	

S. No	Inspection Item	Inspection status	Remarks
1	Check proper installation of exhaust fan & ceiling fans.		
2	Check proper installation of Switches / Sockets, modular boxes, Switch boards.		
3	Check proper installation & Cable Dressing of LDB, wiring etc.		
4	Check proper earthing with light fixtures & DBs, sockets & Fans		
5	Check operation of Switch, Sockets& Fans		
6	Check proper operation of emergency lights		

S. No.	Area/Location	Type of Fixture	Qty.	Remarks

Remarks	
For(contractor Name)	**For (EPMC/Client)**
Name	Name
Sign	Sign
Date	Date

@MECON Limited; all rights reserves

Client and EPMC LOGO	INSPECTION REPORT FOR CONDUITING IN SLAB/ WALL & WIRING		
Contractor LOGO	PROJECT:	JOB ID	
	CLIENT:	DOC ID	
	EPMC:		
	CONTRACTOR:	REV	
LOCATION/ AREA:		REPORT NO	
		DATE	

PRELIMINARY CHECKOUT			
SL NO	**ACTIVITY**	**INSPECTION STATUS**	**REMARKS**
1	**CONDUITING**		
1.1	Virtual check of material (IS-Certified)		
1.2	Routing of conduit and location of junction box		
1.3	Proper binding of conduit with steel bar and burr removed from conduit and putting small pieces of bag inside junction box.		
2	**WIRING**		
2.1	Identification of circuit check		
2.2	Check the size of wire and colour code		
2.3	Check earthing Continuity		
2.4	Insulation Test		
2.5	Check continuity of wire		
2.6	Earthing of switch box		
Remarks			

For(contractor Name)	For (EPMC/Client)
Name	Name
Sign	Sign
Date	Date

@MECON Limited; all rights reserves

Client and EPMC LOGO	INSPECTION REPORT FOR EARTHING		
Contractor LOGO	PROJECT:	**JOB ID**	
	CLIENT: EPMC:	**DOC ID**	
	CONTRACTOR:	**REV**	
LOCATION/ AREA:		**REPORT NO**	
		DATE	

PRELIMINARY CHECKOUT			
SL NO	**ACTIVITY**	**INSPECTION STATUS**	**REMARKS**
1a	Earth electrode , Pit & their connection are to be checked for proper installation		
1b	Earth electrode resistance test		
2	Check all connection for proper tightness.		
3	Check the test facility shall be provided with test links for earthing system		
4	Check the dimension of earth strip & bitumen application.		
5	Check the welding and cleanliness of earth strip		
6	Earth resistance of earth electrode and grid		
7	Continuity test for earthing conductor		
8	Paint of epoxy on earthing joints.		
9	check no earth pit, marking of measured value		
Remarks			

For(contractor Name)	**For (EPMC/Client)**
Name	Name
Sign	Sign
Date	Date

@MECON Limited; all rights reserves

Client and EPMC LOGO	INSPECTION REPORT FOR EARTH RESISTANCE TEST			
Contractor LOGO	PROJECT:		**JOB ID**	
	CLIENT:		**DOC ID**	
	EPMC:			
	CONTRACTOR:		**REV**	
LOCATION/ AREA:			**REPORT NO**	
			DATE	

SL NO	**AREA/LOCATION**	**EARTH PIT NO.**	**EARTH RESISTANCE**		**REMARKS**
			WITH GRID	**WITHOUT GRID**	
1					
2					
3					
4					
5					
6					
7					
8					
9					
10					
Remarks					

For(contractor Name)	**For (EPMC/Client)**
Name	Name
Sign	Sign
Date	Date

@MECON Limited; all rights reserves

Client and EPMC LOGO	INSPECTION REPORT FOR LIGHTNING PROTECTION		
Contractor LOGO	PROJECT:	**JOB ID**	
	CLIENT:	**DOC ID**	
	EPMC:		
	CONTRACTOR:	**REV**	
LOCATION/ AREA:		**REPORT NO**	
		DATE	

PRELIMINARY CHECKOUT

SL NO	ACTIVITY	INSPECTION STATUS	REMARKS
1	Check all materials are as per approved IC or IWC report/ Specified Tender standards.		
2	Check the routing of down conductor should be straight as possible, Following the shortest path,aviding the sharp bents or upward sections.		
3	Check bending radii should not less than 20 cm or 90 degree.		
4	Check Lighting rod at least connected with two down Conductors.		
5	Check all the receiving antennas (TV , Radio, Telephone) should be connected with Lighting protection system with proper conductors.		
6a	Earth electrode , Pit & their connection are to be checked for proper installation		
6b	Earth electrode resistance test		
7	Check all connection for proper tightness.		
8	Check the test facility shall be provided with test links for earthing system and for periodic inspection.		
9	Check the dimension of earth strip & bitumen application.		
10	Check the welding and cleanliness of earth strip		
11	Earth resistance of earth electrode and grid		
12	Paint of epoxy on earthing joints.		
13	check no earth pit, marking of measured value		

Remarks

For(contractor Name)	For (EPMC/Client)
Name	Name
Sign	Sign
Date	Date

@MECON Limited; all rights reserves

Client and EPMC LOGO	INSPECTION REPORT FOR LIGHTING RESISTANCE TEST				
Contractor LOGO	PROJECT:		JOB ID		
	CLIENT:		DOC ID		
	EPMC:				
	CONTRACTOR:		REV		
LOCATION/ AREA:			REPORT NO		
			DATE		

SL NO	AREA/LOCATION	EARTH PIT NO.	EARTH RESISTANCE		REMARKS
			WITH GRID	WITHOUT GRID	
1					
2					
3					
4					
5					
6					
7					
8					
9					
10					

Remarks	
For(contractor Name)	**For (EPMC/Client)**
Name	Name
Sign	Sign
Date	Date

MECON LTD, Delhi

@MECON Limited; all rights reserves

Client and EPMC LOGO	INSPECTION REPORT FOR BATTERY AND BATTERY CHARGER		
Contractor LOGO	**PROJECT:**	**JOB ID**	
	CLIENT:	**DOC ID**	
	EPMC:		
	CONTRACTOR:	**REV**	
LOCATION/ AREA:		**REPORT NO**	
		DATE	

PRELIMINARY CHECKOUT

SL NO	ACTIVITY	INSPECTION STATUS	REMARKS
1	Proper alignment of Battery Charger		
2	Checking the proper connection/wiring		
3	Check the cleanliness inside the Battery Charger.		
4	Check for proper earthing		
5	IR check		
6	Check function and operation		

Remarks

For(contractor Name)	For (EPMC/Client)
Name	Name
Sign	Sign
Date	Date

MECON LTD. Delhi

@MECON Limited; all rights reserves

Client and EPMC LOGO	INSPECTION REPORT FOR UPS		
Contractor LOGO	**PROJECT:**	**JOB ID**	
	CLIENT:	**DOC ID**	
	EPMC:		
	CONTRACTOR:	**REV**	
LOCATION/ AREA:		**REPORT NO**	
		DATE	

PRELIMINARY CHECKOUT

SL NO	ACTIVITY	INSPECTION STATUS	REMARKS
1	Proper alignment of UPS		
2	Checking the proper connection/wiring		
3	Check the cleanliness inside the panel.		
4	Proper earthing of panel (doubly earthed)		
5	IR check and HV		
6	Check function and operation		
7	Voltage Measurement Between P-N/P-E/N-E		

Remarks

For(contractor Name)	For (EPMC/Client)
Name	Name
Sign	Sign
Date	Date

MECON LTD. Delhi

@MECON Limited; all rights reserves

Client and EPMC LOGO	INCOMING MATERIAL INSPECTION REPORT		
Contractor LOGO	PROJECT:	**JOB ID**	
	CLIENT: EPMC:	**DOC ID**	
	CONTRACTOR:	**REV**	
LOCATION/ AREA :		**REPORT NO**	
		DATE	

Sr. No.	SOR No.	Description of Material	Size	Batch No.	Quantity	Manufacturer Name	Date of Receipt	IRN/TC	Remarks
1									
2									
3									
4									
5									

The above material inspected and found satisfactory for execution.

For(contractor Name)	For (EPMC/Client)
Name	Name
Sign	Sign
Date	Date

****

MECON LTD, Delhi

@MECON Limited; all rights reserves

REV: 0
EDITION: 3

TECHNICAL SPECIFICATION

FOR

Ni Cd BATTERY

DOCUMENT No. : MEC/05/E9/TS/17

Prepared & Issued by

ELECTRICAL SECTION
(Oil & Gas SBU)
MECON LIMITED
(A Govt. of India Undertaking)
13th& 15th Floor, North Tower, SCOPE MINAR,
Laxmi Nagar District Centre,
Delhi-110092 (India)

@MECON Limited; all rights reserves

MECON LTD, Delhi

INDEX

Sl. No.	Description	Page No
01.00	Intent	04
02.00	Codes & Standards	04
03.00	General Requirements	04
04.00	Technical Requirements	05
05.00	Drawings and Documents	05
06.00	Technical Specifications	05
07.00	Inspection and Testing	16
8.00	Packing and Despatch	16

Rev	Date	Prepared by	Checked by	Approved by
0	11.07.2025	Aashish Moyal	Saurabh Singh	Pankaj Shrivastava

© Copyright MECON Limited – All rights reserved.
THIS DOCUMENT IS THE SOLE PROPERTY OF MECON AND ISSUED FOR THE SPECIFIC PROJECT MENTIONED HEREIN. THIS IS NOT TO BE COPIED OR USED FOR ANY OTHER PROJECTS UNLESS EXPLICITLY PERMITTED BY MECON.

@MECON Limited; all rights reserves

MECON LTD, Delhi

AMENDMENT STATUS

(OLD NUMBER OF STANDARD: MEC/TS/05/E9/17)

Sl. No.	Clause / Paragraph / Annexure / Exhibit / Drawing Amended	Page No.	Revision	Date	By (Name)	Verified (Name)
1	Document Number replaced with New number as **MEC/05/E9/TS/17**	All	Rev 0/ Ed 3	11.07.2025		
2	Section re-name as Electrical Section (Oil & Gas SBU) Delhi	All	Rev 0/ Ed 3	11.07.2025		

MECON LTD, Delhi

1.0 INTENT

@MECON Limited; all rights reserves

The intent of this specification is to define the requirement of Nickel – Cadmium batteries and its accessories for the UPS/solar power system. The scope of work includes design, manufacture and testing of Nickel – Cadmium batteries as per specification and datasheet.

2.0 CODES AND STANDARDS

The equipment shall comply with the requirements of latest revision of following standards of

a) Bureau of Indian Standards (BIS) IS-10918
b) British Standard Institution
c) American Standard Institution
d) International Electro Technical Commission
e) IEEE
f) NEMA

2.1 The equipment shall also conform to the provisions of Indian Electricity Rules and other statutory regulations currently in force in the country.

2.2 Wherever the requirements in this specification are in conflict with any of the above Standards, the requirements under this specification shall be binding.

3.0 GENERAL REQUIREMENTS

3.1 Ni-Cd Batteries

The offered Battery shall be brand new with sate of art technology and proven field track record.

3.1.1 Basic Particulars for Design

a) SITE CONDITIONS

Nickel Cadmium battery shall be suitable for operating satisfactorily in humid corrosive atmosphere found in gas processing plants. Atmospheric conditions/Site conditions are specified in the scope of work/Datasheet.

4.0 TECHNICAL REQUIREMENTS

4.1 The Nickel Cadmium cell / battery shall be suitable for float duty operation at constant voltage permanently applied to its terminals which is sufficient to maintain it in a state close to full charge and shall be designed to supply load in the event of normal power supply failure. Battery shall be Fiber Plate or Pocket Plate Type.

4.2 Supplier shall carry out battery sizing calculations based on load as specified and in line with IEEE-1115, The same shall be submitted to owner/consultant for approval. For long duration discharge, like SPV

@MECON Limited; all rights reserves

MECON LTD, Delhi

system, the selection of batteries shall be as per relevant IEC/IEEE.

4.3 Ampere-hour capacity of the battery shall be selected on the following basis:

a) The nominal voltage of single cell be 1.2V
b) Load power factor of 0.8
c) Aging factor of 0.8
d) Battery state of charge factor of 0.88
e) Minimum ambient temperature as specified in data sheet
f) **Backup time as specified in data sheet**
g) Minimum end cell voltage shall be 1.1V per cell for Ni-Cd battery
h) Depth of discharge (DOD) as specified in data sheet

4.4 The number of cells shall be determined as per load and system voltage level as specified in data sheet.

4.5 Battery shall be supplied in single bank of 100% capacity or two parallel banks of 50% capacity each as specified in data sheet/block-diagram. The battery shall be suitable for being boost charged to fully charged condition from fully discharged condition within 10 hours unless other wise specified.

4.6 Battery assembly shall be supplied in dry and uncharged condition. Electrolyte with 10% extra quantity shall be delivered with the battery in a suitable, non-returnable, sealed containers.

4.7 Each cell shall have a separate container. The cell shall be housed in high strength impact resistant & alkali resistant container and should be transparent/translucent material and designed to withstand mechanical stresses, shocks and vibrations.

4.8 The components such as containers, lids/ covers and seals used in the manufacture shall be the fire, flame and smoke resistant.

4.9 The terminal post shall be nickel-plated. The terminals shall be suitable for short circuit current and specified discharge current without damage to cell as a result of terminal heating.

4.10 Nickel cadmium cells shall be designed to withstand the mechanical stresses encountered during normal transportation and handling. The battery shall be suitable for satisfactory operation at remote unattended sites. The batteries shall need minimum maintenance. The battery shall be installed in battery room having restricted ventilation.

4.11 A Flame arrestor shall be mounted on the cell so that all vented gasses diffuse through the arrestor to the outside environment. The construction of the arrestor shall be such that hydrogen burning on the external surface of the arrestor shall not propagate back in to the cell to cause explosion.

4.12 The following information shall be permanently marked on the cell:

@MECON Limited; all rights reserves

a) Name of manufacturer/model reference
b) Nominal voltage
c) Rated capacity in ampere hours (Ah) with End Cell voltage
d) Voltage for float operation of 27 deg C with tolerance of 1%
e) Month and year of manufacture
f) Polarity Marking

4.13 Each set of battery shall be supplied with all accessories including but not limited to the following:

a. Battery stands in Step and tier formation as per data sheet
b. Inter cell, inter row and inter bank connectors and end take offs. These shall be of Nickel-plated copper, Connector covers.
c. Cell number plates and fixing pings, connecting cables, Lugs for cable termination as required and Bolt & washers, Top up bottle, Thermometer-1 no.
d. Manufacturer shall supply the copy of instruction manual for commissioning, initial treatment of battery & maintenance
e. One number Cell testing voltmeter (3V-0-3-V) complete with leads
f. Four pairs of Rubber gloves, Cell lifting puller-1 no.
g. One number Spanner.
h. Any other accessories.

5.0 DRAWINGS AND DOCUMENTS

The following documents shall be submitted along with the offer

a) Battery sizing calculation
b) Dimension of battery bank and each cell offered.
c) Dimension /GA of battery stand
d) Catalogue

6.0 INSPECTION AND TESTING

Batteries shall be subject to inspection by Consultant / Owner or by a third agency authorized by the owner for acceptance. Nickel Cadmium batteries shall be type tested to meet the performance requirements for each design and AH raring of cells as per IS 10918. Type test reports/certificates shall be submitted for review.

Battery shall be tested for 'Acceptance test' as per IS 10918 at manufacturer works for the acceptance of batteries.

Load test shall be carried out on the Battery at site after installation as part of commissioning.

7.0 PACKING AND DESPATCH

@MECON Limited; all rights reserves

MECON LTD, Delhi

The equipment shall be properly packed for transportation by ship / rail or trailer. The equipment shall be wrapped in polythene sheets before being placed in crates / cases to prevent damage. Crates / cases shall have skid bottoms for handling. Special notations such as “Fragile’, “This side up” “Centre of gravity”, “’Weight’, “Owner’s particulars”, ‘PO nos.”’ etc, shall be clearly marked on the package together with other details as per purchase order. Contractor shall supply above packed material at required place as specified elsewhere.

****

MECON LTD, Delhi

@MECON Limited; all rights reserves

Rev.: 2
Edition: 1

SPECIFICATION

FOR

SOLAR PHOTO VOLTAIC (SPV)

POWER SUPPLY SYSTEM

SPECIFICATION NO. - MEC/TS/05/E9/078

(ELECTRICAL SECTION)
MECON LIMITED
DELHI 110 092

MECON LIMITED REGD. OFF: RANCHI 834002	STANDARD TECHNICAL SPECIFICATION ELECTRICAL SECTION, DELHI		
TITLE	SOLAR PHOTO VOLTAIC (SPV) POWER SUPPLY SYSTEM	DOCUMENT NO. MEC/TS/05/E9/078	Page 1 of 1 REVISION: 2 EDITION: 1

CONTENTS

1.0 SCOPE

2.0 STANDARDS

3.0 GENERAL REQUIREMENTS

4.0 SOLAR PHOTOVOLTAIC MODULES

5.0 ESSENTIAL FEATURE OF THE SOLAR MODULES/STRING/SUB-ARRAY/ARRAY

6.0 SOLAR CHARGE CONTROLLER

7.0 BATTERY UNIT

8.0 415V AC 3 PH CHARGER & PCU-MPPT INVERTER

9.0 DISTRIBUTION BOARDS

10.0 INTERCONNECTING CABLES

11.0 JUNCTION BOXES

12.0 ARRAY SUPPORTING STRUCTURE

13.0 EARTHING SYSTEM

14.0 SOLAR STREET LIGHTING SYSTEM

15.0 DRAWING AND DOCUMENTS

16.0 INSPECTION

ANNEXURE-I PURCHASER'S DATA FOR SOLAR SYSTEM

ANNEXURE-II TECHNICAL DATA FROM MANUFACTURER FOR SOLAR SYSTEM

ANNEXURE-III TECHNICAL DATA FROM MANUFACTURER FOR SOLAR STREET LIGHTING SYSTEM

ANNEXURE-IV CHECK LIST (To be submitted up by the successful bidder)

PREPARED BY:	Checked By:	APPROVED BY:	ISSUE DATE :
(Aashish Moyal)	(Saurabh Singh)	(D.K. Pande)	Nov, 2009

AMENDMENT STATUS

Sl. No.	Clause / Paragraph / Annexure / Exhibit / Drawing Amended	Page No.	Revision	Date	By (Name)	Verified (Name)
1	Revised & Re-Issued as Standard Specification	-	1	05.06.2011	AM	DGM
2	Revised & Re-Issued as Standard Specification	-	2	28.08.2018	AM	DGM

1.0 SCOPE

The intent of this specification is to define the requirements of solar power supply system and the associated battery sets, solar street lighting system. Tenderer's scope of work includes design, manufacture, testing, packing, storage, delivery to site, installation, earthing, testing & commissioning of the complete Solar system with solar array, charge controllers, battery banks, 3 Ph chargers, DC-DC converters, Distribution boxes, interconnecting cables etc as per this specification, data sheets that meet the critical load requirement.

2.0 STANDARDS

1) IS-12762 (Pt.1) 2010-Photovoltaic devices: Part 1. Measurement of PV current and voltage characteristics.
2) IS-12762 (Pt.2): 2013- Photovoltaic devices: Part 2: Requirement for reference solar cells.
3) IS -12763:2013 Procedure for temperature and irradiance correction to measure I-V characteristics of crystalline silicon PV devices.
4) IS- 12834: 1989: Solar photovoltaic energy system-Terminology.
5) IS- 14153:1994 Guide for General Description of Photovoltaic (PV) Power Generating System.
6) IS-4244: 1995: Characteristics parameters of stand alone photovoltaic (PV) system.
7) IS-14286: 2010: Crystalline Silicon Terrestrial Photovoltaic (PV) modules - Design Qualification And Type Approval
8) IEC 61215: PV module design and type approval
9) IEC 62259: Battery Bank (Ni-Cd)
10) IS-1554:1988 Specification for PVC insulated (heavy duty) electric cables.
11) IS-3043:1987 Code of practice for earting.
12) IEC: 62257-Recommendations for small renewable energy and hybrid systems for rural electrification
13) IEC: 61427- Secondary cells and batteries for photovoltaic energy systems (PVES) – General requirements and methods of test
14) IEC: 62257-Selection of batteries and battery management systems for stand-alone electrification systems – Specific case of automotive flooded lead-acid batteries available in developing countries
15) IEC: 60364-Requirements for special installations or locations – Solar photovoltaic (PV) power supply systems
16) IEC: 61386- Solar photovoltaic energy systems – Terms, definitions and symbols
17) IEC: 62124- Photovoltaic (PV) stand-alone systems – Design verification
18) IEC: 60904- Measurement of photovoltaic current-voltage characteristics
19) IEC: 61727- Photovoltaic (PV) systems-Characteristics of the utility interface
20) IEC: 62116- Test Procedure of islanding prevention measures of utility-interconnected photovoltaic inverters
21) IEC: 60068- Environmental test
22) IS/IEC 61730 (Part 1 & Part 2) : 2004 Photovoltaic (PV) Module Safety Qualification Part 1 Requirements for Construction Photovoltaic (PV) Module Safety Qualification Part 2 Requirements for Testing
23) IS 16221 (Part 1) : 2016 IS 16221 (Part 2) : 2015 Safety of Power Converters for use in Photovoltaic Power Systems Part 1- General Requirements Safety of Power Converters for Use in Photovoltaic Power Systems Part 2-Particular Requirements for Inverters
24) IEC 62446 Grid connected photovoltaic systems – Minimum requirements for system documentation, commissioning tests and inspection
25) SP 30 : 2011 National Electrical Code (first revision)
Note- Latest edition of all applicable standards shall be considered.

Abbreviations

PV	-	Photo Voltaic
ELV	-	Extra low Voltage
LV	-	Low Voltage
VOC MOD	-	Module Open Ckt Voltage
VOC ARRAY	-	Array Open Ckt Voltage
VOC STC	-	Module Open Ckt Voltage at STC
Isc MOD	-	Module Short Circuit Current
Isc ARRAY	-	Array Short Circuit Current
AC	-	Alternating current
DC	-	Direct current
NOCT	-	Nominal operating cell temperature
STC	-	Stand testing conditions

3.0 GENERALREQUIREMENTS

3.1 SOLAR POWER SYSTEMS FOR

I. Cathodic Protection, Telecom, SCADA, Instrumentation, F A system & CO_2 Flooding system.
II. Outdoor lighting (Stand-alone solar street lighting poles)
III. On-Grid System

3.2 BASIC PARTICULARS FOR DESIGN

Basic Details

- Suitable for industrial application.
- The system shall be designed as per Schedule of Quantity/MR at 50°C /2 °C ambient and load specified.
- The charge controller must be of Maximum Power Point Tracking (MPPT) type and shall be capable to charge the battery from SPV array & simultaneously feed the load.
- Battery shall be suitable to store the energy as per specified autonomy.
- DC-DC Converters as per data sheet & drawing.
- DC Distribution boards as per data sheet.
- Interconnecting cables & Equipments earthing- Cu plate type.

System Voltage

Differences of potential normally existing between conductors and between conductors and earth as follows:

a) Extra-low voltage: not exceeding 50 V a.c. or 120 V ripple-free d.c.;
b) Low voltage: exceeding extra-low voltage, but not exceeding 1 000 V a.c. or 1500 V d.c.
c) High voltage: exceeding low voltage.

NOTE In consideration of ELV status, V_{OC} ARRAY must be used.

Voltage domain for PV array

Voltage domain	Voltage (volts)	
	Alternating current	Smoothed direct current
ELV	*Un ≤ 50 V*	*Uoc ≤ 120 V*
LV	*50 V < Un ≤ 1000 V*	*120 V < Uoc ≤ 1500 V*

Batteries in systems

Batteries in PV systems can be a source of high prospective fault currents. The location of fault current protection related to battery systems is generally between the battery and charge controller and as close as practical to the battery. This protection can be used to provide overcurrent protection for PV array cables provided the PV array cable is rated to withstand the same current as the battery overcurrent protection device.

Accordingly, the system shall be designed & The value of effective/prospective fault current shall be calculated & the calculation shall be submitted during the approval of the design document.

NOTE- The current rating of string cables must be much higher in battery systems if no individual over current protection is provided. In this case, the nearest downstream over current protection may be the battery fuse.

Marking

Each PV module used in the solar power project must use a RF identification tag (RFID), which must contain the following information. The RFID can be inside or outside the module Laminate, but must be able to withstand harsh environmental conditions.

i) Name of the manufacturer of PV Module

ii)Name of the Manufacturer of Solar cells of PV Module

iii)Month and year of the manufacture (separately for solar cells and module).

iv) Country of origin (separately for solar cells and module)

v) I-V curve for the module

vi) Peak Wattage, Im, Vm and field factor (FF)for the module

vii)Unique Serial No. and Model No. of the module

viii) Date and year of obtaining IEC/BIS PV module qualification certificate

ix) Name of the test lab issuing IEC/BIS Certificate

x) Other relevant information on traceability of solar cells and module as per ISO 9000 series.

xi) Polarity of terminals or leads (colour coding is permissible as per standard practice);
xii) Maximum system voltage for which the module is suitable.

The date and place of manufacture shall be marked on the module or be traceable from the serial number.

Warranty of PV Module

The warranty of the solar module is the measurement of the power after a certain time of working, warranty of the Module should be for the 20 years @ 80% of guaranteed power output of Module at the time of purchase.

4.0 SOLAR PHOTOVOLTAIC MODULES

SPV modules manufactured using Crystalline Silicon solar cells shall be used for power generation. SPV modules should have excellent durability to withstand extreme temperature and weather conditions. The photovoltaic solar array, charge controller shall be sized to meet battery back-up, load cycle requirement (as per scope of work/PJS) of connected load with availability of solar energy. SPV array shall be connected in series-parallel combination to obtain required voltage and current rating of a solar module. However the rating of solar system shall not be less than as specified in SOR/MR.

5.0 ESSENTIAL FEATURE OF THE SOLAR MODULES/STRING/SUB-ARRAY/ARRAY

- Crystalline silicon cells shall be mono/poly Crystalline shall be used in solar module for power generation.
- Suitable for DC 96V/48V system
- Encapsulation of cells using UV stabilized polymer (EVA) and protective back cover using Tedler-Polyster-Tedler.
- High transmission toughened glass and anodized aluminium/hot dip galvanized Steel frame for mounting.
- Total dimensions of solar array panels shall be such that it can be accommodated in existing space/roof as indicated in data sheet.
- Solar module must comply with IEC 61215/IS:14286
- Bird spikes shall be provided to avoid bird setting on solar module/array.
- Solar module shall be able to withstand following environment conditions
  Wind Velocity –Min. 170 Km/Hr or as per site survey
  Max Relative Humidity – 98%
- Long service life (20 Years).

5.1 Protection against electric shock and fire- (As per IEC: 62257)

Protection by extra-low voltage systems shall be classified as Class III or better as per IEC.

For all other systems, protection by double or reinforced insulation between any live conductor and any earthed or exposed conductive part (i.e. Class II modules and double or reinforced insulation for the whole PV array) is required.

5.2 Protection against over current to be provided for Modules/Array/String/Sub Arrays-

Fault currents due to short circuits in modules, in junction boxes or in module wiring or earth faults in array wiring can result in overcurrent in a PV array. PV modules are current limited sources but because they can be connected in parallel and also connected to external sources (e.g. batteries), they can be subjected to over currents caused by either multiple parallel adjacent strings or from external sources or both.

The over current protection shall be provided as per IEC: 62257.

5.3 Protection against Lightning & Over-Voltages

The protection shall be provided as per IEC: 62257 & 62305.

When a PV array is protected by a lightning protection system, the metal structure of the PV array should be bonded to the lightning protection system, unless the minimum safety clearances as specified in IEC 62305-3 can be achieved.

5.4 Surge arresters

Surge arresters shall be provided for protecting electrical systems and equipment against over-voltages. When these devices are used the recommendations of IEC 61643-12 should be observed.

Over-voltage protection with surge arresters should be provided when the PV power system meets any of the following criteria:

a) Supply of critical loads (e.g. telecommunication repeater stations), or
b) The PV array has a rated capacity greater than 500 W, or
c) The PV array is protected with a lightning protection system.

Recommended specifications

The recommended specifications for surge arresters to protect PV arrays from over-voltages caused by indirect lightning strikes are as follows: (refer to list of parameters for surge arrester selection in IEC 61643-12:

a) Maximum continuous operating voltage (UC): $U_C > 1.3 \times V_{OC}$ STC GEN
b) Maximum discharge current (I max): I max ≥ 5 kA
c) Voltage protection level (Up): $U_C < Up < 1.1$ kV

6.0 SOLAR CHARGE CONTROLLER

A charge controller is an important system component that regulates the power generated from renewable energy system and charges the battery and simultaneously feed the load at specified voltage level. It should protect specified type of batteries from being over/under charged and ensures maximum battery life. Each Charge controller (2x100% PV capacity) shall be connected to respective PV panel and battery as shown in the Block drg attached so as to make whole system Parallel Redundant. Charger I/O is specified in Data sheet. Remote Monitoring of battery voltage & current, load Voltage & current, solar array Voltage & current, fault status and charging of battery from solar charger controller or grid charger, hook up with Owner's SCADA system through RS232/485.

- Charger size shall be based on the maximum Array capacity & Battery Bank Ah.
- Charger shall be MPPT type.
- Automatic and Manual boost and float charging control through Keypad/selector switch
- (The threshold for the Boost & Float charging shall be decided during the approval of the design documents as per the recommendation of the Battery Manufacturer)
- Provision to isolate individual battery bank from charge controller for maintenance purpose.
- Protection to Short circuit currents due to shadow & short-circuit shall be provided.

6.1 PROTECTIVE FEATURES- (As per manufacturer's standard however minimum are below)

- Maximum current limit (Over Load trip)
- Over Temperature Trip (Heat Sink Temp)
- Over charging Trip
- Boost charging and float charging current limiting (Adjustable from 10%-100% of the rating of the Charge controller) with back up protection against over charging & deep discharge of battery
- Protection against transient/surge.
- Battery open circuit protection.
- Protection against transient & surge
- Battery reverse polarity
- Reverse flow of power from battery to PV system
- Annunciation for deep discharge of battery [Through SCADA also]
- Provision for charging of battery from grid supply through grid charger automatically when no sun power is available or battery is deep discharged or provision of manually transfer on grid charger shall also be provided.
- Automatic/Manual selection of Float & Boost Mode.

6.2 INDICATIONS (As per manufacturer's standard)

All indications shall be LED type.

- Indication for charging by solar panels or by Grid power.
- Battery deep discharge/ Low Battery
- Float/Boost Charging
- Battery Full
- Battery Low
- Fuse failure
- As per the manufacturer standard

6.3 METERS (Digital Type)

- Load voltage and current
- PV Voltage and Current.
- MPPT Charger O/P amps /Battery Charging current
- MPPT Charger O/P Voltage
- Ah meter

6.4 CONSTRUCTIONAL FEATURES OF CHARGE CONTROLLER

1. Dust and vermin proof , IP-31 with forced cooling if required (Refer ambient condition as

mentioned in the specification/PJS).

2. Sheet steel clad
- Minimum 2 mm thick for panels
- Minimum 1.6 mm thick for doors and side covers

3. Units shall be self contained and serviceable.
4. The arrangement and layout shall facilitate easy and convenient supervision of the unit while running as well as quick detection of disturbances and troubleshooting.
5. Copper earth bus bar shall run through out the length of Panels. All doors & non-current carrying parts shall be suitably earthed.
6. Dimensions of panels shall be such that it can be accommodated in existing room if indicated in data sheet.
7. The maximum and minimum operating height of the switches shall be 1800mm and 300mm respectively.

6.5 ENCLOSURES AND VENTILATION

- Enclosure conforming to minimum IP-31 class.
- Units shall be provided with cooling fans with thermostat etc as per manufacturer's standard.

7.0 BATTERY UNIT

7.1 The battery shall be Ni-Cd type & in combination of two banks (Capacity shall be divided into two banks).

7.2 Ampere-hour capacity of the battery shall be selected on the following basis:

a) Aging factor of 0.8
b) Battery Depth of Discharge 0.7
c) Minimum ambient temperature as specified in data sheet
d) Backup time as specified in data sheet
e) Minimum end cell voltage/Cut Off shall be 1.1V per cell for Ni-Cd battery or as per manufacturer recommendation/As calculated from IEEE: 1115.
c) Battery calculations done as per IEEE:1115 standard
d) Capacity of the battery to conform C5 discharge rating

Sets of Indoor Stationary batteries of type as per enclosed data sheet complete with all required accessories as applicable shall be supplied with each battery set as specified in specification of Ni-Cd Batteries.

7.3 Overall dimensions of complete battery set shall be such that it can be accommodated in existing room, as indicated in data sheet.

8.0 FCBC CHARGER & PCU-MMPT INVERTER

8.1 FCBC CHARGER

Please refer specification of FCBC Charger MEC/TS/05/E9/28.

8.2 PCU-MMPT INVERTER

PCU / MPPT and 3 phase inverter shall be supplied as integrated unit depending upon the size of the solar power system. It should conform to IEC61683 and must additionally conform to the relevant national / international Electrical Safety Standards IEC60068 2. To minimize power losses, the PCU should be microprocessor based having inverter, which converts DC energy produced by the solar array to 3 phase AC energy. The combined wattage of all inverters should not be less than rated capacity of power plant under STC. Maximum power point tracker shall be integrated in the PCU/inverter to maximize energy drawn from the array.

a) PCU shall also house MPPT (Maximum Power Point Tracker), an interface between Solar PV array & the Inverter, to the power conditioning unit/inverter output should be compatible with the grid frequency.

b) The inverter shall have internal protection arrangement against any sustained fault in the feeder. The inverter shall have provision for input & output isolation.

c) Inverter shall be tested for islanding protection performance.

d) The PCU/solar inverter shall be capable of complete automatic operation, including wake-up, synchronization & shut down.

e) The software for performance monitoring of the system along with Laptop (at each plant) for remote monitoring (RS-485 serial communication, protocol-ModBus) and required hardware for interfacing the plant are to be supplied.

f) The PCU/ inverters should be type tested from the MNRE approved test centres / NABL /BIS /IEC accredited testing- calibration laboratories. In case of imported power conditioning units, these should be approved by international test houses.

TOOLS & TACKLES AND SPARES:

After completion of installation & commissioning of the power plant, necessary tools & tackles are to be provided free of cost by the bidder for maintenance purpose. List of tools and tackles to be submitted by Bidder for approval

A list of requisite spares in case of PCU/inverter comprising of a set of control logic cards, IGBT driver cards etc. Junction Boxes. Fuses, MOVs / arrestors, MCCBs etc along with spare set of PV modules be indicated, which shall be supplied along with the equipment.

9.0 DISTRIBUTION BOARDS

COSTRUCTION FEATURES-

9.1 MECHANICAL DESIGN-

a) Non-draw out type, floor mounted/wall mounted as specified in data sheet.

b) Sheet steel clad, front operation and maintenance type.
c) Minimum sheet steel thickness: Doors & covers – 2.0mm cold rolled for load bearing and 1.6mm for non load bearing members
d) Degree of protection IP 41.
e) Cable entry from bottom, 2mm thick removable and un-drilled gland plates
f) Tinned-Cu Bus Bar of suitable size.
g) No. of I/C and O/G MCB feeders with fuses as per data sheet.

9.2 INDICATIONS/METERS-

a) Voltmeter- (Incoming Voltage)
b) Ammeter- (Incoming Current)
c) Incomer supply ON (LED type)

10.0 INTERCONNECTING CABLES

- Cu conductor, XLPE insulated, PVC sheathed, armoured/unarmored, FRLS type cables as per relevant IS/IEC standard, used for interconnection among arrays, charge controller, battery bank, junction boxes and distribution boxes etc.
- IR/UV protected Cables shall be used. (Solar Grade)
- Double compression type cable glands, tinned Cu lugs, cable tags, cable marker for underground cables.
- Cable sizes for PV string cables, PV sub-array cables and PV array cable shall be determined with regard to both, the minimum current capacity and the maximum voltage drop requirements-

Voltage drop criteria-

It is recommended that under maximum load conditions the voltage drop from the most remote module in the array to the terminals of the application circuit should not exceed **1%** of the nominal system voltage for DC system & **2%** for AC system. The necessary voltage drop calculations to be submitted for approval.

Max. Current requirement Criteria-

- **Current carrying capacity (CCC)-**The minimum cable sizes for PV array wiring, based on CCC, shall be based upon a current rating calculated from below table, and the current carrying capacity of cables as specified in IEC 60287/ IS-7098/1554.

NOTE In some PV module technologies $I_{SC\ MOD}$ is higher than the nominal rated value during the first weeks or months of operation. This should be taken into account when establishing cable ratings.

Type of cable	Minimum current upon which cable cross sectional area should be chosen* **
PV string cable (PV string overcurrent protection not provided)	Trip current *** of the nearest downstream overcurrent protection device + 1.3 x Isc MOD x (SPO – 1) Where:

	SPO is the number of parallel connected strings protected by the nearest overcurrent protection device. NOTE When no overcurrent protection is used SPO is the total number of parallel connected strings in the PV array; and the trip current of the nearest overcurrent protection device is replaced by zero.
PV string cable (PV string overcurrent protection provided)	Trip current *** of the PV string overcurrent protection device
PV sub-array cable (PV sub-array overcurrent protection not provided)	The greater of the following: a) Trip current*** of the PV array overcurrent protection device + 1.3 xSum of short circuit current of all other sub-arrays b) 1.3 x ISC S-ARRAY (of relevant array) NOTE When PV array overcurrent protection is not used, the corresponding parameter is replaced by zero in equation (a).
PV sub-array cable (PV sub-array overcurrent protection provided)	Trip current*** of the PV sub-array overcurrent protection device
PV array cable (PV array overcurrent protection not provided)	1.3 x Isc ARRAY
PV array cable (PV array overcurrent protection provided)	Trip current*** of the PV array overcurrent protection device
* The operating temperature of PV modules and consequently their associated wiring can be significantly higher than the ambient temperature. A minimum operating temperature of maximum expected ambient temperature + 45° C should be considered for cables installed near or in contact with PV modules. ** The location and method of installation (i.e. enclosed, clipped, buried etc) of cables also needs to be considered in establishing a cable rating. Cable manufacturers recommendations need to be taken into account in establishing the rating according to installation method. ***Trip current is the nominal current at which the overcurrent protection device is calibrated to operate. The current at which the device trips will generally be greater than the nominal rated current.	

Insulation of cables

The insulation of cables used within the PV array shall:

Have a voltage rating of at least 1.2 x VOC ARRAY,

NOTE The use of single core insulated and sheathed cable is recommended for wiring of LV PV arrays, to minimise the risk of faults within the wiring.
Have a temperature rating according to the application,

NOTE PV modules frequently operate at temperatures of the order of 45 °C above ambient temperature. Cable insulation of wiring installed in contact or near PV modules shall be rated accordingly.

The calculation for the selection of the conductor sizes & insulation thickness to be submitted for approval

Switching Devices

All switching devices, shall comply with the following requirements:

– rated for d.c. use (especially when voltage is over 30 V due to the risk of arcs);
– have a voltage rating equal to or greater than 1.2 x V_{OC} ARRAY;
– not have exposed live metal parts in connected or disconnected state;
– interrupt all poles, except in the case of a pole connected either to earth or to a protective conductor.

Disconnectors

In addition to the requirements of switching devices, disconnectors shall have a current rating equal to or greater than the associated overcurrent protection device, or in the absence of such device, have a current rating equal to or greater than the required current carrying capacity of the circuit to which they are fitted. (refer to Table for current calculation) In addition, circuit breakers and any other load breaking disconnection devices used for protection and/or disconnecting means shall comply with the following requirements-

Not be polarity sensitive (Fault currents in a PV array may flow in the opposite direction of normal operating currents).

- Be rated to interrupt full load and prospective fault currents from the PV array and any other connected Power sources such as batteries, generators and the grid if present.
- When overcurrent protection is incorporated, the trip current shall be rated according to IEC 62257
- Plug connections for interruption under load may also be used if equivalent level of safety can be assured.

NOTE Only specially constructed plugs and sockets are capable of interrupting load safely. All systems with an open circuit voltage greater than 30 V can experience d.c. arcs. Plugs and sockets which are not specially constructed for load interruption if disconnected under load represent a safety risk and generally incur damage to the connection which will compromise the quality of the electrical connection and could lead to overheating of the connection.

Fuses

Fuses used in PV arrays shall comply with the following requirements:

- Be rated for d.c. use

- Have a voltage rating equal or greater than 1.2 x V_{OC} ARRAY
- Be rated to interrupt full load and prospective fault currents from the PV array and any other connected power sources such as batteries, generators and the grid, if present.

NOTE When fuses are provided for over current protection, the use of fused switch-disconnectors (fuse combination units) is recommended.

Fuse holders

Fuse holders shall comply with the following requirements:

- Have a voltage rating equal or greater than 1.2 x V_{OC} ARRAY.
- Have a current rating equal or greater than the corresponding fuse.
- Provide a degree of protection not less than IP 2X.

By-pass diodes

By pass diodes may be used to prevent PV modules from being reverse biased and consequent hot spot heating. If by-pass diodes are used, and they are not embedded in the PV module encapsulation, they shall comply with the following requirements-

- Have a voltage rating at least 2XV_{OC} MOD of the protected module.
- Have a current rating of at least 1.25 XI_{SC} MOD.
- Installed according to module manufacturer's recommendations.
- Installed so, no live parts are exposed.
- Protected from degradation due to environmental factors.

Blocking diodes

Blocking diodes may be used but they are not a substitute for overcurrent protection. In systems containing batteries it is recommended that some device will be implemented to avoid reverse current leakage from the batteries into the array at night. A number of solutions exist to achieve this including blocking diodes.

If used, blocking diodes shall comply with the following requirements:

Have a voltage rating at least 2 x V_{OC} ARRAY

Have a current rating of at least 1.25 times the short circuit current at STC of the circuit that they are intended to protect; that is-

- 1.25 x I_{SC} MOD for PV strings
- 1.25 x I_{SC} S-ARRAY for PV sub-arrays
- 1.25 x I_{SC} ARRAY for PV arrays
- Installed so no live parts are exposed
- Protected from degradation due to environmental factors.

If there is a special recommendation from the manufacturer or from local regulation to use blocking diodes in PV strings of the PV array, these diodes shall be installed as per their recommendations.

Blocking diodes are used, their reverse voltage shall be rated for 2 x U_{OC} STC of the PV string. The blocking diodes shall be connected in series with the PV strings

11.0 JUNCTION BOXES

The junction boxes shall be dust vermin and waterproof and made of FRP/Thermo Plastic with IP65 protection with adequate size current collection terminals. Rating of the JB's shall be suitable with adequate safety factor to interconnect the solar PV array. Metal oxide arrestor shall be provided inside the array junction boxes.

PV array and PV sub-array junction boxes, where installed, shall be readily available. The arrangement of JB's for collection of current from the SPV arrays is Sub array JB's with test point for quick fault location, than Main Junction Box. 20% Spare terminal shall be provided in JB's.

12.0 ARRAY SUPPORT STRUCTURE

The photovoltaic array support structure forms part of installation and must be constructed of anodized aluminium or hot dipped galvanized Steel. The support frame shall hold the array at the optimum angle and orientation for the site and shall be roof/ground mounted.

The PV array support structures should comply with national standards and regulations with respect to loading characteristics. Particular attention should be given to wind loads on PV arrays.

Support structures and module mounting arrangements should comply with applicable building codes (including earthquake requirements where relevant), regulations and standards.

Corrosion-

When possible all structures shall be made of corrosion resistant materials e.g. aluminium or galvanizad steel. If the structure is metallic, aluminum or hot dipped galvanized steel are well suited to this type of use. If the array is installed in a marine or other highly corrosive environment, aluminium shall be anodized.

The same applies to all bolts, nuts and fasteners.

Provisions shall be made in order not to create electrochemical corrosion between the structures and the building on the one hand, and the structures and photovoltaic modules on the other. **If the system is earthed**, it is recommended that the negative conductor be connected to the earth electrode as this arrangement will reduce electro-chemical degradation of the electrode and other metallic parts.

Wind load-

Wind force applied to the PV array will generate a significant load for building structures. This overload should be accounted for in assessing the capability of the building to withstand the resulting forces.
On assessing this component, the maximum wind speed observed (or known) on site shall be used, with due consideration for punctual wind events (cyclones, tornadoes, hurricanes, etc.). The PV

array structure shall be secured in an appropriate manner or in accordance with local building standards.

The minimum wind flow requirement is given in cl no. 4.1, however it shall be observed at site & accordingly the effective loading capacity of the structure on the roof to be calculated.

Total Load on the roof of the Building

The Bidder shall submit the total weight of structure, array & other accessories taking care of wind load on the roof, according the strength of the roof to be designed.

13.0 Earthing system

PV array earthing

General

The earthing of the PV system is classified as follows-

1. Earthing of the main current carrying conductors of the array (system earthing)
2. Earthing of exposed conductive parts for lightning protection and/or equi-potential bonding.

PV array system earthing

In the following Table several configurations are considered. No consideration is given to earthing of exposed conductive parts, which is covered in the following clause.

PV system earthing configurations

Photovoltaic array earthing equipment	Application circuit	Consequence on the status of the PV array
Unearthed	Unearthed DC loads	Floating
	Earthed DC loads	Fixed to earth
	AC loads connected via isolated PCU	Floating
	AC loads connected via a nonisolated power conditioning unit	Fixed by the status of the neutral of the application circuit
Earthed * **	Unearthed DC loads	Fixed to earth

	Earthed DC loads	
	AC loads connected via isolated PCU	
	AC loads connected via a nonisolated power conditioning unit PCU	Not permitted
* In non-centre-tapped, earthed PV arrays, either the positive or negative pole could be connected to the earth, but the preferred configuration is to earth the negative, because connecting the positive to earth could result in corrosion of the earthing electrode. ** In a centre-tapped earthed PV array where the PV array is equally divided into two segments connected in series and the midpoint connected to earth. The “consequences on the status of the PV array” column is not changed whether the array is centre-tapped earthed or earthed on only one pole.		

Earthing of exposed conductive parts and equipotential bonding

There are three possible reasons for earthing exposed conductive parts of a PV array-
a) Protective earthing to provide a path for fault currents to flow
b) Lightning protection
c) Equipotential bonding to avoid uneven potentials across an installation.

PV array frame earthing shall be done in accordance with the IEC: 62257/IS: 3043.

Earthing electrode

If a separate earthing electrode is provided for the PV array, this electrode shall be bonded to the installation earth.

See recommendations on the design of electrodes for lightning protection.

Equipment earthing

Equipment earthing refers to the bonding to earth of all exposed conductive parts and frames of the PV array including any structural metalwork. PV array frame earthing shall be done in accordance with the IEC: 62257.

Earthing conductors

All PV array earthing conductors shall comply with the material, type, insulation, identification, installation and connection requirements specified in IEC 60364-5-54.

Earthing terminal of PV system

When the PV array is earthed, the connection to earth shall be made at a single point and this point shall be bonded to the installation earth.

In systems without batteries, this connection point shall be between the PV array disconnection device and the power conditioning unit and as close as possible to the power conditioning system.

In systems containing batteries, this connection point shall be between the charge controller and the battery protection device.

NOTE This is to allow for interruption of any earth fault current.

PV system earthing conductor

If the PV array is earthed, the PV system earthing conductor shall be sized to carry 1.25 x ISC ARRAY continuously, and comply with the provisions for earthing conductors specified in national wiring standards or in absence of such standards, with the provisions set out in IEC 60364-5-54/IS: 3043 with respect to material and type, insulation, identification, installation, connections and aluminium conductors.

Installation Requirements-

PV array production optimization

To optimize the PV array production it is necessary to fulfil the following requirements:

Orientation, tilt angle and flatness

In so far as possible, the orientation and tilt angle of the modules shall optimize the production of energy in relation to the needs. The north or south orientation of the modules is hemisphere dependent. However, the building may not necessarily allow ideal orientation of these two parameters (roof not orientated south or north, vertical front…) and therefore they shall be clearly accounted for in the production calculation at the sizing design phase. What ever the array latitude, it is generally recommended that the slope shall keep to a minimum value of ten degrees (10°) in relation to the horizontal, thus preventing stagnation and allowing rain water to carry away dust deposits. Moreover, periodical cleaning actions shall be performed, however, as need be. The surface for fitting photovoltaic modules to structures shall be perfectly flat in order not to induce mechanical stresses on securing the modules in order to avoid risks of module rupture.

Location: accounting for shadow

Environmental

Shadowing of the PV array should be minimized or preferably eliminated over the whole day with consideration given to all seasons of the year. A shadow blanking off a photovoltaic cell may cause loss of almost the whole production of this module, significantly reducing the performance of a string of modules.

One line of photovoltaic modules over the other

On flat roofs, photovoltaic modules are arranged in rows. The first row is fully exposed to sunshine and therefore, the shadow thus generated may affect the next row and so on.

As a basic rule, no shadow should be generated from one row to another. It may occur that the available space will not allow to have this rule readily applied: an energy production study versus the various structure configurations should be conducted (e.g., moreor less high, hence more or less spaced structures, acceptance of shadow early in the morning and end of the afternoon, change of orientation and/or of slope.)

A compromise should be retained allowing to best fulfill the site requirements for useful energy site.

NOTE Where a row comprises several modules along height, care shall be exercised in order to connect the modules to one another as a function of their height along this row. For example, lower modules will constitute a branch and upper modules will constitute another branch. This will make it possible for upper modules to continue producing energy even though lower modules are in the shadow.

Maintaining the integrity of the covering

The attachment of structures to the building must keep to the sealing efficiency of the covering and mechanical integrity of the building. Special care shall be exercised with terrace fitted units where the quality of the covering and related structure is often very poor. It is advisable to have structures laid onto the building instead of attached to it.

Safety

Attention should be given in the operation and maintenance procedures to the following safety requirements:

a) Emergency shutdown procedure;
b) Obey all warning signs;
c) Shut system down and interrupt PV array currents according to the manual shutdown procedure;
d) Split strings into extra low voltage sections (if relevant);
e) Warn of the live parts that cannot be de-energised during daylight.

14.0 SOLAR STREET LIGHTING SYSTEM

A stand alone dusk-dawn solar photovoltaic street lighting system comprises of solar PV module, LED Light, lead acid battery, control electronics, Inter-connecting wire/cables, Battery box, Module mounting hardware, Hot Dipped GI-Pole.

15.0 DRAWINGS AND DOCUMENTS

15.1 The following documents shall be submitted along with the offer:

a) Filled up data sheet.
b) List of two years operation and maintenance spare.
c) Solar array sizing, charge controller sizing and battery sizing calculations.
d) 3 phase grid charger sizing calculations.
e) Total load/weight calculation of the PV system (Structure, Modules etc) on the roof
f) Approx. dimensions of the system
g) Catalogues for solar array, charge controller, 415V 3ph grid charger and battery bank

15.2 The following drawings (in three sets) shall be submitted **for approval** within 3 weeks of award of contract.

a) Geographical survey report required for solar system design, tilt angle calculations etc
b) Geo Graphical Data of the site (Avg Insolation, Wind Flow, Solar Radiation data (Monthly), Weather Conditions etc as required in the design)
c) Solar array sizing, charge controller sizing, FCBC Charger, PCU and battery sizing calculations.
d) Data sheets & specification of SPV Modules, FCBC Charges, MPPT Chargers, Ni-Cd Battery, DC-DC Converter, DCDBs, Solar Street Lights
e) STAAD analysis report of SPV structure
f) SPV array installation & foundation drawings
g) PVSyst Simulation reports for On-grid & Off-Grid systems.
h) 3x 1 phase grid charger sizing calculations
i) Earthing & Lightning calculations & drawings
j) Complete Hybrid solar system working philosophy.
k) Hybrid FCBC (Bidirectional) system working philosophy.
l) Cable size selection calculation considering the voltage drop & insulation along with voltage grade, type, size and Cable schedule
m) System protections provided at various stages of the system
n) G.A. of solar panel, charge controller and battery bank.
o) G.A. drawing of street lighting pole
p) G.A. drawing of 415V 3x1 Ph charger, PCU & Hybrid FCBC
q) Schematic
r) Bill of Material
s) Installation manual
t) Operation & Maintenance Manual
u) Wiring diagram for reference.

15.3 Final drawings/data sheets, operation & maintenance manual and erection instructions shall be submitted in six prints / One Soft Copy.

16.0 TESTING OF SOLAR MODULES

Solar modules shall be tested as per the test sequence mentioned in the IEC: 61215 & IEC: 60904.

Insulation test of Modules-

500V DC+2 x Max System Voltage (For Modules less that 0.1 m^2 area)
1000V DC+2 x Max System Voltage (For Modules area greater than 0.1 m^2 area)
Value of Insulation Resistance should be as per IEC; 61215

17.0 INSPECTION

Inspection and testing of equipment shall be carried out by the owner/ consultant at the works of the contractor and performance test at site on final product to ensure conformity of the same with the acceptable criteria of technical specification, approval drgs. and reference national/ international standards.

17.1 The contractor shall submit Quality Assurance Plan (QAP) for respective equipments within 3 weeks of

award of contract.

QAP shall be prepared and furnished by the contractor in MECON Form No. 11.20(4.4) F-10 along with their internal in process quality checks.

17.2 Tests as per international standard for solar system and grid charger at manufacturer works.

17.3 Batteries shall be tested for `Acceptance Test at manufacturer's works as per IS. Type and routine test reports shall be submitted for review.

17.4 Final integrated testing (Full load test) along with solar array, charge controller and the batteries & PCU shall be done at site. Site acceptance test procedure shall be submitted by the Contractor along with QAP.

-X-X-X-

Rev: 1
Edition: 1

SPECIFICATION

FOR

BATTERY CHARGER

SPECIFICATION NO.: MEC/TS/05/E9/28

(OIL & GAS SBU)
MECON LIMITED
DELHI 110 092

CONTENTS

Sl. No.	Description
1.0	SCOPE
2.0	CODES & STANDARDS
3.0	SERVICE CONDITIONS
4.0	GENERAL REQUIREMENTS
5.0	POWER SUPPLY PARAMETERS
6.0	CONTROLS, INDICATIONS AND METERING
7.0	PAINTING
8.0	SPARES
9.0	OPERATIONAL PHILOSOPHY
10.0	DRAWINGS AND DOCUMENTS
11.0	INSPECTION AND TESTING

Annexure-I FCBC CHARGER-BIDIRECTIONAL

PURCHASER'S DATA FOR CHARGER- MEC/DS/05/E9/28

MECON LIMITED REGD. OFF: RANCHI 834002	STANDARD TECHNICAL SPECIFICATION ELECTRICAL SECTION, DELHI		
TITLE	BATTERY CHARGER	DOCUMENT NO. MEC/TS/05/E9/28	Page 1 of 1 REVISION : 1 EDITION : 1

AMENDMENT STATUS

Sl. No.	Clause / Paragraph / Annexure / Exhibit / Drawing Amended	Page No.	Revision	Date	By (Name)	Verified (Name)
01	Bidirectional FCBC specification provided-Annexure-I	-	1	Aug-19	AM	MKJ

1.0 SCOPE

1.1 This specification defines the requirements of survey, design, engineering, supply of equipment/ materials, Quality assurance & Quality control (QA & QC), inspection at manufacturer works, installation, testing and commissioning of a Battery Charger required for the charging of the Battery bank.

This specification provides the basic parameters of the Battery Charger. All data required in this context shall be taken into consideration to develop an acceptable design and for proper engineering of the Battery Charger.

Compliance with these specifications and/or approval of any documents submitted by contractor shall in no case relieve the contractor of his contractual obligations of providing fully operational Battery charger for Specified Battery banks and rectification of the all observations arises during field testing and commissioning.

Tenderer shall refer separate Technical specification (TS) /PJS/ SOR item details for following minimum details / requirements as part of the project needs:

1. **Requirement of FCBC Charger and its voltage grade & rating.**
2. **Type of Battery and its capacity**
3. **Incoming and outgoing feeder details**
4. **Location and Quantity**

Any other item / component / equipment / accessories / services as necessary for satisfactory completion of the project shall also be covered in separate Technical specification (TS) / PJS/ SOR item.

2.0 CODES AND STANDARDS

2.1 In general the equipment covered by this specification shall, unless otherwise specified, be in line with the requirements of any of the latest applicable standards of:

IS:13947	:	Specification for low voltage switchgear & control gear
IS:12021	:	Control transformer for switchgear & control gear
IS:5469	:	Code of practice for use of semiconductor junction devices
IS:3700	:	Essential rating & characteristics of semiconductor devices
IS:1248	:	Analogue electrical measuring instruments
IEC: 60947	:	Low-voltage switchgear and controlgear

IS: 4540	-	Specification for semiconductor rectifier
IS :16521	-	Specification for stationary cells and batteries Lead acid type with Plante positive plates.
IEC-623	-	Specification for Nickel cadmium rechargeable batteries
IEEE	-	Recommended practice for electrical power distribution (Std. 141) for industrial plants.

a) International Electromechanical Commission (IEC)
b) American Standards Institution (ANSI)

2.2 Wherever the requirements in this specification are in conflict with any of the above standards, the requirements under this specification shall be binding.

2.3 In case of imported equipments standards of the country of origin shall be applicable if these standards are equivalent or stringent than the applicable Indian standards.

2.4 The equipment shall also confirm to the provisions of Indian Electricity rules and other statutory regulations currently in force in the country.

2.5 In case of any contradiction between various referred standards/ specifications/ data sheet and statutory regulations the following order of priority shall govern.

- Statutory regulations.
- Data sheets.
- Scope of Work/ Job specification.
- Codes and standards

3.0 SERVICE CONDITIONS

The Battery Charger shall be suitable for installation in non air-conditioned restricted ventilated room in locations having generally warm and dusty atmosphere. Service condition shall be as specified in the data sheet. If not specifically mentioned therein, a design ambient temperature of 50˚ C and an altitude not exceeding 1000 M above mean sea level shall be considered.

4.0 GENERAL REQUIREMENTS

Battery Charger unit shall be capable of continuous trouble free operation at full load rating specified. The design & manufacturing of unit shall have highest grade workmanship. Interchange ability must be guaranteed for the similar type equipments/Parts & material.

Grid charger charges the battery bank from grid supply when solar power is not available (During worst weather conditions/ at Night) or battery is deep discharged upto 80%. During the charging, the charger will supply the load simultaneously and should protect specified type of batteries from being over/under charged and ensures maximum battery life. Grid charger turn on automatically when no sun power is available or battery is deep discharged. There shall be interlock between the solar charge controller and grid charger. There shall be provision to charge the battery bank from any of charger manually also in case of controller failure condition. Grid charger shall be

FCBC type. The charger rating shall be selected such that it can charge fully discharge battery at C10 rating. (Bidder shall submit the calculation).

FCBC charger shall communicate with solar charge Controller through and FCBC charger shall only supply the power to battery when there is no PV Power or Battery voltage becomes less than designed value. Battery shall remain in float charging condition as long as PV power or Grid is available and discharging only if PV/grid power is not available.
The rating each of rectifier / charger shall be calculated as follows:

For Ni-Cd batteries = [Load current + 0.1 x Ah rating of total battery bank (10 hr. rating of battery)]

Float charging current shall be as per the Battery Current requirement in float mode and load current requirement.

With transient and surge protection circuit in input circuit for protection from surges and voltage Spikes, necessary smoothing reactor and filters shall be provided.

4.1 **Constructional Features**

a) Sheet steel clad, floor mounted, freestanding design.
b) Minimum sheet steel thickness shall be 2mm for load bearing side (3mm for outdoor application) & 1.6 mm for non-laod bearing side.
c) Hinged door shall be provided at front & back.
d) IP-55 for Outdoor type (dust & weather proof) and IP 42 for Indoor type as specified in data sheet with forced cooling if required (Refer ambient condition as mentioned in the specification/PJS).
e) Suitable louvers shall be fitted for ventilation.
f) All the materials for connections, bus bar and etc, shall be of copper with suitable rating considering 1.2 A/ mm2 requirement.
g) Forced ventilation shall be provided with min. 02 nos. of fan.
h) Assembled on base channel of minimum height 50mm and 2.5mm thickness.
i) Zinc bi-chromated and passivated hardware.
j) Suitable lifting arrangement shall be provided.
k) Cable entry from bottom, 2mm thick removable gland plates. Battery Charger shall be supplied with cable lugs for termination, Cable glands (Double compression type for outdoor application)
l) Panel designation with screwed nameplate shall have letter not less than 2.5mm high.
m) Device identification on front door and inside the panel shall be of non-rusting metal.
n) Galvanic isolation shall be provided at Input.
o) All metal parts of the panel to undergo surface treatment that includes cleaning, chemical degreasing, pickling in acid, cold rinsing, phosphating and passivating followed by spraying with two coats of epoxy based primer and two coats of epoxy based paint/powder coating of approved colour (By owner/MECON) & shade (RAL-7032 or as approved).
p) All instruments shall be switchboard type and back – connected. 660V PVC insulated wires with stranded copper conductor of size 2.5 mm2 shall be used for control wiring. All fuses shall be provided inside the panel and shall be link type.
q) Forced ventilation shall be provided with suitable nos. of fan.
r) Good ventilation shall be made through side louvers and top louvers. All louvers shall be provided with inside wire mesh for vermin proofing. Vermin proofing shall be given due importance to avoid entry of lizards etc.
s) All wiring shall be ferruled at both ends for identification of connection.

t) Charger shall have high MBTF & low MTTR.
u) Space heaters shall be provided inside the unit to prevent the moisture condensation.
v) Maximum & Minimum height of installation of control equipments (i.e. switches, push buttons etc) shall be 1800mm & 300mm from ground level.
w) Earth busbar of minimum 25x3 mm (Al) shall be provided throughout the length of unit & all non-current carrying metallic parts & installed equipments shall be earthed by this busbar.
x) Charger shall be doubly earthed, and all doors & movable parts shall be earthed by means flexible cu wire connected to earth bus bar.
y) Suitable nameplate of Anodised AL shall be provided for all panel mounted equipments, lamps, indications, switches, meters etc.
z) All live parts shall be shrouded for safety purpose.
aa) 20% extra spare terminal shall be provided.

Note- Solar charge controller & Grid charger shall be designed as per the recommendation of the battery manufacturer & should have same charging Characteristic & ensure maximum battery life.

5.0 POWER SUPPLY PARAMETERS

a) Input Power Supply Parameter

415VAC, 3 Phase with Neutral, 50 Hz 330 ~ 460 Vac, 47 ~ 53 Hz.

b) Output Power Supply Parameter
Output Voltage : 80-130V (as per SPV system design)

Boost Mode: Constant current charging in boost mode shall be as per the Battery bank manufacture recommendations & approved in detail engineering up to **Vboost** (Voltage level settable), followed by constant voltage at **Vboost**.

Float Mode: Constant Voltage charging, in the range of voltage level as recommend by the Battery manufacturer & approved in detail engineering (user selectable). Maximum current shall be as per data sheet with current limit.

Output Current- As per Data sheet.

Please refer data sheet for further details & range of the voltages attached as Annexure-I to this document.

6.0 CONTROLS, INDICATIONS AND METERING

6.1 Following Indications shall be provided on Charger front door:

a) 'R" Phase ON
b) 'Y' Phase ON

c) 'B' Phase ON
d) Charger ON
e) Charger Fail
f) Current limit / System over load
g) Boost charge
h) Float charge

6.2 Following Protections & Alarms shall be provided in Charger:

a) Over voltage
b) Under Voltage
c) Over Current
d) Over Temperature Trip (Heat Sink Temp.)
e) Over charging protection
f) Short circuit
g) Over Temperature Trip (Heat Sink Temp
h) Earth fault
i) Lightning surges (in both input & output)
j) Manual selection of Float & Boost Mode
k) Fuse Failure

6.3 Charger shall have following parameters are to be displayed on the panel thru digital meters.

a) Grid Side: Phase Voltage, Phase Current, Frequency, Power, Power Factor of each Phase
b) DC O/P Voltage (Digital)
c) DC O/P Current (Digital)
d) Leakage Current (Analog)
e) BATTERY CURRENT AND VOLTAGE WITH INDICATION OF STATUS - "IN CHARGE" OR "DISCHARGE". (Analog)
f) Load Side:
AC Side—O/P Phase Voltage, Phase Current, Frequency, Power, Power Factor
DC Side-O/P Voltage & Current of each charger

g) System level: Mode of Operation, Active Faults, Heat Sink/ IGBT temperature, System Mimic.

6.4 Monitoring signal for remote SCADA monitoring-

Following signals/Contacts are to be provided a) Isolated 4-20 MA Signal for

i) DC output Voltage: 0 to 200V DC or as per the design
ii) DC Output Current: 0 to 200A or as per design

b) Potential free contacts for

i) AC power availability of each phase (R, Y, B)
ii) Charger ON

6.5 **Current Limit:**

Current limit for operation in both float & boost mode shall be user adjustable from 10% to 100% of the design rating.

6.6 The Charger which includes, but not limited to, transformer, rectifier circuit as well as control circuit etc required for satisfactory operation of Float and Boost charger shall be housed in single cabinet. The equipment offered shall be highly reliable, latest upgraded Technology in Control, monitoring and Feedback of proven design.

7.0 PAINTING

The sheet steel used for fabrication shall be thoroughly cleaned and degreased to remove mill scale, rust, grease and dirt. Fabricated structures shall be pickled and then rinsed to remove any trace of acid. The under surfaces shall be prepared by applying a coat of phosphate and a coat of zinc oxide / phosphate primer. The under surface shall be free from all imperfections before undertaking the finishing coat. It shall then be spray painted /powder coated with two coats of epoxy paint. Colour of final paint shall be vendor standard unless otherwise specified in data sheet. The finished panel shall be dried in stoving ovens in dust free atmosphere. Panel finish shall be free from imperfections like pinholes, orange peels etc. Colour shade of panel shall be RAL-7032 or as approved.

8.0 SPARES

01 Set of Critical/Mandatory spares (1 no. of control transformer, 10% of push buttons, 01 of each type of meter, MCB's & MCCB's (consist of one no. of each rating MCB & MCCB), Fuse of all ratings, SCR control senser diode), display meters, capacitors, fuse and etc, List of these spares shall be submitted along with Bill of Materials. The prices of mandatory spare shall deemed to be inclusive in the price of Charger.

9.0 OPERATIONAL PHILOSOPHY

9.1 State of Art Design
9.2 Easy component layout for easy operation and maintenance.
9.3 Best designed for rural requirements.
9.4 The float and boost voltage should be user adjustable range as mention above in technical specification.
9.5 Current limit for operation in both float & boost mode shall be user adjustable.
9.6 Three single phase chargers connected in parallel fed by R-Y-B phase respectively. For reference see attached reference drawing.
9.7 When all three chargers are available, total Capacity = 3 * Individual charger capacity.
9.8 When only two phases are available, total capacity = 2 * Individual charger capacity.
9.9 When only one phase is available, total Capacity = Individual charger capacity.
9.10 Boost charging can be done through manual mode only.
9.11 All chargers have individual monitoring circuit for protection like U/V, O/V, and Short circuit.
9.12 The float section will give stabilised D.C. output with +/-1% accuracy. It should be possible to set output voltage as per data sheet or as per approved during detail engineering and once the output is set, it will not change beyond ± 1% of set value. The ripple content of the charger shall not exceed +/-2% with battery connected.

9.13 Incoming AC supply shall be converted to DC through Thyristor. The rectifiers shall operate according to the constant voltage current liming principle and shall incorporate a “Soft Start” feature to gradually accept load on initially energizing.

9.14 The rectifiers shall be protected against reverse battery connection at DC link voltage bus. Subsequent to a discharge cycle when battery is connected to rectifier, the battery current shall be monitored, controlled and limited to set value automatically irrespective of the Load current.

9.15 In Boost Mode, Charger shall be capable to maintain terminal voltage as mentioned in data sheet or as approved in detail engineering when connected to the battery bank. Over load protection shall be provided in order to switch off the boost section in case of over load. Suitable device shall be provided to take care of input voltage fluctuation and charging current on boost side.

10.0 DRAWINGS AND DOCUMENTS

10.1 Vendor shall furnish all data/drawings/documents specified in the vendor data requirement.

10.2 Approval of the drawing shall not relieve the manufacturer of his responsibility to equipment conforming to the relevant specification and standards or for any mistakes, errors or omissions in the drawing.

10.3 Following minimum information shall be furnished with bed :

a) Clause wise deviations, if any, to the specifications.

10.4 The following drawings (in three sets) & documents shall be submitted for approval within 3 weeks of award of contract.

a) Power and control circuit diagrams.
b) General arrangement drawing along with dimension.
c) Technical detail along with block diagram.
d) Guaranteed technical particulars as per data sheet.
e) List of Mandatory spares.
f) Operational Philosophy
g) Installation Procedure for Charger
h) Schematic diagram & wiring diagram.
i) Bill of material.
j) Ratings of major components and actual design parameters considered.
k) Terminal diagram and connection details.
l) Field testing and commissioning procedures.
m) Maintenance and operation manual, Installation instructions with dispatch.
n) Bill of material with details of rating, make etc.

Final drawings, operation & maintenance manual and erection instructions shall be submitted along with despatch of equipments in three sets in hard copy & two sets in soft copy (CD).

11.0 INSPECTION AND TESTING

Inspection and testing of equipment shall be carried out by the owner/ consultant at the works of the contractor on final product to ensure conformity of the same with the acceptable criteria of technical specification, approval drgs. and reference national/ international standards.

11.1 The owner or his authorized representatives may visit the works during manufacture of equipment to assess the progress of work as well as to ascertain that only quality raw materials are used for the same. He shall be given all assistance to carry out the inspection.

11.2 The contractor shall submit Quality Assurance Plan (QAP) for respective equipments within three weeks of award of contract. Owner's representative shall be given minimum two weeks advance notice for witnessing the final testing.

11.3 Inspection and testing of equipment shall be carried out by the owner/ consultant at the works of the contractor on final product to ensure conformity of the same with the acceptable criteria of technical specification, approved drawings and reference national/ international standards.

11.4 QAP shall be prepared and furnished by the contractor in MECON Form No. 11.20(4.4) F-10. Test certificates including test records and performance data etc shall be furnished by the vendor.

11.5 Final acceptance testing shall be done at site. Site acceptance test procedure shall be submitted by the Contractor along with QAP.

The following routine tests shall be conducted at Vendor's works:

(a) Visual checks for dimensions and general arrangement.
(b) Wiring checks
(c) Functional Test
(d) Voltage Regulation Test 100% Load, No Load
(e) Efficiency Check
(f) Phase selection logic operation
(g) Harmonic measurement
(h) HV & IT Test
(i) Heat Run Test for 8 Hours on full load
(j) Enclosure protection check and verification of Type Test Document

Please refer QAP for details of tests required at Factory.

Annexure-I FCBC CHARGER-BIDIRECTIONAL

BASIC PARTICULARS FOR DESIGN

Basic Details

- Suitable for industrial application.
- The system shall be designed as per Schedule of Quantity/MR at 50°C / 2°C ambient and load specified.
- Interconnecting cables & Equipment earthing-Cu plate type.

Common DC BUS shall be provided and connected to the MPPT Charger, Battery Bank and FCBC charger (Bidirectional) and which shall be supplied with PCU MPPT and 3 phase inverter as integrated unit depending upon the size of the solar power system. It should conform to IEC61683 and must additionally confirm to the relevant national / International Electrical Safety Standards IEC60068-2. To minimize power losses, the PCU should be microprocessor based having inverter, which converts DC energy produced by the solar array to 3 phase AC energy. The combined wattage of all inverters should not be less than rated capacity of power plant under STC. Maximum power point tracker shall be integrated in the PCU/inverter to maximize energy drawn from the array.

General Performance Requirement of the PCU Solar Inverter cum FCBC-

a) PCU cum FCBC shall also house MPPT (Maximum Power Point Tracker), an interface between Solar PV array & the Inverter, to the power conditioning unit/inverter output should be compatible with the grid frequency (Refer std data sheet-MEC/DS/05/E9/078).

b) The PCU for 3Ph should be based on three separate 1- Phase IGBT based power circuits such that through common controller they give 3ph AC output and cater for unbalance on AC line/load.

c) The PCU Controller should be latest DSP based controller and should have provision to first use the solar energy available to charge the Battery (Considering max charging current selected) and any excess PV power available should be exportable to Grid under Net-Metering.

d) Bidirectional FCBC charger shall work in tandem with solar charge Controller through a central DSP control unit such that MPPT charger is always on priority and FCBC charger shall only supply the deficit load and battery power requirement. Battery shall remain in top of charge condition as long as PV power or Grid is available and discharging only if PV/grid power is not available. Solar power needs to be utilised full and at times when there is excess solar power also available, it should also be possible to convert this into AC power which can, then be utilised to run other appliances on the Grid/mains line or exported to the Grid.

e) Battery energy should not discharge into Grid.

f) The same Inverter should also act as Float Cum Boost Charger (FCBC) when required and should generally conform to MEC/TS105/E9/28 in terms of output voltage and current but shall be using IGBT and AFE technology when there is low battery and conditions as decided during detail engineering.

g) It should be possible to activate scheduling such that the solar power is fully utilized and Grid Power be used when needed i.e. Battery has fallen below certain level. Also in absence of Net Meter, there shall be feature in the FCBC to set the export power in such manner that the

same shall be as per the AC power requirement of the station.

h) There should be central graphical user interface (LCD display) which will be user interface for both SCC and FCBC charger. All parameters and alarms should be visible on LCD display.

i) Charger size shall be based on the maximum Array capacity & Battery Bank Ah.
j) PCU shall be MPPT type with Inverter.
k) Automatic and Manual boost and float charging control through Keypad in Charger Mode. (The threshold for the Boost & Float charging shall be decided during the approval of the design documents as per the recommendation of the Battery Manufacturer)
l) Provision to isolate individual battery bank from charge controller for maintenance purpose.
m) Protection to Short circuit currents due to shadow & short-circuit shall be provided.
n) Remote Monitoring of battery voltage & current, load Voltage & current, solar array Voltage & current, fault status and charging of battery from solar charger controller or grid charger, hook up with Owner's SCADA system through RS232/485
o) SCC and FCBC charger shall communicate through master controller. Master controller will ensure PV power as priority along with dynamic sharing of power between SCC and FCBC charger (working over the Grid/mains supply).
p) All other features of Charger, Power supply parameters i.e. efficiency, constructional etc shall meet the requirements mentioned in the MECON's standard specification and data sheets (MEC/TS/05/E9/078, MEC/DS/05/E9/078, MEC/TS/05/E9/28 & MEC/DS/05/E9/28)

-x-x-x-

TECHNICAL SPECIFICATION FOR FIRE PROTECTION WORKS

STANDARD SPECIFICATION
FOR
FIRE DETECTION
AND
ALARM SYSTEM

SPECIFICATION NO: MEC/TS/05/28/081/11

(OIL & GAS SBU)
MECON LIMITED
DELHI

CONTENTS

1.0	SCOPE
2.0	CODES AND STANDARDS
3.0	SITE CONDITIONS
4.0	GENERAL REQUIREMENTS
5.0	FIRE MONITORING AND ALARM PANELS
6.0	AUTOMATIC FIRE DETECTORS AND ACCESSORIES
7.0	ADDITIONAL REQUIREMENTS FOR FIRE ALARM SYSTEM TO BE INSTALLED IN HAZARDOUS AREA
8.0	SPECIFIC REQUIREMENTS FOR CLEAN AGENT / CO_2 RELEASE SYSTEM
9.0	ENGINEERING REQUIREMENTS
10.0	TESTING AND ACCEPTANCE
11.0	PACKING AND DESPATCH

1.0 SCOPE

1.1 This specification covers the design, engineering, manufacture, testing, packing and supply of automatic and manual Fire Alarm System incorporating manual call points (break glass boxes), automatic detectors, release and inhibit switches for fire suppressant clean agent, data gathering, fire alarm and central fire alarm panels, conventional or computer aided (microprocessor based) mimic panels and associated equipment's as specified hereunder and in data sheets / drawings.

2.0 CODES AND STANDARDS

2.1 The fire alarm system and the components used shall confirm to the latest edition of the following and also the other Indian and international Standards as applicable.

2.1.1	IS-5	Colors for ready mixed paints and enamels
2.1.2	IS-513	Specification for cold rolled low carbon steel sheets and trips.
2.1.3	IS-2175	Specification for heat sensitive fire detectors for use in automatic fire alarm system.
2.1.4	IS-2189	Code of practice for selection, installation and maintenance of automatic fire detection and alarm system.
2.1.5	IS-3700	Essential ratings and characteristics of semiconducting devices.
2.1.6	IS-3826 Part-I	Connectors for frequencies below 3 MHz General requirements and tests.
2.1.7	IS-5469	Code of practice for the use of semi-conductor junction devices
2.1.8	IS-5780	Intrinsically safe electrical apparatus and circuits
2.1.9	IS-11360	Specification for smoke detectors for use in automatic Electrical fire alarm system.

2.1.10	BS-5839 Part-2	Specification for manual call points
2.1.11	NFPA 72	National Fire Protection Association
2.1.12	LPC	Loss Prevention Council Recommendation

2.2 Wherever the requirements of this specification are in conflict with any of the standards mentioned above, the requirements of this specification shall be binding.

2.3 In addition to the above, all equipment shall confirm to the provisions of Indian Electricity rules, Tariff Advisory Committee and other statutory regulations in force from time to time.

3.0 SITE CONDITIONS

3.1 All the equipment's shall be suitable for the site conditions specified in the enquiry document / data sheets. If not specifically mentioned therein, a design ambient of 40`C and an altitude not exceeding 1000m above mean sea level shall be considered with a minimum temperature of 10`C for battery sizing.

4.0 GENERAL REQUIREMENTS

4.1 Unless otherwise specified in the enquiry documents, all the equipment's shall be suitable for installation in safe, non-hazardous area and shall confirm to the recommendations of Tariff Advisory Committee.

Equipment's to be located in hazardous areas shall have certification for use in such areas by the recognized testing and certification authorities, such as 'CMRI', Dhanbad, BASEEFA (UK), UL (USA) etc., or the relevant authorities of the country of origin. Equipment for hazardous areas shall be approved by CCE / DGMS / DGFASLI, as applicable, and all indigenous equipment's shall be covered under a valid BIS license.

4.2 **Power Supply**

The Fire Alarm System shall be suitable to receive the power supply as given below:

a)	Voltage	:	110V / 240V, 6% (field selectable)
b)	Frequency	:	50Hz, 3%, 1 phase

Further distribution shall be vendor's responsibility. Any voltage, other than the above shall be internally derived by the vendor within the system.

4.2.1 The battery back-up shall be capable of maintaining the system in normal operation for a period of not less than 48 hours after the failure of normal mains supply, after which sufficient capacity shall remain to provide full load operation for at least 30 minutes.

The full load shall be considered as the load caused by the operation of all alarm sounders operating simultaneously, operation of detectors in at least 25 percent of the zones and the operation of fault indicators.

The switch over from mains to batteries shall be automatic, in the event of a mains failure.

Ni-Cd / Lead Acid / Sealed maintenance free batteries, as specified in data sheets and suitable battery charger shall be provided for each system.

5.0 **FIRE MONITORING AND ALARM PANEL**

5.1 Fire sensed by the field equipment's shall be monitored by Fire Alarm Panels located in plant control rooms. Fire Alarm panels can be either conventional type using digital electronic techniques or computer aided microprocessor based analogue addressable type, as specified in the enquiry documents / data sheets.

5.1.1 The conventional system shall generally comprise of the following equipment's used in conjunction with conventional automatic fire alarm detectors and manual call points. Exact requirements shall be specified in enquiry documents data sheets.

a) Central Fire Alarm Panel with Mimic
b) Zonal Fire Alarm Panel
c) Repeat Alarm Panel / Annunciation Panel

5.1.2 Microprocessor based system shall generally comprise of the following equipment's used in conjunction with analogue addressable automatic fire alarm detectors and manual call points. Exact requirements shall be specified in enquiry documents / data sheets.

a) Central Fire Alarm Panel / Central Processing Unit
b) Data Gathering cum Fire Alarm Panel (DGFAP)
c) Repeat Alarm Panel

5.2 Addressable Fire Alarm System (PLC Based)

5.2.1 Central Fire Alarm Panel

5.2.1.1 Central fire alarm panel shall gather information from various Zonal Alarm panels regarding the status of activation of detectors / manual call points etc. on an overall basis.

5.2.1.2 Central fire alarm panel shall house starter control(s) for siren(s), in order to generate an alarm audible in the entire plant in the event of fire.

5.2.1.3 If specified in the enquiry document / data sheets, the central fire alarm panel shall have provision for signals, alarms etc. as specified under clauses 5.2.5.1.

5.2.1.4 A mimic, unless otherwise specified in the enquiry document shall form an integral part of the central fire alarm panel and shall be located at the top of the panel. If separate, mimic panel shall either be wall mounting or free-standing floor mounted type. Two nos. LEDs shall be provided for each zone on mimic panel. It shall derive the power supply from Fire Alarm panel. Mimic panel shall be illuminated through potential free contacts available in fire alarm panel.

LEDs on the mimic panel shall be arranged on a graphic mimic of the plant/area covered by the mimic panel. The LEDs shall be arranged on the basis of zones, unit wise, building wise, detector / manual call point wise or a combination of the above as described in the enquiry document/data sheets.

5.2.1 Circuit Description and Operational Requirements

5.2.1.4 The system shall be modular in construction to facilitate future extension/modification and shall include fire monitoring PCB, output relays, annunciators, indicating lamps, switches, push buttons etc.

5.2.1.5 Static components shall be mounted on plug-in type printed circuit boards (PCBs). PCBs for identical logic circuits shall be interchangeable. Connections to and from the PCBs shall be taken through gold plated edge connectors only. Plug and sockets of heavy-duty type shall be used for PCBs. Card edge connecting pins shall not be acceptable. PCBs shall be coated with the antifungals chemicals on both sides and shall be suitable for tropical climate.

5.2.1.6 "Fail Safe" feature to signal the failure in the circuitry shall be incorporated in the logic circuit and operation of the alarm system shall be on opening normally closed field contact.

5.2.1.7 Test facility through common "Test" push button shall be provided for complete functional test of each group of logic circuits, audio and visual flasher circuit, lamps etc.

5.2.1.8 The annunciation circuit design shall ensure that momentary short circuit in the lamp circuit does not adversely affect the performance of the system. Visual and audible alarm circuits shall be independent i.e. the failure of one will not affect the other.

5.2.1.9 The circuit shall be so designed that silencing of the current alarm by ACCEPT push button shall not prevent initiation of fire alarm in case of subsequent 'FIRE' signal received from any other location.

5.2.1.10 The field contact wiring will be carried out by using multicore, copper conductor, PVC insulated and armored cable which may be running close to power cables. Hence the logic circuitry shall be designed with sufficiently high signal-to noise ration to avoid spurious actuation due to noise induced in the field wiring because of proximity with power cables. Adequate noise filters and time delay shall be incorporated at the input stages to reduce the effect of the noise.

5.2.1.11 A minimum of two lamps shall be provided in parallel for each fire loop to increase the reliability of the visual alarm.

5.2.1.12 Fire alarm loop card shall be capable to receive the signal from break glass box, Heat, UV, IR, ionization, optical type detector, heat sensing cable, linear beam detector and any combination thereof.

5.2.1.13 Whenever the fire is detected in any zone, both audible and visual (flashing) alarm shall be raised in the fire alarm panel indicating the corresponding location of fire zone. On pressing the 'ACCEPT' push button, the audible alarm shall stop and the lamp shall glow steadily. The panel shall be brought to normal condition by pressing 'RESET' push button (only after the field conditions are normalized). It shall be possible to manually initiate the audio alarm in addition to automatic operation.

If specified in the material requisition / data sheet, the system shall be provided with a siren to be located at a suitable location in the plant. The controls for the siren shall form an integral part of the Fire Alarm Panel. The starter for the siren shall be direct-on-line type, weather proof shall be in an IP-55 enclosure, suitable for outdoor installation. The enclosure shall be epoxy painted fire red, to shade 536 of IS-5.

5.2.2 **Zonal Fire Alarm Panel**

5.2.2.1 Zonal Fire Alarm Panel shall gather information from various detectors / manual call points connected to its loop. It shall monitor the status of detectors, cable faults etc.

Zonal Fire Alarm Panel shall have provision to annunciate the fire/fault signals received from the detector/manual call points connected to its loops. LEDs shall be provided for visual annunciation and electronic hooters as audible alarm.

5.2.2.2 Additionally LEDs shall be provided for power ON, fault, fire, multiple alarm indication etc. Push buttons shall be provided for alarm accept, hooter reset, LED test etc. Power ON switch shall be provided.

5.2.2.3 Zonal Fire Alarm Panel shall generate output contacts for signals to repeat alarm panels, central fire alarm panel etc. It shall generate potential free contacts for energization of hooters, exit signs, tripping of owner's AHU and pressurization system etc.

5.2.2.4 If specified in the enquiry document/data sheets, the zonal fire alarm panel shall have provision for the signals, alarms etc. as specified under clause 5.2.5.1

5.2.3 **Repeat Alarm Panel**

5.2.3.1 Repeat alarm panels shall generally be constructed as specified in clause 5.4 and shall be wall mounting type.

Repeat alarm panel shall receive signals from Central Fire Alarm Panel or Zonal Fire Alarm Panel shall have provision to annunciate the same using audio-visual annunciation. LEDs shall be provided for visual annunciation and electronic hooters as audible annunciation. Additionally LEDs shall be provided for power ON, fault, fire, multiple alarm indication etc. Push buttons shall be provided for alarm accepts and hooter reset, as well as, for LEDs test. Switch shall be provided for power ON.

5.2.3.2 Repeat alarm panels may either have

a) LEDs arranged in a matrix (rows and columns) along with text engraved alongside each LED indicating the zone where the fault/fire has occurred.

OR

b) LEDs arranged on a graphic mimic of the zones/areas covered by the repeat alarm panel.

5.2.3.3 Repeat alarm panels shall derive power from the associated fire alarm panel.

5.2.4 **Alarm, Signal and Control Requirements**

5.2.4.1 In addition to the initiation of fire alarm, zonal, central fire alarm panels shall have the facility for following status signals, status alarms and shutdown signals if specified in data sheets / drawings.

i. Automatic signal for release of clean agent/CO_2 release for protected area and release alarm in control room.

ii. Selector switches for primary or secondary clean agent/CO_2 supply for each skid / protected area.

iii. Manual push button for discharge of clean agent/CO_2 in each protected area (after alarm and 30 seconds time delay).

iv. Clean agent/CO_2 discharge inhibit push button for each protected area.

v. Deluge valve activation push buttons, deluge valve test push buttons and deluge valve activated status lamps.

vi. Shutdown signals to various air handling units relative to the zone of fire.

vii. Fire water pumps running indications.

viii. Fire water pumps start push buttons.

ix. Controls of sirens.

x. Repeat alarm signal to various control rooms.

xi. Repeat alarm signal to mimic panel.

xii. Repeat alarm signal to repeat alarm panel.

xiii. Status of Battery Conditions.

5.3 Computer Aided Fire Alarm System

The microprocessor based analogue addressable fire detection and alarm system shall be computer aided utilizing distributed processing techniques. The system shall include the following as a minimum.

5.3.1 Central Fire Alarm Panel (CFAP)

5.3.1.1 The CFAP or central processing unit shall be a special purpose microprocessor operating under software program which shall provide central control and monitoring functions of the entire fire alarm system.

5.3.1.2 CFAP shall communicate with various Input / output devices, DGFAPs, repeat alarm panels, I/O multiplexer, mimic panels, industrial grade PCs, Visual Display Units (VDU), key boards, printers etc. located at central / various locations in the plant.

5.3.1.3 CFAP shall have the facility to scan the data received from the DGFAPs and shall send necessary information to the respective DGFAPs, repeat alarm panels, VDUs etc. through bi-directional communication network.

5.3.1.4 CFAP shall be modular in design and shall contain 100% redundant microprocessor-based master unit, processing units, signaling module and power suppl unit. The CFAP shall serve as an interface and controller for connected PCs having graphics/text facility, located at central location and DGFAP panel(s) distributed in various control rooms.

5.3.1.5 CFAP shall be designed specifically for fire alarm and protection system applications and shall provide status, alarm, shutdown signals in predefined manners, initiate alarms, synchronize all activities, provide repeat alarms and other signals as specified.

5.3.1.6 The CFAP shall have non-volatile memory for reliability and shall permit reprogramming by authorized personnel.

5.3.1.7 The CFAP shall provide various event-initiated programmed (EIP). EIP shall be initiated by any of the following user defined parameters; day, time, alarm, return to normal, change of status and hardware failure.

The system shall provide multi levels of command priority to assure that high level commands are not overridden by lower-level commands.

5.3.1.8 CFAP shall have the facility to display the affected area on the VDU and provide the instructions to suppress the cause. High resolution graphic software shall be provided for display. The graphics shall have many layers of penetration. The VDU shall either be touch screen type or menu driven using mouse/keyboard. However, instead of graphic display, VDU with only text display shall be provided, if specified in the data sheets.

5.3.1.9 Unless otherwise specified in the data sheet CFAP shall be designed to provide multicolor display on the VDU.

5.3.1.10 Suitable communication interface cards shall be provided in CFAP to interface with DGFAPs, repeat alarm panels etc.

5.3.1.11 PC shall have as a minimum AMD Ryzen 5 7600 (AM5) or Intel Core i5-13400F, 32GB DDR5 (typically 2x16GB sticks running at 5200MHz or higher), 1TB PCIe Gen 4 M.2 NV Me SSD, serial and parallel ports suitable for the devices connected. PC shall be complete with 101 key key-board with English language characters, 17” FHD resolution, 60HZ, OLED/IPS non- glare screen with front mounted power switch, brightness/contrast control, horizontal/vertical position and size control etc. The monitor shall be on a swivel base.

5.3.1.12 Monitor screen shall have dedicated areas for the following functions:

a) Alarms and returns to normal
b) Menus, commands, reports and programming
c) Time, day and date

5.3.1.13 Alarms and all other changes of status shall be displayed on the screen area reserved for this information. The following information shall be provided as a minimum:

a) Condition of detector (Alarm / Trouble)
b) Type of detector
c) Location of detector and numerical system address
d) Emergency instructions.

On receipt of alarm, an audible alarm shall sound and the condition and detector type shall flash until acknowledged by the operator. Return to normal shall also be annunciated and shall require operator acknowledgement.

5.3.1.14 The system shall have multiple levels of priority for displaying alarms. Should multiple alarms occur, the first received, highest priority alarm shall be displayed on the screen until acknowledged by the operator. Then the next highest priority alarm shall be displayed until acknowledged etc. Should a higher priority alarm occur, the higher priority alarm shall replace the lower priority alarm on the screen and the lower priority alarm shall be retained in memory and re-displayed after the higher priority alarm is acknowledged.

5.3.1.15 The system shall provide sufficient memory so that no alarm shall be lost. A message highlighted in reverse video, shall advise the operator when other unacknowledged alarms are present in the system.

5.3.1.16 The VDU keyboard shall use function keys with English descriptions to initiate all system functions. Typing abbreviations or using unlabeled or numerical function buttons is unacceptable. When a function key is pressed, the monitor shall lead the operator through the function by asking him to choose one

of several clearly defined options (menu penetration). When a specific detector must be addressed, a distinct numerical keypad shall be used to speed up and simplify the operation. On command from the operator, system reports either shall be displayed on the VDU screen or output on the printer, as desired by the operator.

5.3.1.17 Multiple levels of access to the system shall be provided for operators and supervisors via user defined passwords. The following functions shall be provided for each levels:

a) Operator level access functions

- Display system directory, definable by detector type
- Display status of an individual detector
- Manual command (alarm with an associated command i.e. secure / accesses / alarm – shall use the same system address for both functions)
- Report generation, definable by detector type. Reports shall be output on either the monitor or printer, as desired by the operator.

b) Supervisor Level Access Functions

- Reset time and date
- Holiday scheduling
- Enable / disable event-initiated programmed, printouts, initiators.
- Enable / disable individual hardware points and system components.

5.3.1.18 Printer used in the system shall provide real time records of the system events and provide system reports on demand.

5.3.1.19 Printer shall be microprocessor controlled, high speed, read only (RO) type.

5.3.1.20 The system printer (PTR) shall be a letter quality dot-matrix printer, 132 character wide and shall have a 96-character set. The printer shall have a microprocessor controlled bi-directional logic seeking head. The printing speed shall not be less than 300 cps in draft mode.

5.3.1.21 The printer shall automatically record in English all alarm's, troubles, acknowledgements, return to normal, manual commands, plus those automatic commands selected by the user.

5.3.1.22 Alarms shall be highlighted differently than other traffic and shall be recorded in English, including type, location, time, date and numerical address of alarm detector. Multiple alarms shall be recorded in the order received, regardless of alarm priority. If an alarm is received during the preparation of reports, the printer shall interrupt the report to record the alarm and afterwards resume the report automatically.

5.3.1.23 Automatic (EIP) commands shall be recorded automatically. All changes to system programming shall be recorded automatically.

5.3.1.24 Printer shall use fanfold paper and shall accommodate an original and two copies. Paper shall be tractor fed. Each page shall be automatically timed, dated and page numbered to detect unauthorized removal.

5.3.1.25 Printer shall be desk top unit and shall be styled to match the VDU.

5.3.1.26 The printer shall have an indicator to alert the operator that Pape has run out.

5.3.1.27 The printer shall have a self-test feature to verify printer operability even when off line.

5.3.1.28 To achieve 100% redundancy, 2PCs, VDUs, keyboards and printers shall be provided for communication with the 100% redundant central processing unit of the CFAP, if specified in the material requisition / data sheets.

5.3.1.29 The central processing unit, along with PCs and their peripherals shall be housed in a console type enclosure made out of minimum 16-gauge CRCA sheets.

5.3.1.30 All cabling between the central processing unit, PCs and their peripherals shall be in the vendor's scope. Arrangements shall be made within the console enclosure for distribution of power supply to various equipment's.

5.3.2 **Data Gathering Cum Fire Alarm Panel (DGFAP)**

5.3.2.1 The DGFAP shall act as a control and interface point between manual/automatic fire detectors and the CFAP.

The DGFAP shall be UL listed and FM approved, suitable for application in fire detection and alarm systems. Approvals from agencies other than UL/FM shall be subject to MECON review.

5.3.2.2 All manual/automatic fire detectors shall be connected to DGFAP. Input signals shall be processed by the DGFAP. It shall also have the facility to control all the input data received from different field devices. Field devices can be automatic fire detectors, break glass boxes, switches and process parameters.

5.3.2.3 The DGFAP shall have its own microprocessor and non-volatile memory.

5.3.2.4 The DGFAP shall have the facility to transfer all data to CFAP. It shall be possible to re-programmed the operations at site. The DGFAP shall have the capability of standalone operation in case of communication failure with the CFAP/other DGFAPs.

5.3.2.5 The DGFAP shall have at least the following facilities:

- External power supply with standby backup (Integral charger and battery may be accepted in case SMF batteries are specified in data sheets).
- Alarm and trouble / fault indications, through 2x40 character fluorescent alphanumeric display.
- Self-diagnostic facility.
- Interface for data communication to other DGFAPs, CFAP, remote text or graphics displays, repeat alarm panels etc.
- Detector or loop disablement and restoration.
- Message, data storage in non-volatile memory.

- Change/examination of sensitivity of various detectors.
- Hooter with reset facility
- Battery low indication
- Hardwired potential free contacts for shutdown signals etc. as defined in clause 5.2.5.1

5.3.2.6 Simultaneous display of Fire and Fault indication on DGFAP shall be provided on the alpha-numeric display (LED type) with the action message that is to be taken by the operator.

5.3.2.7 All the data gathering panels shall have alarm verification capability.

5.3.2.8 DGFAP shall have repeating facility to remote area. Necessary hardware / software shall be provided for this purpose.

5.3.2.9 DGFAP shall provide indications for communication with the CFAP, as well as, alarm and trouble conditions in the sensor loops.

5.3.3 **Repeat Alarm Panels**

5.3.3.1 Repeat alarm panels shall be fabricated out of 16-gauge CRCA sheets. The panels shall have IP-41 enclosure protection as a minimum. The repeat alarm panel shall be suitable for wall mounting. Cable entry provision shall be from bottom by means of cable glands. The panels shall be epoxy painted fire red to shade 536 of IS-5.

5.3.3.2 Repeat alarm panel shall be capable to receive signals from either the CFAP or the DGFAP and shall have provision to annunciate the same using audio-visual annunciation.

5.3.3.3 Visual annunciation shall be by means of 2x40 character fluorescent display on the panel front. The display shall indicate the detector address, its location, action to be taken in case of fire etc. The display shall indicate the instances of fire and fault.

5.3.3.4 Electronic hooters shall be provided for audible annunciation.

5.3.3.5 Additionally LEDs shall be provided for power ON, fault, fire, multiple alarm indication etc. Push buttons shall be provided for alarm accept and hooter reset, as well as, for LED test. Switch shall be provided for power ON.

5.3.3.6 Repeat alarm panel shall derive power from the associated fire alarm panel.

5.3.4 **Data Highway**

5.3.4.1 Communication between CFAP, DGFAPs, repeater panels etc. shall be realized by means of data highway. Unless specified otherwise, data highway shall consist of 1.5mm^2 copper conductor, twisted pair, PVC insulated, PVC inner sheathed, overall screened and overall PVC sheathed cables. Data highway cables shall be 100% redundant, to ensure reliability of communication.

Wherever required, due to cable capacitance limitation, modems shall be employed for data highway communication. In such cases, modems shall be powered as well as located in the respective DGFAPS or CFAP.

5.3.4.2 Alternately, optical fiber cables, may be used as data highway. The fibers shall be as per latest CCITT recommendation for single mode optical fibers and shall be laid in slots/tubes filled-up with moisture resistant jelly. Polymer coated aluminum tape around the cable core shall provide a moisture barrier. Optical fiber cables shall have an inner polyethylene sheath with corrugated steel tape armoring and a polyethylene outer sheath.

5.4 **Panel Construction (Central Fire Alarm Panel, Zonal Fire Alarm Panel, Data Gathering cum Fire Alarm Panel, Repeat Alarm Panel etc.)**

5.4.1 Panel(s) shall be free standing/wall mounting type, made out of minimum 16-gauge CRCA sheets. Doors and covers shall be made out of 14-gauge CRCA sheets. The panel shall be naturally ventilated totally enclosed dust and vermin proof with IP-41 enclosure as a minimum. The construction of

the panel enclosure shall be designed to allow for at least 10% expansion for future additions without involving any major modifications in the system. In general, these panels, shall generate/receive/display the required signals for Fire Alarm and Suppression systems.

5.4.2 **Equipment Mounting**

5.4.2.1 All apparatus, instruments and alarm facias mounted on the panel front shall be flush mounted type. The panel wiring shall not be terminated directly on the base connector of PCBs. It shall either be terminated through a separate terminal block or multipin connectors. Routine calibration and adjustments shall be accessible from the front of the panel without having to remove any wiring or causing loss of the panel function. In addition, total removal of the instrument(s) and replacement with a spare shall be possible from the front of the panel.

5.4.2.2 All annunciator components except the alarm horn and auxiliary contact relays (if used) shall be mounted integrally in a protective enclosure. Sufficient spare terminals shall be provided to accommodate all spare / future alarm points in the display. Access shall be provided to permit checking and / or changing the wiring at these terminal strips.

5.4.2.3 Lamps shall be capable for removal and replacement from the panel front via individual snap out windows or a swing out hinged door on which all windows are mounted.

5.4.2.4 There shall be separate hooters for faults/ malfunction and fire alarm having distinct audible tones.

5.4.2.5 Fluorescent lamp(s) shall be installed within the panel to provide adequate lighting for maintenance of equipment’s. Door interlock switch shall be provided for this purpose.

5.4.2.6 Cable entry shall be from bottom unless otherwise specified in the enquiry document / data sheet. A terminal strip shall be provided for incoming / outgoing cables. Supporting facilities shall be provided for clamping the cables.

5.4.3 **Wiring and Terminals**

5.4.3.1 Wiring within the panel shall be in slotted plastic raceways enclosed with cover. Interconnecting wiring shall be done with 1 sq. mm. Cross-section, copper conductor, PVC insulated, 660V wires. Power circuit wiring shall be with minimum 2.5 sq.mm. cross section, copper conductor. Panels shall be supplied completely pre-wired including spare points of modules / controllers etc. so that only field termination is required before energization.

5.4.3.2 Cables shall be terminated on terminal blocks. Clamp type terminals shall be of spring-loaded, stacking type, mounted on rails. Terminals shall be sized to accept as a minimum 2.5 sq.mm. cross section conductors. Not more than one conductor shall be terminated on the outgoing side of each terminal. At least 20% spare terminals shall be provided in each panel.

5.4.3.3 Suitably sized terminals shall be provided for terminating main power supply cables.

5.4.4 **Cable Glands**

5.4.4.1 All the cable glands for outdoor application shall be weatherproof, nickel plated brass and double compression type, whereas those for indoor application shall be single compression type.

5.4.4.2 Cable glands for hazardous area equipment shall be flameproof, weatherproof and nickel plated brass double compression type.

5.4.5 **Earthing**

5.4.5.1 A common earth bar of minimum 25 x 3 mm copper or equivalent aluminum shall be provided throughout the length of the panel. All non-current carrying metallic parts of the panel mounted equipment shall be earthed. All doors and movable parts shall be connected to the earth bus by flexible jumpers. 2Nos. earth lugs shall be provided outside the panel.

5.4.6 **Name Plates**

5.4.6.1 All name plates for panel shall be engraved out of 3 ply (black-white-black) limacoid sheets or anodized aluminum. Back engraved Perspex sheet nameplates will also be acceptable. Engraving shall be done with square groove cutters. Hard paper or self-adhesive plastic tape nameplates will not be acceptable.

5.4.6.2 All panels mounted equipment's (e.g. lamps, push buttons, switches PCBs etc.) shall be provided with suitable nameplates.

5.4.6.3 Labels shall be provided for every component on the cards, connecting wires as well as for the terminals in the terminal strip inside the panel.

5.4.6.4 Special warning plates shall be provided on all removable covers or doors giving access to energized metallic parts above 24 volts.

5.4.7 **Painting**

5.4.7.1 All metal surfaces shall be thoroughly cleaned and degreased to remove mill scale, rust, grease and dirt. Fabricated structures shall be pickled and then rinsed to remove any trace of acid. The under surface shall be prepared by applying a coat of phosphate paint and a coat of yellow zinc chromate primer. The undersurface shall be made free from all imperfection before undertaking the finishing coat.

5.4.7.2 After preparation of the undersurface, the panel shall be epoxy painted with two coats of final paint. Alternatively the panels may be powder coated. The color shade of final paint shall be as specified in the data sheet. If not specified therein, the final paint shall be fire red, shade 536 of IS-5. The finished panels shall be dried in stoving oven in dust free atmosphere. Panel finish shall be free from imperfections like pin holes, orange peels, run-off paint etc.

All unpainted steel parts shall be cadmium plated or suitably treated to prevent rust-corrosion. Moving elements shall be greased.

6.0 AUTOMATIC FIRE DETECTORS AND ACCESSORIES

6.1 General Specifications

6.1.1 All the detectors shall be plug-in type and shall have twist lock action fitting. An LED shall be incorporated which shall normally flicker indicating alertness and should turn steady when a fire is sensed, enabling immediate identification of the affected detector.

6.1.2 The mounting base of all type of detectors shall be identical. It should be possible to plug-in any type of detector at any location without changing the base and without distributing the external wiring. The detector housing shall be damage resistant made of polycarbonate or aluminum with plug-in housing base of universal type suitable for either surface or recess mounting. Junction boxes for detector mounting shall be complete with terminal block, etc. Additional terminals shall be provided to fit end of line resistance, wherever applicable.

6.1.3 The detectors, which employ a Radio Active source shall be such that the strength of the Radio Active material shall not exceed 1 micro curie.

6.1.4 It shall be possible to install all type of detectors (manual as well as automatic) in the same fire alarm circuit/loop.

6.1.5 All the detectors shall have inbuilt safety device to monitor the removal and pilferage of the detector.

6.1.6 All the detectors shall be on the approved list of Loss Prevention Council, Under Writers Laboratory (USA) / Factory Mutual (USA) / Tariff Advisory Committee.

6.1.7 All detectors shall be suitable for operation at DC power supply. All analogue addressable detectors shall be suitable for installation using fault tolerant wiring (class-A, style-6 wiring as per NFPA). Tapping shall not be permitted in the case of such wiring.

6.2 All automatic detectors for microprocessor-based fire alarm system shall be analogue addressable type. The analogue addressable detectors shall be continuously monitored to measure any change in their sensitivity due to the environment (dirt, dust, temperature, humidity etc.). These detectors shall give an advance indication to the panel regarding the need for maintenance. The analogue reading sent by the detectors shall be sensed and if there is a rapid increase, an alarm shall be generated. However, if there is a gradual increase in the analogue reading, a maintenance alert shall be generated by the DGFAP. It shall be possible to generate maintenance reports from DGFAP.

6.3 All analogue addressable detectors shall preferably have the facility to set the addresses from the DGFAP. Alternately dip switches in the detector base shall be used for setting the detector address.

Manual call points/break glass boxes for microprocessor-based fire alarm system shall be addressable type. Each device shall have its own address module which shall send a status signal to the DGFAP regarding its state of actuation.

6.4 **Heat Detectors**

6.4.1 Heat detectors shall be of dual thermistor (negative temperature coefficient resistor)/bimetallic/electro-pneumatic/thermo electric type, working on the two methods i.e. rate of rise and fixed temperature.

6.4.2 The rate of rise element shall be carefully calibrated to ignore any normal fluctuation in temperature, but to respond quickly when the temperature rise is 9`C or more per minute.

6.4.3 The fixed temperature feature should be entirely independent of the rate of rise element. The operating temperature of fixed temperature element should be factory set at 57`C □ 5`C.

6.4.4 The detector shall be self-restoring type ensuring repeated use and easy maintenance.

6.4.5 System should work on both parameters as a cross zoning feature, also system shall be programmable type so that settings can be changed in accordance with site requirement.

6.5 **Ionization Type Smoke Detector**

6.5.1 Smoke detector shall be solid state type, working on ionization principle and shall preferably be of dual chamber and dual source type.

6.5.2 The radioactive source used in the detector shall not emit beta and gamma rays and the strength of Radioactive material shall not be more than 1 micro curie.

6.5.3 The detector shall be able to sense incipient fire by detecting the presence of visible and invisible products of combustion like wood, paper, ammonia processing paper, cloth, PVC, Bakelite, nylon, foam, acrylic, thermocole, Photo film, nylon, polyester, painted sheets, Teflon, leather etc.

6.5.4 The sensitivity of the detector shall not vary with change in ambient temperature, humidity, pressure or permissible voltage variation. Its performance shall not be affected by an air current of 5 meter per second. It shall have an inbuilt arrangement such that puffs of smoke or hot air pockets do not inadvertently trigger the alarm. The detector shall be protected against dust accumulation / ingress. It shall have insect resistant screen to prevent nuisance alarms. All detectors shall be identical in construction, design and characteristics to facilitate easy replacement.

6.6 **Smoke Detector with Aspirators**

System Specifications

6.6.1 **General**

A Very Early Smoke Detection System shall be installed throughout the areas nominated on the drawings.

The system shall consist of highly sensitive LED-based smoke detectors with aspirators connected to networks of sampling pipes.

The detector shall be equipped with dedicated sensing devices for one or two channels and thus be able to identify instantly which pipe is carrying smoke. The detector should have a flow sensor which should be of twin thermal sensors and the maximum suction pressure should be 400 pa only.

The detector shall be easy configurable to the most widely used sampling pipe network topologies, as defined by NFPA 72.

When required, an optional display unit shall be provided to monitor each detector, and a PC based programming tool shall be supplied to configure the system.

6.6.2 Approvals

The very early smoke detection system must be tested according to the NFPA and bear the CE mark. It must be of a type submitted to, tested, approved, and/or listed by UL/FM/LPCB.

6.6.3 System Description

6.6.3.1 Design Requirements

Shall consist of aspiration unit one or two highly sensitive LED-based smoke detectors, each one forming an independent measuring device for the two pipe networks.

The detection unit shall be able to identify which sampling pipe is carrying smoke.

It shall be modular, with each detector optionally monitored by a display featuring LED bar graphs indicating the smoke density of each pipe network. The system shall be configured by a built-in programming device for standard configurations and a PC based Programmer for more demanding applications.

The system shall allow programming of:

- four smoke threshold alarm levels per pipe (sector);
- time delays;

- faults including airflow, detector, power, filter and network as well as an indication of the urgency of the fault;
- three (3), eight (8) or thirteen (13) configurable relay outputs for remote indication of alarm and fault conditions.

It shall consist of an air sampling pipe network to transport air to the detection system, supported by calculations from a computer-based design modelling tool.

Optional equipment may include SD card-based event tracing and data logging, loop interface and/or a high-level interface with the building fire alarm system.

6.6.3.2 Performance Requirements

- Shall be tested and approved according to NFPA-72 to cover up to 2,880 sq.m.
- Shall be approved to provide very early smoke detection and provide four output levels per channel / pipe network. These levels shall be programmable and able to be set at sensitivities ranging from 0.002 – 10% obs. / m.
- Shall report any fault on the unit by using configurable fault output relays or via addressable loop to a Fire Alarm Control Panel (FACP).
- Shall incorporate a flow sensor in each pipe and provide staged airflow faults.
- Suction Power shall be 400Pa.

6.6.4 Submittals

Product data and site drawings shall be submitted and shall include pipe layout, operational calculations and performance criteria.

6.6.5 Technology

Both Light Scattering and Particle Discrimination shall be utilized in this device as follows:

The Detection Chamber shall be of the mass Light Scattering type and capable of detecting a wide range of smoke particle types of varying size. A particle discrimination method shall be employed for the purposes of preventing large particles from affecting the true smoke reading.

The Detection Chamber shall be specifically designed for aspirating systems providing smooth air flow for keeping dust contamination and noise dissipation at negligible level.

The detector shall use adaptive algorithms to adjust the sensitivity from that set during commissioning (auto learn mode).

6.6.6 **Products**

i. Detector Assembly

The unit shall be housed in a mounting box and shall be arranged in such a way that air is drawn from the fire risk and a sample passed through the Smoke Sensing Devices by the aspirator.

The system shall utilize the principle of sampling each of the two pipe networks (sectors) individually and simultaneously. If an alarm threshold level is reached an alarm is indicated and signaled.

The Smoke Sensing Device shall be LED-based type and shall have an obscuration sensitivity range of 0.002 – 10 % Obs. / m.

The Detector shall have four independent field programmable smoke alarm thresholds per pipe (sector) and a programmable time delay assigned to each threshold. The detector shall be suitable to ambient temperature at -30°C to 60°C.

The Detector shall also incorporate facilities to transmit the following faults and warnings Smoke Sensing Device Air Flow System Communication Power

Faults and Warnings: Warnings shall be considered as servicing or maintenance signals. Faults indicate the unit may not be able to detect smoke.

The detector shall have two separate sample pipe inlets (flow circuits) and must contain a flow sensor for each pipe inlet.

a) Central Fire Alarm Panel with Mimic
b) Zonal Fire Alarm Panel
c) Repeat Alarm Panel / Annunciation Panel

5.1.2 Microprocessor based system shall generally comprise of the following equipment's used in conjunction with analogue addressable automatic fire alarm detectors and manual call points. Exact requirements shall be specified in enquiry documents / data sheets.

a) Central Fire Alarm Panel / Central Processing Unit
b) Data Gathering cum Fire Alarm Panel (DGFAP)
c) Repeat Alarm Panel

5.2 Addressable Fire Alarm System (PLC Based)

5.2.1 Central Fire Alarm Panel

5.2.1.1 Central fire alarm panel shall gather information from various Zonal Alarm panels regarding the status of activation of detectors / manual call points etc. on an overall basis.

5.2.1.2 Central fire alarm panel shall house starter control(s) for siren(s), in order to generate an alarm audible in the entire plant in the event of fire.

5.2.1.3 If specified in the enquiry document / data sheets, the central fire alarm panel shall have provision for signals, alarms etc. as specified under clauses 5.2.5.1.

5.2.1.4 A mimic, unless otherwise specified in the enquiry document shall form an integral part of the central fire alarm panel and shall be located at the top of the panel. If separate, mimic panel shall either be wall mounting or free-standing floor mounted type. Two nos. LEDs shall be provided for each zone on mimic panel. It shall derive the power supply from Fire Alarm panel. Mimic panel shall be illuminated through potential free contacts available in fire alarm panel.

LEDs on the mimic panel shall be arranged on a graphic mimic of the plant/area covered by the mimic panel. The LEDs shall be arranged on the basis of zones, unit wise, building wise, detector / manual call point wise or a combination of the above as described in the enquiry document/data sheets.

5.2.1 Circuit Description and Operational Requirements

5.2.1.4 The system shall be modular in construction to facilitate future extension/modification and shall include fire monitoring PCB, output relays, annunciators, indicating lamps, switches, push buttons etc.

5.2.1.5 Static components shall be mounted on plug-in type printed circuit boards (PCBs). PCBs for identical logic circuits shall be interchangeable. Connections to and from the PCBs shall be taken through gold plated edge connectors only. Plug and sockets of heavy-duty type shall be used for PCBs. Card edge connecting pins shall not be acceptable. PCBs shall be coated with the antifungals chemicals on both sides and shall be suitable for tropical climate.

5.2.1.6 "Fail Safe" feature to signal the failure in the circuitry shall be incorporated in the logic circuit and operation of the alarm system shall be on opening normally closed field contact.

5.2.1.7 Test facility through common "Test" push button shall be provided for complete functional test of each group of logic circuits, audio and visual flasher circuit, lamps etc.

5.2.1.8 The annunciation circuit design shall ensure that momentary short circuit in the lamp circuit does not adversely affect the performance of the system. Visual and audible alarm circuits shall be independent i.e. the failure of one will not affect the other.

5.2.1.9 The circuit shall be so designed that silencing of the current alarm by ACCEPT push button shall not prevent initiation of fire alarm in case of subsequent 'FIRE' signal received from any other location.

5.2.1.10 The field contact wiring will be carried out by using multicore, copper conductor, PVC insulated and armored cable which may be running close to power cables. Hence the logic circuitry shall be designed with sufficiently high signal-to noise ration to avoid spurious actuation due to noise induced in the field wiring because of proximity with power cables. Adequate noise filters and time delay shall be incorporated at the input stages to reduce the effect of the noise.

5.2.1.11 A minimum of two lamps shall be provided in parallel for each fire loop to increase the reliability of the visual alarm.

5.2.1.12 Fire alarm loop card shall be capable to receive the signal from break glass box, Heat, UV, IR, ionization, optical type detector, heat sensing cable, linear beam detector and any combination thereof.

5.2.1.13 Whenever the fire is detected in any zone, both audible and visual (flashing) alarm shall be raised in the fire alarm panel indicating the corresponding location of fire zone. On pressing the 'ACCEPT' push button, the audible alarm shall stop and the lamp shall glow steadily. The panel shall be brought to normal condition by pressing 'RESET' push button (only after the field conditions are normalized). It shall be possible to manually initiate the audio alarm in addition to automatic operation.

If specified in the material requisition / data sheet, the system shall be provided with a siren to be located at a suitable location in the plant. The controls for the siren shall form an integral part of the Fire Alarm Panel. The starter for the siren shall be direct-on-line type, weather proof shall be in an IP-55 enclosure, suitable for outdoor installation. The enclosure shall be epoxy painted fire red, to shade 536 of IS-5.

5.2.2 **Zonal Fire Alarm Panel**

5.2.2.1 Zonal Fire Alarm Panel shall gather information from various detectors / manual call points connected to its loop. It shall monitor the status of detectors, cable faults etc.

Zonal Fire Alarm Panel shall have provision to annunciate the fire/fault signals received from the detector/manual call points connected to its loops. LEDs shall be provided for visual annunciation and electronic hooters as audible alarm.

5.2.2.2 Additionally LEDs shall be provided for power ON, fault, fire, multiple alarm indication etc. Push buttons shall be provided for alarm accept, hooter reset, LED test etc. Power ON switch shall be provided.

5.2.2.3 Zonal Fire Alarm Panel shall generate output contacts for signals to repeat alarm panels, central fire alarm panel etc. It shall generate potential free contacts for energization of hooters, exit signs, tripping of owner's AHU and pressurization system etc.

5.2.2.4 If specified in the enquiry document/data sheets, the zonal fire alarm panel shall have provision for the signals, alarms etc. as specified under clause 5.2.5.1

5.2.3 **Repeat Alarm Panel**

5.2.3.1 Repeat alarm panels shall generally be constructed as specified in clause 5.4 and shall be wall mounting type.

Repeat alarm panel shall receive signals from Central Fire Alarm Panel or Zonal Fire Alarm Panel shall have provision to annunciate the same using audio-visual annunciation. LEDs shall be provided for visual annunciation and electronic hooters as audible annunciation. Additionally LEDs shall be provided for power ON, fault, fire, multiple alarm indication etc. Push buttons shall be provided for alarm accepts and hooter reset, as well as, for LEDs test. Switch shall be provided for power ON.

5.2.3.2 Repeat alarm panels may either have

a) LEDs arranged in a matrix (rows and columns) along with text engraved alongside each LED indicating the zone where the fault/fire has occurred.

OR

b) LEDs arranged on a graphic mimic of the zones/areas covered by the repeat alarm panel.

5.2.3.3 Repeat alarm panels shall derive power from the associated fire alarm panel.

5.2.4 **Alarm, Signal and Control Requirements**

5.2.4.1 In addition to the initiation of fire alarm, zonal, central fire alarm panels shall have the facility for following status signals, status alarms and shutdown signals if specified in data sheets / drawings.

i. Automatic signal for release of clean agent/CO_2 release for protected area and release alarm in control room.

ii. Selector switches for primary or secondary clean agent/CO_2 supply for each skid / protected area.

iii. Manual push button for discharge of clean agent/CO_2 in each protected area (after alarm and 30 seconds time delay).

iv. Clean agent/CO_2 discharge inhibit push button for each protected area.

v. Deluge valve activation push buttons, deluge valve test push buttons and deluge valve activated status lamps.

vi. Shutdown signals to various air handling units relative to the zone of fire.

vii. Fire water pumps running indications.

viii. Fire water pumps start push buttons.

ix. Controls of sirens.

x. Repeat alarm signal to various control rooms.

xi. Repeat alarm signal to mimic panel.

xii. Repeat alarm signal to repeat alarm panel.

xiii. Status of Battery Conditions.

5.3 Computer Aided Fire Alarm System

The microprocessor based analogue addressable fire detection and alarm system shall be computer aided utilizing distributed processing techniques. The system shall include the following as a minimum.

5.3.1 Central Fire Alarm Panel (CFAP)

5.3.1.1 The CFAP or central processing unit shall be a special purpose microprocessor operating under software program which shall provide central control and monitoring functions of the entire fire alarm system.

5.3.1.2 CFAP shall communicate with various Input / output devices, DGFAPs, repeat alarm panels, I/O multiplexer, mimic panels, industrial grade PCs, Visual Display Units (VDU), key boards, printers etc. located at central / various locations in the plant.

5.3.1.3 CFAP shall have the facility to scan the data received from the DGFAPs and shall send necessary information to the respective DGFAPs, repeat alarm panels, VDUs etc. through bi-directional communication network.

5.3.1.4 CFAP shall be modular in design and shall contain 100% redundant microprocessor-based master unit, processing units, signaling module and power suppl unit. The CFAP shall serve as an interface and controller for connected PCs having graphics/text facility, located at central location and DGFAP panel(s) distributed in various control rooms.

5.3.1.5 CFAP shall be designed specifically for fire alarm and protection system applications and shall provide status, alarm, shutdown signals in predefined manners, initiate alarms, synchronize all activities, provide repeat alarms and other signals as specified.

5.3.1.6 The CFAP shall have non-volatile memory for reliability and shall permit reprogramming by authorized personnel.

5.3.1.7 The CFAP shall provide various event-initiated programmed (EIP). EIP shall be initiated by any of the following user defined parameters; day, time, alarm, return to normal, change of status and hardware failure.

The system shall provide multi levels of command priority to assure that high level commands are not overridden by lower-level commands.

5.3.1.8 CFAP shall have the facility to display the affected area on the VDU and provide the instructions to suppress the cause. High resolution graphic software shall be provided for display. The graphics shall have many layers of penetration. The VDU shall either be touch screen type or menu driven using mouse/keyboard. However, instead of graphic display, VDU with only text display shall be provided, if specified in the data sheets.

5.3.1.9 Unless otherwise specified in the data sheet CFAP shall be designed to provide multicolor display on the VDU.

5.3.1.10 Suitable communication interface cards shall be provided in CFAP to interface with DGFAPs, repeat alarm panels etc.

5.3.1.11 PC shall have as a minimum AMD Ryzen 5 7600 (AM5) or Intel Core i5-13400F, 32GB DDR5 (typically 2x16GB sticks running at 5200MHz or higher), 1TB PCIe Gen 4 M.2 NV Me SSD, serial and parallel ports suitable for the devices connected. PC shall be complete with 101 key key-board with English language characters, 17” FHD resolution, 60HZ, OLED/IPS non- glare screen with front mounted power switch, brightness/contrast control, horizontal/vertical position and size control etc. The monitor shall be on a swivel base.

5.3.1.12 Monitor screen shall have dedicated areas for the following functions:

a) Alarms and returns to normal
b) Menus, commands, reports and programming
c) Time, day and date

5.3.1.13 Alarms and all other changes of status shall be displayed on the screen area reserved for this information. The following information shall be provided as a minimum:

a) Condition of detector (Alarm / Trouble)
b) Type of detector
c) Location of detector and numerical system address
d) Emergency instructions.

On receipt of alarm, an audible alarm shall sound and the condition and detector type shall flash until acknowledged by the operator. Return to normal shall also be annunciated and shall require operator acknowledgement.

5.3.1.14 The system shall have multiple levels of priority for displaying alarms. Should multiple alarms occur, the first received, highest priority alarm shall be displayed on the screen until acknowledged by the operator. Then the next highest priority alarm shall be displayed until acknowledged etc. Should a higher priority alarm occur, the higher priority alarm shall replace the lower priority alarm on the screen and the lower priority alarm shall be retained in memory and re-displayed after the higher priority alarm is acknowledged.

5.3.1.15 The system shall provide sufficient memory so that no alarm shall be lost. A message highlighted in reverse video, shall advise the operator when other unacknowledged alarms are present in the system.

5.3.1.16 The VDU keyboard shall use function keys with English descriptions to initiate all system functions. Typing abbreviations or using unlabeled or numerical function buttons is unacceptable. When a function key is pressed, the monitor shall lead the operator through the function by asking him to choose one

of several clearly defined options (menu penetration). When a specific detector must be addressed, a distinct numerical keypad shall be used to speed up and simplify the operation. On command from the operator, system reports either shall be displayed on the VDU screen or output on the printer, as desired by the operator.

5.3.1.17 Multiple levels of access to the system shall be provided for operators and supervisors via user defined passwords. The following functions shall be provided for each levels:

a) Operator level access functions

- Display system directory, definable by detector type
- Display status of an individual detector
- Manual command (alarm with an associated command i.e. secure / accesses / alarm – shall use the same system address for both functions)
- Report generation, definable by detector type. Reports shall be output on either the monitor or printer, as desired by the operator.

b) Supervisor Level Access Functions

- Reset time and date
- Holiday scheduling
- Enable / disable event-initiated programmed, printouts, initiators.
- Enable / disable individual hardware points and system components.

5.3.1.18 Printer used in the system shall provide real time records of the system events and provide system reports on demand.

5.3.1.19 Printer shall be microprocessor controlled, high speed, read only (RO) type.

5.3.1.20 The system printer (PTR) shall be a letter quality dot-matrix printer, 132 character wide and shall have a 96-character set. The printer shall have a microprocessor controlled bi-directional logic seeking head. The printing speed shall not be less than 300 cps in draft mode.

5.3.1.21 The printer shall automatically record in English all alarm's, troubles, acknowledgements, return to normal, manual commands, plus those automatic commands selected by the user.

5.3.1.22 Alarms shall be highlighted differently than other traffic and shall be recorded in English, including type, location, time, date and numerical address of alarm detector. Multiple alarms shall be recorded in the order received, regardless of alarm priority. If an alarm is received during the preparation of reports, the printer shall interrupt the report to record the alarm and afterwards resume the report automatically.

5.3.1.23 Automatic (EIP) commands shall be recorded automatically. All changes to system programming shall be recorded automatically.

5.3.1.24 Printer shall use fanfold paper and shall accommodate an original and two copies. Paper shall be tractor fed. Each page shall be automatically timed, dated and page numbered to detect unauthorized removal.

5.3.1.25 Printer shall be desk top unit and shall be styled to match the VDU.

5.3.1.26 The printer shall have an indicator to alert the operator that Pape has run out.

5.3.1.27 The printer shall have a self-test feature to verify printer operability even when off line.

5.3.1.28 To achieve 100% redundancy, 2PCs, VDUs, keyboards and printers shall be provided for communication with the 100% redundant central processing unit of the CFAP, if specified in the material requisition / data sheets.

5.3.1.29 The central processing unit, along with PCs and their peripherals shall be housed in a console type enclosure made out of minimum 16-gauge CRCA sheets.

5.3.1.30 All cabling between the central processing unit, PCs and their peripherals shall be in the vendor's scope. Arrangements shall be made within the console enclosure for distribution of power supply to various equipment's.

5.3.2 **Data Gathering Cum Fire Alarm Panel (DGFAP)**

5.3.2.1 The DGFAP shall act as a control and interface point between manual/automatic fire detectors and the CFAP.

The DGFAP shall be UL listed and FM approved, suitable for application in fire detection and alarm systems. Approvals from agencies other than UL/FM shall be subject to MECON review.

5.3.2.2 All manual/automatic fire detectors shall be connected to DGFAP. Input signals shall be processed by the DGFAP. It shall also have the facility to control all the input data received from different field devices. Field devices can be automatic fire detectors, break glass boxes, switches and process parameters.

5.3.2.3 The DGFAP shall have its own microprocessor and non-volatile memory.

5.3.2.4 The DGFAP shall have the facility to transfer all data to CFAP. It shall be possible to re-programmed the operations at site. The DGFAP shall have the capability of standalone operation in case of communication failure with the CFAP/other DGFAPs.

5.3.2.5 The DGFAP shall have at least the following facilities:

- External power supply with standby backup (Integral charger and battery may be accepted in case SMF batteries are specified in data sheets).
- Alarm and trouble / fault indications, through 2x40 character fluorescent alphanumeric display.
- Self-diagnostic facility.
- Interface for data communication to other DGFAPs, CFAP, remote text or graphics displays, repeat alarm panels etc.
- Detector or loop disablement and restoration.
- Message, data storage in non-volatile memory.

- Change/examination of sensitivity of various detectors.
- Hooter with reset facility
- Battery low indication
- Hardwired potential free contacts for shutdown signals etc. as defined in clause 5.2.5.1

5.3.2.6 Simultaneous display of Fire and Fault indication on DGFAP shall be provided on the alpha-numeric display (LED type) with the action message that is to be taken by the operator.

5.3.2.7 All the data gathering panels shall have alarm verification capability.

5.3.2.8 DGFAP shall have repeating facility to remote area. Necessary hardware / software shall be provided for this purpose.

5.3.2.9 DGFAP shall provide indications for communication with the CFAP, as well as, alarm and trouble conditions in the sensor loops.

5.3.3 **Repeat Alarm Panels**

5.3.3.1 Repeat alarm panels shall be fabricated out of 16-gauge CRCA sheets. The panels shall have IP-41 enclosure protection as a minimum. The repeat alarm panel shall be suitable for wall mounting. Cable entry provision shall be from bottom by means of cable glands. The panels shall be epoxy painted fire red to shade 536 of IS-5.

5.3.3.2 Repeat alarm panel shall be capable to receive signals from either the CFAP or the DGFAP and shall have provision to annunciate the same using audio-visual annunciation.

5.3.3.3 Visual annunciation shall be by means of 2x40 character fluorescent display on the panel front. The display shall indicate the detector address, its location, action to be taken in case of fire etc. The display shall indicate the instances of fire and fault.

5.3.3.4 Electronic hooters shall be provided for audible annunciation.

5.3.3.5 Additionally LEDs shall be provided for power ON, fault, fire, multiple alarm indication etc. Push buttons shall be provided for alarm accept and hooter reset, as well as, for LED test. Switch shall be provided for power ON.

5.3.3.6 Repeat alarm panel shall derive power from the associated fire alarm panel.

5.3.4 **Data Highway**

5.3.4.1 Communication between CFAP, DGFAPs, repeater panels etc. shall be realized by means of data highway. Unless specified otherwise, data highway shall consist of 1.5mm^2 copper conductor, twisted pair, PVC insulated, PVC inner sheathed, overall screened and overall PVC sheathed cables. Data highway cables shall be 100% redundant, to ensure reliability of communication.

Wherever required, due to cable capacitance limitation, modems shall be employed for data highway communication. In such cases, modems shall be powered as well as located in the respective DGFAPS or CFAP.

5.3.4.2 Alternately, optical fiber cables, may be used as data highway. The fibers shall be as per latest CCITT recommendation for single mode optical fibers and shall be laid in slots/tubes filled-up with moisture resistant jelly. Polymer coated aluminum tape around the cable core shall provide a moisture barrier. Optical fiber cables shall have an inner polyethylene sheath with corrugated steel tape armoring and a polyethylene outer sheath.

5.4 **Panel Construction (Central Fire Alarm Panel, Zonal Fire Alarm Panel, Data Gathering cum Fire Alarm Panel, Repeat Alarm Panel etc.)**

5.4.1 Panel(s) shall be free standing/wall mounting type, made out of minimum 16-gauge CRCA sheets. Doors and covers shall be made out of 14-gauge CRCA sheets. The panel shall be naturally ventilated totally enclosed dust and vermin proof with IP-41 enclosure as a minimum. The construction of

the panel enclosure shall be designed to allow for at least 10% expansion for future additions without involving any major modifications in the system. In general, these panels, shall generate/receive/display the required signals for Fire Alarm and Suppression systems.

5.4.2 **Equipment Mounting**

5.4.2.1 All apparatus, instruments and alarm facias mounted on the panel front shall be flush mounted type. The panel wiring shall not be terminated directly on the base connector of PCBs. It shall either be terminated through a separate terminal block or multipin connectors. Routine calibration and adjustments shall be accessible from the front of the panel without having to remove any wiring or causing loss of the panel function. In addition, total removal of the instrument(s) and replacement with a spare shall be possible from the front of the panel.

5.4.2.2 All annunciator components except the alarm horn and auxiliary contact relays (if used) shall be mounted integrally in a protective enclosure. Sufficient spare terminals shall be provided to accommodate all spare / future alarm points in the display. Access shall be provided to permit checking and / or changing the wiring at these terminal strips.

5.4.2.3 Lamps shall be capable for removal and replacement from the panel front via individual snap out windows or a swing out hinged door on which all windows are mounted.

5.4.2.4 There shall be separate hooters for faults/ malfunction and fire alarm having distinct audible tones.

5.4.2.5 Fluorescent lamp(s) shall be installed within the panel to provide adequate lighting for maintenance of equipment’s. Door interlock switch shall be provided for this purpose.

5.4.2.6 Cable entry shall be from bottom unless otherwise specified in the enquiry document / data sheet. A terminal strip shall be provided for incoming / outgoing cables. Supporting facilities shall be provided for clamping the cables.

5.4.3 **Wiring and Terminals**

5.4.3.1 Wiring within the panel shall be in slotted plastic raceways enclosed with cover. Interconnecting wiring shall be done with 1 sq. mm. Cross-section, copper conductor, PVC insulated, 660V wires. Power circuit wiring shall be with minimum 2.5 sq.mm. cross section, copper conductor. Panels shall be supplied completely pre-wired including spare points of modules / controllers etc. so that only field termination is required before energization.

5.4.3.2 Cables shall be terminated on terminal blocks. Clamp type terminals shall be of spring-loaded, stacking type, mounted on rails. Terminals shall be sized to accept as a minimum 2.5 sq.mm. cross section conductors. Not more than one conductor shall be terminated on the outgoing side of each terminal. At least 20% spare terminals shall be provided in each panel.

5.4.3.3 Suitably sized terminals shall be provided for terminating main power supply cables.

5.4.4 **Cable Glands**

5.4.4.1 All the cable glands for outdoor application shall be weatherproof, nickel plated brass and double compression type, whereas those for indoor application shall be single compression type.

5.4.4.2 Cable glands for hazardous area equipment shall be flameproof, weatherproof and nickel plated brass double compression type.

5.4.5 **Earthing**

5.4.5.1 A common earth bar of minimum 25 x 3 mm copper or equivalent aluminum shall be provided throughout the length of the panel. All non-current carrying metallic parts of the panel mounted equipment shall be earthed. All doors and movable parts shall be connected to the earth bus by flexible jumpers. 2Nos. earth lugs shall be provided outside the panel.

5.4.6 **Name Plates**

5.4.6.1 All name plates for panel shall be engraved out of 3 ply (black-white-black) limacoid sheets or anodized aluminum. Back engraved Perspex sheet nameplates will also be acceptable. Engraving shall be done with square groove cutters. Hard paper or self-adhesive plastic tape nameplates will not be acceptable.

5.4.6.2 All panels mounted equipment's (e.g. lamps, push buttons, switches PCBs etc.) shall be provided with suitable nameplates.

5.4.6.3 Labels shall be provided for every component on the cards, connecting wires as well as for the terminals in the terminal strip inside the panel.

5.4.6.4 Special warning plates shall be provided on all removable covers or doors giving access to energized metallic parts above 24 volts.

5.4.7 **Painting**

5.4.7.1 All metal surfaces shall be thoroughly cleaned and degreased to remove mill scale, rust, grease and dirt. Fabricated structures shall be pickled and then rinsed to remove any trace of acid. The under surface shall be prepared by applying a coat of phosphate paint and a coat of yellow zinc chromate primer. The undersurface shall be made free from all imperfection before undertaking the finishing coat.

5.4.7.2 After preparation of the undersurface, the panel shall be epoxy painted with two coats of final paint. Alternatively the panels may be powder coated. The color shade of final paint shall be as specified in the data sheet. If not specified therein, the final paint shall be fire red, shade 536 of IS-5. The finished panels shall be dried in stoving oven in dust free atmosphere. Panel finish shall be free from imperfections like pin holes, orange peels, run-off paint etc.

All unpainted steel parts shall be cadmium plated or suitably treated to prevent rust-corrosion. Moving elements shall be greased.

6.0 AUTOMATIC FIRE DETECTORS AND ACCESSORIES

6.1 General Specifications

6.1.1 All the detectors shall be plug-in type and shall have twist lock action fitting. An LED shall be incorporated which shall normally flicker indicating alertness and should turn steady when a fire is sensed, enabling immediate identification of the affected detector.

6.1.2 The mounting base of all type of detectors shall be identical. It should be possible to plug-in any type of detector at any location without changing the base and without distributing the external wiring. The detector housing shall be damage resistant made of polycarbonate or aluminum with plug-in housing base of universal type suitable for either surface or recess mounting. Junction boxes for detector mounting shall be complete with terminal block, etc. Additional terminals shall be provided to fit end of line resistance, wherever applicable.

6.1.3 The detectors, which employ a Radio Active source shall be such that the strength of the Radio Active material shall not exceed 1 micro curie.

6.1.4 It shall be possible to install all type of detectors (manual as well as automatic) in the same fire alarm circuit/loop.

6.1.5 All the detectors shall have inbuilt safety device to monitor the removal and pilferage of the detector.

6.1.6 All the detectors shall be on the approved list of Loss Prevention Council, Under Writers Laboratory (USA) / Factory Mutual (USA) / Tariff Advisory Committee.

6.1.7 All detectors shall be suitable for operation at DC power supply. All analogue addressable detectors shall be suitable for installation using fault tolerant wiring (class-A, style-6 wiring as per NFPA). Tapping shall not be permitted in the case of such wiring.

6.2 All automatic detectors for microprocessor-based fire alarm system shall be analogue addressable type. The analogue addressable detectors shall be continuously monitored to measure any change in their sensitivity due to the environment (dirt, dust, temperature, humidity etc.). These detectors shall give an advance indication to the panel regarding the need for maintenance. The analogue reading sent by the detectors shall be sensed and if there is a rapid increase, an alarm shall be generated. However, if there is a gradual increase in the analogue reading, a maintenance alert shall be generated by the DGFAP. It shall be possible to generate maintenance reports from DGFAP.

6.3 All analogue addressable detectors shall preferably have the facility to set the addresses from the DGFAP. Alternately dip switches in the detector base shall be used for setting the detector address.

Manual call points/break glass boxes for microprocessor-based fire alarm system shall be addressable type. Each device shall have its own address module which shall send a status signal to the DGFAP regarding its state of actuation.

6.4 **Heat Detectors**

6.4.1 Heat detectors shall be of dual thermistor (negative temperature coefficient resistor)/bimetallic/electro-pneumatic/thermo electric type, working on the two methods i.e. rate of rise and fixed temperature.

6.4.2 The rate of rise element shall be carefully calibrated to ignore any normal fluctuation in temperature, but to respond quickly when the temperature rise is 9`C or more per minute.

6.4.3 The fixed temperature feature should be entirely independent of the rate of rise element. The operating temperature of fixed temperature element should be factory set at 57`C □ 5`C.

6.4.4 The detector shall be self-restoring type ensuring repeated use and easy maintenance.

6.4.5 System should work on both parameters as a cross zoning feature, also system shall be programmable type so that settings can be changed in accordance with site requirement.

6.5 **Ionization Type Smoke Detector**

6.5.1 Smoke detector shall be solid state type, working on ionization principle and shall preferably be of dual chamber and dual source type.

6.5.2 The radioactive source used in the detector shall not emit beta and gamma rays and the strength of Radioactive material shall not be more than 1 micro curie.

6.5.3 The detector shall be able to sense incipient fire by detecting the presence of visible and invisible products of combustion like wood, paper, ammonia processing paper, cloth, PVC, Bakelite, nylon, foam, acrylic, thermocole, Photo film, nylon, polyester, painted sheets, Teflon, leather etc.

6.5.4 The sensitivity of the detector shall not vary with change in ambient temperature, humidity, pressure or permissible voltage variation. Its performance shall not be affected by an air current of 5 meter per second. It shall have an inbuilt arrangement such that puffs of smoke or hot air pockets do not inadvertently trigger the alarm. The detector shall be protected against dust accumulation / ingress. It shall have insect resistant screen to prevent nuisance alarms. All detectors shall be identical in construction, design and characteristics to facilitate easy replacement.

6.6 **Smoke Detector with Aspirators**

System Specifications

6.6.1 **General**

A Very Early Smoke Detection System shall be installed throughout the areas nominated on the drawings.

The system shall consist of highly sensitive LED-based smoke detectors with aspirators connected to networks of sampling pipes.

The detector shall be equipped with dedicated sensing devices for one or two channels and thus be able to identify instantly which pipe is carrying smoke. The detector should have a flow sensor which should be of twin thermal sensors and the maximum suction pressure should be 400 pa only.

The detector shall be easy configurable to the most widely used sampling pipe network topologies, as defined by NFPA 72.

When required, an optional display unit shall be provided to monitor each detector, and a PC based programming tool shall be supplied to configure the system.

6.6.2 Approvals

The very early smoke detection system must be tested according to the NFPA and bear the CE mark. It must be of a type submitted to, tested, approved, and/or listed by UL/FM/LPCB.

6.6.3 System Description

6.6.3.1 Design Requirements

Shall consist of aspiration unit one or two highly sensitive LED-based smoke detectors, each one forming an independent measuring device for the two pipe networks.

The detection unit shall be able to identify which sampling pipe is carrying smoke.

It shall be modular, with each detector optionally monitored by a display featuring LED bar graphs indicating the smoke density of each pipe network. The system shall be configured by a built-in programming device for standard configurations and a PC based Programmer for more demanding applications.

The system shall allow programming of:

- four smoke threshold alarm levels per pipe (sector);
- time delays;

- faults including airflow, detector, power, filter and network as well as an indication of the urgency of the fault;
- three (3), eight (8) or thirteen (13) configurable relay outputs for remote indication of alarm and fault conditions.

It shall consist of an air sampling pipe network to transport air to the detection system, supported by calculations from a computer-based design modelling tool.

Optional equipment may include SD card-based event tracing and data logging, loop interface and/or a high-level interface with the building fire alarm system.

6.6.3.2 Performance Requirements

- Shall be tested and approved according to NFPA-72 to cover up to 2,880 sq.m.
- Shall be approved to provide very early smoke detection and provide four output levels per channel / pipe network. These levels shall be programmable and able to be set at sensitivities ranging from 0.002 – 10% obs. / m.
- Shall report any fault on the unit by using configurable fault output relays or via addressable loop to a Fire Alarm Control Panel (FACP).
- Shall incorporate a flow sensor in each pipe and provide staged airflow faults.
- Suction Power shall be 400Pa.

6.6.4 Submittals

Product data and site drawings shall be submitted and shall include pipe layout, operational calculations and performance criteria.

6.6.5 Technology

Both Light Scattering and Particle Discrimination shall be utilized in this device as follows:

The Detection Chamber shall be of the mass Light Scattering type and capable of detecting a wide range of smoke particle types of varying size. A particle discrimination method shall be employed for the purposes of preventing large particles from affecting the true smoke reading.

The Detection Chamber shall be specifically designed for aspirating systems providing smooth air flow for keeping dust contamination and noise dissipation at negligible level.

The detector shall use adaptive algorithms to adjust the sensitivity from that set during commissioning (auto learn mode).

6.6.6 **Products**

i. Detector Assembly

The unit shall be housed in a mounting box and shall be arranged in such a way that air is drawn from the fire risk and a sample passed through the Smoke Sensing Devices by the aspirator.

The system shall utilize the principle of sampling each of the two pipe networks (sectors) individually and simultaneously. If an alarm threshold level is reached an alarm is indicated and signaled.

The Smoke Sensing Device shall be LED-based type and shall have an obscuration sensitivity range of 0.002 – 10 % Obs. / m.

The Detector shall have four independent field programmable smoke alarm thresholds per pipe (sector) and a programmable time delay assigned to each threshold. The detector shall be suitable to ambient temperature at -30°C to 60°C.

The Detector shall also incorporate facilities to transmit the following faults and warnings Smoke Sensing Device Air Flow System Communication Power

Faults and Warnings: Warnings shall be considered as servicing or maintenance signals. Faults indicate the unit may not be able to detect smoke.

The detector shall have two separate sample pipe inlets (flow circuits) and must contain a flow sensor for each pipe inlet.

The aspirator shall be a purpose-designed air pump. It shall be capable of allowing for an aggregate pipe length up to 900m in total, (2 pipe runs per Smoke Sensing Device) with a transport time as appropriate NFPA-72 code dictates.

The Assembly must contain 3 relays for alarm and fault conditions. The relays shall be software programmable to the required functions. The relays must be rated at 1 AMP at 30 VDC. Additional 10 relays shall be offered as an option and shall be individually programmable to the desired function.

The Assembly shall be able to be surface mounted to a wall or recessed in the wall cavity (the unit may be inverted in either option).

As an option, the assembly shall have built-in event logging on a removable media (SD card). It shall store smoke levels, contamination / compensation levels, alarm and pre-alarm conditions, operator actions and faults. It shall be capable of storing up to 16 Mio events.

As an option, the assembly shall have built-in data logging on a removable media (SD card). It shall store smoke level, alarm threshold settings and contamination level at one (1) Second interval. Each detector (zone) shall be capable of logging data spanning a period of more than 80 days. Logged data should be recorded using Excel format (.xls) for easy processing.

The two sensing detectors should be independent of each other i.e. a SD can be used to cover more than one area or can provide redundancy in just one area.
The system should have very low fan raise level i.e. noise dissipation (typ.@ 1m) should only be 32 – 43dB.
The detection system should show the level of smoke in the room and should have three ranges of sensitivity.
Flow sensor should be of twin thermal type and the system should have networking capability with RS485.

6.6.7 **Displays**

A detector Display module located within the detector shall provide the following features at a minimum:

- Three independent LED indicators per zone for detector fault, system fault and fire alarm
- A Reset button for unlatching all latched alarm conditions.

When required, a smoke level display module may be located within the detector featuring a 2 x 10 segment bar graph display.

6.6.8 **Programmers**

- A programmer module located within the detector shall support the following features at a minimum:
- System configuration according to NFPA-72 pipe networks and response classes (A, B or C).
- Initiation of self- setup cycle, to automatically configure the detector's alarm threshold settings to suit the current environment.
- Setting of date and time
- Viewing of the 99 most recently logged events
- Programming may be performed using a Windows® application running on a PC connected through a USB interface. It shall feature a multi-level password control to support the following features at a minimum:
- Viewing of the status of any device in the system.
- Adjustment of relative alarm thresholds for each pipe
- Software configuration for either 3, 7 or 12 relays
- Setting of day/night sensitivity thresholds.
- Initiation of adaptive learning algorithm, to automatically configure the detector's alarm threshold settings to suit the current environment.
- Programmable latching or non-latching relay operation.
- Programmable energized or de-energized relays.
- Programmable high and low flow settings for airflow supervision.
- Programmable aspirator speed control.

6.6.9 **Application**

- Detection Alarm Levels

- The LED based aspirating detection system shall have four (4) alarm thresholds per pipe (sector). The four alarm levels may be used as follows:

- Alarm Level1(Pre-Alarm)
  Alert someone and activate a visual and audible alarm in the fire risk area.
- Alarm Level 2 (Pre-Alarm)

Activate the electrical/electronic equipment shutdown relay and activate visual and audible alarms in the Security Office or other appropriate location.

- Alarm Level 3 (Pre-Alarm)
  Activate an alarm condition in the Fire Alarm Control Panel to call the Fire Brigade and activate all warning systems.
- Alarm Level 4 (Alarm)
  Activate evacuation action or shut down of systems.

6.6.10 Initial Detection Alarm Settings

- Initial settings for the alarm levels shall be determined by the requirements of the fire zone. However, the setting for Alarm Level 4 shall always appear as 100% on the bar graph scale. Default settings of the unit shall be:

- Alarm Level 1 30% of Alarm Level 4
- Alarm Level 2 50% of Alarm Level 4
- Alarm Level 3 70% of Alarm Level 4
- Alarm Level 4 0.13% Obs/m

- 6.6.11 Fault Alarms

- The Detector Fault relay shall be connected to the appropriate alarm zone on the Fire Alarm Control Panel in such a way that a detector fault would register a fault condition on the FACP. The warnings and isolate relays shall also be connected to the appropriate control system.

- 6.6.12 Power Supply and Batteries

- Power consumption of the device should be below 0.9 Watt (900 mW) under all circumstances (worst case with all LED lit).

- The system shall be powered from a regulated supply of nominally 24V DC. The battery charger and battery shall comply with the relevant Codes, Standards or Regulations. Typically 24 hours standby battery backup is required followed by 30 minutes in an alarm condition.

- Local Power Supply Standards that may apply: NFPA-72

6.6.13 Sampling Pipe Design

i) Sampling Pipe

The sampling pipe shall be smooth bore with an internal diameter of 25 mm. Normally, pipe with an outside diameter of 25 mm and internal diameter of 21 mm should be used.

The pipe material should be suitable for the environment in which it is installed, or should be the material as required by the specifying body.

All joints in the sampling pipe must be air tight and made by using solvent cement, except at entry to the detector.

All pipes should be supported at not less than 1.5 m centers, or that of the local codes or standards.

The far end of each trunk or branch pipe shall be fitted with an end cap.

ii) Sampling Holes

Sampling holes of appropriate size and spacing shall be drilled according to calculations by the engineering tool in compliance with the local code or standard.

Each sampling point shall be identified in accordance with Codes or Standards.

Consideration shall be given to the manufacturer's recommendations and standards in relation to the number of Sampling Points and the distance of the Sampling Points from the ceiling or roof structure and forced ventilation systems.

The Capillary Sampling Network

Where false ceilings are installed, the sampling pipe shall be installed above the ceiling, and Capillary Sampling Points shall be installed on the ceiling and connected by means of a capillary tube.

The Capillary tube shall terminate at a Ceiling Sampling Point specifically designed and approved by the manufacturer. The performance characteristics of the Sampling Points shall be taken into account during the system design.

6.6.14 Air Sampling Pipe Network Calculations

Air Sampling Pipe Network Calculations shall be provided by a sampling pipe aspiration modelling program such as Pipe Flow. Pipe network calculations shall be supplied with the proposed pipe layout design.

6.6.15 Transport Time

The manufacturers recommended transport time (time taken for the smoke to enter the pipe and reach the detector) for the least favorable sampling point is 120 seconds or less.

6.7 Photo Electric / Optical Type Smoke Detector

6.7.1 Photo electric/optical type smoke detectors shall work on the principle of light scattering, utilizing a light emitting diode. The sensitivity of the detector shall be preset by the supplier to suit the site conditions.

6.8 UV Flame Detector

6.8.1 UV flame detectors shall work on the principle of a vacuum photodiode tube to detect the UV radiation that is produced by a flame.

6.8.2 UV flame detectors shall react to ultraviolet rays of a flame. The detector shall not be actuated by artificial lights, sunlight incident through a window pane. False alarm check circuit shall be incorporated to prevent false due to intermittent flash or lightning.

6.9 IR Detectors

6.9.1 IR detectors shall work on the principle of a single wavelength infrared flame detector using one of several different photocell types to detect the infrared emissions in a single wave length band that are produced by a flame.

6.9.2 IR detectors shall react to the infrared rays of a flame. It should be sensitive enough to detect smoky fires in which flame is hardly recognizable. The detector should not react to extremely glaring artificial light or direct sunlight. The detector shall be completely solid-state type.

6.10 **Linear Beam Detector**

6.10.1 The linear beam detector shall work on the principle of obscuration of infrared light beam by particles of smoke. The sensitivity shall be such as to enable operation at 30% to 50% obscuration.

6.10.2 Linear beam detector shall consist of separate transmitter and receiver. Linear beam detector shall be suitable for application in high roofed locations such as ware houses etc. The detector shall preferably be powered from the loop signal itself. However if external power supply is required the same shall be explicitly stated by the vendor and the supply shall be supplied from source with battery back-up as specified in clause 4.1.2.

6.11 **Heat Sensing Cables**

VOID

6.12 **Manual Break Glass Boxes**

6.12.1 The break glass box shall be fabricated out of 14 gauge cold rolled sheet steel. Alternately the break glass box may be made of die cast aluminum alloy such as LM6. It shall have IP-55 enclosure and weatherproof construction suitable for outdoor installation. The break glass box shall have a minimum dimension of 100x100x80mm.

6.12.2 The box shall be fabricated in such a way so that it can be mounted, flush to the wall or on the surface without any modification. Two nos. 19mm knock outs shall be provided at the bottom of the box to facilitate the cable/conduit entry. The glass shall cover at least $30cm^2$ area and shall have a thickness not exceeding 2mm.

6.12.3 The break glass box shall have a push button element kept in pressed condition by a glass sheet fitted in the front of the box.

6.12.4 The break glass box enclosure shall be painted with fire red color (shade 536 of IS-5) epoxy painting and an inscription “Break Glass in Case of

Fire", shall be painted in white letters or rivetted on the enclosure by a steel nameplate. A suitable nickel-plated brass hammer, duly chained to the box with stainless steel chain shall be provided with each box for breaking the glass. Each box shall have a distinct identification number boldly painted on it.

6.12.5 If specified in the enquiry documents / data sheets, the break glass box shall have a suitably wired telephone hand set to facilitate communication between the break glass box and the central annunciation panel. In such a case the telephone hand set mounted on hook switch shall be provided in a separate lockable weather proof enclosure.

6.13 **Response Indicator**

6.13.1 If specified in the enquiry documents/data sheets, response indicators shall be provided in a weatherproof box which shall be suitable for wall mounting. The response indicators shall be connected to the detectors directly and shall be complete with terminal blocks suitable to accept cables with up to 2.5 sq.mm. copper conductor. In the normal state of detector, the LED shall flicker, but in the event the detector goes into alarm condition, the LED shall glow steadily. LEDs shall be red in color with 5mm dia as a minimum.

6.13.2 Response indicators shall be employed only in case of non-addressable systems.

6.14 **Exit Signs**

6.14.1 Exit signs shall be fabricated out of 16 gauge cold rolled sheet steel. This shall be suitable for wall mounting or hanging from ceiling.

6.14.2 Fire Exit / No Fire Exit shall be displayed on opposite of the exit sign by means of 5mm dia. Red LEDs or back-lit text. It shall derive power from data gathering cum fire alarm panel and shall operate on DC power supply.

6.15 **Hooters**

6.15.1 The unit shall consist of solid-state circuitry on a printed circuit board, a loudspeaker and a flashing lamp housed in a weatherproof dust tight, wall mounting type enclosure. The hooters shall, at least, have 102db(A) output measured at 1 meter distance. The nit shall derive power from the fire alarm panel and operate on DC power. In the event of fire, the hooter shall raise pulsating audio alarm and the lamp shall flash.

6.16 **Flashing Lights**

6.16.1 The unit shall consist of solid-state circuitry on a printed circuit board and a red caped incandescent lamp and audio unit housed in a dust tight, wall / Ceiling mounting type enclosure. It shall derive power from the data gathering cum fire alarm panel and operate on DC supply.

6.16.2 Flashing lights shall be installed in the enclosed areas where clean agent / CO_2 is to be dumped. In the event a signal for clean agent / CO_2 release is given, the lamp shall start blinking with a warning sound enabling operating personnel to evacuate the area. The audio unit (hooter) shall have 102 dB (A) output measured at 1 meter distance.

6.17 **Clean Agent / CO_2 Release and Inhibit Switches**

6.17.1 This unit shall consist of pull type release and inhibit switches clean agent / CO_2 . The unit shall be fabricated out of 18 gauge cold rolled sheet suitable for wall mounting. Switches shall be pulled to release or inhibit clean agent / CO_2 . Release switches shall have inscription:
"PULL TO RELEASE CLEAN AGENT / CO_2"
And inhibit switches shall have inscription:
"PULL TO RELEASE CLEAN AGENT / CO_2"

6.18 **Zener Barrier**

6.18.1 Zener barriers, located necessarily in unclassified/non-hazardous areas, may be employed for wiring detectors/break glass boxes installed in

hazardous areas. These shall render the circuit beyond the Zener barrier intrinsically safe.

6.18.2 Not more than 10 detectors shall be connected to one Zener barrier. Zener barriers may be located either in the Zonal panel or DGFAP, if permitted by geographic proximity of detectors and zonal panel or DGFAP or may be located close to the detectors / manual call points.

6.18.3 Wherever Zener barriers are provided, in safe area outside the zonal panel or DGFAP, they shall be housed in their own enclosure and shall be dust and vermin proof, weatherproof with IP-55 degree of protection as a minimum.

6.19 **Short Circuit Isolator/Fault Isolator**

6.19.1 Short circuit isolator/Fault isolator shall be installed, if specified in the enquiry document/data sheets.

Fault isolator shall be designed to provide short circuit protection to an analogue addressable detector loop. It shall be possible to wire the fault isolator at any point in the detector loop.

6.19.2 On occurrence of a fault (short circuit), the isolator shall cut power to all devices installed beyond the isolator in the loop.

6.19.3 The fault isolator shall have the capability to continuously check the faulted side of the loop to determine if the fault still exists. On rectification of the fault, the isolator shall automatically reset itself.

6.19.4 In case the fault isolator nearest to the fault does not activate first, the isolator shall query other isolators nearest to the short circuit and then de-activate/restore itself. The restoration shall continue along the loop until only the isolator closest to the fault is left activated.

6.19.5 The DGFAP panel shall be capable of accessing detectors/devices installed outside the zone covered by the fault isolator modules.

6.19.6 Fault isolator modules shall be housed in a dust and vermin proof, weather proof enclosure, with IP-55 degree of protection as a minimum.

6.20 **Sirens**

6.20.1 Sirens shall be industrial type with minimum 2.5km unidirectional range (i.e. 5km diametrical range) against the wind direction.

6.20.2 The decibel level of the siren shall, at least be, 132db(A) at 1 meter, to meet the audibility requirement for the above range. Unless otherwise specified, Sirens shall operate at 240V, 3ph. AC. Sirens shall be housed in weatherproof enclosure and shall be supplied along with direct-on-line starters. Power supply for sirens shall be derived from a source with battery back-up as specified in clause 4.1.2.

7.0 ADDITIONAL REQUIREMENTS FOR FIRE ALARM SYSTEM TO BE INSTALLED IN HAZARDOUS AREA

7.1 In general the CFAP, DGFAPs, Zonal fire alarm panels, mimic panels and repeat alarm panels shall be located in control room environment which is non-hazardous. However, if specified in the enquiry document/data sheets, the enclosure for the detectors, panels and other equipment shall have flameproof construction, conforming to IS-2148 and shall be suitable for installation in hazardous areas classified as Zone-1 and/or Zone-2, with gas group IIB or as specified in the material requisition/data sheet. All equipment for hazardous area installation shall be complete with cable glands as specified in clause 5.4.4.2.

7.2 Equipment's which cannot have flameproof construction shall be intrinsically safe in design and Zener barriers shall be provided to restrict the energy levels.

7.3 For analogue addressable fire alarm systems, manual call points, address interface units, automatic detectors etc. which are to be installed in hazardous area shall preferably have flame proof construction to permit the use of class-A, style-6 fault tolerant wiring as per NFPA-72, without employing T-tapping. As an alternative, intrinsically safe address interface

units, automatic detectors etc. may be permitted provided they are wired beyond Zener barriers, located in non-hazardous area. Fire Alarm Circuit beyond Zener barrier shall be “intrinsically safe” type confirming to IS-5780.

7.4 For conventional fire alarm systems, manual call points, automatic detectors etc. which are to be installed in hazardous area shall preferably have flameproof construction. As an alternative, intrinsically safe automatic detectors may be permitted provided they are wired beyond Zener barriers, located in non-hazardous area and meet the requirements of IS-5780.

7.5 Manual call points shall, however, be in flameproof construction only for either of the above fire alarm systems.

8.0 SPECIFIC REQUIREMENTS FOR INTERFACE WITH CLEAN AGENT / CO_2 RELEASE SYSTEM

8.1 In the case of conventional fire alarm system, clean agent / CO_2 dumping area shall be divided at least into two zones for fire detection purposes. The detectors shall be installed in cross zoning manner. Signals for clean agent / CO_2 release shall be sent only when at least two zones have detected the fire. The blinking lights shall operate in the affected area. Two type of detectors in cross zones shall be provided in each dumping area.

On detection of fire (Min. two detectors), a signal from zonal Fire Alarm Panel shall be generated which shall open the valves for dumping clean agent / CO_2 .

8.2 In the case of analogue addressable fire alarm system, cross-zoning may not be necessary as the system shall be deemed to be capable of filtering out false alarms due to dust, dirt and other atmospheric changes. Signals for clean agent / CO_2 release shall be initiated on receipt of fire alarm from any detector in the protected area. The blinking lights shall operate in the affected area.

8.3 Clean agent / CO_2 can be released or inhibited by the "Clean Agent/ CO_2 " release and inhibit switch located outside the protected area or from the fire alarm panel. The contact for clean agent / CO_2 release alarm shall be taken from the pressure switch provided in the clean agent / CO_2 manifold. Provision in F.A. panel shall be kept to wire pressure switch contacts.

9.0 ENGINEERING REQUIREMENTS

9.1 The vendor shall perform basic and detailed engineering activities, unless specified otherwise in the material requisition/data sheets.

9.1.1 Conventional Fire Alarm System

9.1.1.1 For conventional fire alarm systems basic engineering shall include the development of block-diagram furnished by MECON/Owner.

9.1.1.2 The detailed engineering shall broadly include the preparation of MCP/detector layout drawings, based on MECON/Owner's building / plant layout drawings. Preparation of cable schedules, interconnection drawings, equipment installation drawings, sizing of various equipment such as batteries, battery chargers etc. preparation of G.A. drawings of various equipment.

9.1.2 Analogue Addressable Fire Alarm System

9.1.2.1 For microprocessor based analogue addressable fire alarm systems basic engineering shall include the development of block-diagram, finalizing the requirement of maximum permissible lengths for data highway/detector loops, configuring the central fire alarm panel requirements etc.

9.1.2.2 The detailed engineering shall broadly include the preparation of MCP/detector layout drawings, based on MECON/Owner's building/plant layout drawings. Preparation of cable schedules, interconnection drawings, equipment installation drawings, sizing of various equipment such as batteries, battery charger, UPS etc. allocating addresses to various detectors and defining their sensitivity settings.

10.0 TESTING AND ACCEPTANCE

10.1 During fabrication, panel shall be subject to inspection by MECON/Owner or by any authorized representative, to assess the progress of work. The manufacturer shall furnish all necessary information concerning the supply to MECON/Owner's representative. MECON/Owner's representative shall be given free access in the manufacturer's works from time to time to inspect the progress of the work. Three weeks' notice shall be given by the vendor to MECON/Owner for witnessing the final routine tests of complete assembly to ensure satisfactory working of all components.

10.2 All routine tests as specified by the applicable codes and standards shall be carried out at the manufacturer's work under his care and expense.

10.3 Type test certificates, from a recognized testing organization, shall be furnished along with the bids. Type test certificates for hazardous area equipment shall also be furnished along with the bids.

10.4 Panels shall be tested for functional adequacy, at manufacturers works by simulation of fire/fault condition. Minimum testing shall include tests as specified in IS-2189 or as per the standards prevalent in the country of origin.

10.5 If specified in the enquiry document/data sheets, vendor shall conduct tests at site, after the entire fire alarm system is installed and inter connected by cables. These tests shall establish the operational correctness of the system i.e. all panels, detectors etc. Minimum testing shall include tests as specified at clause 11.2 of IS-2189.

11.0 PACKING AND DESPATCH

11.1 All the equipment shall be divided into several sections for protection and ease of handling during transportation. The equipment shall be properly packed for transportation by ship/rail or trailer. The panel shall be wrapped in polythene sheets before being placed in crates to prevent damage to finish. Crates shall have skid bottom for handling. Special

notations such as ‘Fragile’, ‘This side up’, ‘Centre of gravity’, ‘Weight’ etc. shall be clearly marked on the package together with Tag nos. P.O. Nos. etc.

11.2 The equipment may be stored outdoors for long periods before erection. The packing shall be completely suitable for outdoor storage in areas with heavy rains/high ambient temperature.

Technical Specifications FOR Portable Extinguishers & Fire Fighting Equipment

I. 9 Kg DCP Fire Extinguisher

a) The extinguisher shall conform to IS: 15683-2006.
b) The welding process shall be per IS: 2825 and shall have the certification for every extinguisher.
c) In addition to the IS marking, the following permanent markings by punching at the bottom ring shall be done.

i. Manufacturer's name.
ii. Year of manufacturing.
iii. Manufacturer's serial number.

II. 4.5 Kg CO_2 Fire Extinguisher

a) The CO_2 extinguisher shall conform to the latest IS: 15683-2006 with amendments.

b) The complete assembled / manufactured extinguisher shall be as per IS:15683, and fitted with high pressure wire braided discharge hose of one meter length with horn, wall mounting bracket and carrying handle. The cylinder shall be fully charged with CO_2 Gas., The design, performance of extinguisher, anticorrosive treatment and the painting shall be as per IS.

c) In addition to the IS marking, the following permanent markings by punching at the bottom ring shall be done.

i. Manufacturer's name.
ii. Year of manufacturing.
iii. Manufacturer's serial number.

FIRE & SAFETY EQUIPMENT

i. **Safety Helmet**

The Safety helmet shall be suitable for personal protection against head injuries by falling objects and also for firefighting purposes. Helmet shall have suitable adjustable strap by which it can be secured firmly on the head. The helmet shall be made of HDPE material. Helmet shall be fitted with suitable cushion inside for comfortable wearing. The helmet shall conform to IS-2925-1984 RA2000, and shall bear IS mark on the body. As per purchaser's requirement all the helmets shall be numbered on the front and rear sides. The white in color for the captain and bright yellow for rest of the crewmembers shall be considered.

ii. **Stretcher with Blanket:**

Stretcher suitable for an adult of size approx. 6 feet x 2 feet and made of wooden/MS poles/bars and adult size blanket and other features generally conforming to IS-4037-1967 RA-2001. The canvas shall conform to Variety No. 3 of IS : 1424 –1983 RA2000. The color would be as specified by the purchaser, The carriers shall conform to channels size 80 x 30 mm of IS : 811-1987. Spreader and Runner are manufactured from mild steel strips. The wooden poles shall be given a coat of protective varnish and spray painted to any shade as required by the purchaser. The testing and QA requirements are as per IS.

iii. **Wind shock (Alternating stripes of high visibility orange and white - 15 knots)**

The wind cone assemblies must be designed to operate ambient temperature between -5°C to +55°C and Wind speed up to 15 knots. The fabric windsock must be:

A. made so it takes the shape of a truncated cone (cone with the tip "sliced off") when it is filled with air
B. reinforced at all points that are subject to abrasion by flexing against the metal framework
C. designed to allow removal and replacement without the use of special tools or stitching.
D. constructed to allow water drainage out of the area of the basket assembly

The minimum effective length and the throat end opening diameter, respectively, of the fabric windsock - Eight feet (2.5 m) in length and 18 inches (0.45 m) in throat diameter. Design the taper or the fabric windsock from the throat to the trailing end to cause the windsock to fully extend when exposed to a wind of 15 knots (28 km/hr or 17 mph).

iv. **Hand operated Jet Nozzle with branch pipe.**

Jet nozzles with branch pipes made of gunmetal, suitable to connect with 63 mm dia fire hose with instantaneous coupling and 16 mm dia. nozzle orifice capable of discharging 450 Lpm at 7 Kg/cm2 as per IS: 903 with ISI Mark.

v. **Fog Nozzle.**

Fog nozzle is a type of hand-controlled branch pipe made out of Castings and forging gunmetal chromium plated suitable for 63 mm dia fire hose pipe /female coupling. Fog nozzle shall have arrangements for straight stream, high pressure fog and shut off as per IS:952-1986 RA2000. And the couplings shall be as per IS - 903. The fireman can apply water to a heated surface of fire in the form of fog (fine mist) or jet

The Fog nozzle shall have the marking of manufacturer's name or trade-mark, Year of manufacture and the length of applicator. The Fog nozzle shall also bear the IS mark on the body.

vi. **Universal Nozzle.**

Universal nozzle shall confirm to the IS standard: 2871-1983 RA-2000 and made out of gunmetal / chromium plated suitable for 63 mm dia fire hose with instantaneous coupling as per IS:903-1993 RA-1998 The nozzle shall be capable of giving high-pressure jet and fine water curtain required during firefighting.
The nozzle shall be marked with the manufacturer's name / trademark, year of manufacture and shall bear the IS mark on the body.

vii. **Water Curtain Nozzle.**

Water curtain nozzles made out of gunmetal with chromium plated with 63 mm male instantaneous inlet, suitable for 63 mm dia fire hose with instantaneous couplings as per IS: 903-1993 RA-1998. The nozzle shall be welded with an MS

plate, which is capable of giving water curtain sheet required during firefighting. The MS plate shall be painted black, and the male instantaneous inlet shall be polished. The manufacturer's name / trademark and year of manufacture shall be marked on the nozzle.

viii. **Spray Nozzle**

Portable Nozzles shall be made out of gunmetal with chromium plated with 63 mm male instantaneous inlet, suitable for 63 mm dia fire hose with instantaneous couplings as per IS: 903-1993 RA-1998. The manufacturer's name / trademark and year of manufacture shall be marked on the nozzle.

ix. **Foam Making Branch Pipe.**

The foam making branch pipe for the manual operation as per IS: 2097-1983RA-2000,
For the generation of mechanical foam from the foam compound conforming to IS : 4989-1974 of aqueous film forming foam (AFFF 3%), foam making branch pipe complete with pickup tube and strainer.

The Type shall be FB 5X model barrel shall be made of Leaded tin bronze / Aluminum alloy and having capacity to discharge 225 1pm at 7 Kg/cm2 pressure, with regulating valve and pickup tube, shall be provided in foam making branch. Male Instantaneous inlet shall be of gunmetal. and shall perform to achieve an horizontal throw of 12-15m. The painting shall be of fire red color. The Foam making branch pipe shall have the IS marking on the unit and other details & markings as per IS.

x. **Nozzle Spanner:**

The Nozzle spanner required for the general use of all type's nozzles provided in firefighting, should confirm to IS-903-1993 RA-1998. The performance & test requirements shall be as specified in the IS spec. The nozzle spanner shall be smooth finished and treated for anti-corrosion and chrome plated.

xi. **Sand drum with sand scooper:**

Mild Steel (MS) Sand drum shall be of approximate 200-liter capacity, with a scooper to scoop and throw the sand to the fire base by firemen during firefighting operations. The drum shall be painted as per paint specification by fire red color. The sand scoop shall be made of SS sheet 304 for the sustained life, and paint finished.

xii. **Electrical Hand Gloves (High Voltage):**

Seamless Electrical Hand Gloves Shall Confirm To IS:4770/1991
Material-Latex Rubber
Color- Yellow
Gender-Unisex
Pattern- Plain
Wear Type: Full Fingered

Voltage Resistance - Up to 33KV

xiii. **Electrical Hand Gloves (Low Voltage):**

Seamless Electrical Hand Gloves Shall Confirm To IS:4770/1991
Material-Latex Rubber
Color-Orange
Gender-Unisex
Pattern- Plain
Wear Type: Full Fingered
Voltage Resistance- Up to 650 volts AC.

xiv. **First Aid Box:** *(Kit to be handled by medical / paramedical staff)*

HDPE/ Hard plastic carry case containing the First Aid accessories portable type, compartmentalized storage slots with locking arrangement and containing the required first aids as below:

The expiry of these items shall be at least 18/12 months from the date of supply.

1. First aid for cuts, buns, sprains (instant relief sprays) – 1 each.
2. Antiseptic lotion, liquids (Dettol / Salvon tincture iodine) - 1 bottle
3. Pain relieving medicines, anti-vomiting medicines etc. -2 strips of 10 each.
4. 500 mg Paracetamol I.P - 100 tablets.
5. Anti-snake serum bottle - 2 Nos.
6. Band-Aids - 20 pcs.
7. 25 gms of Soda Bi-Carb. I.P. - 1 pkt.
8. Wound dressing small (for fingers) - 12 pcs.
9. Wound dressing medium (for hands and feet) - 6 pcs.
10. Wound dressing large (for body) - 6 pcs.
11. Burn dressing large (for body) - 6 pcs.
12. Absorbent cotton wool 13 gms each - 6pcs.
13. Dressing instruments (scissors / blade etc.) - 1. set.
14. Eye pad with bandage in separate pkt. - 08 pcs.
15. Tourniquet cotton with belt & buckles. 1 No.
16. Polythene wash bottle 500 c.c. - I. No.
17. Book of instruction on first aid to injured- I. No.

xv. **Rubber Hand Gloves:**

Hand gloves suitable for handling electrical jobs up to 1100 volts type -2 and conforming to IS-4770 –1991 RA-2001 shall be supplied.
The gloves shall be made from best quality natural rubber or synthetic rubber or from a mixture there of. The gloves shall have a smooth finish and the edges shall be finished with a roll or a reinforcing strip of rubber, unless specified otherwise. The size & thickness of the glove as specified in IS. The gloves shall be color coded as Blue for Type 2 application of the rated potential. The gloves shall be marked indelibly at the back with the following information:

a) Size and type of glove;

b) Maximum working potential in volts, followed by the word 'working'
c) Identification mark of manufacture and month and year of manufacture.

xvi. **Fire Proximity Suit:**

The Fire Proximity Suit used for firefighting purposes envisaged in close proximity with the burning oil fire. The suit shall be supplied as per the following specification:

a) Imported fire proximity suit having approval from any of these agencies:
   - U L of USA, U.S. Coast Guard Spec, U.S. Military, NFPA spec,
   - Standards / specifications and the copy of the same shall be submitted along with the offer.

b) The fire suit shall be stitched with imported stainless-steel thread and fabricated from imported impermeable aluminized glass fiber fabric, which shall neither burn nor melt during firefighting operation and along with imported thermal insulation felt lining to sustain very high temperature.
c) Fabric shall not react chemically with water, and shall not absorb oil, grease, petrol etc.
d) The suit shall be flexible, with minimum discomfort fireman shall be able to climb a ladder or to carry running a pressurized hosepipe when he puts on the suit.
e) The fire suit shall consist of detachable chest length drape buttoned head gear with built in industrial helmet and heat reflective dual layer visor, aluminized gloves.
f) The suit shall include hood, coat, pants, boots, mitts/gloves. Metal zip fasteners shall be provided for easy donning and removal of the suit.
g) The size of suit shall be of adjustable such that any adult fireman of height approximately 5'6" to 6'2" can use. The suit must have the provision for keeping the breathing apparatus at the back. The time required for donning the suit shall not be more than 1.5 minutes.
h) High-aluminized boots shall be of standard size with adjustable strap, with proper insulation and leather lining with non-skid type sole.
i) The suit shall protect & sustain against proximity ambient heat up to 260^0 C and the radiant heat up to 1000^0 C .
j) The self-life of the suit shall be around 10-12years.
k) Authorized Indian vendors representing their foreign manufacturer shall have to submit valid authorization certificates from original manufacturer, at the time of submission of offer.

xvii. **Resuscitator:**

Manually operated bag type positive pressure artificial respiration and resuscitation unit of adult size consisting of:

a. Nose, mouth, faceplate, and air bag with oxygen inlet connection, non-return, non-breathing human valve.
b. The bag shall be made of good quality natural rubber. The bag shall be adequately reinforced at the neck of uniform thickness.
c. Metallic parts shall be plated nickel. Chromium.

d. The facemask shall have male conical fittings of the adult size.
e. The inlet shall be provided for connection to an oxygen source.

In accordance of Service, when the bag is pressed, air shall flow to the patient through the valve and the facemask. When the bag is released, the valve shall open towards outside and expiration shall take place with least resistance. Air shall automatically fill in the bag. The valve at any stage shall not stick. The tube shall have an additional arrangement for preventing air to escape into the atmosphere when the bag is squeezed. The Resuscitator shall confirm to IS-6194-1971 RA-2006, shall bear the IS mark. The various parts of the unit shall be packed in a strong/ sturdy carry case. The respirator shall be marked with the manufacturer's name / trademark on the bag.

xviii. **Portable Multi Gas Detector / Explosimeter cum Oxygen Meter**

The Portable Multi Gas detector supplied shall confirm to the following Data sheet:

General	:	4 multi-Gas detector with advanced microprocessor-based operation
Power	:	Rechargeable Nicad / Lithium Polymer standard charge time : 3 hours. Rechargeable choices 110/240v AC line 12 V DC Vehicle, 12/240 V charge cables shall be provided
Diffusion Mode	:	12-16 hours, Continuous Active Sampling Mode : 8-9 hours expected.
Operating Humidity	:	5 to 95% RH non-condensing
Operating Temperature	:	-20^{0} C to $+58^{0}$ C
Full function self-test	:	Automatic when the detector is turned ON.
Battery	:	Continuous type.
PHYSICAL Features	:	Size - 4.2" X 2.4" X 1.4". Weight - Less than 160 gms. Including battery Enclosure Case - Rugged, high impact resistant, non-corrosive composite material Handling: Unit shall be easily attached to the pocket or belt.
Ingress Protection	:	IP 66 / 67
Records & displays	:	On Demand: a) TWA (Time Weighed Average) Exposures b) Peak Exposure Encountered (PEE)
Automatic Calibration	:	Fully Automatic Zero and span
Auto Zero	:	Initiate at any time in the field without gas
Password Security	:	Field selectable access protection to calibration and alarm set points.
Confidence Beep	:	Field selectable operational beep and flashing LED indicator (for every 10 seconds when enabled)
SENSORS	:	Combustible: Plug in catalytic (Toxic & Oxygen) type & Oxygen: Plug-in electrochemical cell
Calibration / and Diagnostics	:	Automatic to give valid calibration with respect to ambience air & gas levels

Operating Specification	***Measuring Range***	***Response Second***	***Detectable accuracy Resolution***	***Operating Temperature Range***
Combustibles	0-100 %LEL	≤ 5	1% LEL	-40 to $+90\,^{o}$C

Oxygen	0-30 % by Vol.	≤ 2	0.1% by Vol	-20 to+50 ºC
Carbon Monoxide	0.500 ppm 0-1000 expandable	≤ 7	1 ppm	-20 to +50 ºC
Hydrogen Sulfide	0-100 ppm	≤ 5	1 ppm	-40 to +50 ºC

DISPLAYS	:	Extra-large gas specific alpha-numeric: LCD around 0.40 inch high.
Alarm Set points	:	Displayed each time the unit is turned ON.
Display Backlight	:	Push Button timed ON. Automatic ON in Alarm Condition.
ALARMS	:	Low and High Gas Alarm Set points, Over-Range Multiple Gas Exposure, Sensor Removed, Calibration Air, Low Battery, Low flow.
Audible	:	90 dB @ 1ft. Variable pulsed beeper.
Visuals	:	a) Two (2) flashing "Sun bright" LEDs b) Gas specific LCD flashes in alarm advising which hazard present. c) ICON Alarm readout advises alarm level present LOW, HIGH and /Or Multiple Gas / Alarms d) Fan ICON indicator.
Alarm Levels	:	Two set points per sensor (User Adjustable) TOXICS - TWA (Low) and Instantaneous High OXYGEN - Deficiency & Enrichment COMBUSTIBLES - Low & High
SAMPLING PUMP	:	Integral Motorized sampling Turbine type pump.
Pump flow Rate	:	300 to 350 ml/min with 10-foot hose and filters (dependent on pump)
Water trap (Built-in)	:	Hydrophobic Teflon field replaceable filter
APPROVALS	:	Certified Intrinsically safe to comply to U.S.& Canadian Standards.
Accessories	:	The following accessories shall be supplied along with the explosimeter: a) A manual aspirator pump with sampling hose / probe b) A motorized pump with sampling hose or probe. c) A Confined space entry kits in a hard sided carrying case. d) Automatic test & calibration and calibration station, that shall have: i. Bump test & calibration instruments in the field without requiring the use of a desk top PC or Laptop be fully portable and available in a variety of portable kit options. ii. Provide simultaneous management of up to 10 instruments docking models iii. Include battery and 110 / 240 V AC line power options. iv. Include software for downloading evaluating archiving and monitoring results.
Authorization	:	Indian vendors, representing their foreign manufacturer shall submit valid Authorization certificates from the original manufacturer to market their product in India.

xix. **Hand Operated Siren (Range - 1.6 KMS)**

The Hand Operated Siren used for firefighting & general purposes shall comply to IS:6026-1985-RA1995.

a) The shape, components, material, design and construction shall comply with IS:6026-1985-RA1995.
b) It shall have Siren body inbuilt disc and handle, guard & portable stand.
c) The Siren shall have a minimum. range of 1.6 Kms.
d) Workmanship
e) The performance test & QAP requirements are as per IS
f) The markings shall have the manufacturers name, trademark, date of manufacture, etc. as per IS.

xx. **Electrical Siren**

The Electrical Siren used for firefighting & general purposes shall be supplied complying to IS: 1941-1976-RA2002 (Part 1)

a) Siren shall consist of Single-phase electric motor, siren head.

b) Starter for on/off operations.

c) Shall match to the Power rating 3 phase, not > 3.75kw, 50Hz, 415 volts.

d) Acoustic power output shall comply with IS.

e) The Siren shall have a minimum range of 3.0 Kms.

f) Siren shall be horizontal mounting type complete with base fittings.

g) The electric motor shall be enclosed totally, with sealed greased ball bearing system and shall conform to IS: 325.

h) The operation controls shall be available both at local point & central locations.

i) The siren shall be clearly and permanently marked with the following information:
    i. Name of manufacturer or trademark if any,
    ii. Type of siren as mentioned under
    iii. Year of manufacture
    iv. Speed of motor
    v. Motor rating in kW.

xxi. **Water Gel Blanket:**

The Water Gel Blanket used during firefighting & rescue operations which is capable for the following applications i.e. to rescue a person trapped in fire by

wrapping the blanket and healing the burnt wounds, Extinguishing the fire and to handle hot material/metal., etc.

The Water Gel Blanket shall be supplied as per the following specification:

a) The outer layer shall be made of 100% woolen intercellular woven blanket presoaked with scientifically formulated therapeutic gel, which can withstand high temperature. The wool carried shall be capable of absorbing up to 13 times its own weight
b) The size of the "Gel-Soaked Blanket" shall be 8 feet x 6 feet.
c) Hydrogel shall be made of water with natural extracts of plants and vegetable with gelling agents. The gel shall be water-soluble and shall be therapeutic, non-toxic, bactericidal and bio-degradable.
d) The gel system should be a combination of an outer layer of wool and absorbed hydrogel.
e) The Water gel Blanket shall be packed in a good quality poly-jar / container
f) . Water gel Blanket shall have minimum life of 5 years.
g) Authorized Indian vendors representing their foreign manufacturer shall have to submit valid authorization certificates from original manufacturer, at the time of submission of offer.

xxii. **Red and Green Flag**

Red and green bright colored flags suitable for the fire drill. Handle shall be made of hard aluminum tube of size not less than 20 mm dia. The edges shall smooth finish and have rubber caps. The flag shall have minimum dimensions of 0.6m x 0.4m. The cloth shall be of thick poly mixed cotton & color shall be bright and long lasting. The flag shall be firmly secured to the handle by the shorter side.

xxiii. **Escape type Self Contained Breathing Apparatus (SCBA) with a spare cylinder**

Breathing apparatus along with fully charged cylinder shall be supplied as per the design requirements and testing procedures as stipulated in IS: 10245 (part-IV)-1982/RA 2002. The equipment shall bear the IS marking. The Open-Circuit Compressed Air, positive pressure, double stage SCBA shall be suitable for fighting fire / fire escape / rescue operation in dangerous dusts, gases, fumes, toxic vapors, and oxygen deficient atmosphere. The equipment consists of compressed air cylinder, light weight, full face wide vision mask (with inner mask), speech diaphragm, spring loaded exhalation valve, L.P. warning whistle, pressure gauge, positive pressure demand valve working on pneumatic pressure, comfortable shoulder harness and light weight chemical resistant back plate to accommodate cylinder. The hoses are made from Neoprene Rubber/steel braided. The facility of automatic cut-off of the airflow up on disconnection of the reducer should be available. The cylinder shall have the approval by Chief Controller of Explosives (CCOE).

<u>An additional charged (spare) cylinder shall be included along with the main equipment</u>

xxiv. **Flame proof search light - Rechargeable type suitable for Explosive Environment.**

Flame proof search light shall be suitable for Explosive Environment. Body of the Search Light shall be Aluminum/Fiber (Flameproof) with LED lights and Built-in Battery of Min. 4500 mAh li-ion battery. IP rating of the light shall be min. IP66. Search Light shall be rechargeable type with 230 V AC supply. Suitable Charger to be provided with the Lamp. Heavy Duty Fabric Pouch with Belt Loop shall be provided with the Search Light. The Light shall be PESO approved. Provision of 3 brightness settings: strong, standard, SOS with Lamp Luminous Flux of min. 1000 lm shall be given in the light.

xxv. **Hand held Portable Public address (PA) System:**

To address the terminal personnel during emergency, and for the purpose of general addressing of the public a small Public Address System shall be provided in the terminal.

a) The system shall have a microphone, mixer-amplifier unit and loudspeaker. The Power output shall be in the range of 200 watts. The range to be address is up to 150 meters. Suitable long-lasting NI-cad battery backup shall be provided.
b) The PA system shall be of portable & lightweight type, capable of carried easily by any person. and shall have the carrying bag hung on the shoulder. hand carried & battery power operated. The system shall consist of compartmentalized carry case to be carried by a person at ease. The carry case shall be hard enough to hold the components of the PA system.
c) Mega Phone Ex-Proof - Portable battery-operated PA System with 1 loud speaker with a range of 1 KM in still air and 500 M in noisy areas.

xxvi. **Trolley (General Purpose):**

In order to carry the following fire & safety equipment to the place of emergency, a trolley shall be provided to carry the following items:

i. Stretcher with Blanket
ii. Fire Proximity Suit
iii. Breathing Apparatus
iv. Water Gel Blanket
v. Resuscitator
vi. First Aid Box
vii. Explosimeter(Gas Detector)
viii. Portable Public address (PA) System
ix. Foam Making Branch pipes
x. Special Purpose Nozzles.
xi. Spare Fire Hoses.

The trolley shall be fabricated by using MS channels & angles. The body frame shall be minimum size of 6.0’x 3.0’ (feet x feet) Supplier can also indicate different suitable size for the trolley. The compartments shall be fabricated type by using MS sheets and MS tubes or angles. The compartments shall be sufficient enough to carry all the above items at one go at any point of time. The inflated tyre & tube

wheels assembly unit shall be fitted to the trolley to pull & push manually or by towing vehicle. For this purpose the handle and hook arrangement shall be made. The painting shall be as per painting spec. and shade shall be fire red color.

xxvii. **Spark Arrestor - PESO approved**

Spark Arrestor shall be Carbon Steel - Outer body, inlet and out let and ash box with cover, heavy gauge sheets - - CRCA & Aluminum - LM 4 internal with designed for 3 D vanes. All the CS parts are thoroughly powder coated in and out with heat resistant paint.

xxviii. **Eye Wash Shower (Stainless Steel)**

- Eye Wash shower shall be hand & pedestal operated along with supply & laying of required GI Heavy Pipes, fittings Isolation valves. Stainless Steel Shower cum Eyewash hand operated. Material Construction: Shower Head: SS 304
- Eye wash basin: SS 304
- Atomizer Unit: SS 304 consisting of twin cushion flow Automizer with Automatic pressure compensators.
- Pipe and pipe fittings: SS 304
- Ball valve: 1/2" full port spring loaded ball valve operated by push plate pull rod. SS 304 1" full port stays open ball valve Operated by pull rod: SS 304
- Floor Flange: 8" dia standard SS 304
- Floor flange Foot pedal: SS 304
- Recommended water Pressure for Shower: 2 kg/cm2 at a flow of 110 LPM & for Eye Wash: 2 kg/cm2 at a flow of 28 LPM.

xxix. **Human body Static Dissipator**

- Human body Static Dissipator shall be grounding palm plate which shall be convenient and quick solution for ensuring that there is no charge on the human body before entering any ESD safe area.
- It shall have conductive stainless steel electrode plate mounted on to an acrylic backing.
- The plate can be mounted on the wall at a convenient height and the personnel have to just touch the plate to drain any charge from the body.
- This Static Discharge Palm Plate shall be supplied with a grounding cord which needs to be connected to any ESD earth point.
- A 2.2 MΩ resistor to be provided in the ground cord as precaution against risk of shock.

xxx. **Fire men's axe**

Fireman's axe covered by this standard shall be provided with insulated steel handle as per IS : 926 – 1985. Steel used in the forging of axe head shall comply with IS : 926 – 1985. Steel used for axe handle shall conform to IS : 1977~ 1975 with vulcanized rubber capable of withstanding an insulation test. Handle grip shall be of non-slippery type, that is, provided with a knurled surface.

xxxi. **Safety Goggles**

Safety Goggles shall be provided with Optical class 1 lens for prolonged use, Wide adjustable strap for comfortable fit, pivoting ratchet for individual adjustment and fit, Indirect ventilation to improve air circulation and reduce fogging in hot/humid conditions, Additional protection against gas and fine particles and can be worn over prescription spectacles.

xxxii. **NON-SPARKING TOOLS**

The scope of the tender includes, but not limited to the following activities

a. Supply of Non-Sparking, Non-Ferrous, Non-Magnetic, Corrosion Resistant material Tools at Project site.
b. Providing material safety data sheet (MSDS) containing composition information, toxicology information, carcinogen classification, hazardous identification, first aid measures etc.
c. Testing and Inspection of Tools.
d. Packing and Transportation of Tools to the project site
e. Test certificates to be provided for:-
    1. Qualification test which includes Magnetic Permeability test
    2. Quality Conformance inspection
    3. Hardness and Elongation test
    4. Sparking test
f. Making arrangements to avoid any damages to the material while loading, transportation, unloading. (Any damaged Tool will not be accepted).

A. TECHNICAL SPECIFICATIONS FOR NON-SPARKING TOOLS -

a). Supply of Non-Sparking, Non-Ferrous, Non-Magnetic, Corrosion Resistant material.
b). Shape, size and dimensions should comply with SAE, ANSI or ASME B 18.2.2(latest) or BIS or equivalent standard.
c). Certificate of compliance be submitted along with tender bid.
d). Material Safety Data Sheet (MSDS) containing composition information, toxicology information, carcinogen classification, hazardous identification, first aid measures etc. to be submitted along with tender bid.

e). Test Certificates to be provided for: a) Qualification test which include Magnetic Permeability test b) Quality Conformance inspection c) Hardness and Elongation test d) Sparking test.

F). Non-Sparking tools should conform to BIS standard for non-sparking tools ie, IS 4595 1969 and should surpass torque test as per IS 61311980(RA-2003)7. Durable, easy to carry and lockable tool box to be provided along with the tools.

g). All certificates mentioned under "Specifications of Non-Sparking Tools" to be submitted along with the consignment.

h). Mechanical Properties of typical Copper Titanium alloy & compliant to IS 4595 - 1969 Non-Sparking Metal will be as follows:

Non-sparking tools should be suitable for use in potentially explosive environments. These tools should be of good workmanship and should be provided without coating of any kind. The tools should be ergonomically designed to make operation easier, comfortable and fast. Non-sparking tools should be free from any Beryllium hazard.

The tools should be made from DRDO approved copper titanium alloy have the following composition & hardness:

(i) Copper should be 95% to 96%
(ii) Titanium should be 4-5%
(iii) Hardness: 240HV to 350HV
(iv) Magnetic: Tools should be completely non-magnetic
(v) Corrosion Resistance: Tools should be Corrosion resistant
(vi) Electrical conductivity (IACS):17-25
(vii) Yield strength: 880-1150
(viii) Tensile strength: 1000-1250
(ix) Elongation (%): (1-2%)

i). Tools should be tested as per IS-4595 and report from CSIR-Central Institute of Mining and Fuel Research should be provided. Following will be required along with bid submission:

1. DRDO authorization that manufacturer has received technology transfer from them
2. Authorization from manufacturer
3. Performance report of tools supplied to earlier PSUs

At the time of supply Proof loads which states that the heads of the wrenches or the striking areas of the tool shall withstand the proof load without permanent deformation, formation of cracks or fracture of the heads or the handles. Torque testing reports to be provided at the time of supply, bidder to give confirmation of the same at the time of bid submission.

B. CODES & STANDARDS